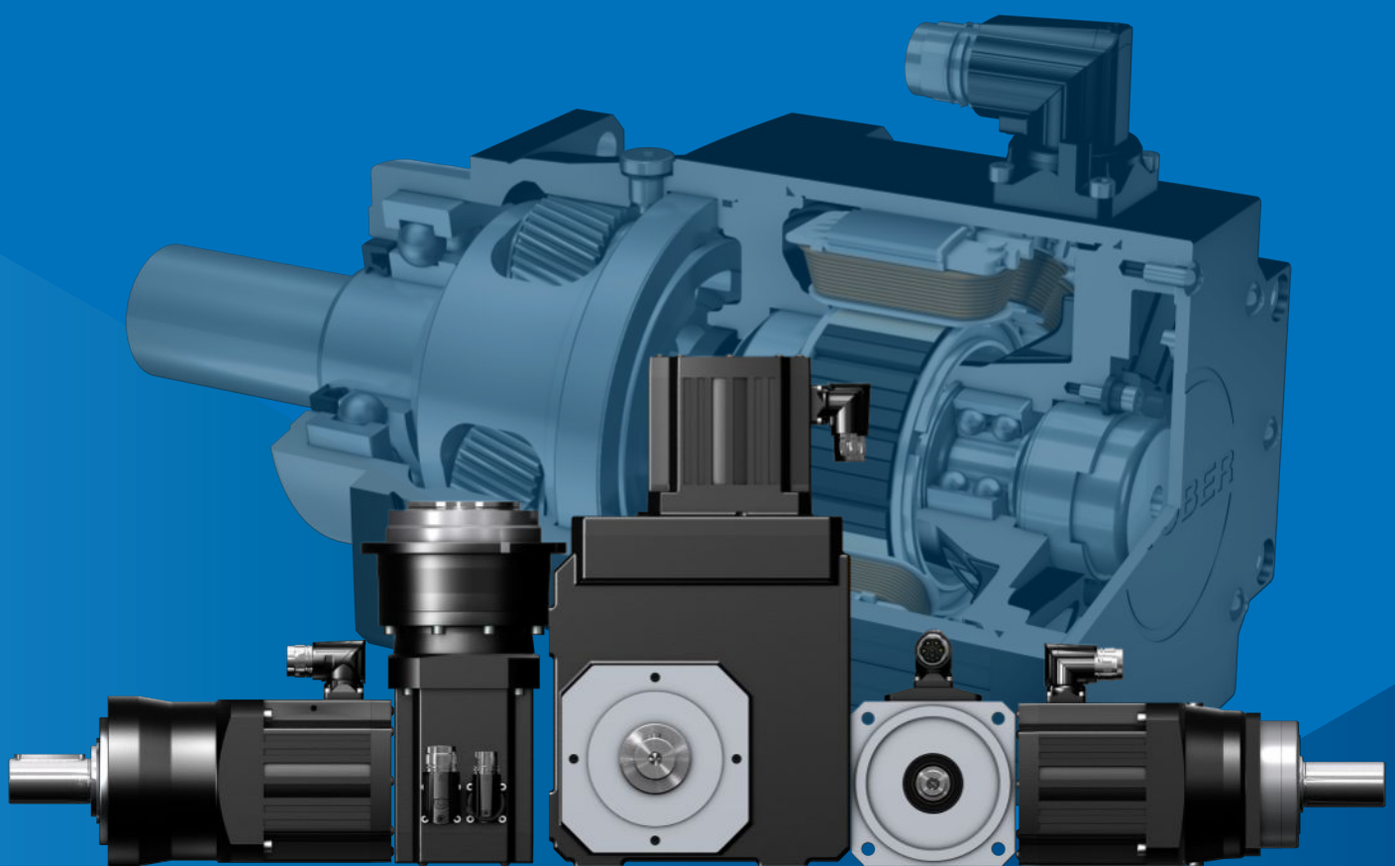

Synchronous servo geared motors

STÖBER

Synchronous servo geared motors

One partner. All the possibilities.

STOBER has developed and produced excellent drive technology since 1934 and is active internationally with around 1000 employees at 14 locations. STOBER impresses machine manufacturers in wide-ranging industries and markets around the world with tailor-made, highly efficient drive systems for demanding movements.

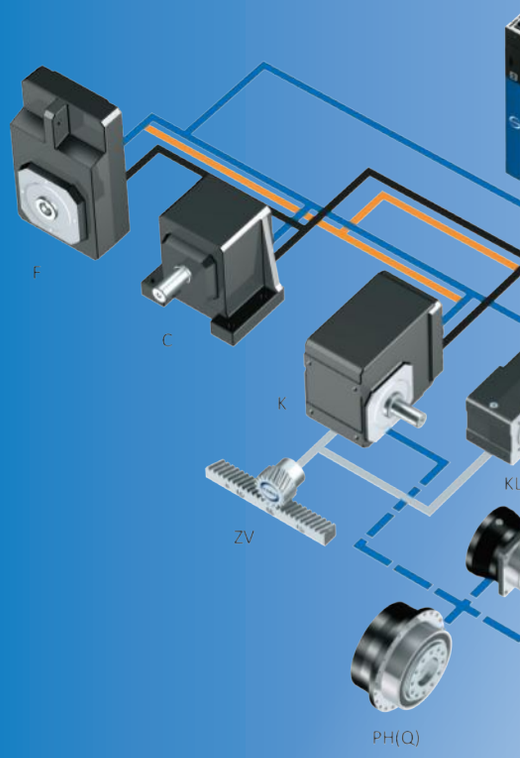



"Together with our customers, we achieve perfect motion in a wide variety of applications with our precisely coordinated system. Whenever precision, dynamics and quality are required, we are at your side as a reliable partner."

Rainer Wegener, Chief Executive Officer, STÖBER Antriebstechnik





Synchronous servo geared motors – what you can expect!

Power density redefined! Learn more about our powerhouses: STOBER synchronous servo motors of the EZ series. You will be convinced of the latest servo technology for screw drives. They are extra dynamic and efficient in direct attachment with precise, high-performing STOBER servo gearboxes. It's impossible to be more compact.

At home in the world of demanding motion

Gearboxes

Geared motors

Motors

Cables and drive controllers

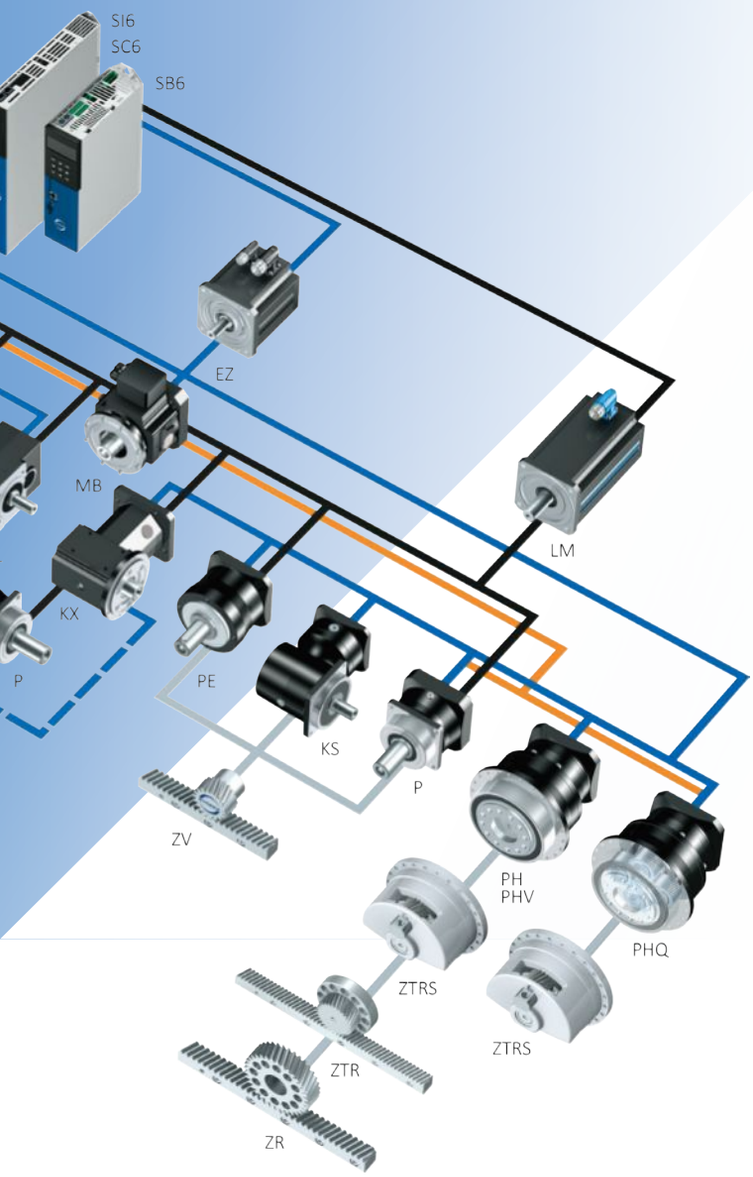

Everything from a single source.

The STOBER drive system consisting of gearboxes, motors, cables and drive controllers has a modular design and is freely scalable—for tailor-made, compact and powerful machine concepts. It can be adapted to your individual requirements and combined as needed in nearly all industries and applications areas.

We check every single component and how it works together with others, taking on the responsibility for the complete drive train. For you, this means that one contact partner, certified operating safety and maximum availability are guaranteed.

Need special solutions?

Numerous one-of-a-kind product highlights and project-related adjustments make it possible. With a holistic approach to your specific task, we work together on individualized solutions that are optimally co-ordinated to your requirements. Dedicated and solution-oriented in the support of your visions and projects.

STOBER moves integrally and precisely.



"Versatile products, countless possibilities. Your perfect motion is what drives us!"

Markus Graf, Chief Sales Officer, STÖBER Antriebstechnik



STOBER moves as a team and with personality.

As a family-owned company, it is very important to us to maintain close relationships and treat each other with trust. We put people first.

We are committed to the well-being of our employees, identify with the expectations of our customers, and show personal commitment to mutual success.





"We have installed gearboxes, motors and drive controllers from STOBER in nearly all our systems. STOBER supports us in new projects from the first stroke of a pencil in the design phase until commissioning. Our years of cooperation are shaped by openness and honesty and emanate a rather special spirit. The technical consulting, the support—that is real, experienced partnership"

Jürgen Leicht, Managing Partner of Leicht Stanzautomation





Working together. Worldwide. Successfully.

With an eye to the future, STOBER is facing the challenges of digitalization and investing in integrated solutions and a strong global presence in production, sales and service. STOBER China was founded at the end of 2019. As a result, we are present in more than 40 countries around in the world at 12 locations and with 80 service partners.



STOBER drives
Systems technology
Taicang, China.



Table of contents

1 Selection tool 9

2 P planetary geared motors 15

3 PH planetary geared motors 47

4 PHQ planetary geared motors 71

5 PHV planetary geared motors 95

6 PE planetary geared motors 109

7 C helical geared motors 127

8 F offset helical geared motors 185

9 KS right-angle servo geared motors 233

10 PKX right-angle planetary geared motors 265

11 PK right-angle planetary geared motors 301

12 PHKX right-angle planetary geared motors 335

13 PHK right-angle planetary geared motors 365

14 PHQK right-angle planetary geared motors 397

15 KL helical bevel geared motors 427

16 K helical bevel geared motors 465

17 EZ synchronous servo motors 559

18 Connecting to drive controllers of third-party manufacturers 603

19 Close to customers around the world 632

20 Appendix 633

1 Selection tool

1.1 Inline and Offset Geared Motors

				
Product chapter	**P**	**PE**	**C**	**F**
Chapter number	[2]	[6]	[7]	[8]
Technical data				
i	3 – 100	3 – 50	2 – 270	4.3 – 440
M_{2acc}	10 – 3450 Nm	5.7 – 250 Nm	9.7 – 6500 Nm	21 – 1100 Nm
$\Delta\phi_2$	1 – 8 arcmin	8 – 13 arcmin	10 – 20 arcmin	5 – 11 arcmin
η_{get}	95 – 97 %	95 – 97 %	96 – 97 %	96 – 97 %

An explanation of the formula symbols can be found in Chapter [20.1].

Features				
Power density	★★★★☆	★★★☆☆	★☆☆☆☆	★☆☆☆☆
Backlash	★★★★★	★★★☆☆	★★☆☆☆	★★★☆☆
Price category	€€	€	€	€
Shaft load	★★★★☆	★★☆☆☆	★★☆☆☆	★★★☆☆
Smooth operation	★★★★☆	★★★☆☆	★★★☆☆	★★★☆☆
Torsional stiffness	★★★☆☆	★★★☆☆	★★☆☆☆	★★☆☆☆
Mass moment of inertia	★★★★★	★★★★★	★★★★★	★★★★★
Key	★☆☆☆☆ good | ★★★★★ excellent € Economy | €€€€€ Premium			
Shaft design				
Solid shaft with feather key	✓	✓	✓	✓
Solid shaft without feather key	✓		C0 – C5: ✓ Starting at C6: Request	✓
Hollow shaft with keyway				✓
Hollow shaft with shrink ring				✓
Bearing design				
Standard	✓	✓	✓	✓
Axially reinforced	✓			
Radially reinforced	✓			
Maintenance-free	✓	✓	C0 – C5: ✓	✓

1 Selection tool

1.1 Inline and Offset Geared Motors







Product chapter	PH	PHQ	PHV
Chapter number	[▶ 3]	[4]	[▶ 5]

Technical data

i	4 – 100	5.5 – 600	61 – 121
M_{2acc}	24 – 7500 Nm	72 – 22000 Nm	1638 – 7500 Nm
$\Delta\phi_2$	1 – 4 arcmin	1 – 3 arcmin	1 – 3 arcmin
η_{get}	93 – 96 %	90 – 96 %	90 %

An explanation of the formula symbols can be found in Chapter [▶ 20.1].

Features

Power density	★★★★☆	★★★★★	★★★★☆
Backlash	★★★★★	★★★★★	★★★★☆
Price category	€€€	€€€€	€€€
Shaft load	★★★★★	★★★★★	★★★★★
Smooth operation	★★★★☆	★★★★☆	★★★★☆
Torsional stiffness	★★★★☆	★★★★★	★★★★☆
Mass moment of inertia	★★★★★	★★★★★	★★★★★
Key	★☆☆☆☆ good | ★★★★★ excellent € Economy | €€€€€ Premium		
Shaft design			
Flange shaft	✓	✓	✓
Bearing design			
Standard	✓	✓	✓
Reinforced	✓ (PH3 – PH5)	✓ (PHQ4 – PHQ5)	
Maintenance-free	✓	✓	✓

1 Selection tool

1.2 Right-angle geared motors

			
Product chapter	**KS**	**PKX**	**PK**
Chapter number	[▶ 9]	[10]	[▶ 11]

Technical data

i	2 – 100	3 – 300	12 – 555
M_{2acc}	9.7 – 400 Nm	11 – 3300 Nm	68 – 3105 Nm
$\Delta\phi_2$	3 – 7 arcmin	2 – 8.5 arcmin	1.5 – 5 arcmin
η_{get}	93 – 97 %	94 – 96 %	94 %

An explanation of the formula symbols can be found in Chapter [▶ 20.1].

Features

Power density	★★★☆☆	★★★★☆	★★★☆☆
Backlash	★★★☆☆	★★★★★	★★★★★
Price category	€€€	€€€	€€€
Shaft load	★★★★★	★★★★☆	★★★★☆
Smooth operation	★★★★☆	★★☆☆☆	★★★☆☆
Torsional stiffness	★★★☆☆	★★★☆☆	★★★☆☆
Mass moment of inertia	★★★★★	★★★☆☆	★★★★★
Key	★☆☆☆☆ good | ★★★★★ excellent € Economy | €€€€€ Premium		
Shaft design			
Solid shaft with feather key	✓	✓	✓
Solid shaft without feather key	✓	✓	✓
Hollow shaft with shrink ring	✓		
Flange hollow shaft	✓		
Bearing design			
Standard	✓	✓	✓
Axially reinforced		✓	✓
Radially reinforced		✓	✓
Maintenance-free	✓	✓	✓

1 Selection tool

1.2 Right-angle geared motors

				
Product chapter	**KS**	**PHKX**	**PHK**	**PHQK**
Chapter number	[▷ 9]	[12]	[▷ 13]	[14]
Technical data				
i	2 – 100	4 – 210	16 – 555	22 – 2242
M_{2acc}	9.7 – 400 Nm	26 – 6975 Nm	89 – 7500 Nm	123 – 43000 Nm
$\Delta\phi_2$	3 – 7 arcmin	1 – 6 arcmin	1.5 – 4.5 arcmin	1.5 – 4 arcmin
η_{get}	93 – 97 %	92 – 95 %	92 – 93 %	90 – 93 %

An explanation of the formula symbols can be found in Chapter [▷ 20.1].

Features				
Power density	★★★☆☆	★★★★★	★★★★☆	★★★★★
Backlash	★★★☆☆	★★★★★	★★★★★	★★★★★
Price category	€€€	€€€€	€€€€	€€€€€
Shaft load	★★★★★	★★★★★	★★★★★	★★★★★
Smooth operation	★★★★☆	★★☆☆☆	★★★☆☆	★★★☆☆
Torsional stiffness	★★★☆☆	★★★★☆	★★★★☆	★★★★★
Mass moment of inertia	★★★★★	★★★☆☆	★★★★★	★★★★★
Key	★☆☆☆☆ good | ★★★★★ excellent € Economy | €€€€€ Premium			
Shaft design				
Solid shaft with feather key	✓			
Solid shaft without feather key	✓			
Hollow shaft with shrink ring	✓			
Flange hollow shaft	✓			
Flange shaft		✓	✓	✓
Bearing design				
Standard	✓	✓	✓	✓
Reinforced		✓ (PH3 – PH5)	✓ (PH5)	✓ (PHQ5)
Maintenance-free	✓	✓	✓	✓

1 Selection tool

1.2 Right-angle geared motors





Product chapter	KL	K
Chapter number	[▶ 15]	[▶ 16]

Technical data

i	4 – 32	4 – 381
M_{2acc}	10 – 65 Nm	23 – 12750 Nm
$\Delta\phi_2$	16 – 25 arcmin	1.5 – 12 arcmin
η_{get}	97 %	94 – 97 %

An explanation of the formula symbols can be found in Chapter [▶ 20.1].

Features

Power density	★★☆☆☆	★★☆☆☆
Backlash	★☆☆☆☆	★★★☆☆
Price category	€	€€
Shaft load	★★☆☆☆	★★★☆☆
Smooth operation	★★☆☆☆	★★★☆☆
Torsional stiffness	★★☆☆☆	★★☆☆☆
Mass moment of inertia	★★★★★	★★★★★
Key	★☆☆☆☆ good | ★★★★★ excellent € Economy | €€€€€ Premium	
Shaft design		
Solid shaft with feather key	✓	✓
Solid shaft without feather key	✓	K1 – K4: ✓ Starting at K5: Request
Solid shaft on both sides	✓	✓
Hollow shaft with keyway	✓	✓
Hollow shaft with shrink ring	✓	✓
Accessories		
Flange	✓	✓
Foot plates	✓	✓
Torque arm bracket	KL2: ✓	✓
Bearing design		
Standard	✓	✓
Maintenance-free	✓	K1 – K4: ✓

1 Selection tool

1.3 Synchronous servo motors



Product chapter	EZ
Chapter number	[▶ 17]

Technical data

M_N	0.4 – 91 Nm
M_0	0.44 – 100 Nm

An explanation of the formula symbols can be found in Chapter [▶ 20.1].

Shaft design	
Solid shaft without feather key	✓
Encoder	
EnDat 3 One Cable Solution (OCS)	✓
EnDat 2.2	✓
EnDat 2.1	✓
Resolvers	✓
Cooling	
Convection cooling	✓
Forced ventilation	✓
Brake	
Permanent magnet holding brake	✓
Marks and test symbols	
CE	✓
cURus	✓
UKCA	✓

2 P planetary geared motors

Table of contents

2.1 Overview 16

2.2 Selection tables 17

2.3 Dimensional drawings 31

2.3.1 G shaft design (solid shaft without feather key) 32

2.3.2 P shaft design (solid shaft with feather key) 34

2.4 Type designation 36

2.5 Product description 36

2.5.1 Input options 36

2.5.2 Installation conditions 37

2.5.3 Lubricants 37

2.5.4 Position of the plug connectors 37

2.5.5 Other product features 38

2.5.6 Direction of rotation 38

2.6 Project configuration 38

2.6.1 Drive selection 39

2.6.2 Permitted shaft loads for the output shaft 43

2.6.3 Recommendation for radial shaft seal rings 45

2.6.4 Reverse operation 46

2.7 Additional documentation 46

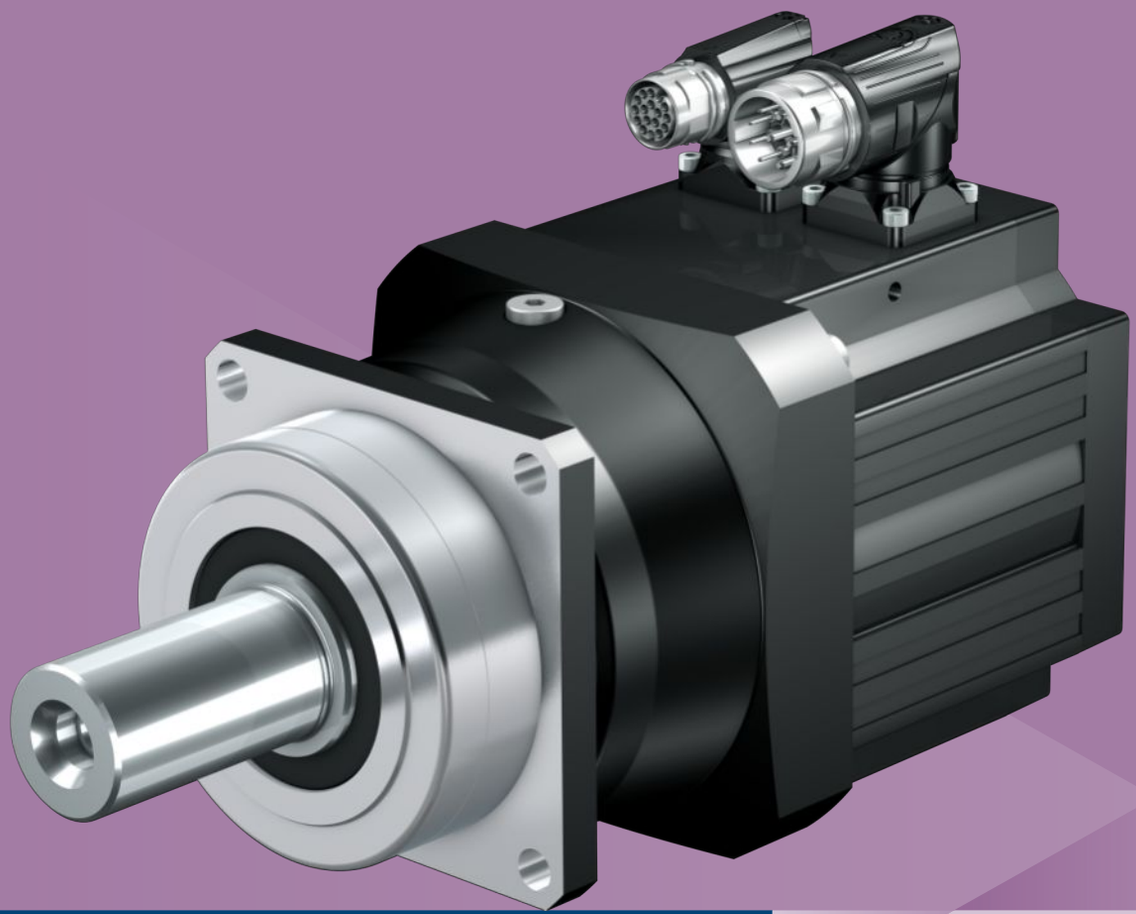

2 Planetary geared motors P

2.1 Overview

Helical-geared precision planetary geared motors

Features

Power density	★★★★☆
Backlash	★★★★★
Price category	€€
Shaft load	★★★★☆
Smooth operation	★★★★☆
Torsional stiffness	★★★☆☆
Mass moment of inertia	★★★★★
Helical gearing	✓
Maintenance-free	✓
Any mounting position	✓
Continuous operation without cooling	✓
Reinforced output bearing	✓ (optional)
Compact and highly dynamic due to direct motor attachment	✓

Key ★☆☆☆☆ good | ★★★★★ excellent
€ Economy | €€€€€ Premium

Technical data

i	3 – 100
M_{2acc}	10 – 3450 Nm
$\Delta\phi_2$	1 – 8 arcmin
η_{get}	95 – 97 %

2.2 Selection tables

The technical data specified in the selection tables applies to:

- Installation altitudes up to 1000 m above sea level
- Surrounding temperatures from 0 °C to 40 °C
- Drives with convection-cooled motors (e.g. EZ401**U**)
- M_{2acc}, M_{2accHT}: Solid shaft design without feather key (we generally recommend this shaft design for cyclic operation)

For the technical data on drives with forced ventilated motors (e.g. EZ401**B**), refer to https://configurator.stoeber.de/en-US/.

An explanation of the formula symbols can be found in Chapter [▷ 20.1].

n_{2N} [rpm]	M_{2N} [Nm]	$M_{2,0}$ [Nm]	a_{th}	S	Type	M_{2acc} [Nm]	M_{2accHT} [Nm]	M_{2NOT} [Nm]	i	i_{exakt}	n_{1maxDB} [rpm]	n_{1maxZB} [rpm]	J_1 [kgcm²]	$\Delta\varphi_2$ [arcmin]	$\Delta\varphi_{2red}$ [arcmin]	C_2 [Nm/ arcmin]	m [kg]
P2 (n_{1N} = 3000 min^{-1}, $M_{2acc,max}$ = 25 Nm)																	
188	14	14	5.8	1.1	P232_0160 EZ301U	24	–	48	16.00	16/1	6000	8000	0.23	8.0	–	1.8	2.9
300	9.0	9.2	1.1	1.1	P231_0100 EZ301U	21	–	41	10.00	10/1	6000	8000	0.20	6.0	–	1.6	2.3
375	7.2	7.4	1.2	1.7	P231_0080 EZ301U	21	–	41	8.000	8/1	6000	8000	0.20	6.0	–	1.7	2.3
429	6.3	6.5	1.3	2.1	P231_0070 EZ301U	19	–	46	7.000	7/1	6000	8000	0.20	6.0	–	1.8	2.3
429	11	11	2.2	1.3	P231_0070 EZ302U	23	–	46	7.000	7/1	6000	8000	0.30	6.0	–	1.8	2.9
600	4.5	4.6	1.9	3.0	P231_0050 EZ301U	14	–	51	5.000	5/1	6000	8000	0.22	6.0	–	1.9	2.3
600	7.7	8.1	3.3	1.8	P231_0050 EZ302U	24	–	51	5.000	5/1	6000	8000	0.32	6.0	–	1.9	2.9
600	10	11	4.3	1.3	P231_0050 EZ303U	25	–	51	5.000	5/1	6000	8000	0.43	6.0	–	1.9	3.4
750	3.6	3.7	2.5	3.7	P231_0040 EZ301U	11	–	51	4.000	4/1	6000	8000	0.24	6.0	–	1.9	2.3
750	6.2	6.5	4.3	2.2	P231_0040 EZ302U	19	–	51	4.000	4/1	6000	8000	0.34	6.0	–	1.9	2.9
750	8.0	8.5	5.6	1.7	P231_0040 EZ303U	25	–	51	4.000	4/1	6000	8000	0.45	6.0	–	1.9	3.4
P2 (n_{1N} = 6000 min^{-1}, $M_{2acc,max}$ = 25 Nm)																	
171	13	15	1.9	1.0	P232_0350 EZ202U	25	–	51	35.00	35/1	6000	8000	0.14	8.0	–	1.8	2.8
188	12	13	2.1	1.1	P232_0320 EZ202U	21	–	41	32.00	32/1	6000	8000	0.17	8.0	–	1.7	2.8
214	11	12	2.3	1.2	P232_0280 EZ202U	24	–	48	28.00	28/1	6000	8000	0.14	8.0	–	1.8	2.8
240	9.5	10	2.4	1.4	P232_0250 EZ202U	25	–	51	25.00	25/1	6000	8000	0.15	8.0	–	1.8	2.8
300	7.6	8.4	2.7	1.7	P232_0200 EZ202U	25	–	51	20.00	20/1	6000	8000	0.17	8.0	–	1.8	2.8
300	12	13	4.1	1.1	P232_0200 EZ203U	25	–	51	20.00	20/1	6000	8000	0.21	8.0	–	1.8	3.0
375	6.1	6.7	3.0	2.2	P232_0160 EZ202U	22	–	48	16.00	16/1	6000	8000	0.17	8.0	–	1.8	2.8
375	9.3	10	4.6	1.4	P232_0160 EZ203U	24	–	48	16.00	16/1	6000	8000	0.21	8.0	–	1.8	3.0
600	3.9	4.3	0.6	2.1	P231_0100 EZ202U	14	–	41	10.00	10/1	6000	8000	0.13	6.0	–	1.6	2.2
600	5.9	6.7	0.9	1.4	P231_0100 EZ203U	21	–	41	10.00	10/1	6000	8000	0.17	6.0	–	1.6	2.5
750	3.1	3.4	0.7	3.0	P231_0080 EZ202U	11	–	41	8.000	8/1	6000	8000	0.14	6.0	–	1.7	2.2
750	4.7	5.4	1.0	2.0	P231_0080 EZ203U	21	–	41	8.000	8/1	6000	8000	0.18	6.0	–	1.7	2.5
750	6.9	7.4	1.5	1.4	P231_0080 EZ301U	21	–	41	8.000	8/1	6000	8000	0.20	6.0	–	1.7	2.3
857	2.7	3.0	0.7	3.9	P231_0070 EZ202U	10	–	46	7.000	7/1	6000	8000	0.14	6.0	–	1.8	2.2
857	4.1	4.7	1.1	2.6	P231_0070 EZ203U	18	–	46	7.000	7/1	6000	8000	0.18	6.0	–	1.8	2.5
857	6.0	6.5	1.6	1.8	P231_0070 EZ301U	19	–	46	7.000	7/1	6000	8000	0.20	6.0	–	1.8	2.3
857	10	11	2.6	1.1	P231_0070 EZ302U	23	–	46	7.000	7/1	6000	8000	0.30	6.0	–	1.8	2.9
1200	3.0	3.3	1.6	3.6	P231_0050 EZ203U	13	–	51	5.000	5/1	6000	8000	0.20	6.0	–	1.9	2.5
1200	4.3	4.6	2.3	2.5	P231_0050 EZ301U	14	–	51	5.000	5/1	6000	8000	0.22	6.0	–	1.9	2.3
1200	7.3	8.1	3.9	1.5	P231_0050 EZ302U	24	–	51	5.000	5/1	6000	8000	0.32	6.0	–	1.9	2.9
1200	9.5	11	5.1	1.1	P231_0050 EZ303U	25	–	51	5.000	5/1	6000	8000	0.43	6.0	–	1.9	3.4
1500	2.4	2.7	2.1	4.5	P231_0040 EZ203U	10	–	51	4.000	4/1	6000	8000	0.21	6.0	–	1.9	2.5
1500	3.5	3.7	3.0	3.1	P231_0040 EZ301U	11	–	51	4.000	4/1	6000	8000	0.24	6.0	–	1.9	2.3
1500	5.8	6.5	5.1	1.8	P231_0040 EZ302U	19	–	51	4.000	4/1	6000	8000	0.34	6.0	–	1.9	2.9
1500	7.6	8.7	6.7	1.4	P231_0040 EZ303U	25	–	51	4.000	4/1	6000	8000	0.45	6.0	–	1.9	3.4
P3 (n_{1N} = 3000 min^{-1}, $M_{2acc,max}$ = 75 Nm)																	
60	44	45	1.2	1.1	P332_0500 EZ301U	75	75	150	50.00	50/1	6000	8000	0.20	5.0	3.0	5.0	3.4
75	35	36	1.6	1.2	P332_0400 EZ301U	65	65	130	40.00	40/1	6000	8000	0.20	5.0	3.0	4.8	3.4
86	31	32	1.4	1.6	P332_0350 EZ301U	75	75	150	35.00	35/1	6000	8000	0.20	5.0	3.0	5.2	3.4
94	28	29	1.5	1.7	P332_0320 EZ301U	63	65	126	32.00	32/1	5500	8000	0.23	5.0	3.0	4.6	3.4
94	48	51	2.6	1.0	P332_0320 EZ302U	63	65	126	32.00	32/1	5500	8000	0.33	5.0	3.0	4.6	4.0
107	25	25	1.8	1.8	P332_0280 EZ301U	65	70	130	28.00	28/1	6000	8000	0.22	5.0	3.0	5.1	3.4
107	42	45	3.0	1.1	P332_0280 EZ302U	65	70	130	28.00	28/1	6000	8000	0.32	5.0	3.0	5.1	4.0
120	22	23	1.7	2.3	P332_0250 EZ301U	67	67	150	25.00	25/1	6000	8000	0.21	5.0	3.0	5.2	3.4
120	38	40	2.9	1.3	P332_0250 EZ302U	75	75	150	25.00	25/1	6000	8000	0.31	5.0	3.0	5.2	4.0
120	49	52	3.8	1.0	P332_0250 EZ303U	75	75	150	25.00	25/1	6000	8000	0.42	5.0	3.0	5.2	4.5
150	18	18	1.9	2.8	P332_0200 EZ301U	53	53	150	20.00	20/1	5500	8000	0.23	5.0	3.0	5.3	3.4
150	30	32	3.2	1.7	P332_0200 EZ302U	75	75	150	20.00	20/1	5500	8000	0.33	5.0	3.0	5.3	4.0
150	39	42	4.2	1.3	P332_0200 EZ303U	75	75	150	20.00	20/1	5500	8000	0.44	5.0	3.0	5.3	4.5

n_{2N} [rpm]	M_{2N} [Nm]	$M_{2,0}$ [Nm]	a_{th}	S	Type	M_{2acc} [Nm]	M_{2accHT} [Nm]	M_{2NOT} [Nm]	i	i_{exakt}	n_{1maxDB} [rpm]	n_{1maxZB} [rpm]	J_1 [kgcm²]	$\Delta\varphi_2$ [arcmin]	$\Delta\varphi_{2red}$ [arcmin]	C_2 [Nm/ arcmin]	m [kg]
P3 (n_{1N} = 3000 min^{-1}, $M_{2acc,max}$ = 75 Nm)																	
188	14	14	2.4	3.2	P332_0160 EZ301U	43	43	130	16.00	16/1	5500	8000	0.23	5.0	3.0	5.2	3.4
188	24	26	4.0	1.9	P332_0160 EZ302U	65	65	130	16.00	16/1	5500	8000	0.33	5.0	3.0	5.2	4.0
188	31	33	5.2	1.4	P332_0160 EZ303U	65	65	130	16.00	16/1	5500	8000	0.44	5.0	3.0	5.2	4.5
250	11	11	4.1	2.8	P332_0120 EZ301U	32	32	100	12.00	12/1	5500	8000	0.24	5.0	3.0	4.7	3.4
250	18	19	7.0	1.7	P332_0120 EZ302U	50	50	100	12.00	12/1	5500	8000	0.34	5.0	3.0	4.7	4.0
250	24	25	9.1	1.3	P332_0120 EZ303U	50	50	100	12.00	12/1	5500	8000	0.45	5.0	3.0	4.7	4.5
300	9.0	9.2	0.5	3.2	P331_0100 EZ301U	27	27	120	10.00	10/1	5500	8000	0.21	4.0	2.0	4.4	3.0
300	15	16	0.9	1.9	P331_0100 EZ302U	49	49	120	10.00	10/1	5500	8000	0.31	4.0	2.0	4.4	3.6
300	20	21	1.1	1.4	P331_0100 EZ303U	60	60	120	10.00	10/1	5500	8000	0.42	4.0	2.0	4.4	4.1
300	27	29	1.5	1.1	P331_0100 EZ401U	60	60	120	10.00	10/1	5500	8000	0.95	4.0	2.0	4.4	5.5
375	7.2	7.4	0.5	4.8	P331_0080 EZ301U	22	22	126	8.000	8/1	5000	8000	0.22	4.0	2.0	4.7	3.0
375	12	13	0.9	2.8	P331_0080 EZ302U	39	39	126	8.000	8/1	5000	8000	0.32	4.0	2.0	4.7	3.6
375	16	17	1.2	2.2	P331_0080 EZ303U	54	54	126	8.000	8/1	5000	8000	0.43	4.0	2.0	4.7	4.1
375	22	23	1.6	1.6	P331_0080 EZ401U	63	65	126	8.000	8/1	5000	8000	0.96	4.0	2.0	4.7	5.5
429	11	11	1.0	3.6	P331_0070 EZ302U	34	34	138	7.000	7/1	5000	8000	0.33	4.0	2.0	5.1	3.6
429	14	15	1.3	2.8	P331_0070 EZ303U	48	48	138	7.000	7/1	5000	8000	0.44	4.0	2.0	5.1	4.1
429	19	20	1.7	2.1	P331_0070 EZ401U	58	58	138	7.000	7/1	5000	8000	0.97	4.0	2.0	5.1	5.5
429	32	35	2.9	1.2	P331_0070 EZ402U	69	75	138	7.000	7/1	5000	8000	1.7	4.0	2.0	5.1	6.6
600	10	11	1.9	3.9	P331_0050 EZ303U	34	34	150	5.000	5/1	4500	8000	0.48	4.0	2.0	5.5	4.1
600	14	15	2.6	2.9	P331_0050 EZ401U	41	41	150	5.000	5/1	4500	8000	1.0	4.0	2.0	5.5	5.5
600	23	25	4.3	1.7	P331_0050 EZ402U	75	78	150	5.000	5/1	4500	8000	1.7	4.0	2.0	5.5	6.6
750	8.0	8.5	2.5	4.9	P331_0040 EZ303U	27	27	130	4.000	4/1	4000	8000	0.53	4.0	2.0	5.5	4.1
750	11	12	3.3	3.6	P331_0040 EZ401U	33	33	130	4.000	4/1	4000	8000	1.1	4.0	2.0	5.5	5.5
750	18	20	5.6	2.2	P331_0040 EZ402U	62	62	130	4.000	4/1	4000	8000	1.8	4.0	2.0	5.5	6.6
1000	6.0	6.4	5.2	4.4	P331_0030 EZ303U	20	20	100	3.000	3/1	3500	7000	0.68	4.0	2.0	5.3	4.1
1000	8.1	8.7	7.1	3.2	P331_0030 EZ401U	25	25	100	3.000	3/1	3500	7000	1.2	4.0	2.0	5.3	5.5
1000	14	15	12	1.9	P331_0030 EZ402U	47	47	100	3.000	3/1	3500	7000	1.9	4.0	2.0	5.3	6.6
P3 (n_{1N} = 6000 min^{-1}, $M_{2acc,max}$ = 75 Nm)																	
75	30	33	0.5	1.3	P332_0800 EZ202U	63	65	126	80.00	80/1	6000	8000	0.13	5.0	3.0	4.5	3.3
86	27	29	0.5	1.7	P332_0700 EZ202U	69	69	138	70.00	70/1	6000	8000	0.13	5.0	3.0	4.9	3.3
86	41	46	0.7	1.1	P332_0700 EZ203U	69	69	138	70.00	70/1	6000	8000	0.17	5.0	3.0	4.9	3.6
107	21	23	0.6	1.9	P332_0560 EZ202U	63	65	126	56.00	56/1	6000	8000	0.14	5.0	3.0	4.6	3.3
107	32	37	0.9	1.2	P332_0560 EZ203U	63	65	126	56.00	56/1	6000	8000	0.18	5.0	3.0	4.6	3.6
120	19	21	0.6	2.1	P332_0500 EZ202U	70	70	150	50.00	50/1	6000	8000	0.13	5.0	3.0	5.0	3.3
120	29	33	1.0	1.4	P332_0500 EZ203U	75	75	150	50.00	50/1	6000	8000	0.17	5.0	3.0	5.0	3.6
150	15	17	0.9	2.1	P332_0400 EZ202U	56	56	130	40.00	40/1	6000	8000	0.13	5.0	3.0	4.8	3.3
150	23	26	1.4	1.4	P332_0400 EZ203U	65	65	130	40.00	40/1	6000	8000	0.17	5.0	3.0	4.8	3.6
171	13	15	0.7	3.4	P332_0350 EZ202U	49	49	150	35.00	35/1	6000	8000	0.14	5.0	3.0	5.2	3.3
171	20	23	1.0	2.2	P332_0350 EZ203U	75	75	150	35.00	35/1	6000	8000	0.18	5.0	3.0	5.2	3.6
171	30	32	1.5	1.5	P332_0350 EZ301U	75	75	150	35.00	35/1	6000	8000	0.20	5.0	3.0	5.2	3.4
188	12	13	0.8	3.3	P332_0320 EZ202U	45	45	126	32.00	32/1	5500	8000	0.17	5.0	3.0	4.6	3.3
188	19	21	1.2	2.2	P332_0320 EZ203U	63	65	126	32.00	32/1	5500	8000	0.21	5.0	3.0	4.6	3.6
188	27	29	1.8	1.5	P332_0320 EZ301U	63	65	126	32.00	32/1	5500	8000	0.23	5.0	3.0	4.6	3.4
214	11	12	0.9	3.6	P332_0280 EZ202U	39	39	130	28.00	28/1	6000	8000	0.16	5.0	3.0	5.1	3.3
214	16	18	1.4	2.4	P332_0280 EZ203U	65	70	130	28.00	28/1	6000	8000	0.20	5.0	3.0	5.1	3.6
214	24	25	2.0	1.6	P332_0280 EZ301U	65	70	130	28.00	28/1	6000	8000	0.22	5.0	3.0	5.1	3.4
240	9.5	10	0.8	4.7	P332_0250 EZ202U	35	35	150	25.00	25/1	6000	8000	0.15	5.0	3.0	5.2	3.3
240	14	16	1.2	3.1	P332_0250 EZ203U	64	64	150	25.00	25/1	6000	8000	0.19	5.0	3.0	5.2	3.6
240	21	23	1.8	2.1	P332_0250 EZ301U	67	67	150	25.00	25/1	6000	8000	0.21	5.0	3.0	5.2	3.4
240	36	40	3.0	1.3	P332_0250 EZ302U	75	75	150	25.00	25/1	6000	8000	0.31	5.0	3.0	5.2	4.0
300	12	13	1.4	3.9	P332_0200 EZ203U	51	51	150	20.00	20/1	5500	8000	0.20	5.0	3.0	5.3	3.6
300	17	18	2.0	2.7	P332_0200 EZ301U	53	53	150	20.00	20/1	5500	8000	0.23	5.0	3.0	5.3	3.4
300	29	32	3.4	1.6	P332_0200 EZ302U	75	75	150	20.00	20/1	5500	8000	0.33	5.0	3.0	5.3	4.0
300	37	43	4.4	1.2	P332_0200 EZ303U	75	75	150	20.00	20/1	5500	8000	0.44	5.0	3.0	5.3	4.5
375	9.3	10	1.8	4.1	P332_0160 EZ203U	41	41	130	16.00	16/1	5500	8000	0.21	5.0	3.0	5.2	3.6
375	14	14	2.6	2.8	P332_0160 EZ301U	43	43	130	16.00	16/1	5500	8000	0.23	5.0	3.0	5.2	3.4
375	23	26	4.5	1.7	P332_0160 EZ302U	65	65	130	16.00	16/1	5500	8000	0.33	5.0	3.0	5.2	4.0
375	30	34	5.8	1.3	P332_0160 EZ303U	65	65	130	16.00	16/1	5500	8000	0.44	5.0	3.0	5.2	4.5
500	7.0	7.9	3.0	3.9	P332_0120 EZ203U	31	31	100	12.00	12/1	5500	8000	0.22	5.0	3.0	4.7	3.6
500	10	11	4.3	2.7	P332_0120 EZ301U	32	32	100	12.00	12/1	5500	8000	0.24	5.0	3.0	4.7	3.4
500	17	19	7.3	1.6	P332_0120 EZ302U	50	50	100	12.00	12/1	5500	8000	0.34	5.0	3.0	4.7	4.0
500	22	26	9.5	1.2	P332_0120 EZ303U	50	50	100	12.00	12/1	5500	8000	0.45	5.0	3.0	4.7	4.5
600	8.6	9.2	0.6	2.6	P331_0100 EZ301U	27	27	120	10.00	10/1	5500	8000	0.21	4.0	2.0	4.4	3.0
600	15	16	1.0	1.6	P331_0100 EZ302U	49	49	120	10.00	10/1	5500	8000	0.31	4.0	2.0	4.4	3.6
600	19	22	1.4	1.2	P331_0100 EZ303U	60	60	120	10.00	10/1	5500	8000	0.42	4.0	2.0	4.4	4.1

n_{2N} [rpm]	M_{2N} [Nm]	$M_{2,0}$ [Nm]	a_{th}	S	Type	M_{2acc} [Nm]	M_{2accHT} [Nm]	M_{2NOT} [Nm]	i	i_{exakt}	n_{1maxDB} [rpm]	n_{1maxZB} [rpm]	J_1 [kgcm²]	$\Delta\varphi_2$ [arcmin]	$\Delta\varphi_{2red}$ [arcmin]	C_2 [Nm/ arcmin]	m [kg]
P3 (n_{1N} = 6000 min^{-1}, $M_{2acc,max}$ = 75 Nm)																	
600	22	27	1.6	1.0	P331_0100 EZ401U	60	60	120	10.00	10/1	5500	8000	0.95	4.0	2.0	4.4	5.5
750	6.9	7.4	0.7	4.0	P331_0080 EZ301U	22	22	126	8.000	8/1	5000	8000	0.22	4.0	2.0	4.7	3.0
750	12	13	1.1	2.4	P331_0080 EZ302U	39	39	126	8.000	8/1	5000	8000	0.32	4.0	2.0	4.7	3.6
750	15	17	1.4	1.8	P331_0080 EZ303U	54	54	126	8.000	8/1	5000	8000	0.43	4.0	2.0	4.7	4.1
750	18	22	1.7	1.6	P331_0080 EZ401U	63	65	126	8.000	8/1	5000	8000	0.96	4.0	2.0	4.7	5.5
750	27	38	2.6	1.0	P331_0080 EZ402U	63	65	126	8.000	8/1	5000	8000	1.7	4.0	2.0	4.7	6.6
857	10	11	1.2	3.1	P331_0070 EZ302U	34	34	138	7.000	7/1	5000	8000	0.33	4.0	2.0	5.1	3.6
857	13	15	1.5	2.3	P331_0070 EZ303U	48	48	138	7.000	7/1	5000	8000	0.44	4.0	2.0	5.1	4.1
857	16	19	1.8	2.0	P331_0070 EZ401U	58	58	138	7.000	7/1	5000	8000	0.97	4.0	2.0	5.1	5.5
857	24	33	2.7	1.3	P331_0070 EZ402U	69	75	138	7.000	7/1	5000	8000	1.7	4.0	2.0	5.1	6.6
1200	7.3	8.1	1.7	4.3	P331_0050 EZ302U	24	24	150	5.000	5/1	4500	8000	0.37	4.0	2.0	5.5	3.6
1200	9.5	11	2.3	3.3	P331_0050 EZ303U	34	34	150	5.000	5/1	4500	8000	0.48	4.0	2.0	5.5	4.1
1200	11	14	2.6	2.8	P331_0050 EZ401U	41	41	150	5.000	5/1	4500	8000	1.0	4.0	2.0	5.5	5.5
1200	17	24	4.0	1.8	P331_0050 EZ402U	75	78	150	5.000	5/1	4500	8000	1.7	4.0	2.0	5.5	6.6
1500	7.6	8.7	3.0	4.1	P331_0040 EZ303U	27	27	130	4.000	4/1	4000	8000	0.53	4.0	2.0	5.5	4.1
1500	8.9	11	3.5	3.5	P331_0040 EZ401U	33	33	130	4.000	4/1	4000	8000	1.1	4.0	2.0	5.5	5.5
1500	14	19	5.3	2.3	P331_0040 EZ402U	62	62	130	4.000	4/1	4000	8000	1.8	4.0	2.0	5.5	6.6
2000	4.4	4.9	4.8	4.8	P331_0030 EZ302U	15	15	100	3.000	3/1	3500	7000	0.57	4.0	2.0	5.3	3.6
2000	5.7	6.5	6.2	3.6	P331_0030 EZ303U	20	20	100	3.000	3/1	3500	7000	0.68	4.0	2.0	5.3	4.1
2000	6.7	8.1	7.3	3.1	P331_0030 EZ401U	25	25	100	3.000	3/1	3500	7000	1.2	4.0	2.0	5.3	5.5
2000	10	14	11	2.0	P331_0030 EZ402U	47	47	100	3.000	3/1	3500	7000	1.9	4.0	2.0	5.3	6.6
P4 (n_{1N} = 3000 min^{-1}, $M_{2acc,max}$ = 140 Nm)																	
38	71	72	0.6	1.3	P432_0800 EZ301U	115	115	230	80.00	80/1	5000	8000	0.20	5.0	3.0	9.6	5.4
43	62	63	0.6	1.6	P432_0700 EZ301U	127	127	253	70.00	70/1	5000	8000	0.20	5.0	3.0	11	5.4
54	49	51	0.7	1.8	P432_0560 EZ301U	115	115	230	56.00	56/1	5000	8000	0.22	5.0	3.0	9.6	5.4
54	85	89	1.2	1.0	P432_0560 EZ302U	115	115	230	56.00	56/1	5000	8000	0.32	5.0	3.0	9.6	6.0
60	44	45	0.7	2.3	P432_0500 EZ301U	132	133	264	50.00	50/1	5000	8000	0.21	5.0	3.0	12	5.4
60	76	80	1.1	1.3	P432_0500 EZ302U	132	138	264	50.00	50/1	5000	8000	0.31	5.0	3.0	12	6.0
60	98	104	1.5	1.0	P432_0500 EZ303U	132	138	264	50.00	50/1	5000	8000	0.42	5.0	3.0	12	6.5
75	35	36	0.9	2.5	P432_0400 EZ301U	106	106	260	40.00	40/1	5000	8000	0.21	5.0	3.0	12	5.4
75	60	64	1.5	1.4	P432_0400 EZ302U	130	130	260	40.00	40/1	5000	8000	0.31	5.0	3.0	12	6.0
75	79	83	1.9	1.1	P432_0400 EZ303U	130	130	260	40.00	40/1	5000	8000	0.42	5.0	3.0	12	6.5
86	31	32	0.8	3.3	P432_0350 EZ301U	93	93	266	35.00	35/1	4500	8000	0.22	5.0	3.0	12	5.4
86	53	56	1.3	1.9	P432_0350 EZ302U	133	138	266	35.00	35/1	4500	8000	0.32	5.0	3.0	12	6.0
86	69	73	1.8	1.5	P432_0350 EZ303U	133	138	266	35.00	35/1	4500	8000	0.43	5.0	3.0	12	6.5
86	93	100	2.4	1.1	P432_0350 EZ401U	133	138	266	35.00	35/1	4500	8000	0.96	5.0	3.0	12	7.9
94	28	29	0.9	3.2	P432_0320 EZ301U	85	85	253	32.00	32/1	4000	8000	0.28	5.0	3.0	9.6	5.4
94	48	51	1.6	1.9	P432_0320 EZ302U	126	131	253	32.00	32/1	4000	8000	0.38	5.0	3.0	9.6	6.0
94	63	67	2.1	1.4	P432_0320 EZ303U	126	131	253	32.00	32/1	4000	8000	0.49	5.0	3.0	9.6	6.5
94	85	91	2.8	1.1	P432_0320 EZ401U	126	131	253	32.00	32/1	4000	8000	1.0	5.0	3.0	9.6	7.9
107	25	25	0.9	3.8	P432_0280 EZ301U	74	74	260	28.00	28/1	4500	8000	0.22	5.0	3.0	12	5.4
107	42	45	1.6	2.2	P432_0280 EZ302U	130	130	260	28.00	28/1	4500	8000	0.32	5.0	3.0	12	6.0
107	55	58	2.1	1.7	P432_0280 EZ303U	130	130	260	28.00	28/1	4500	8000	0.43	5.0	3.0	12	6.5
107	74	80	2.9	1.3	P432_0280 EZ401U	130	130	260	28.00	28/1	4500	8000	0.96	5.0	3.0	12	7.9
120	22	23	1.0	4.5	P432_0250 EZ301U	67	67	268	25.00	25/1	4500	8000	0.25	5.0	3.0	13	5.4
120	38	40	1.6	2.6	P432_0250 EZ302U	119	119	268	25.00	25/1	4500	8000	0.35	5.0	3.0	13	6.0
120	49	52	2.1	2.0	P432_0250 EZ303U	134	139	268	25.00	25/1	4500	8000	0.46	5.0	3.0	13	6.5
120	67	71	2.9	1.5	P432_0250 EZ401U	134	139	268	25.00	25/1	4500	8000	0.99	5.0	3.0	13	7.9
150	30	32	1.9	3.1	P432_0200 EZ302U	95	95	268	20.00	20/1	4000	8000	0.39	5.0	3.0	12	6.0
150	39	42	2.5	2.4	P432_0200 EZ303U	133	133	268	20.00	20/1	4000	8000	0.50	5.0	3.0	12	6.5
150	53	57	3.4	1.8	P432_0200 EZ401U	134	139	268	20.00	20/1	4000	8000	1.0	5.0	3.0	12	7.9
150	89	99	5.7	1.1	P432_0200 EZ402U	134	139	268	20.00	20/1	4000	8000	1.7	5.0	3.0	12	9.0
188	24	26	2.3	3.7	P432_0160 EZ302U	76	76	260	16.00	16/1	4000	8000	0.40	5.0	3.0	12	6.0
188	31	33	3.0	2.8	P432_0160 EZ303U	106	106	260	16.00	16/1	4000	8000	0.51	5.0	3.0	12	6.5
188	43	46	4.0	2.1	P432_0160 EZ401U	129	129	260	16.00	16/1	4000	8000	1.0	5.0	3.0	12	7.9
188	71	79	6.8	1.2	P432_0160 EZ402U	130	130	260	16.00	16/1	4000	8000	1.7	5.0	3.0	12	9.0
250	18	19	3.9	3.3	P432_0120 EZ302U	57	57	200	12.00	12/1	3500	7000	0.42	5.0	3.0	11	6.0
250	24	25	5.1	2.5	P432_0120 EZ303U	80	80	200	12.00	12/1	3500	7000	0.53	5.0	3.0	11	6.5
250	32	34	6.9	1.9	P432_0120 EZ401U	97	97	200	12.00	12/1	3500	7000	1.1	5.0	3.0	11	7.9
250	54	59	12	1.1	P432_0120 EZ402U	100	100	200	12.00	12/1	3500	7000	1.8	5.0	3.0	11	9.0
300	27	29	0.9	2.2	P431_0100 EZ401U	82	82	230	10.00	10/1	4000	8000	0.98	4.0	2.0	9.1	6.5
300	42	46	1.4	1.4	P431_0100 EZ501U	115	115	230	10.00	10/1	4000	8000	2.9	4.0	2.0	9.1	7.5
300	46	50	1.5	1.3	P431_0100 EZ402U	115	115	230	10.00	10/1	4000	8000	1.7	4.0	2.0	9.1	7.6
375	22	23	1.0	3.2	P431_0080 EZ401U	66	66	239	8.000	8/1	4000	8000	1.0	4.0	2.0	9.8	6.5
375	33	36	1.5	2.1	P431_0080 EZ501U	120	124	239	8.000	8/1	4000	8000	3.0	4.0	2.0	9.8	7.5

n_{2N} [rpm]	M_{2N} [Nm]	$M_{2,0}$ [Nm]	a_{th}	S	Type	M_{2acc} [Nm]	M_{2accHT} [Nm]	M_{2NOT} [Nm]	i	i_{exakt}	n_{1maxDB} [rpm]	n_{1maxZB} [rpm]	J_1 [kgcm²]	$\Delta\varphi_2$ [arcmin]	$\Delta\varphi_{2red}$ [arcmin]	C_2 [Nm/ arcmin]	m [kg]
P4 (n_{1N} = 3000 min^{-1}, $M_{2acc,max}$ = 140 Nm)																	
375	36	40	1.7	1.9	P431_0080 EZ402U	120	124	239	8.000	8/1	4000	8000	1.7	4.0	2.0	9.8	7.6
375	54	67	2.5	1.3	P431_0080 EZ404U	120	125	239	8.000	8/1	4000	8000	3.0	4.0	2.0	9.8	9.7
375	57	62	2.6	1.2	P431_0080 EZ502U	120	125	239	8.000	8/1	4000	8000	5.3	4.0	2.0	9.8	9.0
429	19	20	1.1	3.9	P431_0070 EZ401U	58	58	271	7.000	7/1	4000	8000	1.0	4.0	2.0	11	6.5
429	29	32	1.7	2.5	P431_0070 EZ501U	109	109	271	7.000	7/1	4000	8000	3.0	4.0	2.0	11	7.5
429	32	35	1.9	2.3	P431_0070 EZ402U	109	109	271	7.000	7/1	4000	8000	1.7	4.0	2.0	11	7.6
429	47	58	2.7	1.6	P431_0070 EZ404U	135	143	271	7.000	7/1	4000	8000	3.1	4.0	2.0	11	9.7
429	50	54	2.9	1.5	P431_0070 EZ502U	135	143	271	7.000	7/1	4000	8000	5.3	4.0	2.0	11	9.0
429	66	75	3.8	1.1	P431_0070 EZ503U	135	143	271	7.000	7/1	4000	8000	7.7	4.0	2.0	11	10
600	21	23	2.5	3.6	P431_0050 EZ501U	78	78	277	5.000	5/1	3700	7000	3.1	4.0	2.0	13	7.5
600	23	25	2.8	3.3	P431_0050 EZ402U	78	78	277	5.000	5/1	3700	7000	1.8	4.0	2.0	13	7.6
600	33	42	4.1	2.2	P431_0050 EZ404U	139	141	277	5.000	5/1	3700	7000	3.2	4.0	2.0	13	9.7
600	36	39	4.4	2.1	P431_0050 EZ502U	139	145	277	5.000	5/1	3700	7000	5.4	4.0	2.0	13	9.0
600	47	54	5.7	1.6	P431_0050 EZ503U	139	145	277	5.000	5/1	3700	7000	7.8	4.0	2.0	13	10
600	65	78	8.0	1.1	P431_0050 EZ505U	139	145	277	5.000	5/1	3700	7000	12	4.0	2.0	13	13
750	17	18	3.3	4.5	P431_0040 EZ501U	62	62	240	4.000	4/1	3300	6500	3.3	4.0	2.0	13	7.5
750	18	20	3.6	4.1	P431_0040 EZ402U	62	62	240	4.000	4/1	3300	6500	2.0	4.0	2.0	13	7.6
750	27	33	5.3	2.8	P431_0040 EZ404U	113	113	240	4.000	4/1	3300	6500	3.3	4.0	2.0	13	9.7
750	29	31	5.7	2.6	P431_0040 EZ502U	120	120	240	4.000	4/1	3300	6500	5.6	4.0	2.0	13	9.0
750	38	43	7.5	2.0	P431_0040 EZ503U	120	130	240	4.000	4/1	3300	6500	7.9	4.0	2.0	13	10
750	52	62	10	1.4	P431_0040 EZ505U	120	130	240	4.000	4/1	3300	6500	13	4.0	2.0	13	13
1000	13	14	8.0	3.5	P431_0030 EZ501U	47	47	200	3.000	3/1	3000	6000	3.7	4.0	2.0	13	7.5
1000	14	15	8.7	3.2	P431_0030 EZ402U	47	47	200	3.000	3/1	3000	6000	2.4	4.0	2.0	13	7.6
1000	20	25	13	2.2	P431_0030 EZ404U	84	84	200	3.000	3/1	3000	6000	3.8	4.0	2.0	13	9.7
1000	22	23	14	2.0	P431_0030 EZ502U	90	90	200	3.000	3/1	3000	6000	6.0	4.0	2.0	13	9.0
1000	28	32	18	1.5	P431_0030 EZ503U	100	100	200	3.000	3/1	3000	6000	8.4	4.0	2.0	13	10
1000	39	47	25	1.1	P431_0030 EZ505U	100	100	200	3.000	3/1	3000	6000	13	4.0	2.0	13	13
P4 (n_{1N} = 4500 min^{-1}, $M_{2acc,max}$ = 140 Nm)																	
643	65	104	4.3	1.0	P431_0070 EZ505U	135	143	271	7.000	7/1	4000	8000	12	4.0	2.0	11	13
900	46	74	6.4	1.4	P431_0050 EZ505U	139	145	277	5.000	5/1	3700	7000	12	4.0	2.0	13	13
1125	37	59	8.4	1.8	P431_0040 EZ505U	120	130	240	4.000	4/1	3300	6500	13	4.0	2.0	13	13
1500	28	45	20	1.4	P431_0030 EZ505U	100	100	200	3.000	3/1	3000	6000	13	4.0	2.0	13	13
P4 (n_{1N} = 6000 min^{-1}, $M_{2acc,max}$ = 140 Nm)																	
75	68	72	0.6	1.2	P432_0800 EZ301U	115	115	230	80.00	80/1	5000	8000	0.20	5.0	3.0	9.6	5.4
86	59	63	0.6	1.4	P432_0700 EZ301U	127	127	253	70.00	70/1	5000	8000	0.20	5.0	3.0	11	5.4
107	47	51	0.8	1.7	P432_0560 EZ301U	115	115	230	56.00	56/1	5000	8000	0.22	5.0	3.0	9.6	5.4
107	80	89	1.3	1.0	P432_0560 EZ302U	115	115	230	56.00	56/1	5000	8000	0.32	5.0	3.0	9.6	6.0
120	42	45	0.8	2.0	P432_0500 EZ301U	132	133	264	50.00	50/1	5000	8000	0.21	5.0	3.0	12	5.4
120	71	80	1.3	1.2	P432_0500 EZ302U	132	138	264	50.00	50/1	5000	8000	0.31	5.0	3.0	12	6.0
150	34	36	0.9	2.4	P432_0400 EZ301U	106	106	260	40.00	40/1	5000	8000	0.21	5.0	3.0	12	5.4
150	57	64	1.5	1.4	P432_0400 EZ302U	130	130	260	40.00	40/1	5000	8000	0.31	5.0	3.0	12	6.0
150	74	86	2.0	1.1	P432_0400 EZ303U	130	130	260	40.00	40/1	5000	8000	0.42	5.0	3.0	12	6.5
171	30	32	0.9	2.9	P432_0350 EZ301U	93	93	266	35.00	35/1	4500	8000	0.22	5.0	3.0	12	5.4
171	50	56	1.5	1.7	P432_0350 EZ302U	133	138	266	35.00	35/1	4500	8000	0.32	5.0	3.0	12	6.0
171	65	75	2.0	1.3	P432_0350 EZ303U	133	138	266	35.00	35/1	4500	8000	0.43	5.0	3.0	12	6.5
171	76	93	2.3	1.1	P432_0350 EZ401U	133	138	266	35.00	35/1	4500	8000	0.96	5.0	3.0	12	7.9
188	27	29	1.0	3.0	P432_0320 EZ301U	85	85	253	32.00	32/1	4000	8000	0.28	5.0	3.0	9.6	5.4
188	46	51	1.7	1.8	P432_0320 EZ302U	126	131	253	32.00	32/1	4000	8000	0.38	5.0	3.0	9.6	6.0
188	60	68	2.2	1.3	P432_0320 EZ303U	126	131	253	32.00	32/1	4000	8000	0.49	5.0	3.0	9.6	6.5
188	70	85	2.6	1.1	P432_0320 EZ401U	126	131	253	32.00	32/1	4000	8000	1.0	5.0	3.0	9.6	7.9
214	24	25	1.0	3.6	P432_0280 EZ301U	74	74	260	28.00	28/1	4500	8000	0.22	5.0	3.0	12	5.4
214	40	45	1.7	2.1	P432_0280 EZ302U	130	130	260	28.00	28/1	4500	8000	0.32	5.0	3.0	12	6.0
214	52	60	2.2	1.6	P432_0280 EZ303U	130	130	260	28.00	28/1	4500	8000	0.43	5.0	3.0	12	6.5
214	61	74	2.6	1.4	P432_0280 EZ401U	130	130	260	28.00	28/1	4500	8000	0.96	5.0	3.0	12	7.9
240	21	23	1.1	4.0	P432_0250 EZ301U	67	67	268	25.00	25/1	4500	8000	0.25	5.0	3.0	13	5.4
240	36	40	1.8	2.4	P432_0250 EZ302U	119	119	268	25.00	25/1	4500	8000	0.35	5.0	3.0	13	6.0
240	47	53	2.4	1.8	P432_0250 EZ303U	134	139	268	25.00	25/1	4500	8000	0.46	5.0	3.0	13	6.5
240	55	67	2.8	1.6	P432_0250 EZ401U	134	139	268	25.00	25/1	4500	8000	0.99	5.0	3.0	13	7.9
240	83	116	4.2	1.0	P432_0250 EZ402U	134	139	268	25.00	25/1	4500	8000	1.7	5.0	3.0	13	9.0
300	29	32	2.0	3.0	P432_0200 EZ302U	95	95	268	20.00	20/1	4000	8000	0.39	5.0	3.0	12	6.0
300	37	43	2.6	2.3	P432_0200 EZ303U	133	133	268	20.00	20/1	4000	8000	0.50	5.0	3.0	12	6.5
300	44	53	3.1	1.9	P432_0200 EZ401U	134	139	268	20.00	20/1	4000	8000	1.0	5.0	3.0	12	7.9
300	67	93	4.7	1.3	P432_0200 EZ402U	134	139	268	20.00	20/1	4000	8000	1.7	5.0	3.0	12	9.0
375	23	26	2.4	3.5	P432_0160 EZ302U	76	76	260	16.00	16/1	4000	8000	0.40	5.0	3.0	12	6.0
375	30	34	3.2	2.6	P432_0160 EZ303U	106	106	260	16.00	16/1	4000	8000	0.51	5.0	3.0	12	6.5

n_{2N} [rpm]	M_{2N} [Nm]	$M_{2,0}$ [Nm]	a_{th}	S	Type	M_{2acc} [Nm]	M_{2accHT} [Nm]	M_{2NOT} [Nm]	i	i_{exakt}	n_{1maxDB} [rpm]	n_{1maxZB} [rpm]	J_1 [kgcm²]	$\Delta\varphi_2$ [arcmin]	$\Delta\varphi_{2red}$ [arcmin]	C_2 [Nm/ arcmin]	m [kg]
P4 (n_{1N} = 6000 min^{-1}, $M_{2acc,max}$ = 140 Nm)																	
375	35	43	3.7	2.3	P432_0160 EZ401U	129	129	260	16.00	16/1	4000	8000	1.0	5.0	3.0	12	7.9
375	53	74	5.7	1.5	P432_0160 EZ402U	130	130	260	16.00	16/1	4000	8000	1.7	5.0	3.0	12	9.0
500	10	11	2.6	4.9	P432_0120 EZ301U	32	32	200	12.00	12/1	3500	7000	0.32	5.0	3.0	11	5.4
500	17	19	4.4	2.9	P432_0120 EZ302U	57	57	200	12.00	12/1	3500	7000	0.42	5.0	3.0	11	6.0
500	22	26	5.8	2.2	P432_0120 EZ303U	80	80	200	12.00	12/1	3500	7000	0.53	5.0	3.0	11	6.5
500	26	32	6.8	1.9	P432_0120 EZ401U	97	97	200	12.00	12/1	3500	7000	1.1	5.0	3.0	11	7.9
500	40	56	10	1.3	P432_0120 EZ402U	100	100	200	12.00	12/1	3500	7000	1.8	5.0	3.0	11	9.0
600	22	27	0.9	2.1	P431_0100 EZ401U	82	82	230	10.00	10/1	4000	8000	0.98	4.0	2.0	9.1	6.5
600	33	43	1.4	1.4	P431_0100 EZ501U	115	115	230	10.00	10/1	4000	8000	2.9	4.0	2.0	9.1	7.5
600	34	48	1.4	1.4	P431_0100 EZ402U	115	115	230	10.00	10/1	4000	8000	1.7	4.0	2.0	9.1	7.6
750	18	22	1.0	3.1	P431_0080 EZ401U	66	66	239	8.000	8/1	4000	8000	1.0	4.0	2.0	9.8	6.5
750	26	34	1.5	2.1	P431_0080 EZ501U	120	124	239	8.000	8/1	4000	8000	3.0	4.0	2.0	9.8	7.5
750	27	38	1.6	2.0	P431_0080 EZ402U	120	124	239	8.000	8/1	4000	8000	1.7	4.0	2.0	9.8	7.6
750	40	61	2.3	1.4	P431_0080 EZ502U	120	125	239	8.000	8/1	4000	8000	5.3	4.0	2.0	9.8	9.0
750	45	65	2.6	1.2	P431_0080 EZ404U	120	125	239	8.000	8/1	4000	8000	3.0	4.0	2.0	9.8	9.7
750	48	82	2.8	1.2	P431_0080 EZ503U	120	125	239	8.000	8/1	4000	8000	7.6	4.0	2.0	9.8	10
857	16	19	1.1	3.8	P431_0070 EZ401U	58	58	271	7.000	7/1	4000	8000	1.0	4.0	2.0	11	6.5
857	23	30	1.7	2.6	P431_0070 EZ501U	109	109	271	7.000	7/1	4000	8000	3.0	4.0	2.0	11	7.5
857	24	33	1.7	2.5	P431_0070 EZ402U	109	109	271	7.000	7/1	4000	8000	1.7	4.0	2.0	11	7.6
857	35	53	2.6	1.7	P431_0070 EZ502U	135	143	271	7.000	7/1	4000	8000	5.3	4.0	2.0	11	9.0
857	39	57	2.9	1.5	P431_0070 EZ404U	135	143	271	7.000	7/1	4000	8000	3.1	4.0	2.0	11	9.7
857	42	72	3.1	1.4	P431_0070 EZ503U	135	143	271	7.000	7/1	4000	8000	7.7	4.0	2.0	11	10
1200	16	21	2.5	3.6	P431_0050 EZ501U	78	78	277	5.000	5/1	3700	7000	3.1	4.0	2.0	13	7.5
1200	17	24	2.6	3.5	P431_0050 EZ402U	78	78	277	5.000	5/1	3700	7000	1.8	4.0	2.0	13	7.6
1200	25	38	3.9	2.3	P431_0050 EZ502U	139	145	277	5.000	5/1	3700	7000	5.4	4.0	2.0	13	9.0
1200	28	41	4.3	2.1	P431_0050 EZ404U	139	141	277	5.000	5/1	3700	7000	3.2	4.0	2.0	13	9.7
1200	30	51	4.6	2.0	P431_0050 EZ503U	139	145	277	5.000	5/1	3700	7000	7.8	4.0	2.0	13	10
1500	13	17	3.3	4.5	P431_0040 EZ501U	62	62	240	4.000	4/1	3300	6500	3.3	4.0	2.0	13	7.5
1500	14	19	3.4	4.3	P431_0040 EZ402U	62	62	240	4.000	4/1	3300	6500	2.0	4.0	2.0	13	7.6
1500	20	30	5.1	2.9	P431_0040 EZ502U	120	120	240	4.000	4/1	3300	6500	5.6	4.0	2.0	13	9.0
1500	23	33	5.6	2.6	P431_0040 EZ404U	113	113	240	4.000	4/1	3300	6500	3.3	4.0	2.0	13	9.7
1500	24	41	6.0	2.5	P431_0040 EZ503U	120	130	240	4.000	4/1	3300	6500	7.9	4.0	2.0	13	10
2000	9.9	13	7.9	3.5	P431_0030 EZ501U	47	47	200	3.000	3/1	3000	6000	3.7	4.0	2.0	13	7.5
2000	10	14	8.2	3.4	P431_0030 EZ402U	47	47	200	3.000	3/1	3000	6000	2.4	4.0	2.0	13	7.6
2000	15	23	12	2.3	P431_0030 EZ502U	90	90	200	3.000	3/1	3000	6000	6.0	4.0	2.0	13	9.0
2000	17	24	14	2.1	P431_0030 EZ404U	84	84	200	3.000	3/1	3000	6000	3.8	4.0	2.0	13	9.7
2000	18	31	14	1.9	P431_0030 EZ503U	100	100	200	3.000	3/1	3000	6000	8.4	4.0	2.0	13	10
P5 (n_{1N} = 3000 min^{-1}, $M_{2acc,max}$ = 360 Nm)																	
38	213	228	0.8	1.0	P532_0800 EZ401U	288	288	575	80.00	80/1	4200	8000	0.97	4.0	2.0	25	11
43	186	200	0.7	1.4	P532_0700 EZ401U	345	357	690	70.00	70/1	4200	8000	0.97	4.0	2.0	30	11
54	149	160	1.0	1.5	P532_0560 EZ401U	288	288	575	56.00	56/1	4000	8000	1.0	4.0	2.0	25	11
60	133	143	0.9	1.9	P532_0500 EZ401U	352	352	704	50.00	50/1	4000	8000	0.97	4.0	2.0	32	11
60	204	223	1.4	1.2	P532_0500 EZ501U	352	352	704	50.00	50/1	4000	8000	2.9	4.0	2.0	32	12
60	223	247	1.5	1.1	P532_0500 EZ402U	352	352	704	50.00	50/1	4000	8000	1.7	4.0	2.0	32	12
75	106	114	1.2	1.9	P532_0400 EZ401U	300	300	600	40.00	40/1	4000	8000	0.98	4.0	2.0	31	11
75	163	179	1.9	1.2	P532_0400 EZ501U	300	300	600	40.00	40/1	4000	8000	2.9	4.0	2.0	31	12
75	179	198	2.1	1.1	P532_0400 EZ402U	300	300	600	40.00	40/1	4000	8000	1.7	4.0	2.0	31	12
86	93	100	1.0	2.8	P532_0350 EZ401U	283	283	704	35.00	35/1	4000	8000	1.0	4.0	2.0	33	11
86	143	156	1.6	1.9	P532_0350 EZ501U	352	352	704	35.00	35/1	4000	8000	3.0	4.0	2.0	33	12
86	156	173	1.7	1.7	P532_0350 EZ402U	352	352	704	35.00	35/1	4000	8000	1.7	4.0	2.0	33	12
86	229	286	2.5	1.2	P532_0350 EZ404U	352	352	704	35.00	35/1	4000	8000	3.1	4.0	2.0	33	14
86	246	266	2.7	1.1	P532_0350 EZ502U	352	352	704	35.00	35/1	4000	8000	5.3	4.0	2.0	33	13
94	85	91	1.2	2.8	P532_0320 EZ401U	258	258	624	32.00	32/1	3500	7000	1.2	4.0	2.0	25	11
94	131	143	1.8	1.8	P532_0320 EZ501U	312	363	624	32.00	32/1	3500	7000	3.1	4.0	2.0	25	12
94	143	158	2.0	1.7	P532_0320 EZ402U	312	363	624	32.00	32/1	3500	7000	1.9	4.0	2.0	25	12
94	210	261	2.9	1.1	P532_0320 EZ404U	312	363	624	32.00	32/1	3500	7000	3.2	4.0	2.0	25	14
94	225	243	3.1	1.1	P532_0320 EZ502U	312	363	624	32.00	32/1	3500	7000	5.4	4.0	2.0	25	13
107	74	80	1.3	3.1	P532_0280 EZ401U	226	226	600	28.00	28/1	4000	8000	1.0	4.0	2.0	32	11
107	114	125	2.0	2.0	P532_0280 EZ501U	300	300	600	28.00	28/1	4000	8000	3.0	4.0	2.0	32	12
107	125	138	2.2	1.8	P532_0280 EZ402U	300	300	600	28.00	28/1	4000	8000	1.7	4.0	2.0	32	12
107	184	229	3.2	1.3	P532_0280 EZ404U	300	300	600	28.00	28/1	4000	8000	3.1	4.0	2.0	32	14
107	197	213	3.5	1.2	P532_0280 EZ502U	300	300	600	28.00	28/1	4000	8000	5.3	4.0	2.0	32	13
120	67	71	1.2	3.9	P532_0250 EZ401U	202	202	710	25.00	25/1	3700	7000	1.1	4.0	2.0	33	11
120	102	112	1.9	2.5	P532_0250 EZ501U	355	357	710	25.00	25/1	3700	7000	3.1	4.0	2.0	33	12
120	112	124	2.1	2.3	P532_0250 EZ402U	355	357	710	25.00	25/1	3700	7000	1.8	4.0	2.0	33	12

n_{2N} [rpm]	M_{2N} [Nm]	$M_{2,0}$ [Nm]	a_{th}	S	Type	M_{2acc} [Nm]	M_{2accHT} [Nm]	M_{2NOT} [Nm]	i	i_{exakt}	n_{1maxDB} [rpm]	n_{1maxZB} [rpm]	J_1 [kgcm²]	$\Delta\varphi_2$ [arcmin]	$\Delta\varphi_{2red}$ [arcmin]	C_2 [Nm/ arcmin]	m [kg]
P5 (n_{1N} = 3000 min^{-1}, $M_{2acc,max}$ = 360 Nm)																	
120	164	204	3.0	1.6	P532_0250 EZ404U	355	357	710	25.00	25/1	3700	7000	3.1	4.0	2.0	33	14
120	176	190	3.2	1.5	P532_0250 EZ502U	355	357	710	25.00	25/1	3700	7000	5.4	4.0	2.0	33	13
120	230	264	4.3	1.1	P532_0250 EZ503U	355	357	710	25.00	25/1	3700	7000	7.7	4.0	2.0	33	15
150	53	57	1.4	4.7	P532_0200 EZ401U	162	162	710	20.00	20/1	3500	7000	1.2	4.0	2.0	33	11
150	82	89	2.2	3.1	P532_0200 EZ501U	304	304	710	20.00	20/1	3500	7000	3.2	4.0	2.0	33	12
150	89	99	2.4	2.8	P532_0200 EZ402U	304	304	710	20.00	20/1	3500	7000	1.9	4.0	2.0	33	12
150	131	163	3.5	1.9	P532_0200 EZ404U	355	364	710	20.00	20/1	3500	7000	3.2	4.0	2.0	33	14
150	141	152	3.8	1.8	P532_0200 EZ502U	355	364	710	20.00	20/1	3500	7000	5.5	4.0	2.0	33	13
150	184	211	4.9	1.4	P532_0200 EZ503U	355	364	710	20.00	20/1	3500	7000	7.8	4.0	2.0	33	15
188	65	71	2.8	3.4	P532_0160 EZ501U	243	243	600	16.00	16/1	3500	7000	3.2	4.0	2.0	33	12
188	71	79	3.0	3.1	P532_0160 EZ402U	243	243	600	16.00	16/1	3500	7000	1.9	4.0	2.0	33	12
188	105	131	4.5	2.1	P532_0160 EZ404U	300	300	600	16.00	16/1	3500	7000	3.3	4.0	2.0	33	14
188	112	122	4.8	2.0	P532_0160 EZ502U	300	300	600	16.00	16/1	3500	7000	5.5	4.0	2.0	33	13
188	147	169	6.3	1.5	P532_0160 EZ503U	300	300	600	16.00	16/1	3500	7000	7.9	4.0	2.0	33	15
188	205	243	8.7	1.1	P532_0160 EZ505U	300	300	600	16.00	16/1	3500	7000	12	4.0	2.0	33	18
250	32	34	3.8	3.8	P532_0120 EZ401U	97	97	400	12.00	12/1	3000	6000	1.3	4.0	2.0	31	11
250	49	54	5.9	2.4	P532_0120 EZ501U	182	182	400	12.00	12/1	3000	6000	3.3	4.0	2.0	31	12
250	54	59	6.4	2.2	P532_0120 EZ402U	182	182	400	12.00	12/1	3000	6000	2.0	4.0	2.0	31	12
250	79	98	9.5	1.5	P532_0120 EZ404U	200	200	400	12.00	12/1	3000	6000	3.4	4.0	2.0	31	14
250	84	91	10	1.4	P532_0120 EZ502U	200	200	400	12.00	12/1	3000	6000	5.6	4.0	2.0	31	13
250	111	127	13	1.1	P532_0120 EZ503U	200	200	400	12.00	12/1	3000	6000	8.0	4.0	2.0	31	15
300	42	46	1.6	3.4	P531_0100 EZ501U	155	155	575	10.00	10/1	3700	7000	3.1	3.0	1.0	26	9.4
300	72	78	2.7	2.0	P531_0100 EZ502U	288	288	575	10.00	10/1	3700	7000	5.4	3.0	1.0	26	11
300	72	81	2.7	2.0	P531_0100 EZ701U	194	194	575	10.00	10/1	3700	7000	8.7	3.0	1.0	26	13
300	94	108	3.5	1.5	P531_0100 EZ503U	288	288	575	10.00	10/1	3700	7000	7.8	3.0	1.0	26	12
300	116	140	4.4	1.2	P531_0100 EZ702U	288	288	575	10.00	10/1	3700	7000	14	3.0	1.0	26	15
300	131	155	4.9	1.1	P531_0100 EZ505U	288	288	575	10.00	10/1	3700	7000	12	3.0	1.0	26	15
375	57	62	2.9	3.0	P531_0080 EZ502U	241	241	592	8.000	8/1	3700	7000	5.5	3.0	1.0	25	11
375	57	64	2.9	3.0	P531_0080 EZ701U	155	155	592	8.000	8/1	3700	7000	8.8	3.0	1.0	25	13
375	75	86	3.8	2.3	P531_0080 EZ503U	296	300	592	8.000	8/1	3700	7000	7.8	3.0	1.0	25	12
375	93	112	4.7	1.9	P531_0080 EZ702U	296	300	592	8.000	8/1	3700	7000	14	3.0	1.0	25	15
375	105	124	5.3	1.7	P531_0080 EZ505U	296	300	592	8.000	8/1	3700	7000	12	3.0	1.0	25	15
375	128	161	6.4	1.4	P531_0080 EZ703U	296	300	592	8.000	8/1	3700	7000	22	3.0	1.0	25	17
375	165	234	8.3	1.1	P531_0080 EZ705U	296	300	592	8.000	8/1	3700	7000	34	3.0	1.0	25	23
429	50	54	3.2	3.7	P531_0070 EZ502U	210	210	667	7.000	7/1	3700	7000	5.5	3.0	1.0	31	11
429	50	56	3.2	3.7	P531_0070 EZ701U	136	136	667	7.000	7/1	3700	7000	8.8	3.0	1.0	31	13
429	66	75	4.2	2.8	P531_0070 EZ503U	292	292	667	7.000	7/1	3700	7000	7.9	3.0	1.0	31	12
429	81	98	5.2	2.3	P531_0070 EZ702U	278	278	667	7.000	7/1	3700	7000	14	3.0	1.0	31	15
429	92	109	5.9	2.0	P531_0070 EZ505U	333	380	667	7.000	7/1	3700	7000	12	3.0	1.0	31	15
429	112	141	7.2	1.6	P531_0070 EZ703U	333	380	667	7.000	7/1	3700	7000	22	3.0	1.0	31	17
429	145	205	9.3	1.3	P531_0070 EZ705U	333	380	667	7.000	7/1	3700	7000	34	3.0	1.0	31	23
600	47	54	6.3	3.9	P531_0050 EZ503U	209	209	568	5.000	5/1	3500	7000	8.3	3.0	1.0	35	12
600	58	70	7.8	3.2	P531_0050 EZ702U	199	199	700	5.000	5/1	3500	7000	14	3.0	1.0	35	15
600	65	78	8.8	2.8	P531_0050 EZ505U	325	325	568	5.000	5/1	3500	7000	13	3.0	1.0	35	15
600	80	101	11	2.3	P531_0050 EZ703U	315	315	700	5.000	5/1	3500	7000	22	3.0	1.0	35	17
600	103	146	14	1.8	P531_0050 EZ705U	350	385	700	5.000	5/1	3500	7000	35	3.0	1.0	35	23
750	38	43	8.3	4.9	P531_0040 EZ503U	167	167	457	4.000	4/1	3000	6000	8.8	3.0	1.0	35	12
750	47	56	10	3.9	P531_0040 EZ702U	159	159	600	4.000	4/1	3000	6000	15	3.0	1.0	35	15
750	52	62	11	3.5	P531_0040 EZ505U	260	260	457	4.000	4/1	3000	6000	13	3.0	1.0	35	15
750	64	81	14	2.9	P531_0040 EZ703U	252	252	600	4.000	4/1	3000	6000	23	3.0	1.0	35	17
750	83	117	18	2.2	P531_0040 EZ705U	300	320	600	4.000	4/1	3000	6000	35	3.0	1.0	35	23
1000	22	23	16	4.9	P531_0030 EZ502U	90	90	343	3.000	3/1	2500	5000	8.0	3.0	1.0	35	11
1000	22	24	16	4.9	P531_0030 EZ701U	58	58	400	3.000	3/1	2500	5000	11	3.0	1.0	35	13
1000	28	32	20	3.7	P531_0030 EZ503U	125	125	343	3.000	3/1	2500	5000	10	3.0	1.0	35	12
1000	35	42	25	3.0	P531_0030 EZ702U	119	119	400	3.000	3/1	2500	5000	16	3.0	1.0	35	15
1000	39	47	28	2.7	P531_0030 EZ505U	195	195	343	3.000	3/1	2500	5000	15	3.0	1.0	35	15
1000	48	61	35	2.2	P531_0030 EZ703U	189	189	400	3.000	3/1	2500	5000	24	3.0	1.0	35	17
1000	62	88	45	1.7	P531_0030 EZ705U	200	200	400	3.000	3/1	2500	5000	37	3.0	1.0	35	23
P5 (n_{1N} = 4500 min^{-1}, $M_{2acc,max}$ = 360 Nm)																	
180	226	363	4.7	1.0	P532_0250 EZ505U	355	357	710	25.00	25/1	3700	7000	12	4.0	2.0	33	18
225	181	291	5.2	1.3	P532_0200 EZ505U	355	364	710	20.00	20/1	3500	7000	12	4.0	2.0	33	18
281	144	233	6.3	1.5	P532_0160 EZ505U	300	300	600	16.00	16/1	3500	7000	12	4.0	2.0	33	18
375	108	174	13	1.1	P532_0120 EZ505U	200	200	400	12.00	12/1	3000	6000	13	4.0	2.0	31	18
450	92	148	4.0	1.4	P531_0100 EZ505U	288	288	575	10.00	10/1	3700	7000	12	3.0	1.0	26	15
450	117	194	5.0	1.1	P531_0100 EZ703U	288	288	575	10.00	10/1	3700	7000	22	3.0	1.0	26	17

n_{2N} [rpm]	M_{2N} [Nm]	$M_{2,0}$ [Nm]	a_{th}	S	Type	M_{2acc} [Nm]	M_{2accHT} [Nm]	M_{2NOT} [Nm]	i	i_{exakt}	n_{1maxDB} [rpm]	n_{1maxZB} [rpm]	J_1 [kgcm²]	$\Delta\varphi_2$ [arcmin]	$\Delta\varphi_{2red}$ [arcmin]	C_2 [Nm/ arcmin]	m [kg]
P5 (n_{1N} = 4500 min^{-1}, $M_{2acc,max}$ = 360 Nm)																	
563	74	119	4.2	2.1	P531_0080 EZ505U	296	300	592	8.000	8/1	3700	7000	12	3.0	1.0	25	15
563	94	155	5.4	1.6	P531_0080 EZ703U	296	300	592	8.000	8/1	3700	7000	22	3.0	1.0	25	17
563	127	233	7.3	1.2	P531_0080 EZ705U	296	300	592	8.000	8/1	3700	7000	34	3.0	1.0	25	23
643	65	104	4.7	2.5	P531_0070 EZ505U	333	380	667	7.000	7/1	3700	7000	12	3.0	1.0	31	15
643	82	136	6.0	2.0	P531_0070 EZ703U	333	380	667	7.000	7/1	3700	7000	22	3.0	1.0	31	17
643	111	204	8.2	1.4	P531_0070 EZ705U	333	380	667	7.000	7/1	3700	7000	34	3.0	1.0	31	23
900	46	74	7.1	3.5	P531_0050 EZ505U	325	325	568	5.000	5/1	3500	7000	13	3.0	1.0	35	15
900	59	97	9.0	2.7	P531_0050 EZ703U	315	315	700	5.000	5/1	3500	7000	22	3.0	1.0	35	17
900	80	146	12	2.0	P531_0050 EZ705U	350	385	700	5.000	5/1	3500	7000	35	3.0	1.0	35	23
1125	37	59	9.3	4.3	P531_0040 EZ505U	260	260	457	4.000	4/1	3000	6000	13	3.0	1.0	35	15
1125	47	78	12	3.4	P531_0040 EZ703U	252	252	600	4.000	4/1	3000	6000	23	3.0	1.0	35	17
1125	64	116	16	2.5	P531_0040 EZ705U	300	320	600	4.000	4/1	3000	6000	35	3.0	1.0	35	23
1500	28	45	23	3.3	P531_0030 EZ505U	195	195	343	3.000	3/1	2500	5000	15	3.0	1.0	35	15
1500	35	58	29	2.6	P531_0030 EZ703U	189	189	400	3.000	3/1	2500	5000	24	3.0	1.0	35	17
1500	48	87	40	1.9	P531_0030 EZ705U	200	200	400	3.000	3/1	2500	5000	37	3.0	1.0	35	23
P5 (n_{1N} = 6000 min^{-1}, $M_{2acc,max}$ = 360 Nm)																	
75	175	213	0.7	1.1	P532_0800 EZ401U	288	288	575	80.00	80/1	4200	8000	0.97	4.0	2.0	25	11
86	153	186	0.7	1.4	P532_0700 EZ401U	345	357	690	70.00	70/1	4200	8000	0.97	4.0	2.0	30	11
107	122	149	0.9	1.6	P532_0560 EZ401U	288	288	575	56.00	56/1	4000	8000	1.0	4.0	2.0	25	11
107	181	234	1.3	1.1	P532_0560 EZ501U	288	288	575	56.00	56/1	4000	8000	3.0	4.0	2.0	25	12
107	186	261	1.3	1.1	P532_0560 EZ402U	288	288	575	56.00	56/1	4000	8000	1.7	4.0	2.0	25	12
120	109	133	0.9	1.8	P532_0500 EZ401U	352	352	704	50.00	50/1	4000	8000	0.97	4.0	2.0	32	11
120	162	209	1.4	1.2	P532_0500 EZ501U	352	352	704	50.00	50/1	4000	8000	2.9	4.0	2.0	32	12
120	166	233	1.4	1.2	P532_0500 EZ402U	352	352	704	50.00	50/1	4000	8000	1.7	4.0	2.0	32	12
150	87	106	1.3	1.8	P532_0400 EZ401U	300	300	600	40.00	40/1	4000	8000	0.98	4.0	2.0	31	11
150	129	167	1.9	1.2	P532_0400 EZ501U	300	300	600	40.00	40/1	4000	8000	2.9	4.0	2.0	31	12
150	133	186	2.0	1.2	P532_0400 EZ402U	300	300	600	40.00	40/1	4000	8000	1.7	4.0	2.0	31	12
171	76	93	1.1	2.7	P532_0350 EZ401U	283	283	704	35.00	35/1	4000	8000	1.0	4.0	2.0	33	11
171	113	146	1.6	1.9	P532_0350 EZ501U	352	352	704	35.00	35/1	4000	8000	3.0	4.0	2.0	33	12
171	116	163	1.6	1.8	P532_0350 EZ402U	352	352	704	35.00	35/1	4000	8000	1.7	4.0	2.0	33	12
171	173	259	2.4	1.2	P532_0350 EZ502U	352	352	704	35.00	35/1	4000	8000	5.3	4.0	2.0	33	13
171	193	279	2.7	1.1	P532_0350 EZ404U	352	352	704	35.00	35/1	4000	8000	3.1	4.0	2.0	33	14
171	206	352	2.8	1.0	P532_0350 EZ503U	352	352	704	35.00	35/1	4000	8000	7.7	4.0	2.0	33	15
188	70	85	1.2	2.9	P532_0320 EZ401U	258	258	624	32.00	32/1	3500	7000	1.2	4.0	2.0	25	11
188	103	134	1.7	1.9	P532_0320 EZ501U	312	363	624	32.00	32/1	3500	7000	3.1	4.0	2.0	25	12
188	106	149	1.8	1.9	P532_0320 EZ402U	312	363	624	32.00	32/1	3500	7000	1.9	4.0	2.0	25	12
188	158	237	2.6	1.3	P532_0320 EZ502U	312	363	624	32.00	32/1	3500	7000	5.4	4.0	2.0	25	13
188	176	255	2.9	1.1	P532_0320 EZ404U	312	363	624	32.00	32/1	3500	7000	3.2	4.0	2.0	25	14
188	188	322	3.1	1.1	P532_0320 EZ503U	312	363	624	32.00	32/1	3500	7000	7.8	4.0	2.0	25	15
214	61	74	1.2	3.3	P532_0280 EZ401U	226	226	600	28.00	28/1	4000	8000	1.0	4.0	2.0	32	11
214	90	117	1.8	2.2	P532_0280 EZ501U	300	300	600	28.00	28/1	4000	8000	3.0	4.0	2.0	32	12
214	93	130	1.9	2.2	P532_0280 EZ402U	300	300	600	28.00	28/1	4000	8000	1.7	4.0	2.0	32	12
214	138	207	2.8	1.5	P532_0280 EZ502U	300	300	600	28.00	28/1	4000	8000	5.3	4.0	2.0	32	13
214	154	223	3.1	1.3	P532_0280 EZ404U	300	300	600	28.00	28/1	4000	8000	3.1	4.0	2.0	32	14
214	165	282	3.3	1.2	P532_0280 EZ503U	300	300	600	28.00	28/1	4000	8000	7.7	4.0	2.0	32	15
240	55	67	1.2	3.8	P532_0250 EZ401U	202	202	710	25.00	25/1	3700	7000	1.1	4.0	2.0	33	11
240	81	105	1.8	2.6	P532_0250 EZ501U	355	357	710	25.00	25/1	3700	7000	3.1	4.0	2.0	33	12
240	83	116	1.9	2.5	P532_0250 EZ402U	355	357	710	25.00	25/1	3700	7000	1.8	4.0	2.0	33	12
240	124	185	2.8	1.7	P532_0250 EZ502U	355	357	710	25.00	25/1	3700	7000	5.4	4.0	2.0	33	13
240	138	200	3.2	1.5	P532_0250 EZ404U	355	357	710	25.00	25/1	3700	7000	3.1	4.0	2.0	33	14
240	147	252	3.4	1.4	P532_0250 EZ503U	355	357	710	25.00	25/1	3700	7000	7.7	4.0	2.0	33	15
300	44	53	1.4	4.8	P532_0200 EZ401U	162	162	710	20.00	20/1	3500	7000	1.2	4.0	2.0	33	11
300	65	84	2.1	3.2	P532_0200 EZ501U	304	304	710	20.00	20/1	3500	7000	3.2	4.0	2.0	33	12
300	67	93	2.1	3.2	P532_0200 EZ402U	304	304	710	20.00	20/1	3500	7000	1.9	4.0	2.0	33	12
300	99	148	3.2	2.1	P532_0200 EZ502U	355	364	710	20.00	20/1	3500	7000	5.5	4.0	2.0	33	13
300	110	160	3.5	1.9	P532_0200 EZ404U	355	364	710	20.00	20/1	3500	7000	3.2	4.0	2.0	33	14
300	118	201	3.8	1.8	P532_0200 EZ503U	355	364	710	20.00	20/1	3500	7000	7.8	4.0	2.0	33	15
375	52	67	2.5	3.8	P532_0160 EZ501U	243	243	600	16.00	16/1	3500	7000	3.2	4.0	2.0	33	12
375	53	74	2.6	3.7	P532_0160 EZ402U	243	243	600	16.00	16/1	3500	7000	1.9	4.0	2.0	33	12
375	79	119	3.8	2.5	P532_0160 EZ502U	300	300	600	16.00	16/1	3500	7000	5.5	4.0	2.0	33	13
375	88	128	4.2	2.2	P532_0160 EZ404U	300	300	600	16.00	16/1	3500	7000	3.3	4.0	2.0	33	14
375	94	161	4.5	2.1	P532_0160 EZ503U	300	300	600	16.00	16/1	3500	7000	7.9	4.0	2.0	33	15
500	26	32	3.5	4.1	P532_0120 EZ401U	97	97	400	12.00	12/1	3000	6000	1.3	4.0	2.0	31	11
500	39	50	5.2	2.8	P532_0120 EZ501U	182	182	400	12.00	12/1	3000	6000	3.3	4.0	2.0	31	12
500	40	56	5.4	2.7	P532_0120 EZ402U	182	182	400	12.00	12/1	3000	6000	2.0	4.0	2.0	31	12

n_{2N} [rpm]	M_{2N} [Nm]	$M_{2,0}$ [Nm]	a_{th}	S	Type	M_{2acc} [Nm]	M_{2accHT} [Nm]	M_{2NOT} [Nm]	i	i_{exakt}	n_{1maxDB} [rpm]	n_{1maxZB} [rpm]	J_1 [kgcm²]	$\Delta\varphi_2$ [arcmin]	$\Delta\varphi_{2red}$ [arcmin]	C_2 [Nm/ arcmin]	m [kg]
P5 (n_{1N} = 6000 min^{-1}, $M_{2acc,max}$ = 360 Nm)																	
500	59	89	8.0	1.8	P532_0120 EZ502U	200	200	400	12.00	12/1	3000	6000	5.6	4.0	2.0	31	13
500	66	96	8.9	1.6	P532_0120 EZ404U	200	200	400	12.00	12/1	3000	6000	3.4	4.0	2.0	31	14
500	71	121	9.5	1.5	P532_0120 EZ503U	200	200	400	12.00	12/1	3000	6000	8.0	4.0	2.0	31	15
600	33	43	1.6	3.4	P531_0100 EZ501U	155	155	575	10.00	10/1	3700	7000	3.1	3.0	1.0	26	9.4
600	50	76	2.4	2.2	P531_0100 EZ502U	288	288	575	10.00	10/1	3700	7000	5.4	3.0	1.0	26	11
600	50	77	2.4	2.2	P531_0100 EZ701U	194	194	575	10.00	10/1	3700	7000	8.7	3.0	1.0	26	13
600	60	103	2.8	1.9	P531_0100 EZ503U	288	288	575	10.00	10/1	3700	7000	7.8	3.0	1.0	26	12
600	70	139	3.3	1.6	P531_0100 EZ702U	288	288	575	10.00	10/1	3700	7000	14	3.0	1.0	26	15
750	40	61	2.5	3.4	P531_0080 EZ502U	241	241	592	8.000	8/1	3700	7000	5.5	3.0	1.0	25	11
750	40	61	2.5	3.4	P531_0080 EZ701U	155	155	592	8.000	8/1	3700	7000	8.8	3.0	1.0	25	13
750	48	82	3.0	2.9	P531_0080 EZ503U	296	300	592	8.000	8/1	3700	7000	7.8	3.0	1.0	25	12
750	56	111	3.5	2.5	P531_0080 EZ702U	296	300	592	8.000	8/1	3700	7000	14	3.0	1.0	25	15
857	35	53	2.9	4.1	P531_0070 EZ502U	210	210	667	7.000	7/1	3700	7000	5.5	3.0	1.0	31	11
857	35	54	2.9	4.1	P531_0070 EZ701U	136	136	667	7.000	7/1	3700	7000	8.8	3.0	1.0	31	13
857	42	72	3.4	3.5	P531_0070 EZ503U	292	292	667	7.000	7/1	3700	7000	7.9	3.0	1.0	31	12
857	49	97	3.9	3.0	P531_0070 EZ702U	278	278	667	7.000	7/1	3700	7000	14	3.0	1.0	31	15
1200	30	51	5.1	4.8	P531_0050 EZ503U	209	209	568	5.000	5/1	3500	7000	8.3	3.0	1.0	35	12
1200	35	69	5.9	4.2	P531_0050 EZ702U	199	199	700	5.000	5/1	3500	7000	14	3.0	1.0	35	15
P7 (n_{1N} = 2000 min^{-1}, $M_{2acc,max}$ = 810 Nm)																	
250	303	339	8.0	1.3	P731_0080 EZ813U	668	700	1336	8.000	8/1	3000	6000	105	3.0	1.0	58	46
286	265	297	8.5	1.7	P731_0070 EZ813U	805	840	1610	7.000	7/1	3000	6000	106	3.0	1.0	61	46
286	392	467	13	1.1	P731_0070 EZ815U	805	840	1610	7.000	7/1	3000	6000	169	3.0	1.0	61	59
400	189	212	13	2.3	P731_0050 EZ813U	679	679	1610	5.000	5/1	2700	5500	107	3.0	1.0	67	46
400	280	333	19	1.6	P731_0050 EZ815U	805	840	1610	5.000	5/1	2700	5500	170	3.0	1.0	67	59
500	151	170	17	2.9	P731_0040 EZ813U	543	543	1400	4.000	4/1	2500	5000	109	3.0	1.0	69	46
500	224	267	25	2.0	P731_0040 EZ815U	700	725	1400	4.000	4/1	2500	5000	172	3.0	1.0	69	59
667	113	127	37	2.5	P731_0030 EZ813U	407	407	1000	3.000	3/1	2200	4000	114	3.0	1.0	68	46
667	168	200	55	1.7	P731_0030 EZ815U	500	500	1000	3.000	3/1	2200	4000	177	3.0	1.0	68	59
P7 (n_{1N} = 3000 min^{-1}, $M_{2acc,max}$ = 810 Nm)																	
38	327	357	0.7	1.5	P732_0800 EZ501U	620	620	1240	80.00	80/1	3700	7000	3.0	4.0	2.0	57	19
43	286	313	0.6	1.9	P732_0700 EZ501U	762	799	1525	70.00	70/1	3700	7000	3.0	4.0	2.0	60	19
43	492	532	1.1	1.1	P732_0700 EZ502U	762	799	1525	70.00	70/1	3700	7000	5.3	4.0	2.0	60	20
43	492	552	1.1	1.1	P732_0700 EZ701U	762	799	1525	70.00	70/1	3700	7000	8.6	4.0	2.0	60	22
54	229	250	0.8	2.2	P732_0560 EZ501U	650	650	1300	56.00	56/1	3700	7000	3.2	4.0	2.0	57	19
54	394	426	1.4	1.3	P732_0560 EZ502U	650	650	1300	56.00	56/1	3700	7000	5.5	4.0	2.0	57	20
54	394	442	1.4	1.3	P732_0560 EZ701U	650	650	1300	56.00	56/1	3700	7000	8.8	4.0	2.0	57	22
60	204	223	0.8	2.7	P732_0500 EZ501U	760	760	1540	50.00	50/1	3700	7000	3.1	4.0	2.0	63	19
60	352	380	1.3	1.6	P732_0500 EZ502U	770	805	1540	50.00	50/1	3700	7000	5.4	4.0	2.0	63	20
60	352	394	1.3	1.6	P732_0500 EZ701U	770	805	1540	50.00	50/1	3700	7000	8.7	4.0	2.0	63	22
60	461	527	1.7	1.2	P732_0500 EZ503U	770	805	1540	50.00	50/1	3700	7000	7.7	4.0	2.0	63	22
75	163	179	1.0	2.8	P732_0400 EZ501U	608	608	1400	40.00	40/1	3700	7000	3.1	4.0	2.0	63	19
75	281	304	1.8	1.6	P732_0400 EZ502U	700	700	1400	40.00	40/1	3700	7000	5.4	4.0	2.0	63	20
75	281	315	1.8	1.6	P732_0400 EZ701U	700	700	1400	40.00	40/1	3700	7000	8.7	4.0	2.0	63	22
75	369	422	2.3	1.2	P732_0400 EZ503U	700	700	1400	40.00	40/1	3700	7000	7.8	4.0	2.0	63	22
86	143	156	0.9	3.8	P732_0350 EZ501U	532	532	1540	35.00	35/1	3700	7000	3.2	4.0	2.0	64	19
86	246	266	1.6	2.2	P732_0350 EZ502U	770	805	1540	35.00	35/1	3700	7000	5.5	4.0	2.0	64	20
86	246	276	1.6	2.2	P732_0350 EZ701U	665	665	1540	35.00	35/1	3700	7000	8.8	4.0	2.0	64	22
86	323	369	2.1	1.7	P732_0350 EZ503U	770	805	1540	35.00	35/1	3700	7000	7.9	4.0	2.0	64	22
86	399	479	2.6	1.4	P732_0350 EZ702U	770	805	1540	35.00	35/1	3700	7000	14	4.0	2.0	64	24
86	449	532	2.9	1.2	P732_0350 EZ505U	770	805	1540	35.00	35/1	3700	7000	12	4.0	2.0	64	25
94	131	143	1.1	3.6	P732_0320 EZ501U	486	486	1460	32.00	32/1	3000	6000	3.8	4.0	2.0	57	19
94	225	243	1.9	2.1	P732_0320 EZ502U	730	730	1460	32.00	32/1	3000	6000	6.1	4.0	2.0	57	20
94	225	252	1.9	2.1	P732_0320 EZ701U	608	608	1460	32.00	32/1	3000	6000	9.4	4.0	2.0	57	22
94	295	337	2.5	1.6	P732_0320 EZ503U	730	730	1460	32.00	32/1	3000	6000	8.4	4.0	2.0	57	22
94	365	438	3.1	1.3	P732_0320 EZ702U	730	730	1460	32.00	32/1	3000	6000	15	4.0	2.0	57	24
94	410	486	3.5	1.1	P732_0320 EZ505U	730	730	1460	32.00	32/1	3000	6000	13	4.0	2.0	57	25
107	114	125	1.0	4.7	P732_0280 EZ501U	426	426	1400	28.00	28/1	3700	7000	3.2	4.0	2.0	64	19
107	197	213	1.8	2.7	P732_0280 EZ502U	700	700	1400	28.00	28/1	3700	7000	5.5	4.0	2.0	64	20
107	197	221	1.8	2.7	P732_0280 EZ701U	532	532	1400	28.00	28/1	3700	7000	8.8	4.0	2.0	64	22
107	258	295	2.3	2.1	P732_0280 EZ503U	700	700	1400	28.00	28/1	3700	7000	7.9	4.0	2.0	64	22
107	319	383	2.9	1.7	P732_0280 EZ702U	700	700	1400	28.00	28/1	3700	7000	14	4.0	2.0	64	24
107	359	426	3.2	1.5	P732_0280 EZ505U	700	700	1400	28.00	28/1	3700	7000	12	4.0	2.0	64	25
107	439	553	4.0	1.2	P732_0280 EZ703U	700	700	1400	28.00	28/1	3700	7000	22	4.0	2.0	64	26
120	102	112	1.2	4.9	P732_0250 EZ501U	380	380	1610	25.00	25/1	3500	7000	3.5	4.0	2.0	64	19
120	176	190	2.0	2.8	P732_0250 EZ502U	736	736	1610	25.00	25/1	3500	7000	5.8	4.0	2.0	64	20

n_{2N} [rpm]	M_{2N} [Nm]	$M_{2,0}$ [Nm]	a_{th}	S	Type	M_{2acc} [Nm]	M_{2accHT} [Nm]	M_{2NOT} [Nm]	i	i_{exakt}	n_{1maxDB} [rpm]	n_{1maxZB} [rpm]	J_1 [kgcm²]	$\Delta\varphi_2$ [arcmin]	$\Delta\varphi_{2red}$ [arcmin]	C_2 [Nm/ arcmin]	m [kg]
P7 (n_{1N} = 3000 min^{-1}, $M_{2acc,max}$ = 810 Nm)																	
120	176	197	2.0	2.8	P732_0250 EZ701U	475	475	1610	25.00	25/1	3500	7000	9.1	4.0	2.0	64	22
120	230	264	2.7	2.2	P732_0250 EZ503U	805	805	1610	25.00	25/1	3500	7000	8.2	4.0	2.0	64	22
120	285	342	3.3	1.8	P732_0250 EZ702U	805	805	1610	25.00	25/1	3500	7000	14	4.0	2.0	64	24
120	321	380	3.7	1.6	P732_0250 EZ505U	805	805	1610	25.00	25/1	3500	7000	13	4.0	2.0	64	25
120	392	494	4.5	1.3	P732_0250 EZ703U	805	805	1610	25.00	25/1	3500	7000	22	4.0	2.0	64	26
150	141	152	2.5	3.3	P732_0200 EZ502U	589	589	1610	20.00	20/1	3000	6000	6.1	4.0	2.0	64	20
150	141	158	2.5	3.3	P732_0200 EZ701U	380	380	1610	20.00	20/1	3000	6000	9.4	4.0	2.0	64	22
150	184	211	3.2	2.5	P732_0200 EZ503U	805	805	1610	20.00	20/1	3000	6000	8.5	4.0	2.0	64	22
150	228	274	4.0	2.0	P732_0200 EZ702U	779	779	1610	20.00	20/1	3000	6000	15	4.0	2.0	64	24
150	257	304	4.5	1.8	P732_0200 EZ505U	805	805	1610	20.00	20/1	3000	6000	13	4.0	2.0	64	25
150	314	395	5.5	1.5	P732_0200 EZ703U	805	805	1610	20.00	20/1	3000	6000	23	4.0	2.0	64	26
150	405	574	7.1	1.1	P732_0200 EZ705U	805	805	1610	20.00	20/1	3000	6000	35	4.0	2.0	64	32
188	112	122	2.8	4.0	P732_0160 EZ502U	471	471	1400	16.00	16/1	3000	6000	6.3	4.0	2.0	65	20
188	112	126	2.8	4.0	P732_0160 EZ701U	304	304	1400	16.00	16/1	3000	6000	9.6	4.0	2.0	65	22
188	147	169	3.7	3.1	P732_0160 EZ503U	654	654	1400	16.00	16/1	3000	6000	8.6	4.0	2.0	65	22
188	182	219	4.6	2.5	P732_0160 EZ702U	623	623	1400	16.00	16/1	3000	6000	15	4.0	2.0	65	24
188	205	243	5.1	2.2	P732_0160 EZ505U	700	700	1400	16.00	16/1	3000	6000	13	4.0	2.0	65	25
188	251	316	6.3	1.8	P732_0160 EZ703U	700	700	1400	16.00	16/1	3000	6000	23	4.0	2.0	65	26
188	324	459	8.1	1.4	P732_0160 EZ705U	700	700	1400	16.00	16/1	3000	6000	35	4.0	2.0	65	32
250	84	91	5.0	3.5	P732_0120 EZ502U	353	353	1000	12.00	12/1	2500	5000	6.6	4.0	2.0	62	20
250	84	95	5.0	3.5	P732_0120 EZ701U	228	228	1000	12.00	12/1	2500	5000	9.9	4.0	2.0	62	22
250	111	127	6.5	2.7	P732_0120 EZ503U	490	490	1000	12.00	12/1	2500	5000	8.9	4.0	2.0	62	22
250	137	164	8.0	2.2	P732_0120 EZ702U	467	467	1000	12.00	12/1	2500	5000	15	4.0	2.0	62	24
250	154	182	9.0	1.9	P732_0120 EZ505U	500	500	1000	12.00	12/1	2500	5000	14	4.0	2.0	62	25
250	188	237	11	1.6	P732_0120 EZ703U	500	500	1000	12.00	12/1	2500	5000	23	4.0	2.0	62	26
250	243	344	14	1.2	P732_0120 EZ705U	500	500	1000	12.00	12/1	2500	5000	35	4.0	2.0	62	32
300	72	81	1.7	3.9	P731_0100 EZ701U	194	194	1150	10.00	10/1	3000	6000	9.1	3.0	1.0	55	19
300	116	140	2.7	2.4	P731_0100 EZ702U	398	398	1150	10.00	10/1	3000	6000	14	3.0	1.0	55	21
300	160	202	3.7	1.7	P731_0100 EZ703U	575	575	1150	10.00	10/1	3000	6000	22	3.0	1.0	55	23
300	207	293	4.8	1.3	P731_0100 EZ705U	575	575	1150	10.00	10/1	3000	6000	35	3.0	1.0	55	29
375	93	112	2.8	3.8	P731_0080 EZ702U	318	318	1336	8.000	8/1	3000	6000	15	3.0	1.0	58	21
375	128	161	3.9	2.7	P731_0080 EZ703U	504	504	1336	8.000	8/1	3000	6000	23	3.0	1.0	58	23
375	165	234	5.0	2.1	P731_0080 EZ705U	668	700	1336	8.000	8/1	3000	6000	35	3.0	1.0	58	29
429	81	98	3.0	4.7	P731_0070 EZ702U	278	278	1561	7.000	7/1	3000	6000	15	3.0	1.0	61	21
429	112	141	4.1	3.4	P731_0070 EZ703U	441	441	1561	7.000	7/1	3000	6000	23	3.0	1.0	61	23
429	145	205	5.3	2.7	P731_0070 EZ705U	706	706	1561	7.000	7/1	3000	6000	35	3.0	1.0	61	29
600	80	101	6.2	4.8	P731_0050 EZ703U	315	315	1119	5.000	5/1	2700	5500	24	3.0	1.0	67	23
600	103	146	7.9	3.7	P731_0050 EZ705U	504	504	1119	5.000	5/1	2700	5500	36	3.0	1.0	67	29
750	83	117	10	4.7	P731_0040 EZ705U	404	404	899	4.000	4/1	2500	5000	38	3.0	1.0	69	29
1000	62	88	23	3.9	P731_0030 EZ705U	303	303	676	3.000	3/1	2200	4000	43	3.0	1.0	68	29
P7 (n_{1N} = 4000 min^{-1}, $M_{2acc,max}$ = 810 Nm)																	
400	244	424	6.2	1.0	P731_0100 EZ813U	575	575	1150	10.00	10/1	3000	6000	105	3.0	1.0	55	46
500	196	339	6.5	1.6	P731_0080 EZ813U	668	700	1336	8.000	8/1	3000	6000	105	3.0	1.0	58	46
500	203	521	6.7	1.6	P731_0080 EZ815U	668	700	1336	8.000	8/1	3000	6000	168	3.0	1.0	58	59
571	171	297	6.9	2.0	P731_0070 EZ813U	805	840	1610	7.000	7/1	3000	6000	106	3.0	1.0	61	46
571	177	456	7.2	2.0	P731_0070 EZ815U	805	840	1610	7.000	7/1	3000	6000	169	3.0	1.0	61	59
800	122	212	10	2.9	P731_0050 EZ813U	679	679	1610	5.000	5/1	2700	5500	107	3.0	1.0	67	46
800	127	326	11	2.8	P731_0050 EZ815U	805	840	1610	5.000	5/1	2700	5500	170	3.0	1.0	67	59
1000	98	170	14	3.6	P731_0040 EZ813U	543	543	1400	4.000	4/1	2500	5000	109	3.0	1.0	69	46
1000	101	261	14	3.4	P731_0040 EZ815U	700	725	1400	4.000	4/1	2500	5000	172	3.0	1.0	69	59
1333	73	127	30	3.0	P731_0030 EZ813U	407	407	1000	3.000	3/1	2200	4000	114	3.0	1.0	68	46
1333	76	195	31	2.9	P731_0030 EZ815U	500	500	1000	3.000	3/1	2200	4000	177	3.0	1.0	68	59
P7 (n_{1N} = 4500 min^{-1}, $M_{2acc,max}$ = 810 Nm)																	
90	451	727	1.9	1.1	P732_0500 EZ505U	770	805	1540	50.00	50/1	3700	7000	12	4.0	2.0	63	25
113	361	581	2.5	1.1	P732_0400 EZ505U	700	700	1400	40.00	40/1	3700	7000	12	4.0	2.0	63	25
129	316	509	2.3	1.5	P732_0350 EZ505U	770	805	1540	35.00	35/1	3700	7000	12	4.0	2.0	64	25
129	402	665	2.9	1.2	P732_0350 EZ703U	770	805	1540	35.00	35/1	3700	7000	22	4.0	2.0	64	26
141	289	465	2.7	1.5	P732_0320 EZ505U	730	730	1460	32.00	32/1	3000	6000	13	4.0	2.0	57	25
141	368	608	3.4	1.2	P732_0320 EZ703U	730	730	1460	32.00	32/1	3000	6000	22	4.0	2.0	57	26
161	253	407	2.5	1.9	P732_0280 EZ505U	700	700	1400	28.00	28/1	3700	7000	12	4.0	2.0	64	25
161	322	532	3.2	1.5	P732_0280 EZ703U	700	700	1400	28.00	28/1	3700	7000	22	4.0	2.0	64	26
161	436	798	4.4	1.1	P732_0280 EZ705U	700	700	1400	28.00	28/1	3700	7000	34	4.0	2.0	64	32
180	226	363	2.8	2.0	P732_0250 EZ505U	805	805	1610	25.00	25/1	3500	7000	13	4.0	2.0	64	25
180	287	475	3.6	1.6	P732_0250 EZ703U	805	805	1610	25.00	25/1	3500	7000	22	4.0	2.0	64	26
180	390	713	4.9	1.2	P732_0250 EZ705U	805	805	1610	25.00	25/1	3500	7000	35	4.0	2.0	64	32

n_{2N} [rpm]	M_{2N} [Nm]	$M_{2,0}$ [Nm]	a_{th}	S	Type	M_{2acc} [Nm]	M_{2accHT} [Nm]	M_{2NOT} [Nm]	i	i_{exakt}	n_{1maxDB} [rpm]	n_{1maxZB} [rpm]	J_1 [kgcm²]	$\Delta\varphi_2$ [arcmin]	$\Delta\varphi_{2red}$ [arcmin]	C_2 [Nm/ arcmin]	m [kg]
P7 (n_{1N} = 4500 min^{-1}, $M_{2acc,max}$ = 810 Nm)																	
225	181	291	3.2	2.5	P732_0200 EZ505U	805	805	1610	20.00	20/1	3000	6000	13	4.0	2.0	64	25
225	230	380	4.1	2.0	P732_0200 EZ703U	805	805	1610	20.00	20/1	3000	6000	23	4.0	2.0	64	26
225	312	570	5.6	1.4	P732_0200 EZ705U	805	805	1610	20.00	20/1	3000	6000	35	4.0	2.0	64	32
281	144	233	3.6	3.1	P732_0160 EZ505U	700	700	1400	16.00	16/1	3000	6000	13	4.0	2.0	65	25
281	184	304	4.6	2.4	P732_0160 EZ703U	700	700	1400	16.00	16/1	3000	6000	23	4.0	2.0	65	26
281	249	456	6.2	1.8	P732_0160 EZ705U	700	700	1400	16.00	16/1	3000	6000	35	4.0	2.0	65	32
375	108	174	6.6	2.6	P732_0120 EZ505U	500	500	1000	12.00	12/1	2500	5000	14	4.0	2.0	62	25
375	138	228	8.4	2.1	P732_0120 EZ703U	500	500	1000	12.00	12/1	2500	5000	23	4.0	2.0	62	26
375	187	342	11	1.5	P732_0120 EZ705U	500	500	1000	12.00	12/1	2500	5000	35	4.0	2.0	62	32
450	117	194	3.1	2.1	P731_0100 EZ703U	575	575	1150	10.00	10/1	3000	6000	22	3.0	1.0	55	23
450	159	291	4.2	1.5	P731_0100 EZ705U	575	575	1150	10.00	10/1	3000	6000	35	3.0	1.0	55	29
563	94	155	3.2	3.3	P731_0080 EZ703U	504	504	1336	8.000	8/1	3000	6000	23	3.0	1.0	58	23
563	127	233	4.4	2.4	P731_0080 EZ705U	668	700	1336	8.000	8/1	3000	6000	35	3.0	1.0	58	29
643	82	136	3.5	4.1	P731_0070 EZ703U	441	441	1561	7.000	7/1	3000	6000	23	3.0	1.0	61	23
643	111	204	4.7	3.0	P731_0070 EZ705U	706	706	1561	7.000	7/1	3000	6000	35	3.0	1.0	61	29
900	80	146	7.0	4.2	P731_0050 EZ705U	504	504	1119	5.000	5/1	2700	5500	36	3.0	1.0	67	29
P7 (n_{1N} = 6000 min^{-1}, $M_{2acc,max}$ = 810 Nm)																	
75	258	334	0.7	1.5	P732_0800 EZ501U	620	620	1240	80.00	80/1	3700	7000	3.0	4.0	2.0	57	19
75	395	593	1.0	1.0	P732_0800 EZ502U	620	620	1240	80.00	80/1	3700	7000	5.3	4.0	2.0	57	20
75	395	600	1.0	1.0	P732_0800 EZ701U	620	620	1240	80.00	80/1	3700	7000	8.6	4.0	2.0	57	22
86	226	293	0.6	1.9	P732_0700 EZ501U	762	799	1525	70.00	70/1	3700	7000	3.0	4.0	2.0	60	19
86	346	519	1.0	1.3	P732_0700 EZ502U	762	799	1525	70.00	70/1	3700	7000	5.3	4.0	2.0	60	20
86	346	525	1.0	1.3	P732_0700 EZ701U	762	799	1525	70.00	70/1	3700	7000	8.6	4.0	2.0	60	22
86	412	705	1.2	1.1	P732_0700 EZ503U	762	799	1525	70.00	70/1	3700	7000	7.7	4.0	2.0	60	22
107	181	234	0.8	2.2	P732_0560 EZ501U	650	650	1300	56.00	56/1	3700	7000	3.2	4.0	2.0	57	19
107	277	415	1.2	1.4	P732_0560 EZ502U	650	650	1300	56.00	56/1	3700	7000	5.5	4.0	2.0	57	20
107	277	420	1.2	1.4	P732_0560 EZ701U	650	650	1300	56.00	56/1	3700	7000	8.8	4.0	2.0	57	22
107	330	564	1.4	1.2	P732_0560 EZ503U	650	650	1300	56.00	56/1	3700	7000	7.9	4.0	2.0	57	22
107	383	761	1.6	1.0	P732_0560 EZ702U	650	650	1300	56.00	56/1	3700	7000	14	4.0	2.0	57	24
120	162	209	0.7	2.7	P732_0500 EZ501U	760	760	1540	50.00	50/1	3700	7000	3.1	4.0	2.0	63	19
120	247	371	1.1	1.8	P732_0500 EZ502U	770	805	1540	50.00	50/1	3700	7000	5.4	4.0	2.0	63	20
120	247	375	1.1	1.8	P732_0500 EZ701U	770	805	1540	50.00	50/1	3700	7000	8.7	4.0	2.0	63	22
120	295	504	1.4	1.5	P732_0500 EZ503U	770	805	1540	50.00	50/1	3700	7000	7.7	4.0	2.0	63	22
120	342	679	1.6	1.3	P732_0500 EZ702U	770	805	1540	50.00	50/1	3700	7000	14	4.0	2.0	63	24
150	129	167	1.0	2.9	P732_0400 EZ501U	608	608	1400	40.00	40/1	3700	7000	3.1	4.0	2.0	63	19
150	198	296	1.5	1.9	P732_0400 EZ502U	700	700	1400	40.00	40/1	3700	7000	5.4	4.0	2.0	63	20
150	198	300	1.5	1.9	P732_0400 EZ701U	700	700	1400	40.00	40/1	3700	7000	8.7	4.0	2.0	63	22
150	236	403	1.8	1.6	P732_0400 EZ503U	700	700	1400	40.00	40/1	3700	7000	7.8	4.0	2.0	63	22
150	274	543	2.1	1.4	P732_0400 EZ702U	700	700	1400	40.00	40/1	3700	7000	14	4.0	2.0	63	24
171	113	146	0.9	3.9	P732_0350 EZ501U	532	532	1540	35.00	35/1	3700	7000	3.2	4.0	2.0	64	19
171	173	259	1.4	2.5	P732_0350 EZ502U	770	805	1540	35.00	35/1	3700	7000	5.5	4.0	2.0	64	20
171	173	263	1.4	2.5	P732_0350 EZ701U	665	665	1540	35.00	35/1	3700	7000	8.8	4.0	2.0	64	22
171	206	352	1.6	2.1	P732_0350 EZ503U	770	805	1540	35.00	35/1	3700	7000	7.9	4.0	2.0	64	22
171	239	475	1.9	1.8	P732_0350 EZ702U	770	805	1540	35.00	35/1	3700	7000	14	4.0	2.0	64	24
188	103	134	1.1	3.8	P732_0320 EZ501U	486	486	1460	32.00	32/1	3000	6000	3.8	4.0	2.0	57	19
188	158	237	1.6	2.5	P732_0320 EZ502U	730	730	1460	32.00	32/1	3000	6000	6.1	4.0	2.0	57	20
188	158	240	1.6	2.5	P732_0320 EZ701U	608	608	1460	32.00	32/1	3000	6000	9.4	4.0	2.0	57	22
188	188	322	1.9	2.1	P732_0320 EZ503U	730	730	1460	32.00	32/1	3000	6000	8.4	4.0	2.0	57	22
188	219	435	2.2	1.8	P732_0320 EZ702U	730	730	1460	32.00	32/1	3000	6000	15	4.0	2.0	57	24
214	90	117	1.0	4.9	P732_0280 EZ501U	426	426	1400	28.00	28/1	3700	7000	3.2	4.0	2.0	64	19
214	138	207	1.5	3.2	P732_0280 EZ502U	700	700	1400	28.00	28/1	3700	7000	5.5	4.0	2.0	64	20
214	138	210	1.5	3.2	P732_0280 EZ701U	532	532	1400	28.00	28/1	3700	7000	8.8	4.0	2.0	64	22
214	165	282	1.8	2.7	P732_0280 EZ503U	700	700	1400	28.00	28/1	3700	7000	7.9	4.0	2.0	64	22
214	192	380	2.1	2.3	P732_0280 EZ702U	700	700	1400	28.00	28/1	3700	7000	14	4.0	2.0	64	24
240	124	185	1.7	3.4	P732_0250 EZ502U	736	736	1610	25.00	25/1	3500	7000	5.8	4.0	2.0	64	20
240	124	188	1.7	3.4	P732_0250 EZ701U	475	475	1610	25.00	25/1	3500	7000	9.1	4.0	2.0	64	22
240	147	252	2.0	2.8	P732_0250 EZ503U	805	805	1610	25.00	25/1	3500	7000	8.2	4.0	2.0	64	22
240	171	340	2.4	2.4	P732_0250 EZ702U	805	805	1610	25.00	25/1	3500	7000	14	4.0	2.0	64	24
300	99	148	1.9	4.1	P732_0200 EZ502U	589	589	1610	20.00	20/1	3000	6000	6.1	4.0	2.0	64	20
300	99	150	1.9	4.1	P732_0200 EZ701U	380	380	1610	20.00	20/1	3000	6000	9.4	4.0	2.0	64	22
300	118	201	2.3	3.5	P732_0200 EZ503U	805	805	1610	20.00	20/1	3000	6000	8.5	4.0	2.0	64	22
300	137	272	2.7	3.0	P732_0200 EZ702U	779	779	1610	20.00	20/1	3000	6000	15	4.0	2.0	64	24
375	94	161	2.6	4.3	P732_0160 EZ503U	654	654	1400	16.00	16/1	3000	6000	8.6	4.0	2.0	65	22
375	109	217	3.0	3.7	P732_0160 EZ702U	623	623	1400	16.00	16/1	3000	6000	15	4.0	2.0	65	24
600	50	77	1.5	4.4	P731_0100 EZ701U	194	194	1150	10.00	10/1	3000	6000	9.1	3.0	1.0	55	19

n_{2N} [rpm]	M_{2N} [Nm]	$M_{2,0}$ [Nm]	a_{th}	S	Type	M_{2acc} [Nm]	M_{2accHT} [Nm]	M_{2NOT} [Nm]	i	i_{exakt}	n_{1maxDB} [rpm]	n_{1maxZB} [rpm]	J_1 [kgcm²]	$\Delta\varphi_2$ [arcmin]	$\Delta\varphi_{2red}$ [arcmin]	C_2 [Nm/ arcmin]	m [kg]
P7 (n_{1N} = 6000 min^{-1}, $M_{2acc,max}$ = 810 Nm)																	
600	70	139	2.0	3.2	P731_0100 EZ702U	398	398	1150	10.00	10/1	3000	6000	14	3.0	1.0	55	21
750	56	111	2.1	5.0	P731_0080 EZ702U	318	318	1336	8.000	8/1	3000	6000	15	3.0	1.0	58	21
P8 (n_{1N} = 2000 min^{-1}, $M_{2acc,max}$ = 1840 Nm)																	
57	1296	1454	3.5	1.1	P832_0350 EZ813U	1840	2000	3230	35.00	35/1	3000	6000	106	4.0	2.0	176	66
71	1037	1163	5.0	1.1	P832_0280 EZ813U	1600	1600	3200	28.00	28/1	3000	5000	106	4.0	2.0	172	66
80	926	1039	4.4	1.4	P832_0250 EZ813U	1840	2000	3230	25.00	25/1	2900	5000	107	4.0	2.0	177	66
100	741	831	5.2	1.7	P832_0200 EZ813U	1840	2000	3230	20.00	20/1	2700	5000	108	4.0	2.0	177	66
100	1097	1306	7.7	1.1	P832_0200 EZ815U	1840	2000	3230	20.00	20/1	2700	5000	171	4.0	2.0	177	79
125	593	665	6.6	1.9	P832_0160 EZ813U	1600	1600	3200	16.00	16/1	2700	5000	109	4.0	2.0	174	66
125	878	1045	9.7	1.3	P832_0160 EZ815U	1600	1600	3200	16.00	16/1	2700	5000	172	4.0	2.0	174	79
167	444	499	10	1.8	P832_0120 EZ813U	1200	1200	2400	12.00	12/1	2200	4500	110	4.0	2.0	168	66
167	658	784	15	1.2	P832_0120 EZ815U	1200	1200	2400	12.00	12/1	2200	4500	173	4.0	2.0	168	79
200	378	424	3.4	2.0	P831_0100 EZ813U	1358	1358	2760	10.00	10/1	2800	4500	107	3.0	1.0	150	60
200	560	667	5.1	1.4	P831_0100 EZ815U	1380	1380	2760	10.00	10/1	2800	4500	170	3.0	1.0	150	72
250	303	339	4.3	2.6	P831_0080 EZ813U	1086	1086	3000	8.000	8/1	2800	4500	109	3.0	1.0	162	60
250	448	534	6.4	1.8	P831_0080 EZ815U	1500	1500	3000	8.000	8/1	2800	4500	172	3.0	1.0	162	72
286	265	297	4.0	3.8	P831_0070 EZ813U	951	951	3230	7.000	7/1	2800	4500	110	3.0	1.0	170	60
286	392	467	6.0	2.6	P831_0070 EZ815U	1358	1358	3230	7.000	7/1	2800	4500	173	3.0	1.0	170	72
400	280	333	9.0	3.6	P831_0050 EZ815U	970	970	2512	5.000	5/1	2500	4000	178	3.0	1.0	185	72
500	224	267	15	3.6	P831_0040 EZ815U	776	776	2018	4.000	4/1	2000	3500	186	3.0	1.0	187	72
667	168	200	21	4.8	P831_0030 EZ815U	582	582	1518	3.000	3/1	1800	3000	209	3.0	1.0	190	72
P8 (n_{1N} = 3000 min^{-1}, $M_{2acc,max}$ = 1840 Nm)																	
30	703	789	0.6	1.3	P832_1000 EZ701U	1320	1320	2640	100.0	100/1	3000	6000	9.1	4.0	2.0	148	39
38	562	631	0.6	1.8	P832_0800 EZ701U	1380	1380	2760	80.00	80/1	3000	6000	9.1	4.0	2.0	159	39
38	912	1094	1.0	1.1	P832_0800 EZ702U	1380	1380	2760	80.00	80/1	3000	6000	14	4.0	2.0	159	41
43	492	552	0.5	2.5	P832_0700 EZ701U	1330	1330	3220	70.00	70/1	3000	6000	9.1	4.0	2.0	164	39
43	798	958	0.9	1.6	P832_0700 EZ702U	1610	1610	3220	70.00	70/1	3000	6000	14	4.0	2.0	164	41
43	1097	1383	1.2	1.1	P832_0700 EZ703U	1610	1610	3220	70.00	70/1	3000	6000	22	4.0	2.0	164	43
54	394	442	0.7	2.6	P832_0560 EZ701U	1064	1064	2760	56.00	56/1	3000	6000	9.6	4.0	2.0	159	39
54	638	766	1.2	1.6	P832_0560 EZ702U	1380	1380	2760	56.00	56/1	3000	6000	15	4.0	2.0	159	41
54	878	1107	1.6	1.1	P832_0560 EZ703U	1380	1380	2760	56.00	56/1	3000	6000	23	4.0	2.0	159	43
60	352	394	0.6	3.6	P832_0500 EZ701U	950	950	3230	50.00	50/1	3000	6000	9.1	4.0	2.0	173	39
60	570	684	1.0	2.2	P832_0500 EZ702U	1840	1948	3230	50.00	50/1	3000	6000	14	4.0	2.0	173	41
60	784	988	1.4	1.6	P832_0500 EZ703U	1840	2000	3230	50.00	50/1	3000	6000	22	4.0	2.0	173	43
60	1012	1435	1.8	1.3	P832_0500 EZ705U	1840	2000	3230	50.00	50/1	3000	6000	35	4.0	2.0	173	49
75	281	315	0.9	3.6	P832_0400 EZ701U	760	760	3200	40.00	40/1	3000	6000	9.2	4.0	2.0	168	39
75	456	547	1.4	2.2	P832_0400 EZ702U	1558	1558	3200	40.00	40/1	3000	6000	14	4.0	2.0	168	41
75	627	790	1.9	1.6	P832_0400 EZ703U	1600	1600	3200	40.00	40/1	3000	6000	22	4.0	2.0	168	43
75	809	1148	2.5	1.3	P832_0400 EZ705U	1600	1600	3200	40.00	40/1	3000	6000	35	4.0	2.0	168	49
86	399	479	1.2	3.2	P832_0350 EZ702U	1363	1363	3230	35.00	35/1	3000	6000	15	4.0	2.0	176	41
86	549	692	1.6	2.3	P832_0350 EZ703U	1840	2000	3230	35.00	35/1	3000	6000	23	4.0	2.0	176	43
86	708	1004	2.1	1.8	P832_0350 EZ705U	1840	2000	3230	35.00	35/1	3000	6000	35	4.0	2.0	176	49
94	225	252	1.0	4.5	P832_0320 EZ701U	608	608	3049	32.00	32/1	2700	5000	12	4.0	2.0	159	39
94	365	438	1.6	2.8	P832_0320 EZ702U	1246	1246	3049	32.00	32/1	2700	5000	17	4.0	2.0	159	41
94	502	632	2.1	2.0	P832_0320 EZ703U	1525	1595	3049	32.00	32/1	2700	5000	25	4.0	2.0	159	43
94	648	918	2.8	1.6	P832_0320 EZ705U	1525	1595	3049	32.00	32/1	2700	5000	38	4.0	2.0	159	49
107	319	383	1.7	3.2	P832_0280 EZ702U	1091	1091	3200	28.00	28/1	3000	5000	15	4.0	2.0	172	41
107	439	553	2.3	2.3	P832_0280 EZ703U	1600	1600	3200	28.00	28/1	3000	5000	23	4.0	2.0	172	43
107	567	803	3.0	1.8	P832_0280 EZ705U	1600	1600	3200	28.00	28/1	3000	5000	35	4.0	2.0	172	49
120	285	342	1.4	4.4	P832_0250 EZ702U	974	974	3230	25.00	25/1	2900	5000	16	4.0	2.0	177	41
120	392	494	1.9	3.2	P832_0250 EZ703U	1544	1544	3230	25.00	25/1	2900	5000	24	4.0	2.0	177	43
120	506	717	2.5	2.5	P832_0250 EZ705U	1840	2000	3230	25.00	25/1	2900	5000	36	4.0	2.0	177	49
150	314	395	2.2	4.0	P832_0200 EZ703U	1235	1235	3230	20.00	20/1	2700	5000	26	4.0	2.0	177	43
150	405	574	2.8	3.1	P832_0200 EZ705U	1840	1976	3230	20.00	20/1	2700	5000	38	4.0	2.0	177	49
188	251	316	3.0	4.0	P832_0160 EZ703U	988	988	3200	16.00	16/1	2700	5000	26	4.0	2.0	174	43
188	324	459	3.9	3.1	P832_0160 EZ705U	1581	1581	3200	16.00	16/1	2700	5000	38	4.0	2.0	174	49
250	188	237	4.4	4.3	P832_0120 EZ703U	741	741	2400	12.00	12/1	2200	4500	28	4.0	2.0	168	43
250	243	344	5.7	3.3	P832_0120 EZ705U	1186	1186	2400	12.00	12/1	2200	4500	40	4.0	2.0	168	49
P8 (n_{1N} = 4000 min^{-1}, $M_{2acc,max}$ = 1840 Nm)																	
114	838	1453	2.8	1.4	P832_0350 EZ813U	1840	2000	3230	35.00	35/1	3000	6000	106	4.0	2.0	176	66
114	868	2232	2.9	1.3	P832_0350 EZ815U	1840	2000	3230	35.00	35/1	3000	6000	169	4.0	2.0	176	79
125	766	1328	3.6	1.2	P832_0320 EZ813U	1525	1595	3049	32.00	32/1	2700	5000	108	4.0	2.0	159	66
125	794	2041	3.7	1.2	P832_0320 EZ815U	1525	1595	3049	32.00	32/1	2700	5000	171	4.0	2.0	159	79
143	670	1162	3.9	1.4	P832_0280 EZ813U	1600	1600	3200	28.00	28/1	3000	5000	106	4.0	2.0	172	66
143	695	1786	4.0	1.3	P832_0280 EZ815U	1600	1600	3200	28.00	28/1	3000	5000	169	4.0	2.0	172	79

n_{2N} [rpm]	M_{2N} [Nm]	$M_{2,0}$ [Nm]	a_{th}	S	Type	M_{2acc} [Nm]	M_{2accHT} [Nm]	M_{2NOT} [Nm]	i	i_{exakt}	n_{1maxDB} [rpm]	n_{1maxZB} [rpm]	J_1 [kgcm²]	$\Delta\varphi_2$ [arcmin]	$\Delta\varphi_{2red}$ [arcmin]	C_2 [Nm/ arcmin]	m [kg]
P8 (n_{1N} = 4000 min^{-1}, $M_{2acc,max}$ = 1840 Nm)																	
160	599	1038	3.3	1.9	P832_0250 EZ813U	1840	2000	3230	25.00	25/1	2900	5000	107	4.0	2.0	177	66
160	620	1595	3.4	1.8	P832_0250 EZ815U	1840	2000	3230	25.00	25/1	2900	5000	170	4.0	2.0	177	79
200	479	830	3.6	2.4	P832_0200 EZ813U	1840	2000	3230	20.00	20/1	2700	5000	108	4.0	2.0	177	66
200	496	1276	3.8	2.3	P832_0200 EZ815U	1840	2000	3230	20.00	20/1	2700	5000	171	4.0	2.0	177	79
250	383	664	5.1	2.4	P832_0160 EZ813U	1600	1600	3200	16.00	16/1	2700	5000	109	4.0	2.0	174	66
250	397	1021	5.3	2.3	P832_0160 EZ815U	1600	1600	3200	16.00	16/1	2700	5000	172	4.0	2.0	174	79
333	287	498	6.8	2.8	P832_0120 EZ813U	1200	1200	2400	12.00	12/1	2200	4500	110	4.0	2.0	168	66
333	298	765	7.0	2.7	P832_0120 EZ815U	1200	1200	2400	12.00	12/1	2200	4500	173	4.0	2.0	168	79
400	244	424	2.8	2.5	P831_0100 EZ813U	1358	1358	2760	10.00	10/1	2800	4500	107	3.0	1.0	150	60
400	253	651	2.9	2.4	P831_0100 EZ815U	1380	1380	2760	10.00	10/1	2800	4500	170	3.0	1.0	150	72
500	196	339	3.5	3.2	P831_0080 EZ813U	1086	1086	3000	8.000	8/1	2800	4500	109	3.0	1.0	162	60
500	203	521	3.6	3.1	P831_0080 EZ815U	1500	1500	3000	8.000	8/1	2800	4500	172	3.0	1.0	162	72
571	171	297	3.3	4.6	P831_0070 EZ813U	951	951	3230	7.000	7/1	2800	4500	110	3.0	1.0	170	60
571	177	456	3.4	4.5	P831_0070 EZ815U	1358	1358	3230	7.000	7/1	2800	4500	173	3.0	1.0	170	72
P8 (n_{1N} = 4500 min^{-1}, $M_{2acc,max}$ = 1840 Nm)																	
64	805	1330	1.0	1.4	P832_0700 EZ703U	1610	1610	3220	70.00	70/1	3000	6000	22	4.0	2.0	164	43
64	1091	1995	1.3	1.0	P832_0700 EZ705U	1610	1610	3220	70.00	70/1	3000	6000	35	4.0	2.0	164	49
80	644	1064	1.4	1.4	P832_0560 EZ703U	1380	1380	2760	56.00	56/1	3000	6000	23	4.0	2.0	159	43
80	872	1596	1.8	1.0	P832_0560 EZ705U	1380	1380	2760	56.00	56/1	3000	6000	35	4.0	2.0	159	49
90	575	950	1.1	1.9	P832_0500 EZ703U	1840	2000	3230	50.00	50/1	3000	6000	22	4.0	2.0	173	43
90	779	1425	1.5	1.4	P832_0500 EZ705U	1840	2000	3230	50.00	50/1	3000	6000	35	4.0	2.0	173	49
113	460	760	1.6	1.9	P832_0400 EZ703U	1600	1600	3200	40.00	40/1	3000	6000	22	4.0	2.0	168	43
113	623	1140	2.2	1.4	P832_0400 EZ705U	1600	1600	3200	40.00	40/1	3000	6000	35	4.0	2.0	168	49
129	402	665	1.4	2.7	P832_0350 EZ703U	1840	2000	3230	35.00	35/1	3000	6000	23	4.0	2.0	176	43
129	545	998	1.9	2.0	P832_0350 EZ705U	1840	2000	3230	35.00	35/1	3000	6000	35	4.0	2.0	176	49
141	368	608	1.8	2.4	P832_0320 EZ703U	1525	1595	3049	32.00	32/1	2700	5000	25	4.0	2.0	159	43
141	499	912	2.4	1.8	P832_0320 EZ705U	1525	1595	3049	32.00	32/1	2700	5000	38	4.0	2.0	159	49
161	322	532	1.9	2.7	P832_0280 EZ703U	1600	1600	3200	28.00	28/1	3000	5000	23	4.0	2.0	172	43
161	436	798	2.6	2.0	P832_0280 EZ705U	1600	1600	3200	28.00	28/1	3000	5000	35	4.0	2.0	172	49
180	287	475	1.6	3.8	P832_0250 EZ703U	1544	1544	3230	25.00	25/1	2900	5000	24	4.0	2.0	177	43
180	390	713	2.2	2.8	P832_0250 EZ705U	1840	2000	3230	25.00	25/1	2900	5000	36	4.0	2.0	177	49
225	230	380	1.8	4.8	P832_0200 EZ703U	1235	1235	3230	20.00	20/1	2700	5000	26	4.0	2.0	177	43
225	312	570	2.5	3.5	P832_0200 EZ705U	1840	1976	3230	20.00	20/1	2700	5000	38	4.0	2.0	177	49
281	184	304	2.5	4.8	P832_0160 EZ703U	988	988	3200	16.00	16/1	2700	5000	26	4.0	2.0	174	43
281	249	456	3.5	3.5	P832_0160 EZ705U	1581	1581	3200	16.00	16/1	2700	5000	38	4.0	2.0	174	49
375	187	342	4.6	4.1	P832_0120 EZ705U	1186	1186	2400	12.00	12/1	2200	4500	40	4.0	2.0	168	49
P8 (n_{1N} = 6000 min^{-1}, $M_{2acc,max}$ = 1840 Nm)																	
60	494	751	0.6	1.4	P832_1000 EZ701U	1320	1320	2640	100.0	100/1	3000	6000	9.1	4.0	2.0	148	39
60	684	1359	0.8	1.0	P832_1000 EZ702U	1320	1320	2640	100.0	100/1	3000	6000	14	4.0	2.0	148	41
75	395	600	0.5	2.0	P832_0800 EZ701U	1380	1380	2760	80.00	80/1	3000	6000	9.1	4.0	2.0	159	39
75	547	1087	0.7	1.5	P832_0800 EZ702U	1380	1380	2760	80.00	80/1	3000	6000	14	4.0	2.0	159	41
86	346	525	0.5	2.9	P832_0700 EZ701U	1330	1330	3220	70.00	70/1	3000	6000	9.1	4.0	2.0	164	39
86	479	951	0.6	2.1	P832_0700 EZ702U	1610	1610	3220	70.00	70/1	3000	6000	14	4.0	2.0	164	41
107	277	420	0.6	2.9	P832_0560 EZ701U	1064	1064	2760	56.00	56/1	3000	6000	9.6	4.0	2.0	159	39
107	383	761	0.9	2.1	P832_0560 EZ702U	1380	1380	2760	56.00	56/1	3000	6000	15	4.0	2.0	159	41
120	247	375	0.5	4.1	P832_0500 EZ701U	950	950	3230	50.00	50/1	3000	6000	9.1	4.0	2.0	173	39
120	342	679	0.7	3.0	P832_0500 EZ702U	1840	1948	3230	50.00	50/1	3000	6000	14	4.0	2.0	173	41
150	198	300	0.8	4.1	P832_0400 EZ701U	760	760	3200	40.00	40/1	3000	6000	9.2	4.0	2.0	168	39
150	274	543	1.0	3.0	P832_0400 EZ702U	1558	1558	3200	40.00	40/1	3000	6000	14	4.0	2.0	168	41
171	239	475	0.9	4.2	P832_0350 EZ702U	1363	1363	3230	35.00	35/1	3000	6000	15	4.0	2.0	176	41
P9 (n_{1N} = 2000 min^{-1}, $M_{2acc,max}$ = 3450 Nm)																	
40	1852	2077	1.9	1.2	P932_0500 EZ813U	3200	–	6400	50.00	50/1	2800	4500	107	4.0	–	399	93
50	1482	1662	2.5	1.4	P932_0400 EZ813U	3000	–	6000	40.00	40/1	2800	4500	107	4.0	–	394	93
57	1296	1454	2.2	1.8	P932_0350 EZ813U	3300	–	6600	35.00	35/1	2800	4500	110	4.0	–	404	93
57	1920	2286	3.3	1.2	P932_0350 EZ815U	3300	–	6600	35.00	35/1	2800	4500	173	4.0	–	404	106
71	1037	1163	2.6	2.2	P932_0280 EZ813U	3000	–	6000	28.00	28/1	2800	4500	110	4.0	–	402	93
71	1536	1829	3.8	1.5	P932_0280 EZ815U	3000	–	6000	28.00	28/1	2800	4500	173	4.0	–	402	106
80	926	1039	2.5	2.6	P932_0250 EZ813U	3300	–	6600	25.00	25/1	2500	4000	115	4.0	–	407	93
80	1372	1633	3.8	1.8	P932_0250 EZ815U	3300	–	6600	25.00	25/1	2500	4000	178	4.0	–	407	106
100	741	831	2.8	3.4	P932_0200 EZ813U	2660	–	6900	20.00	20/1	2000	3500	123	4.0	–	407	93
100	1097	1306	4.2	2.3	P932_0200 EZ815U	3450	–	6900	20.00	20/1	2000	3500	186	4.0	–	407	106
125	593	665	3.9	3.4	P932_0160 EZ813U	2128	–	6000	16.00	16/1	2000	3500	124	4.0	–	406	93
125	878	1045	5.8	2.3	P932_0160 EZ815U	3000	–	6000	16.00	16/1	2000	3500	187	4.0	–	406	106

n_{2N} [rpm]	M_{2N} [Nm]	$M_{2,0}$ [Nm]	a_{th}	S	Type	M_{2acc} [Nm]	M_{2accHT} [Nm]	M_{2NOT} [Nm]	i	i_{exakt}	n_{1maxDB} [rpm]	n_{1maxZB} [rpm]	J_1 [kgcm²]	$\Delta\varphi_2$ [arcmin]	$\Delta\varphi_{2red}$ [arcmin]	C_2 [Nm/ arcmin]	m [kg]
P9 (n_{1N} = 4000 min^{-1}, $M_{2acc,max}$ = 3300 Nm)																	
57	1676	2906	1.1	1.4	P932_0700 EZ813U	3156	–	6312	70.00	70/1	2800	4500	107	4.0	–	372	93
57	1736	4465	1.1	1.3	P932_0700 EZ815U	3156	–	6312	70.00	70/1	2800	4500	170	4.0	–	372	106
80	1197	2076	1.2	1.9	P932_0500 EZ813U	3200	–	6400	50.00	50/1	2800	4500	107	4.0	–	399	93
80	1240	3189	1.3	1.8	P932_0500 EZ815U	3200	–	6400	50.00	50/1	2800	4500	170	4.0	–	399	106
100	958	1661	1.6	2.1	P932_0400 EZ813U	3000	–	6000	40.00	40/1	2800	4500	107	4.0	–	394	93
100	992	2551	1.6	2.0	P932_0400 EZ815U	3000	–	6000	40.00	40/1	2800	4500	170	4.0	–	394	106
114	838	1453	1.5	2.7	P932_0350 EZ813U	3300	–	6600	35.00	35/1	2800	4500	110	4.0	–	404	93
114	868	2232	1.5	2.6	P932_0350 EZ815U	3300	–	6600	35.00	35/1	2800	4500	173	4.0	–	404	106
143	670	1162	1.7	3.4	P932_0280 EZ813U	3000	–	6000	28.00	28/1	2800	4500	110	4.0	–	402	93
143	695	1786	1.7	3.3	P932_0280 EZ815U	3000	–	6000	28.00	28/1	2800	4500	173	4.0	–	402	106
160	599	1038	1.8	3.8	P932_0250 EZ813U	3300	–	6600	25.00	25/1	2500	4000	115	4.0	–	407	93
160	620	1595	1.8	3.7	P932_0250 EZ815U	3300	–	6600	25.00	25/1	2500	4000	178	4.0	–	407	106

2.3 Dimensional drawings

In this chapter you can find the dimensions of the geared motors.

There is a dimensional drawing for every possible shaft/housing design, each with the tables for gearbox dimensions, motor dimensions and geared motor dimensions.

Dimensions can exceed the specifications of ISO 2768-mK due to casting tolerances or accumulation of individual tolerances.

We reserve the right to make dimensional changes due to ongoing technical development.

You can download 3D models of our standard drives at https://configurator.stoeber.de/en-US/.

Combination options and the dimensions of forced ventilated geared motors can also be found at https://configurator.stoeber.de/en-US/.

Tolerances

Solid shaft	Tolerance
Fit	ISO k6
Feather keys	DIN 6885-1, high form A
Balancing	With half feather key

Centering holes in solid shafts in accordance with DIN 332-2, DR shape

Thread size	M4	M5	M6	M8	M10	M12	M16	M20	M24
Thread depth [mm]	10	12.5	16	19	22	28	36	42	50

2.3.1 G shaft design (solid shaft without feather key)

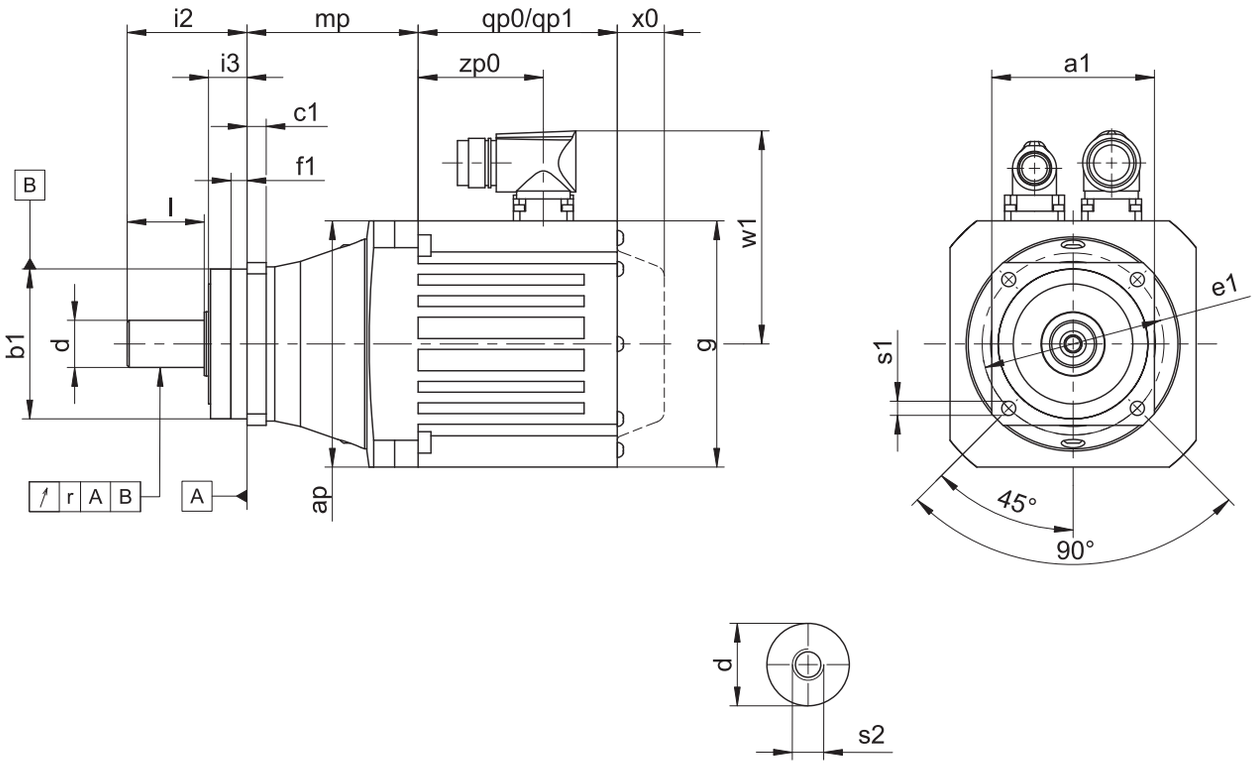

qp0	Applies to motors without brake.	qp1	Applies to motors with brake.
x0	EZ2: Applies only to motors with brake and encoders using an optical or inductive measuring method EZ3 – EZ8: Applies to encoders using an optical measuring method	w1	Different for the One Cable Solution (OCS), see the chapter [▶ 17.4]
–	The radial runout specification applies only to the reinforced bearing D.		

Dimensions of gearboxes

Type	□a1	Ø$b1_{h6}$	c1	Ød_{k6}	Ø$e1_{k6}$	f1	i2	i3	l	r	Øs1	s2
P231	55	50_{h6}	6	12_{k6}	63	7.0	36	12	22	–	5.5	M4
P232	55	50_{h6}	6	12_{k6}	63	7.0	36	12	22	–	5.5	M4
P331	72	60_{h6}	7	16_{k6}	75	7.5	48	18	28	0.025	5.5	M5
P332	72	60_{h6}	7	16_{k6}	75	7.5	48	18	28	0.025	5.5	M5
P431	76	70_{h6}	9	22_{k6}	85	7.5	56	18	36	0.025	6.6	M8
P432	76	70_{h6}	9	22_{k6}	85	7.5	56	18	36	0.025	6.6	M8
P531	101	90_{h6}	10	32_{k6}	120	15.0	88	28	58	0.030	9.0	M12
P532	101	90_{h6}	10	32_{k6}	120	15.0	88	28	58	0.030	9.0	M12
P731	144	130_{h6}	15	40_{k6}	165	3.5	112	27	82	0.035	11.0	M16
P732	144	130_{h6}	15	40_{k6}	165	3.5	112	27	82	0.035	11.0	M16
P831	190	160_{h6}	15	55_{k6}	215	10.0	112	27	82	0.035	13.5	M20
P832	190	160_{h6}	15	55_{k6}	215	10.0	112	27	82	0.035	13.5	M20
P932	212	180_{h6}	17	75_{k6}	250	10.0	143	34	105	0.040	17.5	M20

Dimensions of motors

Type	□g	qp0	qp1	w1	x0	zp0
EZ202U	55	141	150.0	47.0	25	86.0
EZ203U	55	159	168.0	47.0	25	104.0
EZ301U	72	90	130.0	55.5	21	54.5
EZ302U	72	112	152.0	55.5	21	76.5
EZ303U	72	134	174.0	55.5	21	98.5
EZ401U	98	98	146.5	91.0	22	56.0
EZ402U	98	123	171.5	91.0	22	81.0
EZ404U	98	173	221.5	91.0	22	131.0
EZ501U	115	93	147.5	100.0	22	58.5
EZ502U	115	118	172.5	100.0	22	83.5
EZ503U	115	143	197.5	100.0	22	108.5
EZ505U	115	193	247.5	100.0	22	158.5
EZ701U	145	102	161.0	115.0	22	64.0
EZ702U	145	127	186.0	115.0	22	89.0
EZ703U	145	152	211.0	115.0	22	114.0
EZ705U	145	207	266.0	134.0	22	165.0
EZ813U	190	238	315.0	156.5	22	184.0
EZ815U	190	320	397.0	156.5	22	266.0

Dimensions of geared motors

Type	EZ2		EZ3		EZ4		EZ5		EZ7		EZ8	
	ap	mp	ap	mp	ap	mp	ap	mp	ap	mp	ap	mp
P231	□55	48.0	□72	61.5	–	–	–	–	–	–	–	–
P232	□55	80.0	□72	93.5	–	–	–	–	–	–	–	–
P331	–	–	□72	68.5	□98	65.0	–	–	–	–	–	–
P332	∅75	89.5	∅75	103.0	–	–	–	–	–	–	–	–
P431	–	–	–	–	□98	80.5	□115	80.0	–	–	–	–
P432	–	–	∅100	117.5	∅100	114.0	–	–	–	–	–	–
P531	–	–	–	–	–	–	□115	80.5	□145	83.5	–	–
P532	–	–	–	–	∅120	122.5	∅120	122.0	–	–	–	–
P731	–	–	–	–	–	–	–	–	□158	100.5	□190	110.5
P732	–	–	–	–	–	–	∅150	148.5	∅150	151.5	–	–
P831	–	–	–	–	–	–	–	–	–	–	□214	141.5
P832	–	–	–	–	–	–	–	–	∅204	192.5	∅204	202.5
P932	–	–	–	–	–	–	–	–	–	–	∅230	262.5

2.3.2 P shaft design (solid shaft with feather key)

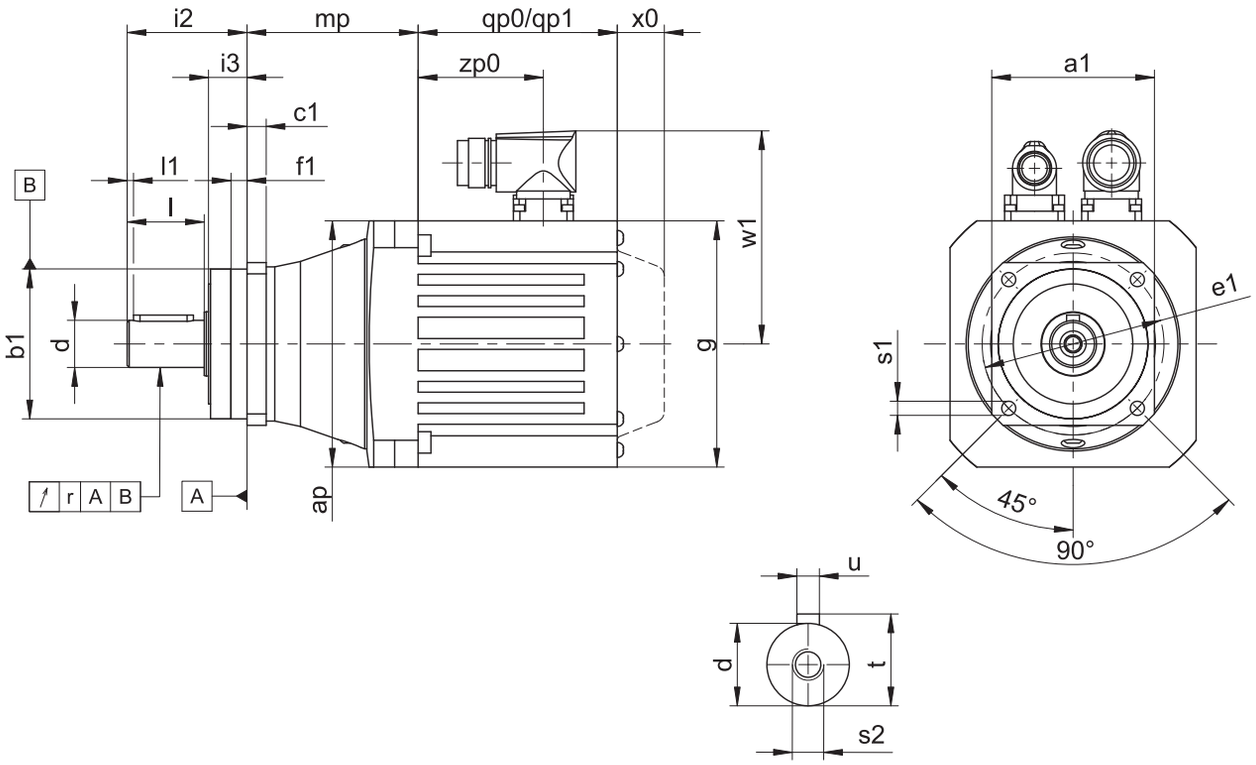

qp0	Applies to motors without brake.	qp1	Applies to motors with brake.
x0	EZ2: Applies only to motors with brake and encoders using an optical or inductive measuring method EZ3 – EZ8: Applies to encoders using an optical measuring method	w1	Different for the One Cable Solution (OCS), see the chapter [▶ 17.4]
–	The radial runout specification applies only to the reinforced bearing D.		

Dimensions of gearboxes

Type	□a1	Øb1	c1	Ød	Øe1	f1	i2	i3	l	l1	r	Øs1	s2	t	u
P231	55	50_{h6}	6	12_{k6}	63	7.0	36	12	22	2	–	5.5	M4	13.5	A4×4×18
P232	55	50_{h6}	6	12_{k6}	63	7.0	36	12	22	2	–	5.5	M4	13.5	A4×4×18
P331	72	60_{h6}	7	16_{k6}	75	7.5	48	18	28	2	0.025	5.5	M5	18.0	A5×5×22
P332	72	60_{h6}	7	16_{k6}	75	7.5	48	18	28	2	0.025	5.5	M5	18.0	A5×5×22
P431	76	70_{h6}	9	22_{k6}	85	7.5	56	18	36	3	0.025	6.6	M8	24.5	A6×6×28
P432	76	70_{h6}	9	22_{k6}	85	7.5	56	18	36	3	0.025	6.6	M8	24.5	A6×6×28
P531	101	90_{h6}	10	32_{k6}	120	15.0	88	28	58	3	0.030	9.0	M12	35.0	A10×8×50
P532	101	90_{h6}	10	32_{k6}	120	15.0	88	28	58	3	0.030	9.0	M12	35.0	A10×8×50
P731	144	130_{h6}	15	40_{k6}	165	3.5	112	27	82	4	0.035	11.0	M16	43.0	A12×8×70
P732	144	130_{h6}	15	40_{k6}	165	3.5	112	27	82	4	0.035	11.0	M16	43.0	A12×8×70
P831	190	160_{h6}	15	55_{k6}	215	10.0	112	27	82	6	0.035	13.5	M20	59.0	A16×10×70
P832	190	160_{h6}	15	55_{k6}	215	10.0	112	27	82	6	0.035	13.5	M20	59.0	A16×10×70
P932	212	180_{h6}	17	75_{k6}	250	10.0	143	34	105	7	0.040	17.5	M20	79.5	A20×12×90

Dimensions of motors

Type	□g	qp0	qp1	w1	x0	zp0
EZ202U	55	141	150.0	47.0	25	86.0
EZ203U	55	159	168.0	47.0	25	104.0
EZ301U	72	90	130.0	55.5	21	54.5
EZ302U	72	112	152.0	55.5	21	76.5
EZ303U	72	134	174.0	55.5	21	98.5
EZ401U	98	98	146.5	91.0	22	56.0
EZ402U	98	123	171.5	91.0	22	81.0
EZ404U	98	173	221.5	91.0	22	131.0
EZ501U	115	93	147.5	100.0	22	58.5
EZ502U	115	118	172.5	100.0	22	83.5
EZ503U	115	143	197.5	100.0	22	108.5
EZ505U	115	193	247.5	100.0	22	158.5
EZ701U	145	102	161.0	115.0	22	64.0
EZ702U	145	127	186.0	115.0	22	89.0
EZ703U	145	152	211.0	115.0	22	114.0
EZ705U	145	207	266.0	134.0	22	165.0
EZ813U	190	238	315.0	156.5	22	184.0
EZ815U	190	320	397.0	156.5	22	266.0

Dimensions of geared motors

Type	EZ2		EZ3		EZ4		EZ5		EZ7		EZ8	
	ap	mp	ap	mp	ap	mp	ap	mp	ap	mp	ap	mp
P231	□55	48.0	□72	61.5	–	–	–	–	–	–	–	–
P232	□55	80.0	□72	93.5	–	–	–	–	–	–	–	–
P331	–	–	□72	68.5	□98	65.0	–	–	–	–	–	–
P332	∅75	89.5	∅75	103.0	–	–	–	–	–	–	–	–
P431	–	–	–	–	□98	80.5	□115	80.0	–	–	–	–
P432	–	–	∅100	117.5	∅100	114.0	–	–	–	–	–	–
P531	–	–	–	–	–	–	□115	80.5	□145	83.5	–	–
P532	–	–	–	–	∅120	122.5	∅120	122.0	–	–	–	–
P731	–	–	–	–	–	–	–	–	□158	100.5	□190	110.5
P732	–	–	–	–	–	–	∅150	148.5	∅150	151.5	–	–
P831	–	–	–	–	–	–	–	–	–	–	□214	141.5
P832	–	–	–	–	–	–	–	–	∅204	192.5	∅204	202.5
P932	–	–	–	–	–	–	–	–	–	–	∅230	262.5

2.4 Type designation

In this chapter, you can find an explanation of the type designation with the associated options.

Additional ordering information not included in the type designation can be found at the end of the chapter.

Example code

P	4	3	1	S	G	S	S	0100	EZ401U

Explanation

Code	Designation	Design
P	Type	Planetary gearbox
4	Size	4 (example)
3	Generation	Generation 3
1	Stages	Single-stage
2		Two-stage
S	Housing	Standard
G	Shaft	Solid shaft without feather key
P		Solid shaft with feather key
S	Bearing	Standard bearing
D		Axially reinforced bearing (P3 – P9)
Z		Radially reinforced bearing (P3 – P9)[1]
S	Backlash	Standard
R		Reduced
0100	Transmission ratio (i x 10)	i = 10 (example)
EZ401U	Motor	EZ synchronous servo motor

To complete the type designation, also specify the following in your order:

- A detailed type designation of the motor, see the chapter [▶ 17.5]
- Radial shaft seal rings at the output made of NBR or FKM (option), see the chapter [▶ 2.6.3]
- Position of the plug connectors, see the chapter [▶ 2.5.4]
- For reverse operation of the output shaft from ±20° to ±90° and horizontal installation, note the chapter [▶ 2.6.4]

To make selecting your geared motor easy, use our STOBER Configurator at https://configurator.stoeber.de/en-US/.

You can find a detailed description of the nameplate in the chapter [▶ 17.5.1].

2.5 Product description

2.5.1 Input options

EZ synchronous servo motor

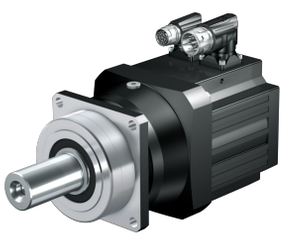

Catalog ID 442437_en

MB motor adapter + EZ synchronous servo motor



Catalog ID 443311_en

LM Lean motor



Catalog ID 443016_en

The corresponding catalogs can be found at http://www.stoeber.de/en/downloads/

Enter the ID of the catalog in the Search term field.

[1] Not for reduced-backlash option.

2.5.2 Installation conditions

The specified torques and forces only apply when gearboxes are fastened on the machine side using screws of strength class 12.9. In addition, the gear housings must be adjusted at the pilot. The machine-side fit must be H7.

2.5.3 Lubricants

STOBER fills the gearboxes with the amount and type of lubricant specified on the nameplate.

You will receive lubricants for use in the food industry upon request.

2.5.4 Position of the plug connectors

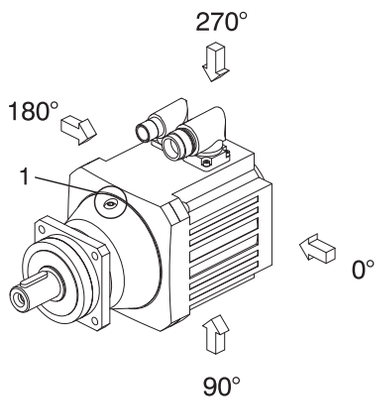

In the standard version, the plug connectors are attached in the 270° position (relative to the oil drain plug (1) of the planetary gearbox). Indicate variations for your geared motor in the order.

2.5.5 Other product features

Feature	Value
Max. permitted gearbox temperature (on the surface of the gearbox)	≤ 90 °C
Paint	Black RAL 9005
Explosion-proof design in accordance with (ATEX) Directive 2014/34/EU (optional)	Not available
Efficiency:	
η_{get} single-stage	97%
η_{get} two-stage	95%
Protection class:[2]	
Gearbox	IP65
Motor	IP56, optionally IP66

2.5.6 Direction of rotation

The input and output rotate in the same direction.

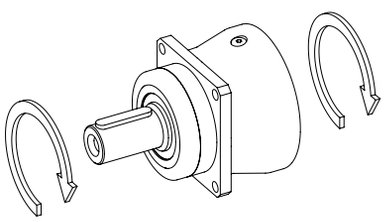

2.6 Project configuration

Project your drives using our SERVOsoft designing software. Download SERVOsoft free of charge after registration at https://www.stoeber.de/en/services/info-servosoft/.

It is the most convenient and reliable method of drive selection, as the entire torque/speed curve of the application is displayed and evaluated here in the curve of the geared motor.

In this chapter, only limit values for specific operating points can be taken into consideration for manual drive selection.

An explanation of the formula symbols can be found in Chapter [▷ 20.1].

The formula symbols for values actually present in the application are marked with *.

[2] Observe the protection class of all the components.

2.6.1 Drive selection

Drive selection for gearboxes

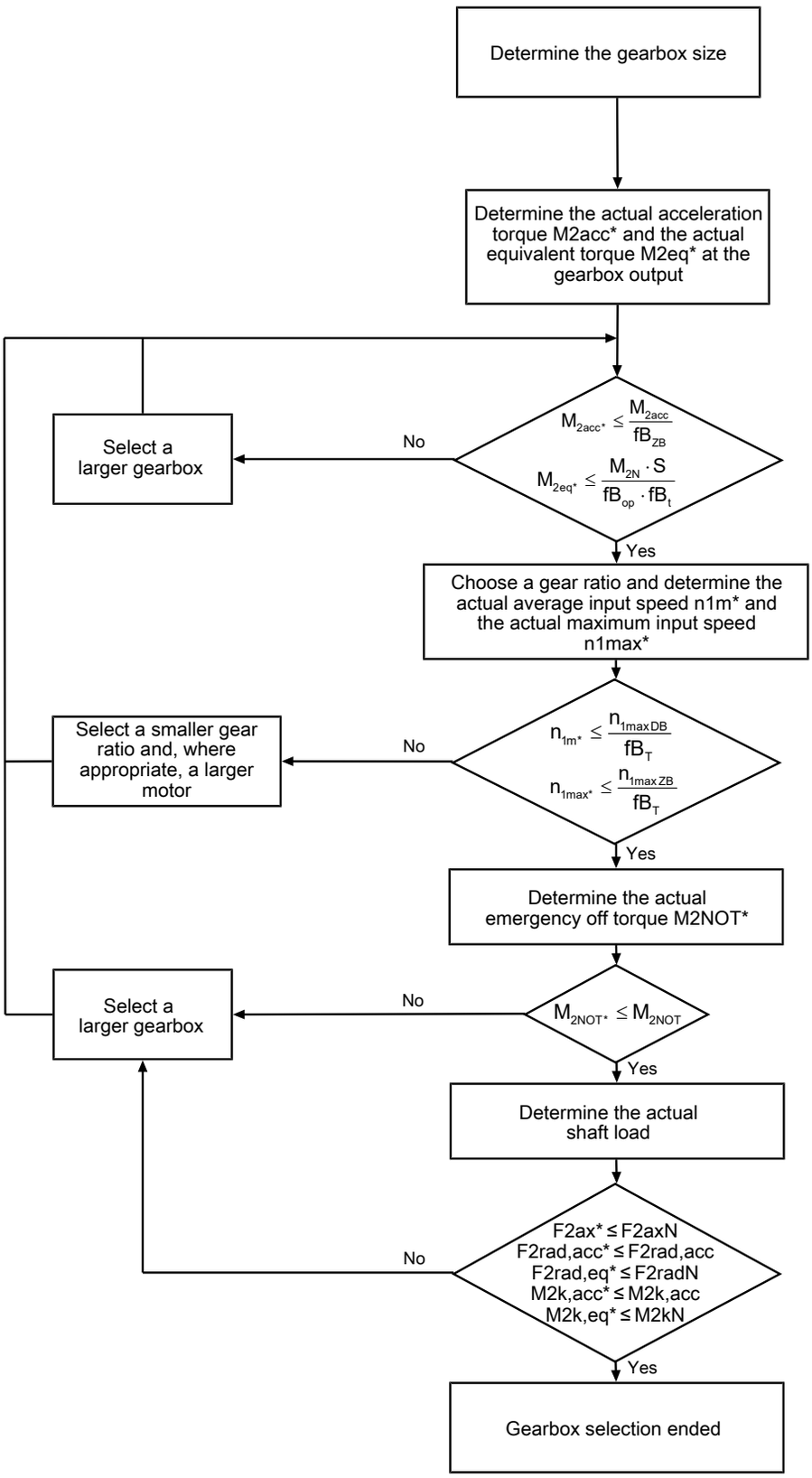

Calculate the forces and tilting torques in the chapter Permitted shaft loads.

Refer to the selection tables for the values for i, n_{1maxDB}, n_{1maxZB}, M_{2acc} (M_{2accHT} for reduced backlash), M_{2NOT}, M_{2N} and S.

The values for fB_T, fB_{op}, fB_t and fB_{ZB} can be found in the corresponding tables in this chapter.

Drive selection for motors

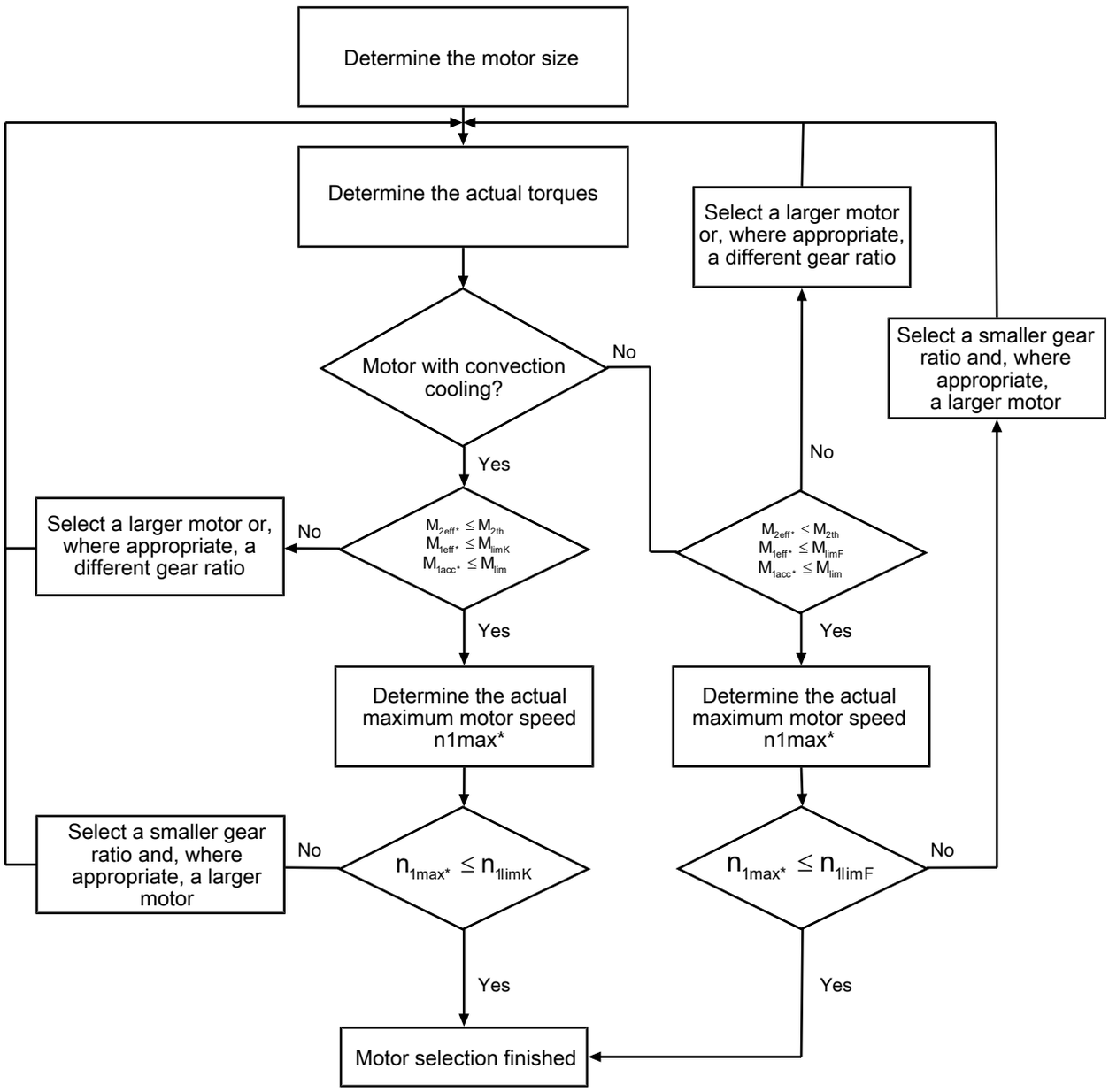

The value for M_{lim}, M_{limK}, M_{limF}, n_{1limK} and n_{1limF} can be found in the motor characteristic curve in the chapter [▶ 17.3]. Note the size, nominal speed n_N and cooling type of the motor.

Example of cyclic operation

The following calculations are based on a representation of the power taken from the output based in accordance with the following example:

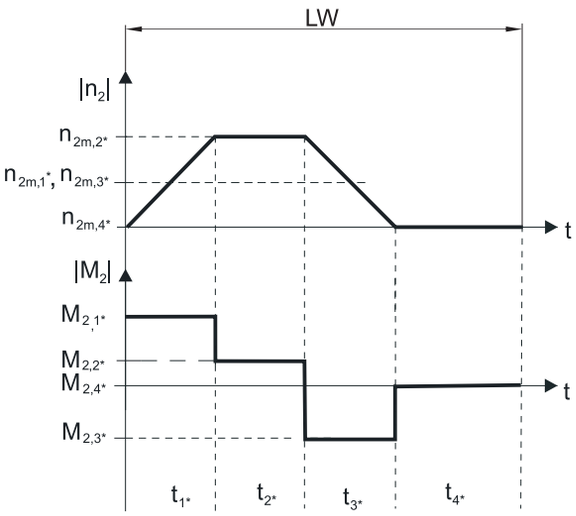

Calculation of the actual maximum acceleration torques

$$M_{2acc*} = J_{tot} \cdot \frac{\Delta n_2}{9{,}55 \cdot \Delta t} + M_{L*}$$

$$M_{1acc*} = \frac{M_{2acc*}}{i \cdot \eta_{get}} + J_1 \cdot \frac{\Delta n_1}{9{,}55 \cdot \Delta t}$$

Calculation of the actual average input speed

$$n_{1m*} = n_{2m*} \cdot i$$

$$n_{2m*} = \frac{\left|n_{2m,1*}\right| \cdot t_{1*} + \ldots + \left|n_{2m,n*}\right| \cdot t_{n*}}{t_{1*} + \ldots + t_{n*}}$$

If $t_{1*} + \ldots + t_{3*} \geq 6$ min, calculate n_{2m*} without the rest phase t_{4*}.

The values for the ratio i can be found in the selection tables.

Calculation of the actual effective torque

$$M_{2eff*} = \sqrt{\frac{t_{1*} \cdot M_{2,1*}{}^2 + \ldots + t_{n*} \cdot M_{2,n*}{}^2}{t_{1*} + \ldots + t_{n*}}}$$

Calculation of the actual emergency off torque

$$M_{2NOT*} = J_{tot} \cdot \frac{\Delta n_2}{9.55 \cdot \Delta t} + M_{L*}$$

Calculation of the actual equivalent torque

$$M_{2eq*} = \sqrt[3]{\frac{\left|n_{2m,1*}\right| \cdot t_{1*} \cdot \left|M_{2,1*}{}^3\right| + \ldots + \left|n_{2m,n*}\right| \cdot t_{n*} \cdot \left|M_{2,n*}{}^3\right|}{\left|n_{2m,1*}\right| \cdot t_{1*} + \ldots + \left|n_{2m,n*}\right| \cdot t_{n*}}}$$

Calculation of the thermal limit torque

Calculate the thermal limit torque M_{2th} for a duty cycle $ED_{10} > 50\%$ and the actual average input speed n_{1m*}. (At $K_{mot,th} \leq 0$ you must reduce the average input speed n_{1m*} accordingly or select another geared motor size.)

$$M_{2th} = M_{op} \cdot i \cdot K_{mot,th}$$

$$K_{mot,th} = 0{,}95 - \frac{a_{th}}{1000} \cdot fB_T \cdot \left(\frac{n_{1m*}}{1000} \right)^3$$

Refer to the selection tables for the values of i and a_{th}.

The values for fB_T can be found in the corresponding table in this chapter.

The value for the torque of the motor at operating point M_{op} with the determined average input speed n_{1m*} can be found in the motor characteristic curve in the chapter [▷ 17.3]. Note the size, nominal speed n_N and cooling type of the motor. The figure below shows an example of reading the torque M_{op} of a motor with convection cooling at the operating point.

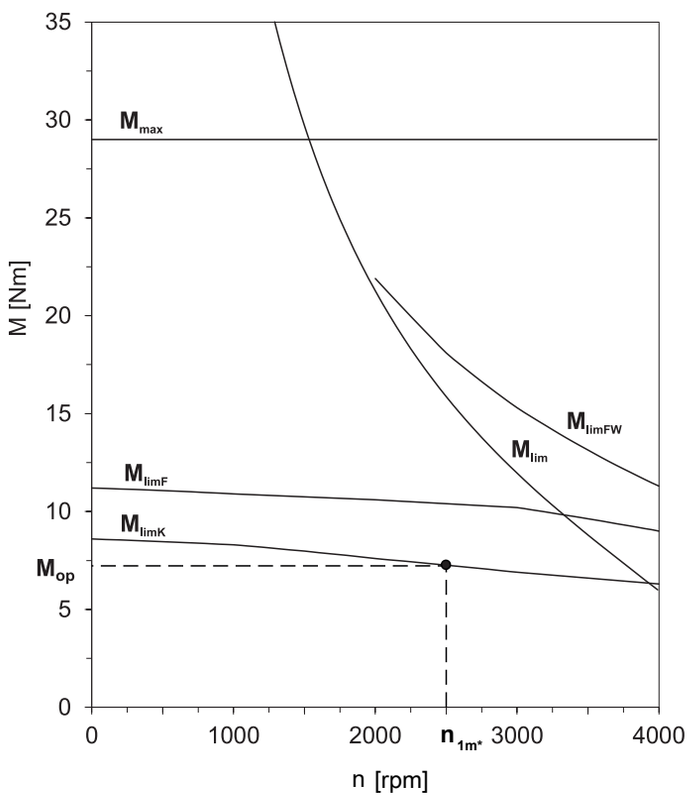

Operating factors

Operating mode	fB_{op}
Uniform continuous operation	1.00
Cyclic operation	1.00
Reversing load cyclic operation	1.00

Run time	fB_t
Daily runtime ≤ 8 h	1.00
Daily runtime ≤ 16 h	1.15
Daily runtime ≤ 24 h	1.20

Cyclic operation	fB_{ZB}
≤ 1000 load changes/hour (LW/h)	1.00
> 1000 load changes/hour (LW/h)	1.15

Temperature		fB_T
Motor cooling	**Surrounding temperature**	
Motor with forced ventilation	≤ 20 °C	0.9
	≤ 30 °C	1.0
	≤ 40 °C	1.15
Motor with convection cooling	≤ 20 °C	1.0
	≤ 30 °C	1.1
	≤ 40 °C	1.25

Notes

- The maximum permitted gearbox temperature (see the "Other product features" chapter) must not be exceeded. Doing so may result in damage to the geared motor.
- For braking from full speed (for example when the power fails or when setting up the machine), note the permitted gearbox torques (M_{2acc}, M_{2NOT}) in the selection tables.

2.6.2 Permitted shaft loads for the output shaft

The values specified in the tables apply to the permitted shaft loads:

- For shaft dimensions in accordance with the catalog
- For output speeds $n_{2m*} \leq 100$ rpm ($F^{2axN} = F_{2ax100}$; $F_{2radN} = F_{2rad100}$; $M_{2kN} = M_{2k100}$)
- Only if radial forces on the gearbox are stabilized by its pilots (housing, flange shaft)

Permitted shaft loads for standard bearing S

Type	z_2 [mm]	F_{2ax100} [N]	$F_{2rad100}$ [N]	$F_{2rad,acc}$ [N]	M_{2k100} [Nm]	$M_{2k,acc}$ [Nm]
P2	17.0	500	1200	1300	34	36
P3	17.5	1000	2500	2500	79	79
P4	18.5	1500	4000	4500	146	164
P5	19.5	2300	6500	7000	315	340
P7	23.0	2900	8500	9000	544	576
P8	24.5	4700	13000	18000	852	1179
P9	33.0	6000	18000	27000	1539	2309

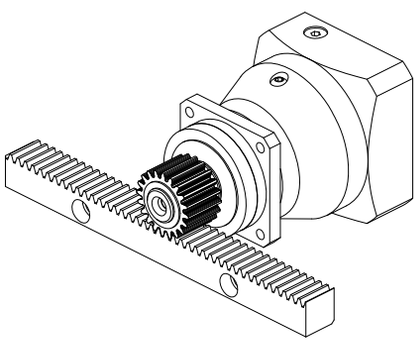

Fig. 1: Recommendation for bearing assignment S (e.g. for straight-cut gearing)

Permitted shaft loads for axially reinforced bearing D

Type	z_2 [mm]	F_{2ax100} [N]	$F_{2rad100}$ [N]	$F_{2rad,acc}$ [N]	M_{2k100} [Nm]	$M_{2k,acc}$ [Nm]
P3	20.0	2500	2750	2750	94	94
P4	22.5	4000	4500	5000	182	203
P5	25.5	6000	7000	8000	382	436
P7	29.0	10000	9500	10000	665	700
P8	32.0	15500	15000	18000	1095	1314
P9	44.0	25000	20000	30000	1930	2895

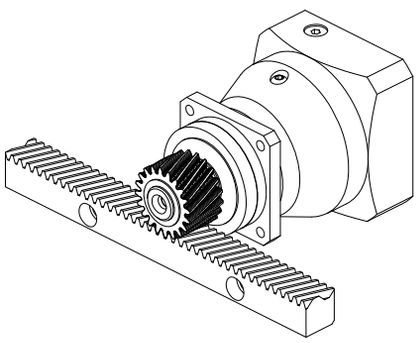

Fig. 2: Recommendation for bearing assignment D (e.g. for helical gearing)

Permitted shaft loads for radially reinforced bearing Z

Type	z_2 [mm]	F_{2ax100} [N]	$F_{2rad100}$ [N]	$F_{2rad,acc}$ [N]	M_{2k100} [Nm]	$M_{2k,acc}$ [Nm]
P3	17.5	600	3000	3000	95	95
P4	18.5	1000	5000	5000	183	183
P5	19.5	1600	8000	8000	388	388
P7	23.0	2000	10000	10000	640	640
P8	24.5	3600	18000	18000	1179	1179
P9	33.0	5000	27000	35000	2309	2993

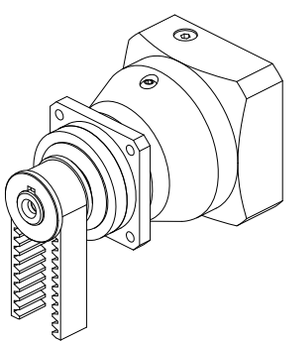

Fig. 3: Recommendation for bearing assignment Z (e.g. for belt drives)

For other output speeds, download diagrams at https://configurator.stoeber.de/en-US/.

The following applies to output speeds n_{2m*} > 100 rpm:

$$F_{2axN} = \frac{F_{2ax100}}{\sqrt[3]{\frac{n_{2m*}}{100\ \text{rpm}}}} \qquad F_{2radN} = \frac{F_{2rad100}}{\sqrt[3]{\frac{n_{2m*}}{100\ \text{rpm}}}} \qquad M_{2kN} = \frac{M_{2k100}}{\sqrt[3]{\frac{n_{2m*}}{100\ \text{rpm}}}}$$

The values for F_{2ax100}, $F_{2rad100}$ and M_{2k100} can be found in the table "Permitted shaft loads" in this chapter.

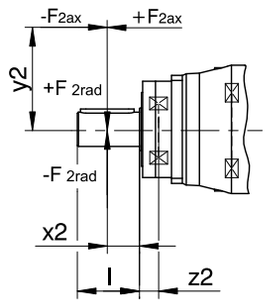

Fig. 4: Force application points

The specified values for $F_{2rad100}$ and $F_{2rad,acc}$ refer to an application of force at the center of the output shaft: $x_2 = l/2$.

Shaft dimensions can be found in the "Dimensional drawings" chapter.

The following applies to other force application points:

$$M_{2k,acc^*} = \frac{2 \cdot F_{2ax^*} \cdot y_2 + F_{2rad,acc^*} \cdot (x_2 + z_2)}{1000}$$

For applications with multiple axial and/or radial forces, you must add the forces as vectors.

In the event of EMERGENCY OFF operation (max. 1000 load changes), you can multiply the permitted forces and torques for F_{2ax100}, $F_{2rad100}$ and M_{2k100} by a factor of two.

Also note the calculation for equivalent values:

$$M_{2k,eq^*} = \sqrt[3]{\frac{|n_{2m,1^*}| \cdot t_{1^*} \cdot |M_{2k,acc,1^*}|^3 + \ldots + |n_{2m,n^*}| \cdot t_{n^*} \cdot |M_{2k,acc,n^*}|^3}{|n_{2m,1^*}| \cdot t_{1^*} + \ldots + |n_{2m,n^*}| \cdot t_{n^*}}}$$

$$F_{2rad,eq^*} = \sqrt[3]{\frac{|n_{2m,1^*}| \cdot t_{1^*} \cdot |F_{2rad,acc,1^*}|^3 + \ldots + |n_{2m,n^*}| \cdot t_{n^*} \cdot |F_{2rad,acc,n^*}|^3}{|n_{2m,1^*}| \cdot t_{1^*} + \ldots + |n_{2m,n^*}| \cdot t_{n^*}}}$$

The following apply to the bearing service life L_{10h} ($ED_{10} \leq 40\%$):

$L_{10h} > 10000$ h with $1 < M_{2kN}/M_{2k^*} < 1.25$

$L_{10h} > 20000$ h with $1.25 < M_{2kN}/M_{2k^*} < 1.5$

$L_{10h} > 30000$ h with $1.5 < M_{2kN}/M_{2k^*}$

For different duty cycles:

$$L_{10h} > L_{10h(ED_{10}=40\%)} \cdot \frac{40\%}{ED_{10}}$$

2.6.3 Recommendation for radial shaft seal rings

For a duty cycle > 60% and higher surrounding temperatures, we recommend radial shaft seal rings made of FKM at the output.

Properties:

- Excellent temperature resistance
- High chemical stability
- Very good resistance to aging
- Excellent resistance in oils and greases
- For use in the food, beverage and pharmaceutical industries

Leak-proofness

Our gearboxes are equipped with high-quality radial shaft seal rings and checked for leaks. However, a leak cannot be fully ruled out over the length of use of a gearbox. If you use a gearbox with goods incompatible with the lubricant, you must take measures to prevent direct contact with the gearbox lubricant in case of a leak.

2.6.4 Reverse operation

To ensure lubrication for circulating gearing parts during cyclic reverse operation from ± 20° to ± 90° at the output, pay careful attention to the position of the output shaft for the horizontal mounting of the gearbox, as shown in the diagrams below. The images show the center position of reverse operation. Cyclic reverse operation ≤ ± 20° on request.

Solid shaft without feather key	Solid shaft with feather key
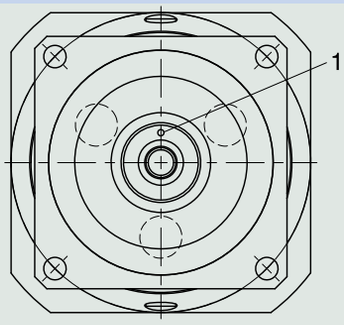	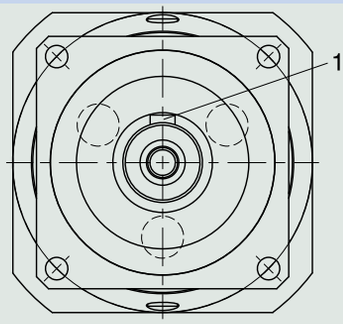
1 Position of the mark: top	1 Position of the feather key: top

Notes

- If you use the solid shaft without a feather key (G), you must note the position of the mark during assembly.
- As an alternative, you can use the solid shaft with a feather key (P). In that case, the feather key functions for position orientation. For a backlash-free connection, also use a clamp.

2.7 Additional documentation

Additional documentation related to the product can be found at
http://www.stoeber.de/en/downloads/

Enter the ID of the documentation in the Search term field.

Documentation	ID
Operating manual gearboxes, geared motors P23 – P93	443356_en
Operating manual for EZ synchronous servo motors	443032_en

3 PH planetary geared motors

Table of contents

3.1 Overview 48

3.2 Selection tables 49

3.3 Dimensional drawings 59

3.3.1 F shaft design (flange shaft) 60

3.4 Type designation 62

3.5 Product description 62

3.5.1 Input options 62

3.5.2 Installation conditions 63

3.5.3 Lubricants 63

3.5.4 Other product features 63

3.5.5 Direction of rotation 63

3.6 Project configuration 63

3.6.1 Drive selection 64

3.6.2 Permitted shaft loads for the output shaft 68

3.6.3 Recommendation for radial shaft seal rings 69

3.6.4 Reverse operation 70

3.7 Additional documentation 70

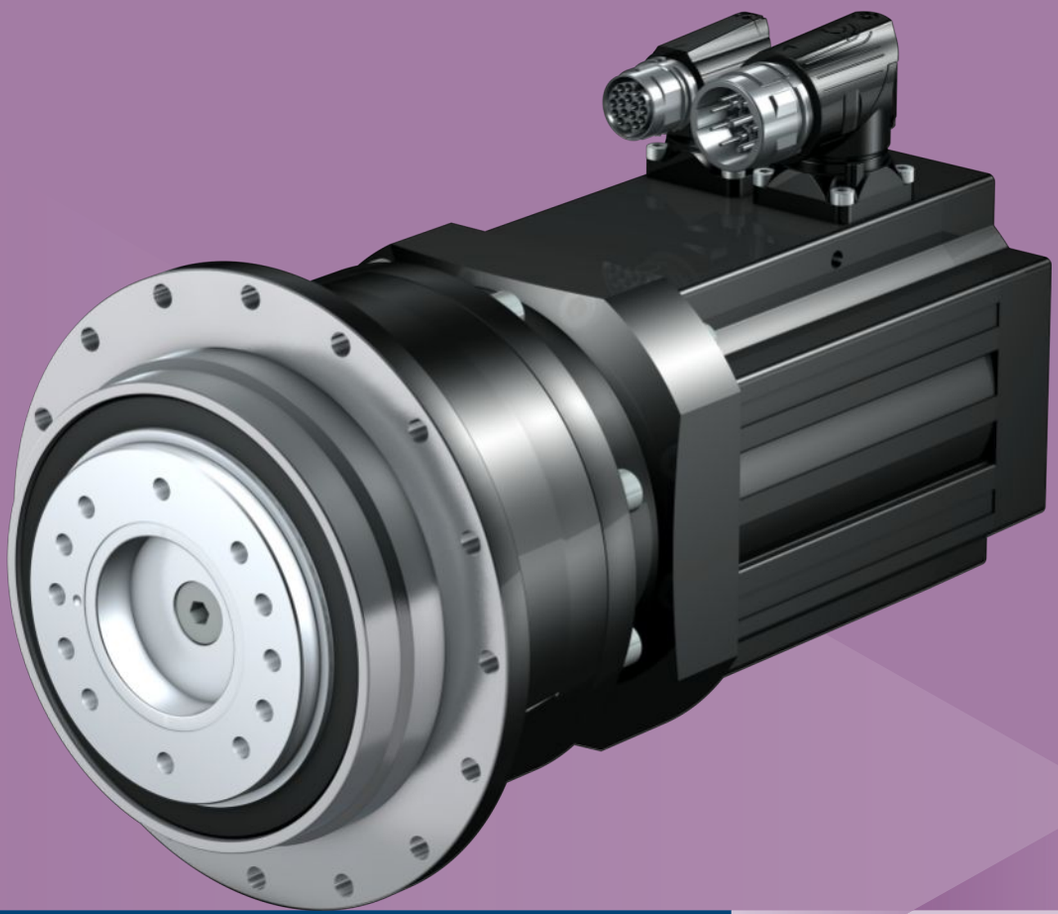

3 Planetary geared motors PH

3.1 Overview

High-performance precision planetary geared motors

Features

Power density	★★★★☆
Backlash	★★★★★
Price category	€€€
Shaft load	★★★★★
Smooth operation	★★★★☆
Torsional stiffness	★★★★☆
Mass moment of inertia	★★★★★
Helical gearing	✓
Maintenance-free	✓
Any mounting position	✓
Continuous operation without cooling	✓
Stiff output bearings due to pretension	✓
Reinforced output bearing (PH3 – PH5)	✓ (optional)
Compact and highly dynamic due to direct motor attachment	✓

Key ★☆☆☆☆ good | ★★★★★ excellent
€ Economy | €€€€€ Premium

Technical data

i	4 – 100
M_{2acc}	24 – 7500 Nm
$\Delta\phi_2$	1 – 4 arcmin
η_{get}	93 – 96 %

3.2 Selection tables

The technical data specified in the selection tables applies to:

- Installation altitudes up to 1000 m above sea level
- Surrounding temperatures from 0 °C to 40 °C
- Drives with convection-cooled motors (e.g. EZ401**U**)

For the technical data on drives with forced ventilated motors (e.g. EZ401**B**), refer to https://configurator.stoeber.de/en-US/.

In the case of the version with a reinforced bearing and gear ratios ≤ 5, the maximum permitted input speed n_{1maxZB} is reduced. You can find values at https://configurator.stoeber.de/en-US/

An explanation of the formula symbols can be found in Chapter [▷ 20.1].

n_{2N} [rpm]	M_{2N} [Nm]	$M_{2,0}$ [Nm]	a_{th}	S	Type	M_{2acc} [Nm]	M_{2accHT} [Nm]	M_{2NOT} [Nm]	i	i_{exakt}	n_{1maxDB} [rpm]	n_{1maxZB} [rpm]	J_1 [kgcm²]	$\Delta\varphi_2$ [arcmin]	$\Delta\varphi_{2red}$ [arcmin]	C_2 [Nm/ arcmin]	m [kg]
PH3 (n_{1N} = 3000 min^{-1}, $M_{2acc,max}$ = 80 Nm)																	
60	43	44	1.4	1.2	PH332_0500 EZ301U	75	75	150	50.00	50/1	6000	8000	0.21	4.0	2.0	12	3.2
75	35	35	1.5	1.4	PH332_0400 EZ301U	67	67	134	40.00	40/1	6000	8000	0.22	4.0	2.0	9.0	3.2
86	30	31	1.6	1.7	PH332_0350 EZ301U	80	85	160	35.00	35/1	6000	8000	0.21	4.0	2.0	14	3.2
107	24	25	1.8	2.1	PH332_0280 EZ301U	73	73	150	28.00	28/1	6000	8000	0.22	4.0	2.0	12	3.2
107	41	44	3.1	1.2	PH332_0280 EZ302U	75	75	150	28.00	28/1	6000	8000	0.32	4.0	2.0	12	3.8
120	22	22	1.9	2.3	PH332_0250 EZ301U	65	65	160	25.00	25/1	6000	8000	0.21	4.0	2.0	14	3.2
120	37	39	3.3	1.4	PH332_0250 EZ302U	80	85	160	25.00	25/1	6000	8000	0.31	4.0	2.0	14	3.8
120	48	51	4.3	1.0	PH332_0250 EZ303U	80	85	160	25.00	25/1	6000	8000	0.42	4.0	2.0	14	4.3
150	17	18	2.4	2.6	PH332_0200 EZ301U	52	52	160	20.00	20/1	5500	8000	0.23	4.0	2.0	14	3.2
150	30	31	4.1	1.5	PH332_0200 EZ302U	80	85	160	20.00	20/1	5500	8000	0.33	4.0	2.0	14	3.8
150	39	41	5.4	1.2	PH332_0200 EZ303U	80	85	160	20.00	20/1	5500	8000	0.44	4.0	2.0	14	4.3
300	8.9	9.1	1.5	3.2	PH331_0100 EZ301U	27	27	120	10.00	10/1	5500	8000	0.21	4.0	2.0	9.2	2.7
300	15	16	2.6	1.9	PH331_0100 EZ302U	48	48	120	10.00	10/1	5500	8000	0.31	4.0	2.0	9.2	3.3
300	20	21	3.3	1.4	PH331_0100 EZ303U	60	60	120	10.00	10/1	5500	8000	0.42	4.0	2.0	9.2	3.8
300	27	29	4.5	1.1	PH331_0100 EZ401U	60	60	120	10.00	10/1	5500	8000	0.95	4.0	2.0	9.2	5.2
429	11	11	2.9	3.7	PH331_0070 EZ302U	34	34	150	7.000	7/1	5000	8000	0.33	4.0	2.0	13	3.3
429	14	15	3.7	2.8	PH331_0070 EZ303U	47	47	150	7.000	7/1	5000	8000	0.44	4.0	2.0	13	3.8
429	19	20	5.0	2.1	PH331_0070 EZ401U	57	57	150	7.000	7/1	5000	8000	0.97	4.0	2.0	13	5.2
429	32	35	8.4	1.2	PH331_0070 EZ402U	75	77	150	7.000	7/1	5000	8000	1.7	4.0	2.0	13	6.3
600	9.9	11	5.6	4.0	PH331_0050 EZ303U	34	34	160	5.000	5/1	4000	8000	0.48	4.0	2.0	15	3.8
600	13	14	7.5	2.9	PH331_0050 EZ401U	41	41	160	5.000	5/1	4000	8000	1.0	4.0	2.0	15	5.2
600	23	25	13	1.7	PH331_0050 EZ402U	77	77	160	5.000	5/1	4000	8000	1.7	4.0	2.0	15	6.3
PH3 (n_{1N} = 6000 min^{-1}, $M_{2acc,max}$ = 80 Nm)																	
86	26	29	0.6	1.7	PH332_0700 EZ202U	69	69	138	70.00	70/1	6000	8000	0.14	4.0	2.0	12	3.1
86	40	45	0.8	1.1	PH332_0700 EZ203U	69	69	138	70.00	70/1	6000	8000	0.18	4.0	2.0	12	3.4
120	19	20	0.7	2.2	PH332_0500 EZ202U	69	69	150	50.00	50/1	6000	8000	0.15	4.0	2.0	12	3.1
120	28	32	1.1	1.4	PH332_0500 EZ203U	75	75	150	50.00	50/1	6000	8000	0.19	4.0	2.0	12	3.4
150	15	16	0.8	2.8	PH332_0400 EZ202U	55	55	134	40.00	40/1	6000	8000	0.16	4.0	2.0	9.0	3.1
150	23	26	1.2	1.8	PH332_0400 EZ203U	67	67	134	40.00	40/1	6000	8000	0.20	4.0	2.0	9.0	3.4
150	33	35	1.8	1.2	PH332_0400 EZ301U	67	67	134	40.00	40/1	6000	8000	0.22	4.0	2.0	9.0	3.2
171	13	14	0.8	3.5	PH332_0350 EZ202U	48	48	160	35.00	35/1	6000	8000	0.15	4.0	2.0	14	3.1
171	20	22	1.2	2.3	PH332_0350 EZ203U	80	85	160	35.00	35/1	6000	8000	0.19	4.0	2.0	14	3.4
171	29	31	1.7	1.6	PH332_0350 EZ301U	80	85	160	35.00	35/1	6000	8000	0.21	4.0	2.0	14	3.2
214	10	11	0.9	4.0	PH332_0280 EZ202U	39	39	150	28.00	28/1	6000	8000	0.16	4.0	2.0	12	3.1
214	16	18	1.4	2.6	PH332_0280 EZ203U	70	70	150	28.00	28/1	6000	8000	0.20	4.0	2.0	12	3.4
214	23	25	2.1	1.8	PH332_0280 EZ301U	73	73	150	28.00	28/1	6000	8000	0.22	4.0	2.0	12	3.2
214	39	44	3.6	1.1	PH332_0280 EZ302U	75	75	150	28.00	28/1	6000	8000	0.32	4.0	2.0	12	3.8
240	9.3	10	0.9	4.8	PH332_0250 EZ202U	34	34	160	25.00	25/1	6000	8000	0.15	4.0	2.0	14	3.1
240	14	16	1.4	3.2	PH332_0250 EZ203U	63	63	160	25.00	25/1	6000	8000	0.19	4.0	2.0	14	3.4
240	21	22	2.1	2.2	PH332_0250 EZ301U	65	65	160	25.00	25/1	6000	8000	0.21	4.0	2.0	14	3.2
240	35	39	3.5	1.3	PH332_0250 EZ302U	80	85	160	25.00	25/1	6000	8000	0.31	4.0	2.0	14	3.8
300	11	13	1.9	3.3	PH332_0200 EZ203U	50	50	160	20.00	20/1	5500	8000	0.20	4.0	2.0	14	3.4
300	17	18	2.7	2.3	PH332_0200 EZ301U	52	52	160	20.00	20/1	5500	8000	0.23	4.0	2.0	14	3.2
300	28	31	4.6	1.4	PH332_0200 EZ302U	80	85	160	20.00	20/1	5500	8000	0.33	4.0	2.0	14	3.8
300	36	42	6.0	1.0	PH332_0200 EZ303U	80	85	160	20.00	20/1	5500	8000	0.44	4.0	2.0	14	4.3
600	8.5	9.1	1.8	2.7	PH331_0100 EZ301U	27	27	120	10.00	10/1	5500	8000	0.21	4.0	2.0	9.2	2.7
600	14	16	3.0	1.6	PH331_0100 EZ302U	48	48	120	10.00	10/1	5500	8000	0.31	4.0	2.0	9.2	3.3
600	19	22	4.0	1.2	PH331_0100 EZ303U	60	60	120	10.00	10/1	5500	8000	0.42	4.0	2.0	9.2	3.8
600	22	27	4.7	1.0	PH331_0100 EZ401U	60	60	120	10.00	10/1	5500	8000	0.95	4.0	2.0	9.2	5.2
857	10	11	3.4	3.1	PH331_0070 EZ302U	34	34	150	7.000	7/1	5000	8000	0.33	4.0	2.0	13	3.3
857	13	15	4.4	2.4	PH331_0070 EZ303U	47	47	150	7.000	7/1	5000	8000	0.44	4.0	2.0	13	3.8

n_{2N} [rpm]	M_{2N} [Nm]	$M_{2,0}$ [Nm]	a_{th}	S	Type	M_{2acc} [Nm]	M_{2accHT} [Nm]	M_{2NOT} [Nm]	i	i_{exakt}	n_{1maxDB} [rpm]	n_{1maxZB} [rpm]	J_1 [kgcm²]	$\Delta\varphi_2$ [arcmin]	$\Delta\varphi_{2red}$ [arcmin]	C_2 [Nm/ arcmin]	m [kg]
PH3 (n_{1N} = 6000 min^{-1}, $M_{2acc,max}$ = 80 Nm)																	
857	15	19	5.2	2.0	PH331_0070 EZ401U	57	57	150	7.000	7/1	5000	8000	0.97	4.0	2.0	13	5.2
857	24	33	7.9	1.3	PH331_0070 EZ402U	75	77	150	7.000	7/1	5000	8000	1.7	4.0	2.0	13	6.3
1200	7.2	8.1	5.1	4.3	PH331_0050 EZ302U	24	24	160	5.000	5/1	4000	8000	0.37	4.0	2.0	15	3.3
1200	9.4	11	6.6	3.3	PH331_0050 EZ303U	34	34	160	5.000	5/1	4000	8000	0.48	4.0	2.0	15	3.8
1200	11	13	7.8	2.8	PH331_0050 EZ401U	41	41	160	5.000	5/1	4000	8000	1.0	4.0	2.0	15	5.2
1200	17	24	12	1.9	PH331_0050 EZ402U	77	77	160	5.000	5/1	4000	8000	1.7	4.0	2.0	15	6.3
PH4 (n_{1N} = 3000 min^{-1}, $M_{2acc,max}$ = 170 Nm)																	
43	61	62	0.6	1.8	PH432_0700 EZ301U	158	164	316	70.00	70/1	4500	8000	0.22	3.0	1.0	27	5.7
43	104	109	1.0	1.0	PH432_0700 EZ302U	158	164	316	70.00	70/1	4500	8000	0.32	3.0	1.0	27	6.3
60	43	44	0.7	2.5	PH432_0500 EZ301U	130	130	318	50.00	50/1	4500	8000	0.25	3.0	1.0	31	5.7
60	74	78	1.2	1.4	PH432_0500 EZ302U	159	174	318	50.00	50/1	4500	8000	0.35	3.0	1.0	31	6.3
60	96	102	1.6	1.1	PH432_0500 EZ303U	159	174	318	50.00	50/1	4500	8000	0.46	3.0	1.0	31	6.8
75	35	35	0.8	2.9	PH432_0400 EZ301U	104	104	310	40.00	40/1	4500	8000	0.28	3.0	1.0	30	5.7
75	59	62	1.4	1.7	PH432_0400 EZ302U	155	169	310	40.00	40/1	4500	8000	0.38	3.0	1.0	30	6.3
75	77	81	1.9	1.3	PH432_0400 EZ303U	155	169	310	40.00	40/1	4500	8000	0.49	3.0	1.0	30	6.8
86	30	31	0.9	3.5	PH432_0350 EZ301U	91	91	320	35.00	35/1	4500	8000	0.25	3.0	1.0	32	5.7
86	52	55	1.5	2.1	PH432_0350 EZ302U	160	163	320	35.00	35/1	4500	8000	0.35	3.0	1.0	32	6.3
86	67	71	1.9	1.6	PH432_0350 EZ303U	160	174	320	35.00	35/1	4500	8000	0.46	3.0	1.0	32	6.8
86	91	98	2.6	1.2	PH432_0350 EZ401U	160	174	320	35.00	35/1	4500	8000	0.99	3.0	1.0	32	8.2
107	24	25	1.1	3.9	PH432_0280 EZ301U	73	73	312	28.00	28/1	4500	8000	0.29	3.0	1.0	31	5.7
107	41	44	1.9	2.3	PH432_0280 EZ302U	130	130	312	28.00	28/1	4500	8000	0.39	3.0	1.0	31	6.3
107	54	57	2.4	1.8	PH432_0280 EZ303U	160	173	312	28.00	28/1	4500	8000	0.50	3.0	1.0	31	6.8
107	73	78	3.3	1.3	PH432_0280 EZ401U	160	173	312	28.00	28/1	4500	8000	1.0	3.0	1.0	31	8.2
120	22	22	1.1	4.6	PH432_0250 EZ301U	65	65	322	25.00	25/1	4500	8000	0.26	3.0	1.0	32	5.7
120	37	39	1.9	2.7	PH432_0250 EZ302U	116	116	322	25.00	25/1	4500	8000	0.36	3.0	1.0	32	6.3
120	48	51	2.4	2.1	PH432_0250 EZ303U	161	163	322	25.00	25/1	4500	8000	0.47	3.0	1.0	32	6.8
120	65	70	3.3	1.5	PH432_0250 EZ401U	161	174	322	25.00	25/1	4500	8000	1.0	3.0	1.0	32	8.2
150	30	31	2.2	3.2	PH432_0200 EZ302U	93	93	299	20.00	20/1	4000	8000	0.36	3.0	1.0	32	6.3
150	39	41	2.9	2.5	PH432_0200 EZ303U	130	130	299	20.00	20/1	4000	8000	0.47	3.0	1.0	32	6.8
150	52	56	3.9	1.8	PH432_0200 EZ401U	150	150	299	20.00	20/1	4000	8000	1.0	3.0	1.0	32	8.2
150	87	97	6.5	1.1	PH432_0200 EZ402U	150	150	299	20.00	20/1	4000	8000	1.7	3.0	1.0	32	9.3
188	24	25	2.6	3.8	PH432_0160 EZ302U	74	74	312	16.00	16/1	4000	8000	0.41	3.0	1.0	31	6.3
188	31	33	3.4	2.9	PH432_0160 EZ303U	104	104	312	16.00	16/1	4000	8000	0.52	3.0	1.0	31	6.8
188	42	45	4.6	2.2	PH432_0160 EZ401U	126	126	312	16.00	16/1	4000	8000	1.0	3.0	1.0	31	8.2
188	70	77	7.6	1.3	PH432_0160 EZ402U	160	173	312	16.00	16/1	4000	8000	1.7	3.0	1.0	31	9.3
300	27	29	2.4	2.2	PH431_0100 EZ401U	82	82	230	10.00	10/1	3500	7000	1.0	3.0	1.0	21	7.0
300	41	45	3.7	1.4	PH431_0100 EZ501U	115	115	230	10.00	10/1	3500	7000	3.0	3.0	1.0	21	8.0
300	45	50	4.1	1.3	PH431_0100 EZ402U	115	115	230	10.00	10/1	3500	7000	1.7	3.0	1.0	21	8.1
429	19	20	3.0	3.9	PH431_0070 EZ401U	57	57	320	7.000	7/1	3200	6000	1.1	3.0	1.0	31	7.0
429	29	32	4.6	2.6	PH431_0070 EZ501U	108	108	320	7.000	7/1	3200	6000	3.1	3.0	1.0	31	8.0
429	32	35	5.0	2.4	PH431_0070 EZ402U	108	108	320	7.000	7/1	3200	6000	1.8	3.0	1.0	31	8.1
429	46	58	7.4	1.6	PH431_0070 EZ404U	160	175	320	7.000	7/1	3200	6000	3.1	3.0	1.0	31	10
429	50	54	7.9	1.5	PH431_0070 EZ502U	160	175	320	7.000	7/1	3200	6000	5.4	3.0	1.0	31	9.5
429	65	75	10	1.1	PH431_0070 EZ503U	160	175	320	7.000	7/1	3200	6000	7.7	3.0	1.0	31	11
600	21	23	6.9	3.6	PH431_0050 EZ501U	77	77	344	5.000	5/1	3000	6000	3.2	3.0	1.0	37	8.0
600	23	25	7.5	3.3	PH431_0050 EZ402U	77	77	344	5.000	5/1	3000	6000	1.9	3.0	1.0	37	8.1
600	33	41	11	2.2	PH431_0050 EZ404U	139	139	344	5.000	5/1	3000	6000	3.3	3.0	1.0	37	10
600	36	38	12	2.1	PH431_0050 EZ502U	149	149	344	5.000	5/1	3000	6000	5.5	3.0	1.0	37	9.5
600	47	53	16	1.6	PH431_0050 EZ503U	172	189	344	5.000	5/1	3000	6000	7.9	3.0	1.0	37	11
600	65	77	22	1.1	PH431_0050 EZ505U	172	189	344	5.000	5/1	3000	6000	12	3.0	1.0	37	14
750	17	18	9.0	4.5	PH431_0040 EZ501U	61	61	273	4.000	4/1	2600	5000	3.4	3.0	1.0	39	8.0
750	18	20	9.8	4.1	PH431_0040 EZ402U	61	61	273	4.000	4/1	2600	5000	2.1	3.0	1.0	39	8.1
750	26	33	14	2.8	PH431_0040 EZ404U	111	111	273	4.000	4/1	2600	5000	3.5	3.0	1.0	39	10
750	28	31	15	2.6	PH431_0040 EZ502U	119	119	273	4.000	4/1	2600	5000	5.7	3.0	1.0	39	9.5
750	37	43	20	2.0	PH431_0040 EZ503U	136	165	273	4.000	4/1	2600	5000	8.1	3.0	1.0	39	11
750	52	61	28	1.4	PH431_0040 EZ505U	136	189	273	4.000	4/1	2600	5000	13	3.0	1.0	39	14
PH4 (n_{1N} = 4500 min^{-1}, $M_{2acc,max}$ = 170 Nm)																	
643	64	103	12	1.0	PH431_0070 EZ505U	160	175	320	7.000	7/1	3200	6000	12	3.0	1.0	31	14
900	46	73	17	1.4	PH431_0050 EZ505U	172	189	344	5.000	5/1	3000	6000	12	3.0	1.0	37	14
1125	36	59	23	1.8	PH431_0040 EZ505U	136	189	273	4.000	4/1	2600	5000	13	3.0	1.0	39	14
PH4 (n_{1N} = 6000 min^{-1}, $M_{2acc,max}$ = 170 Nm)																	
86	58	62	0.7	1.5	PH432_0700 EZ301U	158	164	316	70.00	70/1	4500	8000	0.22	3.0	1.0	27	5.7
120	41	44	0.9	2.1	PH432_0500 EZ301U	130	130	318	50.00	50/1	4500	8000	0.25	3.0	1.0	31	5.7
120	70	78	1.5	1.2	PH432_0500 EZ302U	159	174	318	50.00	50/1	4500	8000	0.35	3.0	1.0	31	6.3
150	33	35	1.0	2.4	PH432_0400 EZ301U	104	104	310	40.00	40/1	4500	8000	0.28	3.0	1.0	30	5.7

n_{2N} [rpm]	M_{2N} [Nm]	$M_{2,0}$ [Nm]	a_{th}	S	Type	M_{2acc} [Nm]	M_{2accHT} [Nm]	M_{2NOT} [Nm]	i	i_{exakt}	n_{1maxDB} [rpm]	n_{1maxZB} [rpm]	J_1 [kgcm²]	$\Delta\varphi_2$ [arcmin]	$\Delta\varphi_{2red}$ [arcmin]	C_2 [Nm/ arcmin]	m [kg]
PH4 (n_{1N} = 6000 min^{-1}, $M_{2acc,max}$ = 170 Nm)																	
150	56	62	1.7	1.4	PH432_0400 EZ302U	155	169	310	40.00	40/1	4500	8000	0.38	3.0	1.0	30	6.3
150	73	84	2.2	1.1	PH432_0400 EZ303U	155	169	310	40.00	40/1	4500	8000	0.49	3.0	1.0	30	6.8
171	29	31	1.0	2.9	PH432_0350 EZ301U	91	91	320	35.00	35/1	4500	8000	0.25	3.0	1.0	32	5.7
171	49	55	1.7	1.7	PH432_0350 EZ302U	160	163	320	35.00	35/1	4500	8000	0.35	3.0	1.0	32	6.3
171	64	73	2.3	1.3	PH432_0350 EZ303U	160	174	320	35.00	35/1	4500	8000	0.46	3.0	1.0	32	6.8
171	75	91	2.7	1.1	PH432_0350 EZ401U	160	174	320	35.00	35/1	4500	8000	0.99	3.0	1.0	32	8.2
214	23	25	1.2	3.7	PH432_0280 EZ301U	73	73	312	28.00	28/1	4500	8000	0.29	3.0	1.0	31	5.7
214	39	44	2.0	2.2	PH432_0280 EZ302U	130	130	312	28.00	28/1	4500	8000	0.39	3.0	1.0	31	6.3
214	51	59	2.6	1.7	PH432_0280 EZ303U	160	173	312	28.00	28/1	4500	8000	0.50	3.0	1.0	31	6.8
214	60	73	3.0	1.4	PH432_0280 EZ401U	160	173	312	28.00	28/1	4500	8000	1.0	3.0	1.0	31	8.2
240	21	22	1.2	4.1	PH432_0250 EZ301U	65	65	322	25.00	25/1	4500	8000	0.26	3.0	1.0	32	5.7
240	35	39	2.1	2.4	PH432_0250 EZ302U	116	116	322	25.00	25/1	4500	8000	0.36	3.0	1.0	32	6.3
240	46	52	2.7	1.9	PH432_0250 EZ303U	161	163	322	25.00	25/1	4500	8000	0.47	3.0	1.0	32	6.8
240	53	65	3.2	1.6	PH432_0250 EZ401U	161	174	322	25.00	25/1	4500	8000	1.0	3.0	1.0	32	8.2
240	81	114	4.8	1.0	PH432_0250 EZ402U	161	174	322	25.00	25/1	4500	8000	1.7	3.0	1.0	32	9.3
300	28	31	2.3	3.0	PH432_0200 EZ302U	93	93	299	20.00	20/1	4000	8000	0.36	3.0	1.0	32	6.3
300	36	42	3.0	2.3	PH432_0200 EZ303U	130	130	299	20.00	20/1	4000	8000	0.47	3.0	1.0	32	6.8
300	43	52	3.5	2.0	PH432_0200 EZ401U	150	150	299	20.00	20/1	4000	8000	1.0	3.0	1.0	32	8.2
300	65	91	5.4	1.3	PH432_0200 EZ402U	150	150	299	20.00	20/1	4000	8000	1.7	3.0	1.0	32	9.3
375	22	25	2.8	3.5	PH432_0160 EZ302U	74	74	312	16.00	16/1	4000	8000	0.41	3.0	1.0	31	6.3
375	29	33	3.6	2.7	PH432_0160 EZ303U	104	104	312	16.00	16/1	4000	8000	0.52	3.0	1.0	31	6.8
375	34	42	4.3	2.3	PH432_0160 EZ401U	126	126	312	16.00	16/1	4000	8000	1.0	3.0	1.0	31	8.2
375	52	73	6.5	1.5	PH432_0160 EZ402U	160	173	312	16.00	16/1	4000	8000	1.7	3.0	1.0	31	9.3
600	22	27	2.5	2.1	PH431_0100 EZ401U	82	82	230	10.00	10/1	3500	7000	1.0	3.0	1.0	21	7.0
600	33	42	3.7	1.4	PH431_0100 EZ501U	115	115	230	10.00	10/1	3500	7000	3.0	3.0	1.0	21	8.0
600	34	47	3.8	1.4	PH431_0100 EZ402U	115	115	230	10.00	10/1	3500	7000	1.7	3.0	1.0	21	8.1
857	15	19	3.1	3.8	PH431_0070 EZ401U	57	57	320	7.000	7/1	3200	6000	1.1	3.0	1.0	31	7.0
857	23	30	4.6	2.6	PH431_0070 EZ501U	108	108	320	7.000	7/1	3200	6000	3.1	3.0	1.0	31	8.0
857	24	33	4.7	2.5	PH431_0070 EZ402U	108	108	320	7.000	7/1	3200	6000	1.8	3.0	1.0	31	8.1
857	35	52	7.0	1.7	PH431_0070 EZ502U	160	175	320	7.000	7/1	3200	6000	5.4	3.0	1.0	31	9.5
857	39	56	7.8	1.5	PH431_0070 EZ404U	160	175	320	7.000	7/1	3200	6000	3.1	3.0	1.0	31	10
857	42	71	8.4	1.4	PH431_0070 EZ503U	160	175	320	7.000	7/1	3200	6000	7.7	3.0	1.0	31	11
1200	16	21	6.9	3.6	PH431_0050 EZ501U	77	77	344	5.000	5/1	3000	6000	3.2	3.0	1.0	37	8.0
1200	17	24	7.1	3.5	PH431_0050 EZ402U	77	77	344	5.000	5/1	3000	6000	1.9	3.0	1.0	37	8.1
1200	25	37	10	2.4	PH431_0050 EZ502U	149	149	344	5.000	5/1	3000	6000	5.5	3.0	1.0	37	9.5
1200	28	40	12	2.1	PH431_0050 EZ404U	139	139	344	5.000	5/1	3000	6000	3.3	3.0	1.0	37	10
1200	30	51	13	2.0	PH431_0050 EZ503U	172	189	344	5.000	5/1	3000	6000	7.9	3.0	1.0	37	11
PH5 (n_{1N} = 3000 min^{-1}, $M_{2acc,max}$ = 390 Nm)																	
43	182	195	0.8	1.5	PH532_0700 EZ401U	370	387	705	70.00	70/1	4000	8000	1.0	3.0	1.0	70	11
60	130	140	1.0	2.0	PH532_0500 EZ401U	385	395	705	50.00	50/1	4000	8000	1.1	3.0	1.0	79	11
60	200	219	1.6	1.3	PH532_0500 EZ501U	385	400	705	50.00	50/1	4000	8000	3.0	3.0	1.0	79	12
60	219	242	1.7	1.2	PH532_0500 EZ402U	385	400	705	50.00	50/1	4000	8000	1.8	3.0	1.0	79	12
75	104	112	1.4	2.0	PH532_0400 EZ401U	316	316	696	40.00	40/1	4000	8000	1.2	3.0	1.0	74	11
75	160	175	2.1	1.3	PH532_0400 EZ501U	355	356	696	40.00	40/1	4000	8000	3.1	3.0	1.0	74	12
75	175	193	2.3	1.2	PH532_0400 EZ402U	355	356	696	40.00	40/1	4000	8000	1.9	3.0	1.0	74	12
86	91	98	1.2	2.9	PH532_0350 EZ401U	277	277	705	35.00	35/1	4000	8000	1.1	3.0	1.0	84	11
86	140	153	1.8	1.9	PH532_0350 EZ501U	385	400	705	35.00	35/1	4000	8000	3.1	3.0	1.0	84	12
86	153	169	2.0	1.7	PH532_0350 EZ402U	385	400	705	35.00	35/1	4000	8000	1.8	3.0	1.0	84	12
86	225	280	2.9	1.2	PH532_0350 EZ404U	385	400	705	35.00	35/1	4000	8000	3.1	3.0	1.0	84	14
86	241	260	3.1	1.1	PH532_0350 EZ502U	385	400	705	35.00	35/1	4000	8000	5.4	3.0	1.0	84	13
107	73	78	1.4	3.3	PH532_0280 EZ401U	221	221	696	28.00	28/1	4000	8000	1.2	3.0	1.0	80	11
107	112	122	2.2	2.1	PH532_0280 EZ501U	355	387	696	28.00	28/1	4000	8000	3.1	3.0	1.0	80	12
107	122	135	2.4	2.0	PH532_0280 EZ402U	355	387	696	28.00	28/1	4000	8000	1.9	3.0	1.0	80	12
107	180	224	3.5	1.3	PH532_0280 EZ404U	355	387	696	28.00	28/1	4000	8000	3.2	3.0	1.0	80	14
107	193	208	3.8	1.2	PH532_0280 EZ502U	355	387	696	28.00	28/1	4000	8000	5.4	3.0	1.0	80	13
120	65	70	1.4	4.0	PH532_0250 EZ401U	198	198	705	25.00	25/1	3700	7500	1.1	3.0	1.0	85	11
120	100	109	2.2	2.6	PH532_0250 EZ501U	372	372	705	25.00	25/1	3700	7500	3.1	3.0	1.0	85	12
120	109	121	2.4	2.4	PH532_0250 EZ402U	372	372	705	25.00	25/1	3700	7500	1.8	3.0	1.0	85	12
120	160	200	3.5	1.6	PH532_0250 EZ404U	385	400	705	25.00	25/1	3700	7500	3.2	3.0	1.0	85	14
120	172	186	3.7	1.5	PH532_0250 EZ502U	385	400	705	25.00	25/1	3700	7500	5.4	3.0	1.0	85	13
120	226	258	4.9	1.2	PH532_0250 EZ503U	385	400	705	25.00	25/1	3700	7500	7.8	3.0	1.0	85	15
150	52	56	1.6	4.8	PH532_0200 EZ401U	158	158	705	20.00	20/1	3500	7000	1.1	3.0	1.0	86	11
150	80	87	2.5	3.1	PH532_0200 EZ501U	298	298	705	20.00	20/1	3500	7000	3.1	3.0	1.0	86	12
150	87	97	2.7	2.9	PH532_0200 EZ402U	298	298	705	20.00	20/1	3500	7000	1.8	3.0	1.0	86	12
150	128	160	4.0	1.9	PH532_0200 EZ404U	370	387	705	20.00	20/1	3500	7000	3.2	3.0	1.0	86	14

n_{2N} [rpm]	M_{2N} [Nm]	$M_{2,0}$ [Nm]	a_{th}	S	Type	M_{2acc} [Nm]	M_{2accHT} [Nm]	M_{2NOT} [Nm]	i	i_{exakt}	n_{1maxDB} [rpm]	n_{1maxZB} [rpm]	J_1 [kgcm²]	$\Delta\varphi_2$ [arcmin]	$\Delta\varphi_{2red}$ [arcmin]	C_2 [Nm/ arcmin]	m [kg]
PH5 (n_{1N} = 3000 min^{-1}, $M_{2acc,max}$ = 390 Nm)																	
150	138	149	4.3	1.8	PH532_0200 EZ502U	370	387	705	20.00	20/1	3500	7000	5.4	3.0	1.0	86	13
150	180	206	5.6	1.4	PH532_0200 EZ503U	370	387	705	20.00	20/1	3500	7000	7.8	3.0	1.0	86	15
188	64	70	3.0	3.6	PH532_0160 EZ501U	238	238	696	16.00	16/1	3500	7000	3.2	3.0	1.0	83	12
188	70	77	3.3	3.3	PH532_0160 EZ402U	238	238	696	16.00	16/1	3500	7000	1.9	3.0	1.0	83	12
188	103	128	4.9	2.2	PH532_0160 EZ404U	355	355	696	16.00	16/1	3500	7000	3.3	3.0	1.0	83	14
188	110	119	5.2	2.1	PH532_0160 EZ502U	355	355	696	16.00	16/1	3500	7000	5.5	3.0	1.0	83	13
188	144	165	6.9	1.6	PH532_0160 EZ503U	355	355	696	16.00	16/1	3500	7000	7.9	3.0	1.0	83	15
188	201	238	9.6	1.1	PH532_0160 EZ505U	355	355	696	16.00	16/1	3500	7000	12	3.0	1.0	83	18
300	41	45	1.7	3.5	PH531_0100 EZ501U	154	154	575	10.00	10/1	3300	6500	3.2	3.0	1.0	53	9.9
300	71	77	3.0	2.0	PH531_0100 EZ502U	288	288	575	10.00	10/1	3300	6500	5.5	3.0	1.0	53	11
300	71	80	3.0	2.0	PH531_0100 EZ701U	192	192	575	10.00	10/1	3300	6500	8.8	3.0	1.0	53	13
300	93	107	3.9	1.5	PH531_0100 EZ503U	288	288	575	10.00	10/1	3300	6500	7.8	3.0	1.0	53	13
300	115	138	4.8	1.2	PH531_0100 EZ702U	288	288	575	10.00	10/1	3300	6500	14	3.0	1.0	53	16
300	130	154	5.4	1.1	PH531_0100 EZ505U	288	288	575	10.00	10/1	3300	6500	12	3.0	1.0	53	16
429	50	54	3.6	3.7	PH531_0070 EZ502U	208	208	705	7.000	7/1	3000	6000	5.8	3.0	1.0	77	11
429	50	56	3.6	3.7	PH531_0070 EZ701U	134	134	705	7.000	7/1	3000	6000	9.1	3.0	1.0	77	13
429	65	75	4.7	2.8	PH531_0070 EZ503U	289	289	705	7.000	7/1	3000	6000	8.1	3.0	1.0	77	13
429	81	97	5.8	2.3	PH531_0070 EZ702U	276	276	705	7.000	7/1	3000	6000	14	3.0	1.0	77	16
429	91	108	6.5	2.0	PH531_0070 EZ505U	370	387	705	7.000	7/1	3000	6000	13	3.0	1.0	77	16
429	111	140	7.9	1.7	PH531_0070 EZ703U	370	387	705	7.000	7/1	3000	6000	22	3.0	1.0	77	18
429	143	203	10	1.3	PH531_0070 EZ705U	370	387	705	7.000	7/1	3000	6000	35	3.0	1.0	77	23
600	47	53	7.0	3.9	PH531_0050 EZ503U	206	206	562	5.000	5/1	2500	5500	8.6	3.0	1.0	97	13
600	58	69	8.6	3.2	PH531_0050 EZ702U	197	197	705	5.000	5/1	2500	5500	15	3.0	1.0	97	16
600	65	77	9.7	2.8	PH531_0050 EZ505U	322	322	562	5.000	5/1	2500	5500	13	3.0	1.0	97	16
600	79	100	12	2.3	PH531_0050 EZ703U	312	312	705	5.000	5/1	2500	5500	23	3.0	1.0	97	18
600	102	145	15	1.8	PH531_0050 EZ705U	385	400	705	5.000	5/1	2500	5500	35	3.0	1.0	97	23
750	37	43	9.1	4.9	PH531_0040 EZ503U	165	165	452	4.000	4/1	2200	5000	9.2	3.0	1.0	100	13
750	46	55	11	4.0	PH531_0040 EZ702U	157	157	696	4.000	4/1	2200	5000	15	3.0	1.0	100	16
750	52	61	13	3.5	PH531_0040 EZ505U	257	257	452	4.000	4/1	2200	5000	14	3.0	1.0	100	16
750	63	80	16	2.9	PH531_0040 EZ703U	250	250	696	4.000	4/1	2200	5000	23	3.0	1.0	100	18
750	82	116	20	2.2	PH531_0040 EZ705U	355	387	696	4.000	4/1	2200	5000	36	3.0	1.0	100	23
PH5 (n_{1N} = 4500 min^{-1}, $M_{2acc,max}$ = 390 Nm)																	
180	221	356	5.4	1.0	PH532_0250 EZ505U	385	400	705	25.00	25/1	3700	7500	12	3.0	1.0	85	18
225	177	285	6.0	1.3	PH532_0200 EZ505U	370	387	705	20.00	20/1	3500	7000	12	3.0	1.0	86	18
281	141	228	7.2	1.5	PH532_0160 EZ505U	355	355	696	16.00	16/1	3500	7000	12	3.0	1.0	83	18
450	91	147	4.4	1.4	PH531_0100 EZ505U	288	288	575	10.00	10/1	3300	6500	12	3.0	1.0	53	16
450	116	192	5.6	1.1	PH531_0100 EZ703U	288	288	575	10.00	10/1	3300	6500	22	3.0	1.0	53	18
643	64	103	5.2	2.5	PH531_0070 EZ505U	370	387	705	7.000	7/1	3000	6000	13	3.0	1.0	77	16
643	81	134	6.7	2.0	PH531_0070 EZ703U	370	387	705	7.000	7/1	3000	6000	22	3.0	1.0	77	18
643	110	202	9.0	1.5	PH531_0070 EZ705U	370	387	705	7.000	7/1	3000	6000	35	3.0	1.0	77	23
900	46	73	7.8	3.5	PH531_0050 EZ505U	322	322	562	5.000	5/1	2500	5500	13	3.0	1.0	97	16
900	58	96	10	2.8	PH531_0050 EZ703U	312	312	705	5.000	5/1	2500	5500	23	3.0	1.0	97	18
900	79	144	14	2.0	PH531_0050 EZ705U	385	400	705	5.000	5/1	2500	5500	35	3.0	1.0	97	23
1125	36	59	10	4.4	PH531_0040 EZ505U	257	257	452	4.000	4/1	2200	5000	14	3.0	1.0	100	16
1125	46	77	13	3.4	PH531_0040 EZ703U	250	250	696	4.000	4/1	2200	5000	23	3.0	1.0	100	18
1125	63	115	18	2.5	PH531_0040 EZ705U	355	387	696	4.000	4/1	2200	5000	36	3.0	1.0	100	23
PH5 (n_{1N} = 6000 min^{-1}, $M_{2acc,max}$ = 390 Nm)																	
86	150	182	0.9	1.4	PH532_0700 EZ401U	370	387	705	70.00	70/1	4000	8000	1.0	3.0	1.0	70	11
120	107	130	1.0	1.9	PH532_0500 EZ401U	385	395	705	50.00	50/1	4000	8000	1.1	3.0	1.0	79	11
120	158	205	1.6	1.3	PH532_0500 EZ501U	385	400	705	50.00	50/1	4000	8000	3.0	3.0	1.0	79	12
120	163	228	1.6	1.2	PH532_0500 EZ402U	385	400	705	50.00	50/1	4000	8000	1.8	3.0	1.0	79	12
150	86	104	1.4	1.9	PH532_0400 EZ401U	316	316	696	40.00	40/1	4000	8000	1.2	3.0	1.0	74	11
150	126	164	2.1	1.3	PH532_0400 EZ501U	355	356	696	40.00	40/1	4000	8000	3.1	3.0	1.0	74	12
150	130	182	2.2	1.3	PH532_0400 EZ402U	355	356	696	40.00	40/1	4000	8000	1.9	3.0	1.0	74	12
171	75	91	1.2	2.8	PH532_0350 EZ401U	277	277	705	35.00	35/1	4000	8000	1.1	3.0	1.0	84	11
171	111	143	1.8	1.9	PH532_0350 EZ501U	385	400	705	35.00	35/1	4000	8000	3.1	3.0	1.0	84	12
171	114	159	1.8	1.8	PH532_0350 EZ402U	385	400	705	35.00	35/1	4000	8000	1.8	3.0	1.0	84	12
171	169	254	2.7	1.2	PH532_0350 EZ502U	385	400	705	35.00	35/1	4000	8000	5.4	3.0	1.0	84	13
171	189	273	3.0	1.1	PH532_0350 EZ404U	385	400	705	35.00	35/1	4000	8000	3.1	3.0	1.0	84	14
171	202	345	3.3	1.0	PH532_0350 EZ503U	385	400	705	35.00	35/1	4000	8000	7.7	3.0	1.0	84	15
214	60	73	1.4	3.4	PH532_0280 EZ401U	221	221	696	28.00	28/1	4000	8000	1.2	3.0	1.0	80	11
214	89	115	2.1	2.3	PH532_0280 EZ501U	355	387	696	28.00	28/1	4000	8000	3.1	3.0	1.0	80	12
214	91	128	2.1	2.2	PH532_0280 EZ402U	355	387	696	28.00	28/1	4000	8000	1.9	3.0	1.0	80	12
214	135	203	3.2	1.5	PH532_0280 EZ502U	355	387	696	28.00	28/1	4000	8000	5.4	3.0	1.0	80	13
214	151	219	3.5	1.3	PH532_0280 EZ404U	355	387	696	28.00	28/1	4000	8000	3.2	3.0	1.0	80	14

n_{2N} [rpm]	M_{2N} [Nm]	$M_{2,0}$ [Nm]	a_{th}	S	Type	M_{2acc} [Nm]	M_{2accHT} [Nm]	M_{2NOT} [Nm]	i	i_{exakt}	n_{1maxDB} [rpm]	n_{1maxZB} [rpm]	J_1 [kgcm²]	$\Delta\varphi_2$ [arcmin]	$\Delta\varphi_{2red}$ [arcmin]	C_2 [Nm/ arcmin]	m [kg]
PH5 (n_{1N} = 6000 min^{-1}, $M_{2acc,max}$ = 390 Nm)																	
214	161	276	3.8	1.2	PH532_0280 EZ503U	355	387	696	28.00	28/1	4000	8000	7.8	3.0	1.0	80	15
240	53	65	1.4	3.9	PH532_0250 EZ401U	198	198	705	25.00	25/1	3700	7500	1.1	3.0	1.0	85	11
240	79	102	2.1	2.7	PH532_0250 EZ501U	372	372	705	25.00	25/1	3700	7500	3.1	3.0	1.0	85	12
240	81	114	2.2	2.6	PH532_0250 EZ402U	372	372	705	25.00	25/1	3700	7500	1.8	3.0	1.0	85	12
240	121	181	3.2	1.7	PH532_0250 EZ502U	385	400	705	25.00	25/1	3700	7500	5.4	3.0	1.0	85	13
240	135	195	3.6	1.6	PH532_0250 EZ404U	385	400	705	25.00	25/1	3700	7500	3.2	3.0	1.0	85	14
240	144	246	3.8	1.5	PH532_0250 EZ503U	385	400	705	25.00	25/1	3700	7500	7.8	3.0	1.0	85	15
300	43	52	1.6	4.9	PH532_0200 EZ401U	158	158	705	20.00	20/1	3500	7000	1.1	3.0	1.0	86	11
300	63	82	2.4	3.3	PH532_0200 EZ501U	298	298	705	20.00	20/1	3500	7000	3.1	3.0	1.0	86	12
300	65	91	2.4	3.2	PH532_0200 EZ402U	298	298	705	20.00	20/1	3500	7000	1.8	3.0	1.0	86	12
300	97	145	3.6	2.2	PH532_0200 EZ502U	370	387	705	20.00	20/1	3500	7000	5.4	3.0	1.0	86	13
300	108	156	4.0	1.9	PH532_0200 EZ404U	370	387	705	20.00	20/1	3500	7000	3.2	3.0	1.0	86	14
300	115	197	4.3	1.8	PH532_0200 EZ503U	370	387	705	20.00	20/1	3500	7000	7.8	3.0	1.0	86	15
375	51	65	2.8	3.9	PH532_0160 EZ501U	238	238	696	16.00	16/1	3500	7000	3.2	3.0	1.0	83	12
375	52	73	2.9	3.8	PH532_0160 EZ402U	238	238	696	16.00	16/1	3500	7000	1.9	3.0	1.0	83	12
375	77	116	4.3	2.5	PH532_0160 EZ502U	355	355	696	16.00	16/1	3500	7000	5.5	3.0	1.0	83	13
375	86	125	4.8	2.3	PH532_0160 EZ404U	355	355	696	16.00	16/1	3500	7000	3.3	3.0	1.0	83	14
375	92	158	5.2	2.1	PH532_0160 EZ503U	355	355	696	16.00	16/1	3500	7000	7.9	3.0	1.0	83	15
600	33	42	1.7	3.5	PH531_0100 EZ501U	154	154	575	10.00	10/1	3300	6500	3.2	3.0	1.0	53	9.9
600	50	75	2.6	2.3	PH531_0100 EZ502U	288	288	575	10.00	10/1	3300	6500	5.5	3.0	1.0	53	11
600	50	76	2.6	2.3	PH531_0100 EZ701U	192	192	575	10.00	10/1	3300	6500	8.8	3.0	1.0	53	13
600	60	102	3.1	1.9	PH531_0100 EZ503U	288	288	575	10.00	10/1	3300	6500	7.8	3.0	1.0	53	13
600	69	137	3.7	1.6	PH531_0100 EZ702U	288	288	575	10.00	10/1	3300	6500	14	3.0	1.0	53	16
857	35	52	3.2	4.2	PH531_0070 EZ502U	208	208	705	7.000	7/1	3000	6000	5.8	3.0	1.0	77	11
857	35	53	3.2	4.2	PH531_0070 EZ701U	134	134	705	7.000	7/1	3000	6000	9.1	3.0	1.0	77	13
857	42	71	3.8	3.5	PH531_0070 EZ503U	289	289	705	7.000	7/1	3000	6000	8.1	3.0	1.0	77	13
857	48	96	4.4	3.0	PH531_0070 EZ702U	276	276	705	7.000	7/1	3000	6000	14	3.0	1.0	77	16
PH7 (n_{1N} = 2000 min^{-1}, $M_{2acc,max}$ = 880 Nm)																	
286	262	294	9.4	1.7	PH731_0070 EZ813U	869	869	1720	7.000	7/1	2500	5000	106	3.0	1.0	166	45
286	388	462	14	1.1	PH731_0070 EZ815U	869	869	1720	7.000	7/1	2500	5000	169	3.0	1.0	166	58
400	187	210	14	2.4	PH731_0050 EZ813U	672	672	1720	5.000	5/1	2200	5000	108	3.0	1.0	208	45
400	277	330	21	1.6	PH731_0050 EZ815U	882	924	1720	5.000	5/1	2200	5000	171	3.0	1.0	208	58
500	150	168	18	2.9	PH731_0040 EZ813U	538	538	1680	4.000	4/1	1900	4000	110	3.0	1.0	243	45
500	222	264	27	2.0	PH731_0040 EZ815U	768	768	1680	4.000	4/1	1900	4000	173	3.0	1.0	243	58
PH7 (n_{1N} = 3000 min^{-1}, $M_{2acc,max}$ = 870 Nm)																	
43	280	306	0.7	2.0	PH732_0700 EZ501U	809	847	1617	70.00	70/1	3700	7000	3.2	3.0	1.0	154	18
43	482	521	1.2	1.2	PH732_0700 EZ502U	809	847	1617	70.00	70/1	3700	7000	5.5	3.0	1.0	154	20
43	482	540	1.2	1.2	PH732_0700 EZ701U	809	847	1617	70.00	70/1	3700	7000	8.8	3.0	1.0	154	21
60	200	219	0.9	2.8	PH732_0500 EZ501U	744	744	1660	50.00	50/1	3700	7000	3.4	3.0	1.0	176	18
60	344	372	1.5	1.6	PH732_0500 EZ502U	830	834	1660	50.00	50/1	3700	7000	5.7	3.0	1.0	176	20
60	344	386	1.5	1.6	PH732_0500 EZ701U	830	834	1660	50.00	50/1	3700	7000	9.0	3.0	1.0	176	21
60	451	516	1.9	1.2	PH732_0500 EZ503U	830	834	1660	50.00	50/1	3700	7000	8.1	3.0	1.0	176	21
75	160	175	1.1	3.0	PH732_0400 EZ501U	595	595	1540	40.00	40/1	3700	7000	3.7	3.0	1.0	182	18
75	275	298	1.9	1.7	PH732_0400 EZ502U	770	770	1540	40.00	40/1	3700	7000	6.0	3.0	1.0	182	20
75	275	309	1.9	1.7	PH732_0400 EZ701U	744	744	1540	40.00	40/1	3700	7000	9.3	3.0	1.0	182	21
75	361	413	2.5	1.3	PH732_0400 EZ503U	770	770	1540	40.00	40/1	3700	7000	8.4	3.0	1.0	182	21
75	446	536	3.1	1.1	PH732_0400 EZ702U	770	770	1540	40.00	40/1	3700	7000	15	3.0	1.0	182	24
86	140	153	1.1	3.9	PH732_0350 EZ501U	521	521	1720	35.00	35/1	3700	7000	3.5	3.0	1.0	183	18
86	241	260	1.8	2.2	PH732_0350 EZ502U	866	908	1720	35.00	35/1	3700	7000	5.8	3.0	1.0	183	20
86	241	270	1.8	2.2	PH732_0350 EZ701U	651	651	1720	35.00	35/1	3700	7000	9.1	3.0	1.0	183	21
86	316	361	2.4	1.7	PH732_0350 EZ503U	866	908	1720	35.00	35/1	3700	7000	8.1	3.0	1.0	183	21
86	391	469	2.9	1.4	PH732_0350 EZ702U	866	908	1720	35.00	35/1	3700	7000	14	3.0	1.0	183	24
86	439	521	3.3	1.2	PH732_0350 EZ505U	866	908	1720	35.00	35/1	3700	7000	13	3.0	1.0	183	24
86	537	677	4.0	1.0	PH732_0350 EZ703U	866	908	1720	35.00	35/1	3700	7000	22	3.0	1.0	183	26
107	112	122	1.2	4.8	PH732_0280 EZ501U	417	417	1540	28.00	28/1	3700	7000	3.8	3.0	1.0	194	18
107	193	208	2.0	2.8	PH732_0280 EZ502U	770	807	1540	28.00	28/1	3700	7000	6.1	3.0	1.0	194	20
107	193	216	2.0	2.8	PH732_0280 EZ701U	521	521	1540	28.00	28/1	3700	7000	9.4	3.0	1.0	194	21
107	253	289	2.7	2.1	PH732_0280 EZ503U	770	880	1540	28.00	28/1	3700	7000	8.5	3.0	1.0	194	21
107	312	375	3.3	1.7	PH732_0280 EZ702U	770	880	1540	28.00	28/1	3700	7000	15	3.0	1.0	194	24
107	352	417	3.7	1.5	PH732_0280 EZ505U	770	880	1540	28.00	28/1	3700	7000	13	3.0	1.0	194	24
107	430	542	4.5	1.3	PH732_0280 EZ703U	770	880	1540	28.00	28/1	3700	7000	23	3.0	1.0	194	26
120	172	186	2.3	2.9	PH732_0250 EZ502U	721	721	1720	25.00	25/1	3500	7000	5.8	3.0	1.0	186	20
120	172	193	2.3	2.9	PH732_0250 EZ701U	465	465	1720	25.00	25/1	3500	7000	9.1	3.0	1.0	186	21
120	226	258	3.0	2.2	PH732_0250 EZ503U	866	908	1720	25.00	25/1	3500	7000	8.2	3.0	1.0	186	21
120	279	335	3.8	1.8	PH732_0250 EZ702U	866	908	1720	25.00	25/1	3500	7000	14	3.0	1.0	186	24

n_{2N} [rpm]	M_{2N} [Nm]	$M_{2,0}$ [Nm]	a_{th}	S	Type	M_{2acc} [Nm]	M_{2accHT} [Nm]	M_{2NOT} [Nm]	i	i_{exakt}	n_{1maxDB} [rpm]	n_{1maxZB} [rpm]	J_1 [kgcm²]	$\Delta\varphi_2$ [arcmin]	$\Delta\varphi_{2red}$ [arcmin]	C_2 [Nm/ arcmin]	m [kg]
PH7 (n_{1N} = 3000 min^{-1}, $M_{2acc,max}$ = 870 Nm)																	
120	314	372	4.2	1.6	PH732_0250 EZ505U	866	908	1720	25.00	25/1	3500	7000	13	3.0	1.0	186	24
120	384	484	5.2	1.3	PH732_0250 EZ703U	866	908	1720	25.00	25/1	3500	7000	22	3.0	1.0	186	26
120	495	702	6.7	1.0	PH732_0250 EZ705U	866	908	1720	25.00	25/1	3500	7000	35	3.0	1.0	186	31
150	138	149	2.8	3.3	PH732_0200 EZ502U	577	577	1610	20.00	20/1	3000	6000	5.9	3.0	1.0	188	20
150	138	154	2.8	3.3	PH732_0200 EZ701U	372	372	1610	20.00	20/1	3000	6000	9.2	3.0	1.0	188	21
150	180	206	3.7	2.6	PH732_0200 EZ503U	800	800	1610	20.00	20/1	3000	6000	8.3	3.0	1.0	188	21
150	223	268	4.6	2.1	PH732_0200 EZ702U	763	763	1610	20.00	20/1	3000	6000	14	3.0	1.0	188	24
150	251	298	5.1	1.8	PH732_0200 EZ505U	805	845	1610	20.00	20/1	3000	6000	13	3.0	1.0	188	24
150	307	387	6.3	1.5	PH732_0200 EZ703U	805	845	1610	20.00	20/1	3000	6000	22	3.0	1.0	188	26
150	396	562	8.1	1.2	PH732_0200 EZ705U	805	845	1610	20.00	20/1	3000	6000	35	3.0	1.0	188	31
188	110	119	3.2	4.1	PH732_0160 EZ502U	461	461	1480	16.00	16/1	3000	6000	6.3	3.0	1.0	202	20
188	110	124	3.2	4.1	PH732_0160 EZ701U	298	298	1480	16.00	16/1	3000	6000	9.6	3.0	1.0	202	21
188	144	165	4.2	3.1	PH732_0160 EZ503U	640	640	1480	16.00	16/1	3000	6000	8.7	3.0	1.0	202	21
188	179	214	5.2	2.5	PH732_0160 EZ702U	610	610	1480	16.00	16/1	3000	6000	15	3.0	1.0	202	24
188	201	238	5.9	2.2	PH732_0160 EZ505U	740	740	1480	16.00	16/1	3000	6000	13	3.0	1.0	202	24
188	246	310	7.2	1.8	PH732_0160 EZ703U	740	740	1480	16.00	16/1	3000	6000	23	3.0	1.0	202	26
188	317	449	9.2	1.4	PH732_0160 EZ705U	740	740	1480	16.00	16/1	3000	6000	35	3.0	1.0	202	31
300	71	80	1.8	3.9	PH731_0100 EZ701U	192	192	1150	10.00	10/1	2500	5000	9.3	3.0	1.0	125	18
300	115	138	3.0	2.4	PH731_0100 EZ702U	394	394	1150	10.00	10/1	2500	5000	15	3.0	1.0	125	20
300	158	200	4.1	1.8	PH731_0100 EZ703U	575	575	1150	10.00	10/1	2500	5000	22	3.0	1.0	125	22
300	204	290	5.3	1.4	PH731_0100 EZ705U	575	575	1150	10.00	10/1	2500	5000	35	3.0	1.0	125	28
429	81	97	3.3	4.8	PH731_0070 EZ702U	276	276	1545	7.000	7/1	2500	5000	15	3.0	1.0	166	20
429	111	140	4.5	3.5	PH731_0070 EZ703U	437	437	1545	7.000	7/1	2500	5000	23	3.0	1.0	166	22
429	143	203	5.9	2.7	PH731_0070 EZ705U	699	699	1545	7.000	7/1	2500	5000	36	3.0	1.0	166	28
600	79	100	6.8	4.9	PH731_0050 EZ703U	312	312	1107	5.000	5/1	2200	5000	25	3.0	1.0	208	22
600	102	145	8.8	3.8	PH731_0050 EZ705U	499	499	1107	5.000	5/1	2200	5000	37	3.0	1.0	208	28
750	82	116	11	4.7	PH731_0040 EZ705U	399	399	889	4.000	4/1	1900	4000	39	3.0	1.0	243	28
PH7 (n_{1N} = 4000 min^{-1}, $M_{2acc,max}$ = 880 Nm)																	
400	242	420	6.9	1.0	PH731_0100 EZ813U	575	575	1150	10.00	10/1	2500	5000	105	3.0	1.0	125	45
400	251	645	7.1	1.0	PH731_0100 EZ815U	575	575	1150	10.00	10/1	2500	5000	168	3.0	1.0	125	58
571	169	294	7.6	2.1	PH731_0070 EZ813U	869	869	1720	7.000	7/1	2500	5000	106	3.0	1.0	166	45
571	175	451	7.9	2.0	PH731_0070 EZ815U	869	869	1720	7.000	7/1	2500	5000	169	3.0	1.0	166	58
800	121	210	11	2.9	PH731_0050 EZ813U	672	672	1720	5.000	5/1	2200	5000	108	3.0	1.0	208	45
800	125	322	12	2.8	PH731_0050 EZ815U	882	924	1720	5.000	5/1	2200	5000	171	3.0	1.0	208	58
1000	97	168	15	3.6	PH731_0040 EZ813U	538	538	1680	4.000	4/1	1900	4000	110	3.0	1.0	243	45
1000	100	258	16	3.5	PH731_0040 EZ815U	768	768	1680	4.000	4/1	1900	4000	173	3.0	1.0	243	58
PH7 (n_{1N} = 4500 min^{-1}, $M_{2acc,max}$ = 870 Nm)																	
90	442	711	2.2	1.1	PH732_0500 EZ505U	830	834	1660	50.00	50/1	3700	7000	13	3.0	1.0	176	24
113	353	569	2.8	1.2	PH732_0400 EZ505U	770	770	1540	40.00	40/1	3700	7000	13	3.0	1.0	182	24
129	309	498	2.6	1.6	PH732_0350 EZ505U	866	908	1720	35.00	35/1	3700	7000	13	3.0	1.0	183	24
129	394	651	3.3	1.2	PH732_0350 EZ703U	866	908	1720	35.00	35/1	3700	7000	22	3.0	1.0	183	26
161	247	398	2.9	2.0	PH732_0280 EZ505U	770	880	1540	28.00	28/1	3700	7000	13	3.0	1.0	194	24
161	315	521	3.7	1.5	PH732_0280 EZ703U	770	880	1540	28.00	28/1	3700	7000	23	3.0	1.0	194	26
161	427	781	5.0	1.1	PH732_0280 EZ705U	770	880	1540	28.00	28/1	3700	7000	35	3.0	1.0	194	31
180	221	356	3.2	2.1	PH732_0250 EZ505U	866	908	1720	25.00	25/1	3500	7000	13	3.0	1.0	186	24
180	281	465	4.1	1.6	PH732_0250 EZ703U	866	908	1720	25.00	25/1	3500	7000	22	3.0	1.0	186	26
180	381	698	5.6	1.2	PH732_0250 EZ705U	866	908	1720	25.00	25/1	3500	7000	35	3.0	1.0	186	31
225	177	285	3.7	2.6	PH732_0200 EZ505U	805	845	1610	20.00	20/1	3000	6000	13	3.0	1.0	188	24
225	225	372	4.7	2.0	PH732_0200 EZ703U	805	845	1610	20.00	20/1	3000	6000	22	3.0	1.0	188	26
225	305	558	6.4	1.5	PH732_0200 EZ705U	805	845	1610	20.00	20/1	3000	6000	35	3.0	1.0	188	31
281	141	228	4.1	3.2	PH732_0160 EZ505U	740	740	1480	16.00	16/1	3000	6000	13	3.0	1.0	202	24
281	180	298	5.3	2.5	PH732_0160 EZ703U	740	740	1480	16.00	16/1	3000	6000	23	3.0	1.0	202	26
281	244	446	7.1	1.8	PH732_0160 EZ705U	740	740	1480	16.00	16/1	3000	6000	35	3.0	1.0	202	31
450	116	192	3.4	2.1	PH731_0100 EZ703U	575	575	1150	10.00	10/1	2500	5000	22	3.0	1.0	125	22
450	157	288	4.7	1.5	PH731_0100 EZ705U	575	575	1150	10.00	10/1	2500	5000	35	3.0	1.0	125	28
643	81	134	3.8	4.1	PH731_0070 EZ703U	437	437	1545	7.000	7/1	2500	5000	23	3.0	1.0	166	22
643	110	202	5.2	3.0	PH731_0070 EZ705U	699	699	1545	7.000	7/1	2500	5000	36	3.0	1.0	166	28
900	79	144	7.7	4.3	PH731_0050 EZ705U	499	499	1107	5.000	5/1	2200	5000	37	3.0	1.0	208	28
PH7 (n_{1N} = 6000 min^{-1}, $M_{2acc,max}$ = 870 Nm)																	
86	221	286	0.7	2.0	PH732_0700 EZ501U	809	847	1617	70.00	70/1	3700	7000	3.2	3.0	1.0	154	18
86	339	508	1.1	1.3	PH732_0700 EZ502U	809	847	1617	70.00	70/1	3700	7000	5.5	3.0	1.0	154	20
86	339	514	1.1	1.3	PH732_0700 EZ701U	809	847	1617	70.00	70/1	3700	7000	8.8	3.0	1.0	154	21
86	404	690	1.3	1.1	PH732_0700 EZ503U	809	847	1617	70.00	70/1	3700	7000	7.9	3.0	1.0	154	21
120	158	205	0.9	2.8	PH732_0500 EZ501U	744	744	1660	50.00	50/1	3700	7000	3.4	3.0	1.0	176	18
120	242	363	1.3	1.8	PH732_0500 EZ502U	830	834	1660	50.00	50/1	3700	7000	5.7	3.0	1.0	176	20

n_{2N} [rpm]	M_{2N} [Nm]	$M_{2,0}$ [Nm]	a_{th}	S	Type	M_{2acc} [Nm]	M_{2accHT} [Nm]	M_{2NOT} [Nm]	i	i_{exakt}	n_{1maxDB} [rpm]	n_{1maxZB} [rpm]	J_1 [kgcm²]	$\Delta\varphi_2$ [arcmin]	$\Delta\varphi_{2red}$ [arcmin]	C_2 [Nm/ arcmin]	m [kg]
PH7 (n_{1N} = 6000 min^{-1}, $M_{2acc,max}$ = 870 Nm)																	
120	242	367	1.3	1.8	PH732_0500 EZ701U	830	834	1660	50.00	50/1	3700	7000	9.0	3.0	1.0	176	21
120	288	493	1.6	1.5	PH732_0500 EZ503U	830	834	1660	50.00	50/1	3700	7000	8.1	3.0	1.0	176	21
120	335	665	1.8	1.3	PH732_0500 EZ702U	830	834	1660	50.00	50/1	3700	7000	14	3.0	1.0	176	24
150	126	164	1.1	3.0	PH732_0400 EZ501U	595	595	1540	40.00	40/1	3700	7000	3.7	3.0	1.0	182	18
150	193	290	1.7	1.9	PH732_0400 EZ502U	770	770	1540	40.00	40/1	3700	7000	6.0	3.0	1.0	182	20
150	193	294	1.7	1.9	PH732_0400 EZ701U	744	744	1540	40.00	40/1	3700	7000	9.3	3.0	1.0	182	21
150	231	394	2.0	1.6	PH732_0400 EZ503U	770	770	1540	40.00	40/1	3700	7000	8.4	3.0	1.0	182	21
150	268	532	2.4	1.4	PH732_0400 EZ702U	770	770	1540	40.00	40/1	3700	7000	15	3.0	1.0	182	24
171	111	143	1.0	4.0	PH732_0350 EZ501U	521	521	1720	35.00	35/1	3700	7000	3.5	3.0	1.0	183	18
171	169	254	1.6	2.6	PH732_0350 EZ502U	866	908	1720	35.00	35/1	3700	7000	5.8	3.0	1.0	183	20
171	169	257	1.6	2.6	PH732_0350 EZ701U	651	651	1720	35.00	35/1	3700	7000	9.1	3.0	1.0	183	21
171	202	345	1.9	2.2	PH732_0350 EZ503U	866	908	1720	35.00	35/1	3700	7000	8.1	3.0	1.0	183	21
171	234	465	2.2	1.9	PH732_0350 EZ702U	866	908	1720	35.00	35/1	3700	7000	14	3.0	1.0	183	24
214	89	115	1.1	5.0	PH732_0280 EZ501U	417	417	1540	28.00	28/1	3700	7000	3.8	3.0	1.0	194	18
214	135	203	1.7	3.2	PH732_0280 EZ502U	770	807	1540	28.00	28/1	3700	7000	6.1	3.0	1.0	194	20
214	135	206	1.7	3.2	PH732_0280 EZ701U	521	521	1540	28.00	28/1	3700	7000	9.4	3.0	1.0	194	21
214	161	276	2.1	2.7	PH732_0280 EZ503U	770	880	1540	28.00	28/1	3700	7000	8.5	3.0	1.0	194	21
214	187	372	2.4	2.3	PH732_0280 EZ702U	770	880	1540	28.00	28/1	3700	7000	15	3.0	1.0	194	24
240	121	181	2.0	3.4	PH732_0250 EZ502U	721	721	1720	25.00	25/1	3500	7000	5.8	3.0	1.0	186	20
240	121	184	2.0	3.4	PH732_0250 EZ701U	465	465	1720	25.00	25/1	3500	7000	9.1	3.0	1.0	186	21
240	144	246	2.3	2.9	PH732_0250 EZ503U	866	908	1720	25.00	25/1	3500	7000	8.2	3.0	1.0	186	21
240	167	332	2.7	2.5	PH732_0250 EZ702U	866	908	1720	25.00	25/1	3500	7000	14	3.0	1.0	186	24
300	97	145	2.2	4.2	PH732_0200 EZ502U	577	577	1610	20.00	20/1	3000	6000	5.9	3.0	1.0	188	20
300	97	147	2.2	4.2	PH732_0200 EZ701U	372	372	1610	20.00	20/1	3000	6000	9.2	3.0	1.0	188	21
300	115	197	2.6	3.6	PH732_0200 EZ503U	800	800	1610	20.00	20/1	3000	6000	8.3	3.0	1.0	188	21
300	134	266	3.1	3.1	PH732_0200 EZ702U	763	763	1610	20.00	20/1	3000	6000	14	3.0	1.0	188	24
375	92	158	3.0	4.4	PH732_0160 EZ503U	640	640	1480	16.00	16/1	3000	6000	8.7	3.0	1.0	202	21
375	107	213	3.4	3.8	PH732_0160 EZ702U	610	610	1480	16.00	16/1	3000	6000	15	3.0	1.0	202	24
PH8 (n_{1N} = 2000 min^{-1}, $M_{2acc,max}$ = 2100 Nm)																	
57	1269	1423	3.9	1.1	PH832_0350 EZ813U	2100	2300	4200	35.00	35/1	3000	6000	107	3.0	1.0	511	69
71	1015	1139	5.7	1.1	PH832_0280 EZ813U	2000	2000	3929	28.00	28/1	3000	6000	108	3.0	1.0	480	69
80	907	1017	5.1	1.4	PH832_0250 EZ813U	2100	2300	4200	25.00	25/1	2700	5500	107	3.0	1.0	521	69
100	725	813	5.9	1.7	PH832_0200 EZ813U	2100	2300	4200	20.00	20/1	2500	4500	107	3.0	1.0	526	69
100	1074	1279	8.7	1.2	PH832_0200 EZ815U	2100	2300	4200	20.00	20/1	2500	4500	171	3.0	1.0	526	82
125	580	651	7.5	1.9	PH832_0160 EZ813U	2000	2083	3929	16.00	16/1	2500	4500	109	3.0	1.0	501	69
125	859	1023	11	1.3	PH832_0160 EZ815U	2000	2200	3929	16.00	16/1	2500	4500	172	3.0	1.0	501	82
200	374	420	3.8	2.1	PH831_0100 EZ813U	1344	1344	2784	10.00	10/1	2200	4000	109	3.0	1.0	344	62
200	554	660	5.6	1.4	PH831_0100 EZ815U	1392	1392	2784	10.00	10/1	2200	4000	172	3.0	1.0	344	74
286	262	294	4.5	3.8	PH831_0070 EZ813U	941	941	3442	7.000	7/1	2000	4000	114	3.0	1.0	463	62
286	388	462	6.6	2.6	PH831_0070 EZ815U	1344	1344	3442	7.000	7/1	2000	4000	177	3.0	1.0	463	74
400	277	330	9.9	3.6	PH831_0050 EZ815U	960	960	2487	5.000	5/1	1600	4000	184	3.0	1.0	604	74
500	222	264	16	3.6	PH831_0040 EZ815U	768	768	1998	4.000	4/1	1400	3500	194	3.0	1.0	620	74
PH8 (n_{1N} = 3000 min^{-1}, $M_{2acc,max}$ = 2100 Nm)																	
30	688	772	0.7	1.3	PH832_1000 EZ701U	1380	1380	2760	100.0	100/1	3000	6000	9.1	3.0	1.0	333	41
43	482	540	0.6	2.6	PH832_0700 EZ701U	1302	1302	3696	70.00	70/1	3000	6000	9.6	3.0	1.0	425	41
43	781	937	1.0	1.6	PH832_0700 EZ702U	1848	1936	3696	70.00	70/1	3000	6000	15	3.0	1.0	425	44
43	1074	1354	1.3	1.2	PH832_0700 EZ703U	1848	1936	3696	70.00	70/1	3000	6000	23	3.0	1.0	425	46
60	344	386	0.7	3.7	PH832_0500 EZ701U	930	930	4200	50.00	50/1	3000	6000	11	3.0	1.0	491	41
60	558	670	1.1	2.3	PH832_0500 EZ702U	1907	1907	4200	50.00	50/1	3000	6000	16	3.0	1.0	491	44
60	767	967	1.6	1.7	PH832_0500 EZ703U	2100	2300	4200	50.00	50/1	3000	6000	24	3.0	1.0	491	46
60	990	1404	2.0	1.3	PH832_0500 EZ705U	2100	2300	4200	50.00	50/1	3000	6000	36	3.0	1.0	491	51
75	275	309	1.0	3.7	PH832_0400 EZ701U	744	744	3840	40.00	40/1	3000	6000	12	3.0	1.0	453	41
75	446	536	1.6	2.3	PH832_0400 EZ702U	1525	1525	3840	40.00	40/1	3000	6000	17	3.0	1.0	453	44
75	614	774	2.2	1.7	PH832_0400 EZ703U	1920	1936	3840	40.00	40/1	3000	6000	25	3.0	1.0	453	46
75	792	1123	2.8	1.3	PH832_0400 EZ705U	1920	1936	3840	40.00	40/1	3000	6000	38	3.0	1.0	453	51
86	391	469	1.4	3.2	PH832_0350 EZ702U	1335	1335	4200	35.00	35/1	3000	6000	16	3.0	1.0	511	44
86	537	677	1.9	2.3	PH832_0350 EZ703U	2100	2116	4200	35.00	35/1	3000	6000	24	3.0	1.0	511	46
86	693	983	2.4	1.8	PH832_0350 EZ705U	2100	2300	4200	35.00	35/1	3000	6000	36	3.0	1.0	511	51
107	312	375	1.9	3.2	PH832_0280 EZ702U	1068	1068	3929	28.00	28/1	3000	6000	18	3.0	1.0	480	44
107	430	542	2.6	2.3	PH832_0280 EZ703U	1693	1693	3929	28.00	28/1	3000	6000	25	3.0	1.0	480	46
107	555	786	3.4	1.8	PH832_0280 EZ705U	2000	2000	3929	28.00	28/1	3000	6000	38	3.0	1.0	480	51
120	279	335	1.6	4.5	PH832_0250 EZ702U	953	953	4200	25.00	25/1	2700	5500	16	3.0	1.0	521	44
120	384	484	2.2	3.3	PH832_0250 EZ703U	1511	1511	4200	25.00	25/1	2700	5500	24	3.0	1.0	521	46
120	495	702	2.9	2.5	PH832_0250 EZ705U	2100	2300	4200	25.00	25/1	2700	5500	37	3.0	1.0	521	51
150	307	387	2.5	4.1	PH832_0200 EZ703U	1209	1209	4200	20.00	20/1	2500	4500	25	3.0	1.0	526	46

n_{2N} [rpm]	M_{2N} [Nm]	$M_{2,0}$ [Nm]	a_{th}	S	Type	M_{2acc} [Nm]	M_{2accHT} [Nm]	M_{2NOT} [Nm]	i	i_{exakt}	n_{1maxDB} [rpm]	n_{1maxZB} [rpm]	J_1 [kgcm²]	$\Delta\varphi_2$ [arcmin]	$\Delta\varphi_{2red}$ [arcmin]	C_2 [Nm/ arcmin]	m [kg]
PH8 (n_{1N} = 3000 min^{-1}, $M_{2acc,max}$ = 2100 Nm)																	
150	396	562	3.2	3.2	PH832_0200 EZ705U	1934	1934	4200	20.00	20/1	2500	4500	37	3.0	1.0	526	51
188	246	310	3.5	4.1	PH832_0160 EZ703U	967	967	3451	16.00	16/1	2500	4500	27	3.0	1.0	501	46
188	317	449	4.5	3.2	PH832_0160 EZ705U	1548	1548	3451	16.00	16/1	2500	4500	39	3.0	1.0	501	51
PH8 (n_{1N} = 4000 min^{-1}, $M_{2acc,max}$ = 2100 Nm)																	
114	820	1422	3.2	1.4	PH832_0350 EZ813U	2100	2300	4200	35.00	35/1	3000	6000	107	3.0	1.0	511	69
114	850	2185	3.3	1.3	PH832_0350 EZ815U	2100	2300	4200	35.00	35/1	3000	6000	170	3.0	1.0	511	82
143	656	1138	4.4	1.4	PH832_0280 EZ813U	2000	2000	3929	28.00	28/1	3000	6000	108	3.0	1.0	480	69
143	680	1748	4.6	1.3	PH832_0280 EZ815U	2000	2000	3929	28.00	28/1	3000	6000	171	3.0	1.0	480	82
160	586	1016	3.7	2.0	PH832_0250 EZ813U	2100	2300	4200	25.00	25/1	2700	5500	107	3.0	1.0	521	69
160	607	1561	3.9	1.9	PH832_0250 EZ815U	2100	2300	4200	25.00	25/1	2700	5500	170	3.0	1.0	521	82
200	469	813	4.2	2.4	PH832_0200 EZ813U	2100	2300	4200	20.00	20/1	2500	4500	107	3.0	1.0	526	69
200	486	1249	4.3	2.4	PH832_0200 EZ815U	2100	2300	4200	20.00	20/1	2500	4500	171	3.0	1.0	526	82
250	375	650	5.8	2.4	PH832_0160 EZ813U	2000	2083	3929	16.00	16/1	2500	4500	109	3.0	1.0	501	69
250	389	999	6.0	2.4	PH832_0160 EZ815U	2000	2200	3929	16.00	16/1	2500	4500	172	3.0	1.0	501	82
400	242	420	3.1	2.5	PH831_0100 EZ813U	1344	1344	2784	10.00	10/1	2200	4000	109	3.0	1.0	344	62
400	251	645	3.2	2.4	PH831_0100 EZ815U	1392	1392	2784	10.00	10/1	2200	4000	172	3.0	1.0	344	74
571	169	294	3.6	4.7	PH831_0070 EZ813U	941	941	3442	7.000	7/1	2000	4000	114	3.0	1.0	463	62
571	175	451	3.8	4.5	PH831_0070 EZ815U	1344	1344	3442	7.000	7/1	2000	4000	177	3.0	1.0	463	74
PH8 (n_{1N} = 4500 min^{-1}, $M_{2acc,max}$ = 2100 Nm)																	
64	788	1302	1.1	1.4	PH832_0700 EZ703U	1848	1936	3696	70.00	70/1	3000	6000	23	3.0	1.0	425	46
64	1068	1953	1.5	1.0	PH832_0700 EZ705U	1848	1936	3696	70.00	70/1	3000	6000	35	3.0	1.0	425	51
90	563	930	1.3	2.0	PH832_0500 EZ703U	2100	2300	4200	50.00	50/1	3000	6000	24	3.0	1.0	491	46
90	763	1395	1.8	1.5	PH832_0500 EZ705U	2100	2300	4200	50.00	50/1	3000	6000	36	3.0	1.0	491	51
113	450	744	1.8	2.0	PH832_0400 EZ703U	1920	1936	3840	40.00	40/1	3000	6000	25	3.0	1.0	453	46
113	610	1116	2.5	1.5	PH832_0400 EZ705U	1920	1936	3840	40.00	40/1	3000	6000	38	3.0	1.0	453	51
129	394	651	1.6	2.8	PH832_0350 EZ703U	2100	2116	4200	35.00	35/1	3000	6000	24	3.0	1.0	511	46
129	534	977	2.1	2.1	PH832_0350 EZ705U	2100	2300	4200	35.00	35/1	3000	6000	36	3.0	1.0	511	51
161	315	521	2.2	2.8	PH832_0280 EZ703U	1693	1693	3929	28.00	28/1	3000	6000	25	3.0	1.0	480	46
161	427	781	3.0	2.1	PH832_0280 EZ705U	2000	2000	3929	28.00	28/1	3000	6000	38	3.0	1.0	480	51
180	281	465	1.9	3.9	PH832_0250 EZ703U	1511	1511	4200	25.00	25/1	2700	5500	24	3.0	1.0	521	46
180	381	698	2.5	2.9	PH832_0250 EZ705U	2100	2300	4200	25.00	25/1	2700	5500	37	3.0	1.0	521	51
225	225	372	2.1	4.9	PH832_0200 EZ703U	1209	1209	4200	20.00	20/1	2500	4500	25	3.0	1.0	526	46
225	305	558	2.8	3.6	PH832_0200 EZ705U	1934	1934	4200	20.00	20/1	2500	4500	37	3.0	1.0	526	51
281	180	298	2.9	4.9	PH832_0160 EZ703U	967	967	3451	16.00	16/1	2500	4500	27	3.0	1.0	501	46
281	244	446	3.9	3.6	PH832_0160 EZ705U	1548	1548	3451	16.00	16/1	2500	4500	39	3.0	1.0	501	51
PH8 (n_{1N} = 6000 min^{-1}, $M_{2acc,max}$ = 1910 Nm)																	
60	484	735	0.6	1.4	PH832_1000 EZ701U	1380	1380	2760	100.0	100/1	3000	6000	9.1	3.0	1.0	333	41
60	670	1330	0.9	1.0	PH832_1000 EZ702U	1380	1380	2760	100.0	100/1	3000	6000	14	3.0	1.0	333	44
86	339	514	0.5	3.0	PH832_0700 EZ701U	1302	1302	3696	70.00	70/1	3000	6000	9.6	3.0	1.0	425	41
86	469	931	0.7	2.1	PH832_0700 EZ702U	1848	1936	3696	70.00	70/1	3000	6000	15	3.0	1.0	425	44
120	242	367	0.6	4.2	PH832_0500 EZ701U	930	930	4200	50.00	50/1	3000	6000	11	3.0	1.0	491	41
120	335	665	0.9	3.0	PH832_0500 EZ702U	1907	1907	4200	50.00	50/1	3000	6000	16	3.0	1.0	491	44
150	193	294	0.9	4.2	PH832_0400 EZ701U	744	744	3840	40.00	40/1	3000	6000	12	3.0	1.0	453	41
150	268	532	1.2	3.0	PH832_0400 EZ702U	1525	1525	3840	40.00	40/1	3000	6000	17	3.0	1.0	453	44
171	234	465	1.0	4.3	PH832_0350 EZ702U	1335	1335	4200	35.00	35/1	3000	6000	16	3.0	1.0	511	44
214	187	372	1.4	4.3	PH832_0280 EZ702U	1068	1068	3929	28.00	28/1	3000	6000	18	3.0	1.0	480	44
PH9 (n_{1N} = 2000 min^{-1}, $M_{2acc,max}$ = 5000 Nm)																	
33	2176	2440	1.3	1.6	PH942_0600 EZ813U	5000	5000	10000	60.00	60/1	2800	4500	108	3.0	1.0	1065	99
33	3222	3837	1.9	1.1	PH942_0600 EZ815U	5000	5000	10000	60.00	60/1	2800	4500	171	3.0	1.0	1065	111
42	1741	1952	1.5	2.0	PH942_0480 EZ813U	5000	5000	10000	48.00	48/1	2800	4500	110	3.0	1.0	1084	99
42	2578	3069	2.2	1.4	PH942_0480 EZ815U	5000	5000	10000	48.00	48/1	2800	4500	173	3.0	1.0	1084	111
48	1523	1708	1.6	2.3	PH942_0420 EZ813U	5000	5000	10000	42.00	42/1	2800	4500	111	3.0	1.0	1103	99
48	2256	2686	2.3	1.6	PH942_0420 EZ815U	5000	5000	10000	42.00	42/1	2800	4500	174	3.0	1.0	1103	111
50	1450	1627	1.9	2.0	PH942_0400 EZ813U	4600	4600	9200	40.00	40/1	2800	4500	108	3.0	1.0	1068	99
50	2148	2558	2.9	1.4	PH942_0400 EZ815U	4600	4600	9200	40.00	40/1	2800	4500	171	3.0	1.0	1068	111
63	1160	1301	2.0	2.6	PH942_0320 EZ813U	4166	4166	9200	32.00	32/1	2800	4500	110	3.0	1.0	1112	99
63	1719	2046	3.0	1.8	PH942_0320 EZ815U	4600	4600	9200	32.00	32/1	2800	4500	173	3.0	1.0	1112	111
67	1088	1220	2.0	3.0	PH942_0300 EZ813U	3906	3906	10000	30.00	30/1	2500	4000	116	3.0	1.0	1117	99
67	1611	1918	2.9	2.0	PH942_0300 EZ815U	5000	5000	10000	30.00	30/1	2500	4000	179	3.0	1.0	1117	111
71	1015	1139	1.9	3.4	PH942_0280 EZ813U	3646	3646	10000	28.00	28/1	2800	4500	112	3.0	1.0	1156	99
71	1504	1791	2.8	2.3	PH942_0280 EZ815U	5000	5000	10000	28.00	28/1	2800	4500	175	3.0	1.0	1156	111
83	870	976	2.4	3.4	PH942_0240 EZ813U	3125	3125	10000	24.00	24/1	2000	3500	124	3.0	1.0	1124	99
83	1289	1535	3.6	2.3	PH942_0240 EZ815U	4464	4464	10000	24.00	24/1	2000	3500	187	3.0	1.0	1124	111
100	725	813	2.6	4.1	PH942_0200 EZ813U	2604	2604	9548	20.00	20/1	2500	4000	119	3.0	1.0	1193	99

n_{2N} [rpm]	M_{2N} [Nm]	$M_{2,0}$ [Nm]	a_{th}	S	Type	M_{2acc} [Nm]	M_{2accHT} [Nm]	M_{2NOT} [Nm]	i	i_{exakt}	n_{1maxDB} [rpm]	n_{1maxZB} [rpm]	J_1 [kgcm²]	$\Delta\varphi_2$ [arcmin]	$\Delta\varphi_{2red}$ [arcmin]	C_2 [Nm/ arcmin]	m [kg]
PH9 (n_{1N} = 2000 min^{-1}, $M_{2acc,max}$ = 5000 Nm)																	
100	1074	1279	3.9	2.8	PH942_0200 EZ815U	3720	3720	9548	20.00	20/1	2500	4000	182	3.0	1.0	1193	111
111	653	732	2.8	4.6	PH942_0180 EZ813U	2344	2344	8655	18.00	18/1	1800	3000	149	3.0	1.0	1141	99
111	967	1151	4.1	3.1	PH942_0180 EZ815U	3348	3348	8655	18.00	18/1	1800	3000	213	3.0	1.0	1141	111
125	859	1023	4.4	3.5	PH942_0160 EZ815U	2976	2976	7670	16.00	16/1	2000	3500	190	3.0	1.0	1211	111
167	644	767	5.1	4.7	PH942_0120 EZ815U	2232	2232	5770	12.00	12/1	1800	3000	218	3.0	1.0	1256	111
PH9 (n_{1N} = 4000 min^{-1}, $M_{2acc,max}$ = 5000 Nm)																	
67	1406	2438	0.9	2.3	PH942_0600 EZ813U	5000	5000	10000	60.00	60/1	2800	4500	108	3.0	1.0	1065	99
67	1457	3746	1.0	2.2	PH942_0600 EZ815U	5000	5000	10000	60.00	60/1	2800	4500	171	3.0	1.0	1065	111
83	1125	1951	0.9	3.1	PH942_0480 EZ813U	5000	5000	10000	48.00	48/1	2800	4500	110	3.0	1.0	1084	99
83	1166	2997	1.0	3.0	PH942_0480 EZ815U	5000	5000	10000	48.00	48/1	2800	4500	173	3.0	1.0	1084	111
95	984	1707	1.0	3.6	PH942_0420 EZ813U	5000	5000	10000	42.00	42/1	2800	4500	111	3.0	1.0	1103	99
95	1020	2622	1.0	3.4	PH942_0420 EZ815U	5000	5000	10000	42.00	42/1	2800	4500	174	3.0	1.0	1103	111
100	937	1626	1.6	2.5	PH942_0400 EZ813U	4600	4600	9200	40.00	40/1	2800	4500	108	3.0	1.0	1068	99
100	971	2498	1.6	2.4	PH942_0400 EZ815U	4600	4600	9200	40.00	40/1	2800	4500	171	3.0	1.0	1068	111
125	750	1301	1.7	3.3	PH942_0320 EZ813U	4166	4166	9200	32.00	32/1	2800	4500	110	3.0	1.0	1112	99
125	777	1998	1.7	3.1	PH942_0320 EZ815U	4600	4600	9200	32.00	32/1	2800	4500	173	3.0	1.0	1112	111
133	703	1219	1.3	4.7	PH942_0300 EZ813U	3906	3906	10000	30.00	30/1	2500	4000	116	3.0	1.0	1117	99
133	728	1873	1.3	4.5	PH942_0300 EZ815U	5000	5000	10000	30.00	30/1	2500	4000	179	3.0	1.0	1117	111
143	656	1138	1.4	4.6	PH942_0280 EZ813U	3646	3646	10000	28.00	28/1	2800	4500	112	3.0	1.0	1156	99
143	680	1748	1.5	4.5	PH942_0280 EZ815U	5000	5000	10000	28.00	28/1	2800	4500	175	3.0	1.0	1156	111
PH10 (n_{1N} = 2000 min^{-1}, $M_{2acc,max}$ = 7500 Nm)																	
33	2176	2440	1.1	2.0	PH1042_0600 EZ813U	7000	–	14000	60.00	60/1	2800	4500	108	3.0	–	1615	114
33	3222	3837	1.6	1.4	PH1042_0600 EZ815U	7000	–	14000	60.00	60/1	2800	4500	171	3.0	–	1615	127
48	1523	1708	1.2	3.3	PH1042_0420 EZ813U	5468	–	15000	42.00	42/1	2800	4500	111	3.0	–	1702	114
48	2256	2686	1.7	2.2	PH1042_0420 EZ815U	7500	–	15000	42.00	42/1	2800	4500	174	3.0	–	1702	127
67	1088	1220	1.4	4.6	PH1042_0300 EZ813U	3906	–	14323	30.00	30/1	2500	4000	117	3.0	–	1737	114
67	1611	1918	2.1	3.1	PH1042_0300 EZ815U	5580	–	14323	30.00	30/1	2500	4000	180	3.0	–	1737	127
83	1289	1535	2.5	3.6	PH1042_0240 EZ815U	4464	–	11506	24.00	24/1	2000	3500	188	3.0	–	1754	127
111	967	1151	2.9	4.8	PH1042_0180 EZ815U	3348	–	8655	18.00	18/1	1800	3000	214	3.0	–	1778	127
PH10 (n_{1N} = 4000 min^{-1}, $M_{2acc,max}$ = 7500 Nm)																	
67	1406	2438	0.9	2.5	PH1042_0600 EZ813U	7000	–	14000	60.00	60/1	2800	4500	108	3.0	–	1615	114
67	1457	3746	0.9	2.4	PH1042_0600 EZ815U	7000	–	14000	60.00	60/1	2800	4500	171	3.0	–	1615	127
95	984	1707	0.8	4.6	PH1042_0420 EZ813U	5468	–	15000	42.00	42/1	2800	4500	111	3.0	–	1702	114
95	1020	2622	0.9	4.5	PH1042_0420 EZ815U	7500	–	15000	42.00	42/1	2800	4500	174	3.0	–	1702	127

3.3 Dimensional drawings

In this chapter you can find the dimensions of the geared motors.

There is a dimensional drawing for every possible shaft/housing design, each with the tables for gearbox dimensions, motor dimensions and geared motor dimensions.

Dimensions can exceed the specifications of ISO 2768-mK due to casting tolerances or accumulation of individual tolerances.

We reserve the right to make dimensional changes due to ongoing technical development.

You can download 3D models of our standard drives at https://configurator.stoeber.de/en-US/.

Combination options and the dimensions of forced ventilated geared motors can also be found at https://configurator.stoeber.de/en-US/.

3.3.1 F shaft design (flange shaft)

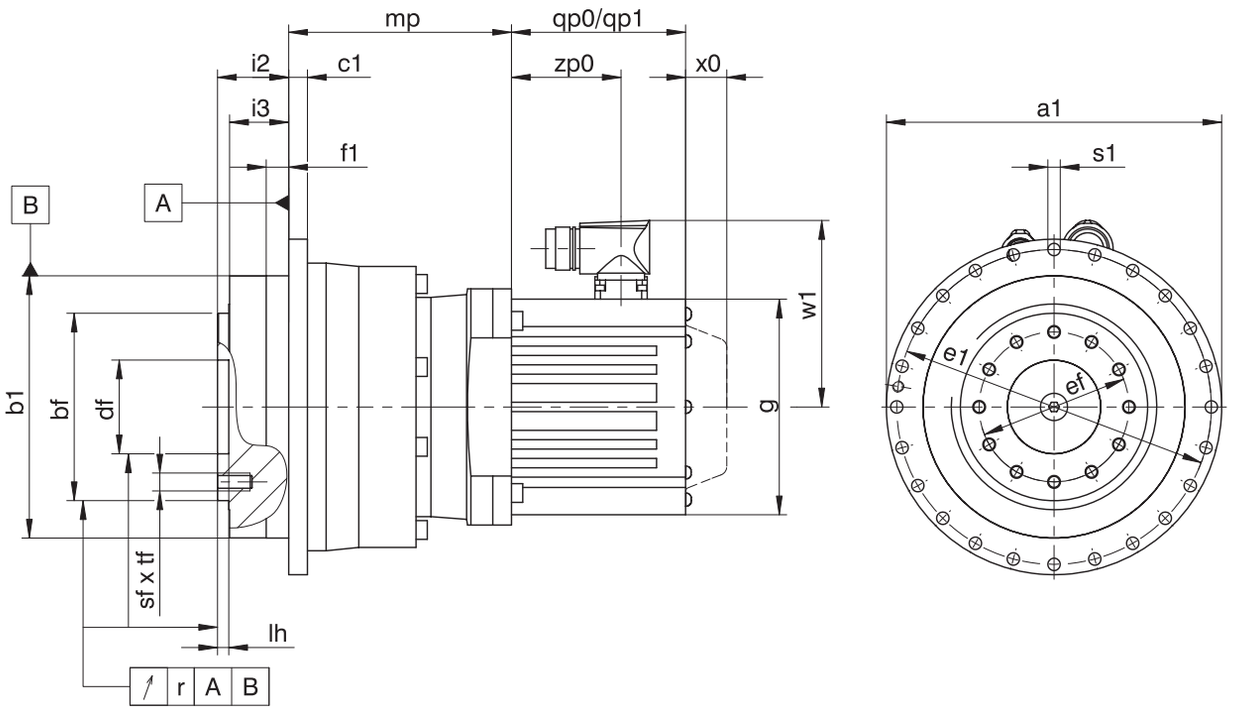

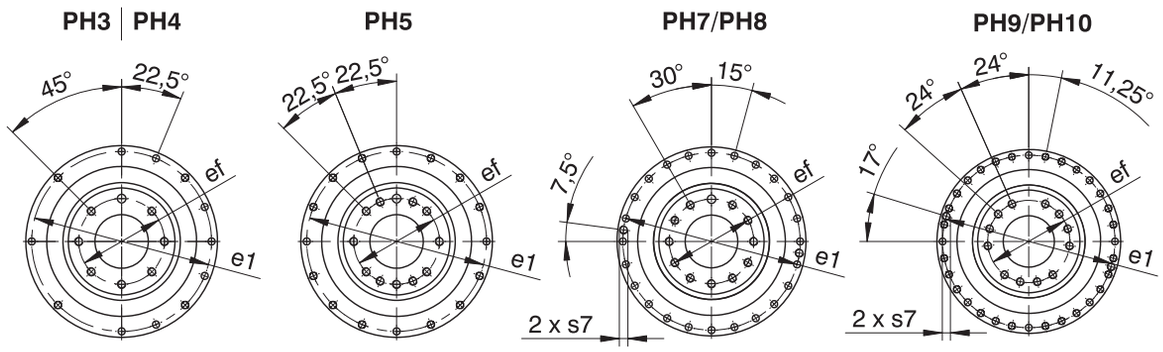

qp0	Applies to motors without brake.	qp1	Applies to motors with brake.
x0	EZ2: Applies only to motors with brake and encoders using an optical or inductive measuring method EZ3 – EZ8: Applies to encoders using an optical measuring method	w1	Different for the One Cable Solution (OCS), see the chapter [▶ 17.4]

Dimensions of gearboxes

Type	Øa1	Øb1	Øbf	c1	Ødf	Øe1	Øef	f1	i2	i3	lh	r	Øs1	s7	sf	tf
PH331	86	64_{h7}	40_{h7}	4	20.0^{H6}	79	31.5	7	19.5	16.5	4	0.020	4.5	–	M5	7
PH332	86	64_{h7}	40_{h7}	4	20.0^{H6}	79	31.5	7	19.5	16.5	4	0.020	4.5	–	M5	7
PH431	118	90_{h7}	63_{h7}	7	31.5^{H6}	109	50.0	10	30.0	24.0	6	0.020	5.5	–	M6	11
PH432	118	90_{h7}	63_{h7}	7	31.5^{H6}	109	50.0	10	30.0	24.0	6	0.020	5.5	–	M6	11
PH531	145	110_{h7}	80_{h7}	8	40.0^{H6}	135	63.0	12	29.0	23.0	6	0.020	5.5	–	M6	11
PH532	145	110_{h7}	80_{h7}	8	40.0^{H6}	135	63.0	12	29.0	23.0	6	0.020	5.5	–	M6	11
PH731	179	140_{h7}	100_{h7}	10	50.0^{H6}	168	80.0	12	38.0	32.0	6	0.025	6.6	–	M8	14
PH732	179	140_{h7}	100_{h7}	10	50.0^{H6}	168	80.0	12	38.0	32.0	6	0.025	6.6	–	M8	14
PH831	247	200_{h7}	160_{h7}	12	80.0^{H6}	233	125.0	15	50.0	42.0	8	0.030	9.0	M10	M10	18
PH832	247	200_{h7}	160_{h7}	12	80.0^{H6}	233	125.0	15	50.0	42.0	8	0.030	9.0	M10	M10	18
PH942	300	255_{h7}	180_{h7}	18	90.0^{H6}	280	140.0	20	66.0	55.0	12	0.030	13.5	M8	M16	24
PH1042	330	285_{h7}	200_{h7}	20	95.0^{H6}	310	160.0	20	75.0	60.0	10	0.040	13.5	M10	M20	28

Dimensions of motors

Type	□g	qp0	qp1	w1	x0	zp0
EZ202U	55	141	150.0	47.0	25	86.0
EZ203U	55	159	168.0	47.0	25	104.0
EZ301U	72	90	130.0	55.5	21	54.5
EZ302U	72	112	152.0	55.5	21	76.5
EZ303U	72	134	174.0	55.5	21	98.5
EZ401U	98	98	146.5	91.0	22	56.0
EZ402U	98	123	171.5	91.0	22	81.0
EZ404U	98	173	221.5	91.0	22	131.0
EZ501U	115	93	147.5	100.0	22	58.5
EZ502U	115	118	172.5	100.0	22	83.5
EZ503U	115	143	197.5	100.0	22	108.5
EZ505U	115	193	247.5	100.0	22	158.5
EZ701U	145	102	161.0	115.0	22	64.0
EZ702U	145	127	186.0	115.0	22	89.0
EZ703U	145	152	211.0	115.0	22	114.0
EZ705U	145	207	266.0	134.0	22	165.0
EZ813U	190	238	315.0	156.5	22	184.0
EZ815U	190	320	397.0	156.5	22	266.0

Dimensions of geared motors

Type	EZ2	EZ3	EZ4	EZ5	EZ7	EZ8
	mp	mp	mp	mp	mp	mp
PH331	–	51.0	47.5	–	–	–
PH332	71.0	84.5	–	–	–	–
PH431	–	–	54.5	54.0	–	–
PH432	–	99.0	95.5	–	–	–
PH531	–	–	–	61.0	64.0	–
PH532	–	–	103.0	102.5	–	–
PH731	–	–	–	–	71.0	81.0
PH732	–	–	–	119.0	122.0	–
PH831	–	–	–	–	–	110.0
PH832	–	–	–	–	161.0	171.0
PH942	–	–	–	–	–	210.5
PH1042	–	–	–	–	–	217.5

3.4 Type designation

This chapter shows you an explanation of the type designation with the associated options.

Additional ordering information not included in the type designation can be found at the end of the chapter.

Example code

PH	5	3	2	S	F	S	S	0250	EZ401U

Explanation

Code	Designation	Design
PH	Type	Planetary gearbox
5	Size	5 (example)
3	Generation	Generation 3
4		Generation 4
1	Stages	Single-stage
2		Two-stage
S	Housing	Standard
F	Shaft	Flange shaft
S	Bearing	Standard bearing
V		Reinforced bearing (PH3 – PH5)
S	Backlash	Standard
R		Reduced (PH3 – PH9)
0250	Transmission ratio (i x 10)	i = 25 (example)
EZ401U	Motor	EZ synchronous servo motor

To complete the type designation, also specify the following in your order:

- A detailed type designation of the motor, see the chapter [▶ 17.5]
- Radial shaft seal rings at the output made of NBR or FKM (option), see the chapter [▶ 3.6.3]
- Reverse operation of the output shaft from ±20° to ±90° and horizontal installation, see the chapter [▶ 3.6.4]

To make selecting your geared motor easy, use our STOBER Configurator at https://configurator.stoeber.de/en-US/.

You can find a detailed description of the nameplate in the chapter [▶ 17.5.1].

3.5 Product description

3.5.1 Input options

EZ synchronous servo motor



Catalog ID 442437_en

MB motor adapter + EZ synchronous servo motor



Catalog ID 443311_en

The corresponding catalogs can be found at http://www.stoeber.de/en/downloads/

Enter the ID of the catalog in the Search term field.

3.5.2 Installation conditions

The torque and force values listed in this catalog are valid under the following conditions:

- When the flange shaft and gear housing are fastened on the machine side using screws of strength class 12.9
- When the gear housings are adjusted at pilot øb1. The machine-side fit must be H7.
- When the flange shaft is adjusted using the connecting element at pilot øbf or ødf

3.5.3 Lubricants

STOBER fills the gearboxes with the amount and type of lubricant specified on the nameplate.

You will receive lubricants for use in the food industry upon request.

3.5.4 Other product features

Feature	Value
Max. permitted gearbox temperature (on the surface of the gearbox)	≤ 90 °C
Paint	Black RAL 9005
Explosion-proof design in accordance with (ATEX) Directive 2014/34/EU (optional)	Not available
Efficiency:	
η_{get} single-stage	96%
η_{get} two-stage	93%
Protection class:[1]	
Gearbox	IP65
Motor	IP56, optionally IP66

3.5.5 Direction of rotation

The input and output rotate in the same direction.

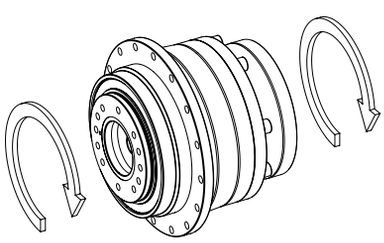

3.6 Project configuration

Project your drives using our SERVOsoft designing software. Download SERVOsoft free of charge after registration at https://www.stoeber.de/en/services/info-servosoft/.

It is the most convenient and reliable method of drive selection, as the entire torque/speed curve of the application is displayed and evaluated here in the curve of the geared motor.

In this chapter, only limit values for specific operating points can be taken into consideration for manual drive selection.

An explanation of the formula symbols can be found in Chapter [▷ 20.1].

The formula symbols for values actually present in the application are marked with *.

[1] Observe the protection class of all the components.

3.6.1 Drive selection

Drive selection for gearboxes

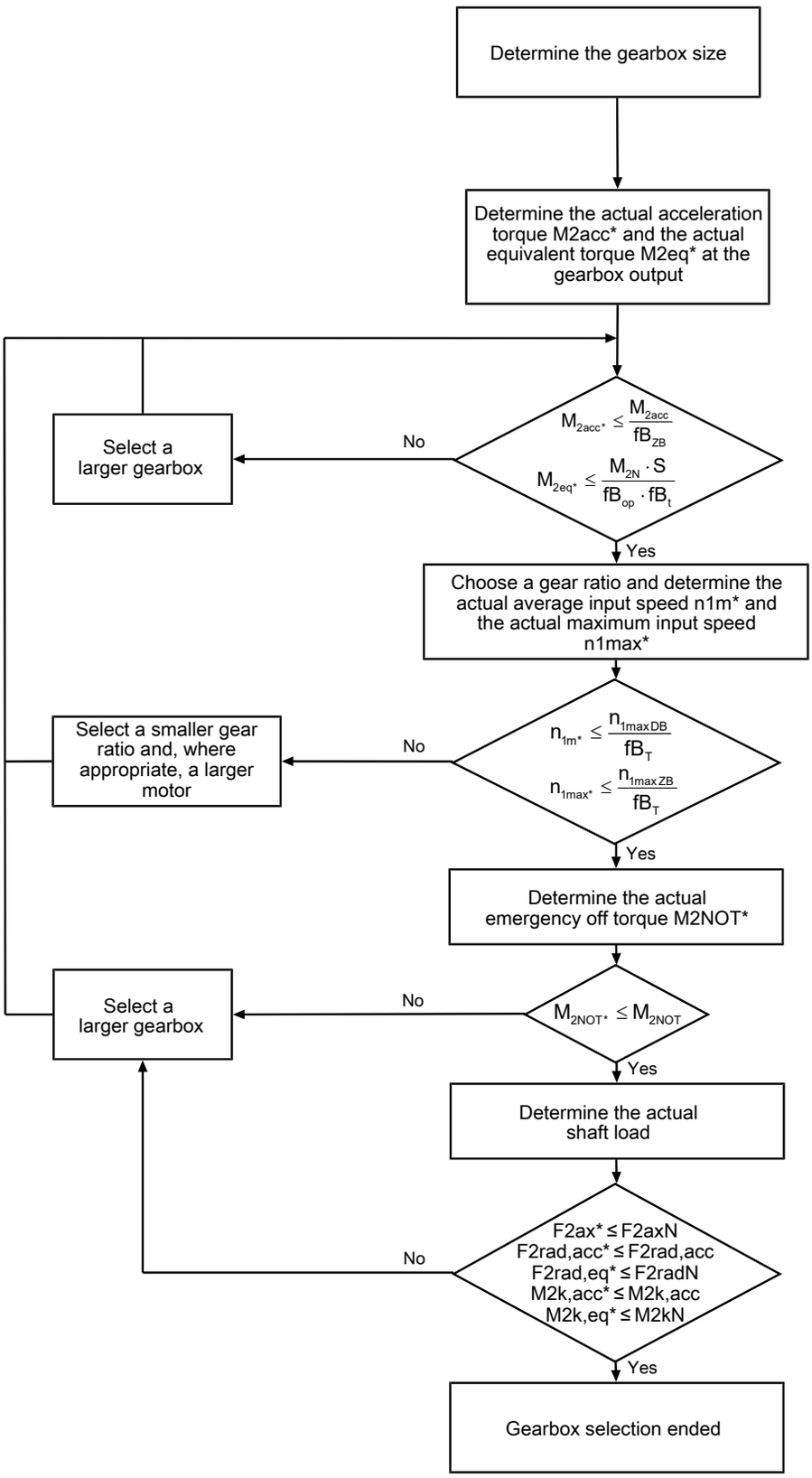

Calculate the forces and tilting torques in the chapter Permitted shaft loads.

Refer to the selection tables for the values for i, n_{1maxDB}, n_{1maxZB}, M_{2acc} (M_{2accHT} for reduced backlash), M_{2NOT}, M_{2N} and S.

The values for fB_T, fB_{op}, fB_t and fB_{ZB} can be found in the corresponding tables in this chapter.

Drive selection for motors

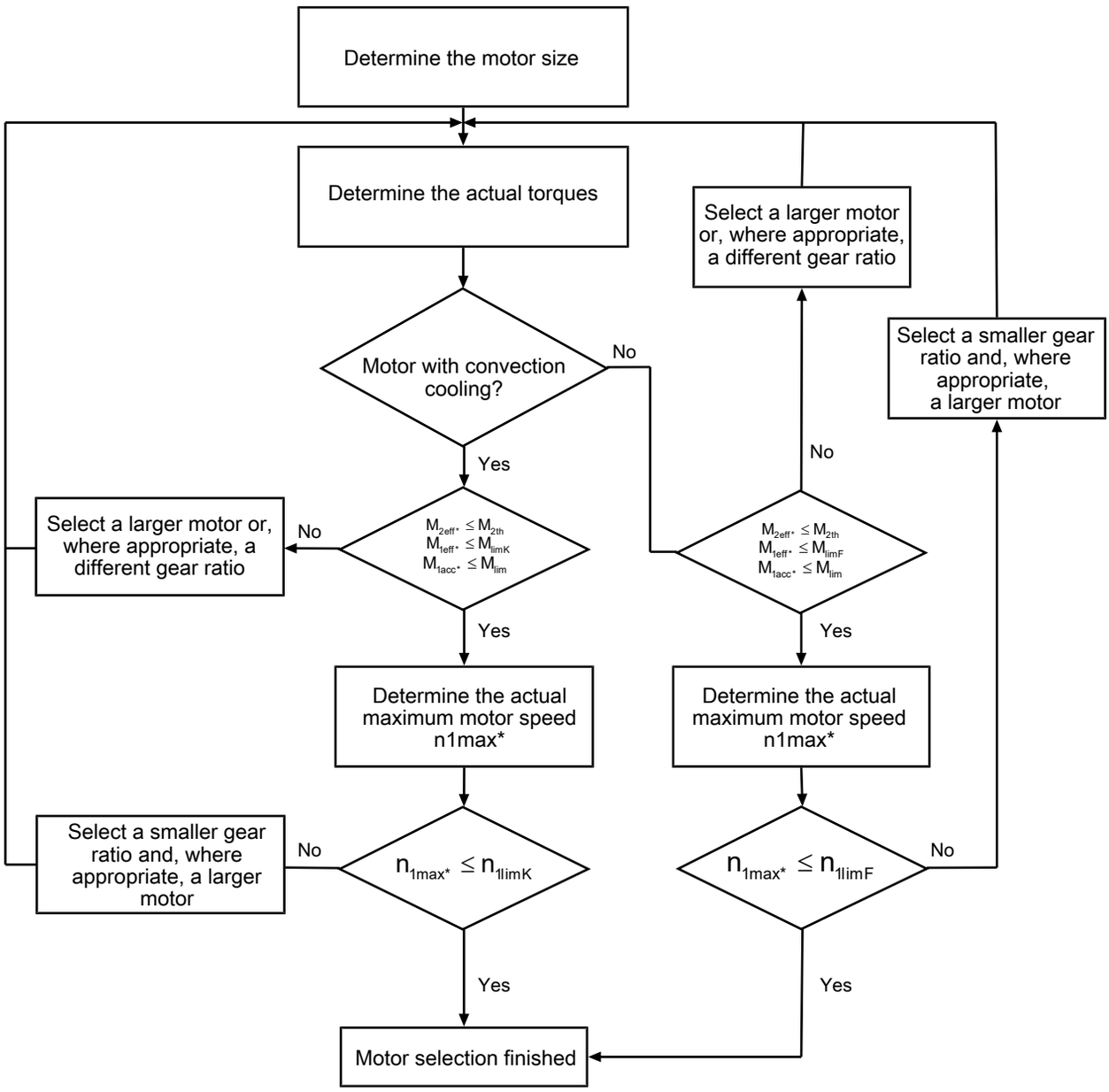

The value for M_{lim}, M_{limK}, M_{limF}, n_{1limK} and n_{1limF} can be found in the motor characteristic curve in the chapter [▷ 17.3]. Note the size, nominal speed n_N and cooling type of the motor.

Example of cyclic operation

The following calculations are based on a representation of the power taken from the output based in accordance with the following example:

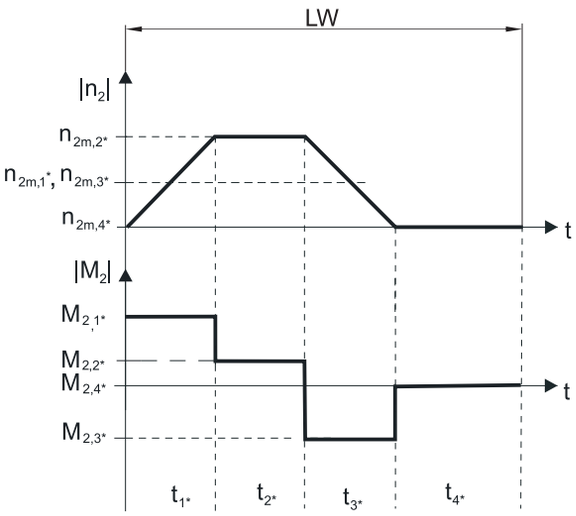

Calculation of the actual maximum acceleration torques

$$M_{2acc*} = J_{tot} \cdot \frac{\Delta n_2}{9{,}55 \cdot \Delta t} + M_{L*}$$

$$M_{1acc*} = \frac{M_{2acc*}}{i \cdot \eta_{get}} + J_1 \cdot \frac{\Delta n_1}{9{,}55 \cdot \Delta t}$$

Calculation of the actual average input speed

$$n_{1m*} = n_{2m*} \cdot i$$

$$n_{2m*} = \frac{\left|n_{2m,1*}\right| \cdot t_{1*} + \ldots + \left|n_{2m,n*}\right| \cdot t_{n*}}{t_{1*} + \ldots + t_{n*}}$$

If $t_{1*} + \ldots + t_{3*} \geq 6$ min, calculate n_{2m*} without the rest phase t_{4*}.

The values for the ratio i can be found in the selection tables.

Calculation of the actual effective torque

$$M_{2eff*} = \sqrt{\frac{t_{1*} \cdot M_{2,1*}{}^2 + \ldots + t_{n*} \cdot M_{2,n*}{}^2}{t_{1*} + \ldots + t_{n*}}}$$

Calculation of the actual emergency off torque

$$M_{2NOT*} = J_{tot} \cdot \frac{\Delta n_2}{9.55 \cdot \Delta t} + M_{L*}$$

Calculation of the actual equivalent torque

$$M_{2eq*} = \sqrt[3]{\frac{\left|n_{2m,1*}\right| \cdot t_{1*} \cdot \left|M_{2,1*}{}^3\right| + \ldots + \left|n_{2m,n*}\right| \cdot t_{n*} \cdot \left|M_{2,n*}{}^3\right|}{\left|n_{2m,1*}\right| \cdot t_{1*} + \ldots + \left|n_{2m,n*}\right| \cdot t_{n*}}}$$

Calculation of the thermal limit torque

Calculate the thermal limit torque M_{2th} for a duty cycle $ED_{10} > 50\%$ and the actual average input speed n_{1m*}. (At $K_{mot,th} \leq 0$ you must reduce the average input speed n_{1m*} accordingly or select another geared motor size.)

$$M_{2th} = M_{op} \cdot i \cdot K_{mot,th}$$

$$K_{mot,th} = 0{,}93 - \frac{a_{th}}{1000} \cdot fB_T \cdot \left(\frac{n_{1m*}}{1000}\right)^3$$

Refer to the selection tables for the values of i and a_{th}.

The values for fB_T can be found in the corresponding table in this chapter.

The value for the torque of the motor at operating point M_{op} with the determined average input speed n_{1m*} can be found in the motor characteristic curve in the chapter [▶ 17.3]. Note the size, nominal speed n_N and cooling type of the motor. The figure below shows an example of reading the torque M_{op} of a motor with convection cooling at the operating point.

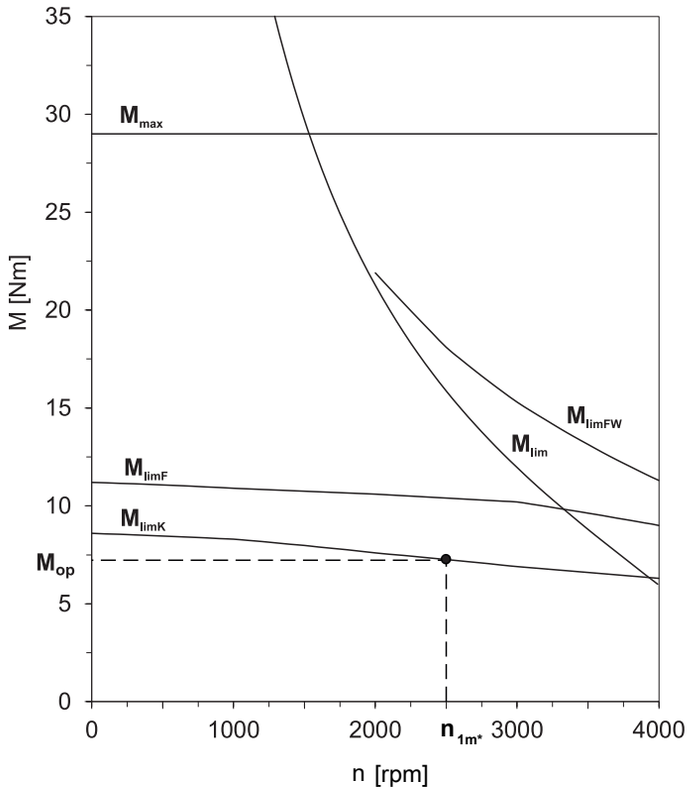

Operating factors

Operating mode	fB_{op}
Uniform continuous operation	1.00
Cyclic operation	1.00
Reversing load cyclic operation	1.00

Run time	fB_t
Daily runtime ≤ 8 h	1.00
Daily runtime ≤ 16 h	1.15
Daily runtime ≤ 24 h	1.20

Cyclic operation	fB_{ZB}
≤ 1000 load changes/hour (LW/h)	1.00
> 1000 load changes/hour (LW/h)	1.15

Temperature		fB_T
Motor cooling	**Surrounding temperature**	
Motor with forced ventilation	≤ 20 °C	0.9
	≤ 30 °C	1.0
	≤ 40 °C	1.15
Motor with convection cooling	≤ 20 °C	1.0
	≤ 30 °C	1.1
	≤ 40 °C	1.25

Notes

- The maximum permitted gearbox temperature (see the "Other product features" chapter) must not be exceeded. Doing so may result in damage to the geared motor.
- For braking from full speed (for example when the power fails or when setting up the machine), note the permitted gearbox torques (M_{2acc}, M_{2NOT}) in the selection tables.

3.6.2 Permitted shaft loads for the output shaft

The values specified in the tables apply to the permitted shaft loads:

- For shaft dimensions in accordance with the catalog
- For output speeds $n_{2m*} \leq 100$ rpm ($F^{2axN} = F_{2ax100}$; $F_{2radN} = F_{2rad100}$; $M_{2kN} = M_{2k100}$)
- Only if radial forces on the gearbox are stabilized by its pilots (housing, flange shaft)

Permitted shaft loads for standard bearing S

Type	z_2 [mm]	F_{2ax100} [N]	$F_{2rad100}$ [N]	$F_{2rad,acc}$ [N]	M_{2k100} [Nm]	$M_{2k,acc}$ [Nm]	C_{2k} [Nm/ arcmin]
PH3	62.5	1650	1613	1613	101	101	75
PH4	83.0	2150	3095	3571	257	296	192
PH5	97.0	4150	4536	4897	440	475	429
PH7	86.0	6150	17045	17045	1466	1466	500
PH8	125.5	10050	27778	27778	3486	3486	1550
PH9	155.0	33000	48387	70968	7500	11000	7500
PH10	171.0	50000	51462	73099	8800	12500	9500

Permitted shaft loads for reinforced bearing V

Type	z_2 [mm]	F_{2ax100} [N]	$F_{2rad100}$ [N]	$F_{2rad,acc}$ [N]	M_{2k100} [Nm]	$M_{2k,acc}$ [Nm]	C_{2k} [Nm/ arcmin]
PH3	66.5	2200	2250	2250	150	150	80
PH4	88.5	2900	4000	4000	354	354	217
PH5	104.0	5000	5500	5500	572	572	478

For other output speeds, download diagrams at https://configurator.stoeber.de/en-US/.

The following applies to output speeds $n_{2m*} > 100$ rpm:

$$F_{2axN} = \frac{F_{2ax100}}{\sqrt[3]{\frac{n_{2m*}}{100\ \text{rpm}}}} \qquad F_{2radN} = \frac{F_{2rad100}}{\sqrt[3]{\frac{n_{2m*}}{100\ \text{rpm}}}} \qquad M_{2kN} = \frac{M_{2k100}}{\sqrt[3]{\frac{n_{2m*}}{100\ \text{rpm}}}}$$

The values for F_{2ax100}, $F_{2rad100}$ and M_{2k100} can be found in the table "Permitted shaft loads" in this chapter.

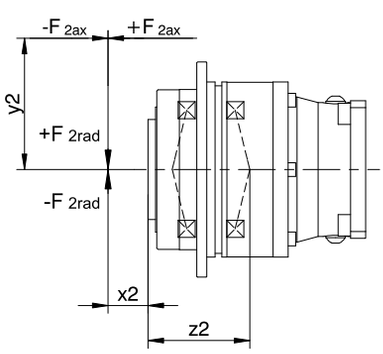

Fig. 1: Force application points

You can determine the permitted radial forces from the permitted tilting torque M_{2kN} and $M_{2k,acc}$. The actual radial forces may not exceed the permitted radial forces. The permitted radial forces pertain to the shaft end (x2 = 0).

$$M_{2k,acc*} = \frac{2 \cdot F_{2ax*} \cdot y_2 + F_{2rad,acc*} \cdot (x_2 + z_2)}{1000}$$

For applications with multiple axial and/or radial forces, you must add the forces as vectors.

In the event of EMERGENCY OFF operation (max. 1000 load changes), you can multiply the permitted forces and torques for F_{2ax100}, $F_{2rad100}$ and M_{2k100} by a factor of two.

Also note the calculation for equivalent values:

$$M_{2k,eq^*} = \sqrt[3]{\frac{\left|n_{2m,1^*}\right| \cdot t_{1^*} \cdot \left|M_{2k,acc,1^*}{}^3\right| + \ldots + \left|n_{2m,n^*}\right| \cdot t_{n^*} \cdot \left|M_{2k,acc,n^*}{}^3\right|}{\left|n_{2m,1^*}\right| \cdot t_{1^*} + \ldots + \left|n_{2m,n^*}\right| \cdot t_{n^*}}}$$

$$F_{2rad,eq^*} = \sqrt[3]{\frac{\left|n_{2m,1^*}\right| \cdot t_{1^*} \cdot \left|F_{2rad,acc,1^*}{}^3\right| + \ldots + \left|n_{2m,n^*}\right| \cdot t_{n^*} \cdot \left|F_{2rad,acc,n^*}{}^3\right|}{\left|n_{2m,1^*}\right| \cdot t_{1^*} + \ldots + \left|n_{2m,n^*}\right| \cdot t_{n^*}}}$$

The following apply to the bearing service life L_{10h} ($ED_{10} \leq 40\%$):

$L_{10h} > 10000$ h with $1 < M_{2kN}/M_{2k^*} < 1.25$

$L_{10h} > 20000$ h with $1.25 < M_{2kN}/M_{2k^*} < 1.5$

$L_{10h} > 30000$ h with $1.5 < M_{2kN}/M_{2k^*}$

For different duty cycles:

$$L_{10h} > L_{10h(ED_{10}=40\%)} \cdot \frac{40\%}{ED_{10}}$$

3.6.3 Recommendation for radial shaft seal rings

For a duty cycle > 60% and higher surrounding temperatures, we recommend radial shaft seal rings made of FKM at the output.

Properties:

- Excellent temperature resistance
- High chemical stability
- Very good resistance to aging
- Excellent resistance in oils and greases
- For use in the food, beverage and pharmaceutical industries

Leak-proofness

Our gearboxes are equipped with high-quality radial shaft seal rings and checked for leaks. However, a leak cannot be fully ruled out over the length of use of a gearbox. If you use a gearbox with goods incompatible with the lubricant, you must take measures to prevent direct contact with the gearbox lubricant in case of a leak.

3.6.4 Reverse operation

To ensure lubrication for circulating gearing parts during cyclic reverse operation from ± 20° to ± 90° at the output, pay careful attention to the position of the output shaft for the horizontal mounting of the gearbox, as shown in the diagrams below.

The images show the center position of reverse operation.

Cyclic reverse operation ≤ ± 20° on request.

Size 3 – 10
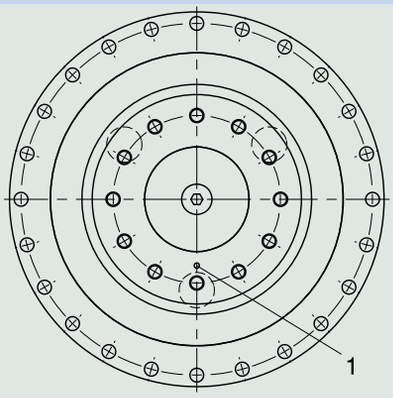
1 Position of the mark: bottom

Please note that the hole pattern may be different, depending on the size of the planetary gearbox.

3.7 Additional documentation

Additional documentation related to the product can be found at
http://www.stoeber.de/en/downloads/

Enter the ID of the documentation in the Search term field.

Documentation	ID
Operating manual gearboxes, geared motors PH33 – PH83, PH94 – PH104	443354_en
Operating manual for EZ synchronous servo motors	443032_en

4 PHQ planetary geared motors

Table of contents

4.1 Overview 72

4.2 Selection tables 73

4.3 Dimensional drawings 81

4.3.1 PHQ4 – PHQ10 F shaft design (flange shaft) 82

4.3.2 PHQ11 F shaft design (flange shaft) 84

4.4 Type designation 85

4.5 Product description 85

4.5.1 Input options 85

4.5.2 Installation conditions 86

4.5.3 Mounting positions 86

4.5.4 Lubricants 86

4.5.5 Other product features 86

4.5.6 Direction of rotation 87

4.6 Project configuration 87

4.6.1 Drive selection 88

4.6.2 Permitted shaft loads for the output shaft 92

4.6.3 Recommendation for radial shaft seal rings 93

4.6.4 Reverse operation 94

4.7 Additional documentation 94



4 Planetary geared motors PHQ

4.1 Overview

Quattro-Power for maximum power density

Features

Power density	★★★★★
Backlash	★★★★★
Price category	€€€€
Shaft load	★★★★★
Smooth operation	★★★★☆
Torsional stiffness	★★★★★
Mass moment of inertia	★★★★★
Helical gearing	✓
Maintenance-free	✓
Any mounting position (single/two stage)	✓
High power density	✓
Continuous operation without cooling	✓
Stiff output bearings due to pretension	✓
Reinforced output bearing (PHQ4 – PHQ5)	✓ (optional)
Compact and highly dynamic due to direct motor attachment	✓

Key ★☆☆☆☆ good | ★★★★★ excellent
€ Economy | €€€€€ Premium

Technical data

i	5.5 – 600
M_{2acc}	72 – 22000 Nm
$\Delta\phi_2$	1 – 3 arcmin
η_{get}	90 – 96 %

4.2 Selection tables

The technical data specified in the selection tables applies to:

- Installation altitudes up to 1000 m above sea level
- Surrounding temperatures from 0 °C to 40 °C
- Drives with convection-cooled motors (e.g. EZ401**U**)

For the technical data on drives with forced ventilated motors (e.g. EZ401**B**), refer to https://configurator.stoeber.de/en-US/.

In the case of the version with a reinforced bearing and gear ratios ≤ 5, the maximum permitted input speed n_{1maxZB} is reduced. You can find values at https://configurator.stoeber.de/en-US/

An explanation of the formula symbols can be found in Chapter [▷ 20.1].

n_{2N} [rpm]	M_{2N} [Nm]	$M_{2,0}$ [Nm]	a_{th}	S	Type	M_{2acc} [Nm]	M_{2accHT} [Nm]	M_{2NOT} [Nm]	i	i_{exakt}	n_{1maxDB} [rpm]	n_{1maxZB} [rpm]	J_1 [kgcm²]	$\Delta\varphi_2$ [arcmin]	$\Delta\varphi_{2red}$ [arcmin]	C_2 [Nm/ arcmin]	m [kg]
PHQ4 (n_{1N} = 3000 min^{-1}, $M_{2acc,max}$ = 200 Nm)																	
55	48	49	0.6	2.7	PHQ432_0550 EZ301U	143	143	400	55.00	55/1	4500	8000	0.21	3.0	1.0	38	5.8
55	81	86	1.0	1.6	PHQ432_0550 EZ302U	200	247	400	55.00	55/1	4500	8000	0.31	3.0	1.0	38	6.4
55	106	112	1.3	1.2	PHQ432_0550 EZ303U	200	247	400	55.00	55/1	4500	8000	0.42	3.0	1.0	38	6.9
78	33	34	0.7	3.9	PHQ432_0390 EZ301U	100	100	400	38.50	77/2	4500	8000	0.22	3.0	1.0	40	5.8
78	57	60	1.2	2.3	PHQ432_0390 EZ302U	179	179	400	38.50	77/2	4500	8000	0.32	3.0	1.0	40	6.4
78	74	78	1.5	1.8	PHQ432_0390 EZ303U	200	246	400	38.50	77/2	4500	8000	0.43	3.0	1.0	40	6.9
78	100	107	2.0	1.3	PHQ432_0390 EZ401U	200	246	400	38.50	77/2	4500	8000	0.96	3.0	1.0	40	8.3
109	41	43	1.5	3.0	PHQ432_0280 EZ302U	128	128	400	27.50	55/2	4500	8000	0.35	3.0	1.0	40	6.4
109	53	56	1.9	2.3	PHQ432_0280 EZ303U	179	179	400	27.50	55/2	4500	8000	0.46	3.0	1.0	40	6.9
109	72	77	2.6	1.7	PHQ432_0280 EZ401U	200	217	400	27.50	55/2	4500	8000	0.99	3.0	1.0	40	8.3
136	33	34	1.7	3.7	PHQ432_0220 EZ302U	102	102	400	22.00	22/1	4000	8000	0.39	3.0	1.0	41	6.4
136	42	45	2.2	2.8	PHQ432_0220 EZ303U	143	143	400	22.00	22/1	4000	8000	0.50	3.0	1.0	41	6.9
136	57	61	2.9	2.1	PHQ432_0220 EZ401U	174	174	400	22.00	22/1	4000	8000	1.0	3.0	1.0	41	8.3
136	96	106	4.9	1.2	PHQ432_0220 EZ402U	200	238	400	22.00	22/1	4000	8000	1.7	3.0	1.0	41	9.4
545	23	25	4.8	4.2	PHQ431_0055 EZ501U	84	84	400	5.500	11/2	3000	6000	3.2	3.0	1.0	44	8.0
545	25	27	5.2	3.8	PHQ431_0055 EZ402U	84	84	400	5.500	11/2	3000	6000	1.9	3.0	1.0	44	8.1
545	36	45	7.7	2.6	PHQ431_0055 EZ404U	153	153	400	5.500	11/2	3000	6000	3.2	3.0	1.0	44	10
545	39	42	8.2	2.4	PHQ431_0055 EZ502U	164	164	400	5.500	11/2	3000	6000	5.5	3.0	1.0	44	9.5
545	51	59	11	1.9	PHQ431_0055 EZ503U	200	220	400	5.500	11/2	3000	6000	7.8	3.0	1.0	44	11
545	71	84	15	1.3	PHQ431_0055 EZ505U	200	220	400	5.500	11/2	3000	6000	12	3.0	1.0	44	14
PHQ4 (n_{1N} = 6000 min^{-1}, $M_{2acc,max}$ = 200 Nm)																	
109	46	49	0.7	2.3	PHQ432_0550 EZ301U	143	143	400	55.00	55/1	4500	8000	0.21	3.0	1.0	38	5.8
109	77	86	1.1	1.3	PHQ432_0550 EZ302U	200	247	400	55.00	55/1	4500	8000	0.31	3.0	1.0	38	6.4
109	100	115	1.5	1.0	PHQ432_0550 EZ303U	200	247	400	55.00	55/1	4500	8000	0.42	3.0	1.0	38	6.9
156	32	34	0.8	3.2	PHQ432_0390 EZ301U	100	100	400	38.50	77/2	4500	8000	0.22	3.0	1.0	40	5.8
156	54	60	1.4	1.9	PHQ432_0390 EZ302U	179	179	400	38.50	77/2	4500	8000	0.32	3.0	1.0	40	6.4
156	70	81	1.8	1.5	PHQ432_0390 EZ303U	200	246	400	38.50	77/2	4500	8000	0.43	3.0	1.0	40	6.9
156	82	100	2.1	1.3	PHQ432_0390 EZ401U	200	246	400	38.50	77/2	4500	8000	0.96	3.0	1.0	40	8.3
218	23	24	1.0	4.2	PHQ432_0280 EZ301U	72	72	400	27.50	55/2	4500	8000	0.25	3.0	1.0	40	5.8
218	38	43	1.8	2.5	PHQ432_0280 EZ302U	128	128	400	27.50	55/2	4500	8000	0.35	3.0	1.0	40	6.4
218	50	58	2.3	1.9	PHQ432_0280 EZ303U	179	179	400	27.50	55/2	4500	8000	0.46	3.0	1.0	40	6.9
218	59	72	2.7	1.6	PHQ432_0280 EZ401U	200	217	400	27.50	55/2	4500	8000	0.99	3.0	1.0	40	8.3
218	90	125	4.1	1.1	PHQ432_0280 EZ402U	200	246	400	27.50	55/2	4500	8000	1.7	3.0	1.0	40	9.4
273	31	34	2.0	3.1	PHQ432_0220 EZ302U	102	102	400	22.00	22/1	4000	8000	0.39	3.0	1.0	41	6.4
273	40	46	2.6	2.4	PHQ432_0220 EZ303U	143	143	400	22.00	22/1	4000	8000	0.50	3.0	1.0	41	6.9
273	47	57	3.0	2.0	PHQ432_0220 EZ401U	174	174	400	22.00	22/1	4000	8000	1.0	3.0	1.0	41	8.3
273	72	100	4.6	1.3	PHQ432_0220 EZ402U	200	238	400	22.00	22/1	4000	8000	1.7	3.0	1.0	41	9.4
1091	18	23	4.8	4.2	PHQ431_0055 EZ501U	84	84	400	5.500	11/2	3000	6000	3.2	3.0	1.0	44	8.0
1091	18	26	4.9	4.1	PHQ431_0055 EZ402U	84	84	400	5.500	11/2	3000	6000	1.9	3.0	1.0	44	8.1
1091	27	41	7.3	2.8	PHQ431_0055 EZ502U	164	164	400	5.500	11/2	3000	6000	5.5	3.0	1.0	44	9.5
1091	31	44	8.1	2.5	PHQ431_0055 EZ404U	153	153	400	5.500	11/2	3000	6000	3.2	3.0	1.0	44	10
1091	33	56	8.7	2.3	PHQ431_0055 EZ503U	200	220	400	5.500	11/2	3000	6000	7.8	3.0	1.0	44	11
PHQ5 (n_{1N} = 3000 min^{-1}, $M_{2acc,max}$ = 550 Nm)																	
55	143	153	0.8	2.2	PHQ532_0550 EZ401U	435	435	948	55.00	55/1	4000	8000	0.97	3.0	1.0	95	11
55	220	240	1.2	1.5	PHQ532_0550 EZ501U	500	500	948	55.00	55/1	4000	8000	2.9	3.0	1.0	95	12
55	240	266	1.3	1.3	PHQ532_0550 EZ402U	500	500	948	55.00	55/1	4000	8000	1.7	3.0	1.0	95	12
78	100	107	0.9	3.2	PHQ532_0390 EZ401U	304	304	948	38.50	77/2	4000	8000	1.0	3.0	1.0	100	11
78	154	168	1.4	2.1	PHQ532_0390 EZ501U	530	552	948	38.50	77/2	4000	8000	3.0	3.0	1.0	100	12
78	168	186	1.5	1.9	PHQ532_0390 EZ402U	530	552	948	38.50	77/2	4000	8000	1.7	3.0	1.0	100	12
78	247	308	2.3	1.3	PHQ532_0390 EZ404U	530	552	948	38.50	77/2	4000	8000	3.1	3.0	1.0	100	14

n_{2N} [rpm]	M_{2N} [Nm]	$M_{2,0}$ [Nm]	a_{th}	S	Type	M_{2acc} [Nm]	M_{2accHT} [Nm]	M_{2NOT} [Nm]	i	i_{exakt}	n_{1maxDB} [rpm]	n_{1maxZB} [rpm]	J_1 [kgcm²]	$\Delta\varphi_2$ [arcmin]	$\Delta\varphi_{2red}$ [arcmin]	C_2 [Nm/ arcmin]	m [kg]
PHQ5 (n_{1N} = 3000 min^{-1}, $M_{2acc,max}$ = 550 Nm)																	
78	265	286	2.4	1.2	PHQ532_0390 EZ502U	530	552	948	38.50	77/2	4000	8000	5.3	3.0	1.0	100	14
109	72	77	1.2	4.2	PHQ532_0280 EZ401U	217	217	948	27.50	55/2	3700	7500	1.1	3.0	1.0	102	11
109	110	120	1.8	2.7	PHQ532_0280 EZ501U	409	409	948	27.50	55/2	3700	7500	3.1	3.0	1.0	102	12
109	120	133	1.9	2.5	PHQ532_0280 EZ402U	409	409	948	27.50	55/2	3700	7500	1.8	3.0	1.0	102	12
109	176	220	2.9	1.7	PHQ532_0280 EZ404U	540	562	948	27.50	55/2	3700	7500	3.1	3.0	1.0	102	14
109	189	205	3.1	1.6	PHQ532_0280 EZ502U	540	562	948	27.50	55/2	3700	7500	5.4	3.0	1.0	102	14
109	248	284	4.0	1.2	PHQ532_0280 EZ503U	540	562	948	27.50	55/2	3700	7500	7.7	3.0	1.0	102	15
136	88	96	2.1	3.3	PHQ532_0220 EZ501U	327	327	948	22.00	22/1	3500	7000	3.2	3.0	1.0	103	12
136	96	106	2.2	3.0	PHQ532_0220 EZ402U	327	327	948	22.00	22/1	3500	7000	1.9	3.0	1.0	103	12
136	141	176	3.3	2.1	PHQ532_0220 EZ404U	480	530	948	22.00	22/1	3500	7000	3.2	3.0	1.0	103	14
136	151	164	3.5	1.9	PHQ532_0220 EZ502U	480	530	948	22.00	22/1	3500	7000	5.5	3.0	1.0	103	14
136	198	227	4.6	1.5	PHQ532_0220 EZ503U	480	530	948	22.00	22/1	3500	7000	7.8	3.0	1.0	103	15
136	276	327	6.5	1.1	PHQ532_0220 EZ505U	480	530	948	22.00	22/1	3500	7000	12	3.0	1.0	103	18
545	63	76	6.4	3.5	PHQ531_0055 EZ702U	216	216	948	5.500	11/2	2500	5000	15	3.0	1.0	107	16
545	87	110	8.8	2.6	PHQ531_0055 EZ703U	343	343	948	5.500	11/2	2500	5000	22	3.0	1.0	107	18
545	112	159	11	2.0	PHQ531_0055 EZ705U	549	549	948	5.500	11/2	2500	5000	35	3.0	1.0	107	23
PHQ5 (n_{1N} = 4500 min^{-1}, $M_{2acc,max}$ = 550 Nm)																	
164	243	391	4.5	1.1	PHQ532_0280 EZ505U	540	562	948	27.50	55/2	3700	7500	12	3.0	1.0	102	18
205	194	313	5.2	1.3	PHQ532_0220 EZ505U	480	530	948	22.00	22/1	3500	7000	12	3.0	1.0	103	18
818	64	106	7.3	3.0	PHQ531_0055 EZ703U	343	343	948	5.500	11/2	2500	5000	22	3.0	1.0	107	18
818	87	158	10	2.2	PHQ531_0055 EZ705U	549	549	948	5.500	11/2	2500	5000	35	3.0	1.0	107	23
PHQ5 (n_{1N} = 6000 min^{-1}, $M_{2acc,max}$ = 540 Nm)																	
109	118	143	0.8	2.2	PHQ532_0550 EZ401U	435	435	948	55.00	55/1	4000	8000	0.97	3.0	1.0	95	11
109	174	225	1.2	1.5	PHQ532_0550 EZ501U	500	500	948	55.00	55/1	4000	8000	2.9	3.0	1.0	95	12
109	179	251	1.2	1.4	PHQ532_0550 EZ402U	500	500	948	55.00	55/1	4000	8000	1.7	3.0	1.0	95	12
156	82	100	1.0	3.1	PHQ532_0390 EZ401U	304	304	948	38.50	77/2	4000	8000	1.0	3.0	1.0	100	11
156	122	158	1.4	2.1	PHQ532_0390 EZ501U	530	552	948	38.50	77/2	4000	8000	3.0	3.0	1.0	100	12
156	125	175	1.4	2.0	PHQ532_0390 EZ402U	530	552	948	38.50	77/2	4000	8000	1.7	3.0	1.0	100	12
156	186	279	2.1	1.4	PHQ532_0390 EZ502U	530	552	948	38.50	77/2	4000	8000	5.3	3.0	1.0	100	14
156	208	301	2.4	1.2	PHQ532_0390 EZ404U	530	552	948	38.50	77/2	4000	8000	3.1	3.0	1.0	100	14
156	222	380	2.6	1.1	PHQ532_0390 EZ503U	530	552	948	38.50	77/2	4000	8000	7.7	3.0	1.0	100	15
218	59	72	1.2	4.0	PHQ532_0280 EZ401U	217	217	948	27.50	55/2	3700	7500	1.1	3.0	1.0	102	11
218	87	113	1.8	2.7	PHQ532_0280 EZ501U	409	409	948	27.50	55/2	3700	7500	3.1	3.0	1.0	102	12
218	90	125	1.8	2.7	PHQ532_0280 EZ402U	409	409	948	27.50	55/2	3700	7500	1.8	3.0	1.0	102	12
218	133	199	2.7	1.8	PHQ532_0280 EZ502U	540	562	948	27.50	55/2	3700	7500	5.4	3.0	1.0	102	14
218	148	215	3.0	1.6	PHQ532_0280 EZ404U	540	562	948	27.50	55/2	3700	7500	3.1	3.0	1.0	102	14
218	159	271	3.2	1.5	PHQ532_0280 EZ503U	540	562	948	27.50	55/2	3700	7500	7.7	3.0	1.0	102	15
273	47	57	1.4	4.9	PHQ532_0220 EZ401U	174	174	948	22.00	22/1	3500	7000	1.2	3.0	1.0	103	11
273	70	90	2.1	3.3	PHQ532_0220 EZ501U	327	327	948	22.00	22/1	3500	7000	3.2	3.0	1.0	103	12
273	72	100	2.1	3.2	PHQ532_0220 EZ402U	327	327	948	22.00	22/1	3500	7000	1.9	3.0	1.0	103	12
273	106	160	3.1	2.2	PHQ532_0220 EZ502U	480	530	948	22.00	22/1	3500	7000	5.5	3.0	1.0	103	14
273	119	172	3.5	1.9	PHQ532_0220 EZ404U	480	530	948	22.00	22/1	3500	7000	3.2	3.0	1.0	103	14
273	127	217	3.7	1.8	PHQ532_0220 EZ503U	480	530	948	22.00	22/1	3500	7000	7.8	3.0	1.0	103	15
PHQ7 (n_{1N} = 2000 min^{-1}, $M_{2acc,max}$ = 1050 Nm)																	
364	206	231	11	2.4	PHQ731_0055 EZ813U	739	739	2100	5.500	11/2	2200	5000	107	3.0	1.0	235	45
364	305	363	16	1.6	PHQ731_0055 EZ815U	1050	1050	2100	5.500	11/2	2200	5000	170	3.0	1.0	235	58
PHQ7 (n_{1N} = 3000 min^{-1}, $M_{2acc,max}$ = 1050 Nm)																	
14	554	594	0.2	1.2	PHQ733_2200 EZ401U	1050	1050	2100	220.0	220/1	4000	7000	0.97	3.0	1.0	222	20
16	485	520	0.2	1.4	PHQ733_1930 EZ401U	1050	1050	2100	192.5	385/2	4000	7000	1.0	3.0	1.0	223	20
19	388	416	0.3	1.8	PHQ733_1540 EZ401U	1050	1050	2100	154.0	154/1	4000	7000	1.0	3.0	1.0	223	20
19	596	651	0.4	1.1	PHQ733_1540 EZ501U	1050	1050	2100	154.0	154/1	4000	7000	3.0	3.0	1.0	223	21
19	651	721	0.4	1.0	PHQ733_1540 EZ402U	1050	1050	2100	154.0	154/1	4000	7000	1.7	3.0	1.0	223	21
22	347	371	0.3	2.0	PHQ733_1380 EZ401U	1050	1050	2100	137.5	275/2	3700	6500	1.1	3.0	1.0	224	20
22	532	582	0.4	1.3	PHQ733_1380 EZ501U	1050	1050	2100	137.5	275/2	3700	6500	3.1	3.0	1.0	224	21
22	582	644	0.4	1.2	PHQ733_1380 EZ402U	1050	1050	2100	137.5	275/2	3700	6500	1.8	3.0	1.0	224	21
27	277	297	0.3	2.5	PHQ733_1100 EZ401U	842	842	2100	110.0	110/1	3300	6000	1.2	3.0	1.0	224	20
27	426	465	0.5	1.6	PHQ733_1100 EZ501U	1050	1050	2100	110.0	110/1	3300	6000	3.2	3.0	1.0	224	21
27	465	515	0.5	1.5	PHQ733_1100 EZ402U	1050	1050	2100	110.0	110/1	3300	6000	1.9	3.0	1.0	224	21
34	222	238	0.3	3.1	PHQ733_0880 EZ401U	673	673	2100	88.00	88/1	3300	6000	1.2	3.0	1.0	224	20
34	341	372	0.5	2.0	PHQ733_0880 EZ501U	1050	1050	2100	88.00	88/1	3300	6000	3.2	3.0	1.0	224	21
34	372	412	0.6	1.8	PHQ733_0880 EZ402U	1050	1050	2100	88.00	88/1	3300	6000	1.9	3.0	1.0	224	21
34	546	681	0.8	1.2	PHQ733_0880 EZ404U	1050	1050	2100	88.00	88/1	3300	6000	3.3	3.0	1.0	224	23
34	586	634	0.9	1.2	PHQ733_0880 EZ502U	1050	1050	2100	88.00	88/1	3300	6000	5.5	3.0	1.0	224	22
55	220	240	0.7	3.1	PHQ732_0550 EZ501U	818	818	2100	55.00	55/1	3700	7000	3.1	3.0	1.0	213	18

n_{2N} [rpm]	M_{2N} [Nm]	$M_{2,0}$ [Nm]	a_{th}	S	Type	M_{2acc} [Nm]	M_{2accHT} [Nm]	M_{2NOT} [Nm]	i	i_{exakt}	n_{1maxDB} [rpm]	n_{1maxZB} [rpm]	J_1 [kgcm²]	$\Delta\varphi_2$ [arcmin]	$\Delta\varphi_{2red}$ [arcmin]	C_2 [Nm/arcmin]	m [kg]
PHQ7 (n_{1N} = 3000 min^{-1}, $M_{2acc,max}$ = 1050 Nm)																	
55	379	409	1.1	1.8	PHQ732_0550 EZ502U	1050	1050	2100	55.00	55/1	3700	7000	5.4	3.0	1.0	213	20
55	379	425	1.1	1.8	PHQ732_0550 EZ701U	1023	1023	2100	55.00	55/1	3700	7000	8.7	3.0	1.0	213	22
55	496	568	1.5	1.4	PHQ732_0550 EZ503U	1050	1050	2100	55.00	55/1	3700	7000	7.7	3.0	1.0	213	21
55	614	737	1.9	1.1	PHQ732_0550 EZ702U	1050	1050	2100	55.00	55/1	3700	7000	14	3.0	1.0	213	24
78	154	168	0.8	4.4	PHQ732_0390 EZ501U	573	573	2100	38.50	77/2	3700	7000	3.2	3.0	1.0	221	18
78	265	286	1.4	2.6	PHQ732_0390 EZ502U	1050	1050	2100	38.50	77/2	3700	7000	5.5	3.0	1.0	221	20
78	265	297	1.4	2.6	PHQ732_0390 EZ701U	716	716	2100	38.50	77/2	3700	7000	8.8	3.0	1.0	221	22
78	347	397	1.8	2.0	PHQ732_0390 EZ503U	1050	1050	2100	38.50	77/2	3700	7000	7.9	3.0	1.0	221	21
78	430	516	2.2	1.6	PHQ732_0390 EZ702U	1050	1050	2100	38.50	77/2	3700	7000	14	3.0	1.0	221	24
78	483	573	2.5	1.4	PHQ732_0390 EZ505U	1050	1050	2100	38.50	77/2	3700	7000	12	3.0	1.0	221	24
78	591	745	3.1	1.2	PHQ732_0390 EZ703U	1050	1050	2100	38.50	77/2	3700	7000	22	3.0	1.0	221	26
109	189	205	1.7	3.4	PHQ732_0280 EZ502U	793	793	2100	27.50	55/2	3500	7000	5.8	3.0	1.0	224	20
109	189	212	1.7	3.4	PHQ732_0280 EZ701U	512	512	2100	27.50	55/2	3500	7000	9.1	3.0	1.0	224	22
109	248	284	2.2	2.6	PHQ732_0280 EZ503U	1050	1050	2100	27.50	55/2	3500	7000	8.2	3.0	1.0	224	21
109	307	368	2.8	2.1	PHQ732_0280 EZ702U	1049	1049	2100	27.50	55/2	3500	7000	14	3.0	1.0	224	24
109	345	409	3.1	1.9	PHQ732_0280 EZ505U	1050	1050	2100	27.50	55/2	3500	7000	13	3.0	1.0	224	24
109	422	532	3.8	1.5	PHQ732_0280 EZ703U	1050	1050	2100	27.50	55/2	3500	7000	22	3.0	1.0	224	26
109	545	772	4.9	1.2	PHQ732_0280 EZ705U	1050	1050	2100	27.50	55/2	3500	7000	35	3.0	1.0	224	32
136	151	164	1.9	4.3	PHQ732_0220 EZ502U	634	634	1800	22.00	22/1	3000	6000	6.2	3.0	1.0	226	20
136	151	170	1.9	4.3	PHQ732_0220 EZ701U	409	409	1800	22.00	22/1	3000	6000	9.5	3.0	1.0	226	22
136	198	227	2.5	3.3	PHQ732_0220 EZ503U	880	880	1800	22.00	22/1	3000	6000	8.5	3.0	1.0	226	21
136	246	295	3.1	2.6	PHQ732_0220 EZ702U	839	839	1800	22.00	22/1	3000	6000	15	3.0	1.0	226	24
136	276	327	3.5	2.4	PHQ732_0220 EZ505U	900	1000	1800	22.00	22/1	3000	6000	13	3.0	1.0	226	24
136	338	426	4.2	1.9	PHQ732_0220 EZ703U	900	1000	1800	22.00	22/1	3000	6000	23	3.0	1.0	226	26
136	436	618	5.5	1.5	PHQ732_0220 EZ705U	900	1000	1800	22.00	22/1	3000	6000	35	3.0	1.0	226	32
PHQ7 (n_{1N} = 4000 min^{-1}, $M_{2acc,max}$ = 1050 Nm)																	
727	133	231	8.2	3.3	PHQ731_0055 EZ813U	739	739	2100	5.500	11/2	2200	5000	107	3.0	1.0	235	45
727	138	354	8.5	3.1	PHQ731_0055 EZ815U	1050	1050	2100	5.500	11/2	2200	5000	170	3.0	1.0	235	58
PHQ7 (n_{1N} = 4500 min^{-1}, $M_{2acc,max}$ = 1050 Nm)																	
82	486	783	1.7	1.2	PHQ732_0550 EZ505U	1050	1050	2100	55.00	55/1	3700	7000	12	3.0	1.0	213	24
117	340	548	2.0	1.7	PHQ732_0390 EZ505U	1050	1050	2100	38.50	77/2	3700	7000	12	3.0	1.0	221	24
117	433	716	2.6	1.4	PHQ732_0390 EZ703U	1050	1050	2100	38.50	77/2	3700	7000	22	3.0	1.0	221	26
117	587	1074	3.5	1.0	PHQ732_0390 EZ705U	1050	1050	2100	38.50	77/2	3700	7000	34	3.0	1.0	221	32
164	243	391	2.5	2.3	PHQ732_0280 EZ505U	1050	1050	2100	27.50	55/2	3500	7000	13	3.0	1.0	224	24
164	309	512	3.2	1.8	PHQ732_0280 EZ703U	1050	1050	2100	27.50	55/2	3500	7000	22	3.0	1.0	224	26
164	419	767	4.3	1.4	PHQ732_0280 EZ705U	1050	1050	2100	27.50	55/2	3500	7000	35	3.0	1.0	224	32
205	194	313	2.8	2.9	PHQ732_0220 EZ505U	900	1000	1800	22.00	22/1	3000	6000	13	3.0	1.0	226	24
205	248	409	3.5	2.3	PHQ732_0220 EZ703U	900	1000	1800	22.00	22/1	3000	6000	23	3.0	1.0	226	26
205	336	614	4.8	1.7	PHQ732_0220 EZ705U	900	1000	1800	22.00	22/1	3000	6000	35	3.0	1.0	226	32
PHQ7 (n_{1N} = 6000 min^{-1}, $M_{2acc,max}$ = 1050 Nm)																	
27	455	554	0.2	1.2	PHQ733_2200 EZ401U	1050	1050	2100	220.0	220/1	4000	7000	0.97	3.0	1.0	222	20
31	398	485	0.2	1.4	PHQ733_1930 EZ401U	1050	1050	2100	192.5	385/2	4000	7000	1.0	3.0	1.0	223	20
39	319	388	0.3	1.7	PHQ733_1540 EZ401U	1050	1050	2100	154.0	154/1	4000	7000	1.0	3.0	1.0	223	20
39	471	610	0.4	1.1	PHQ733_1540 EZ501U	1050	1050	2100	154.0	154/1	4000	7000	3.0	3.0	1.0	223	21
39	485	679	0.4	1.1	PHQ733_1540 EZ402U	1050	1050	2100	154.0	154/1	4000	7000	1.7	3.0	1.0	223	21
44	285	347	0.3	1.9	PHQ733_1380 EZ401U	1050	1050	2100	137.5	275/2	3700	6500	1.1	3.0	1.0	224	20
44	421	545	0.4	1.3	PHQ733_1380 EZ501U	1050	1050	2100	137.5	275/2	3700	6500	3.1	3.0	1.0	224	21
44	433	606	0.4	1.2	PHQ733_1380 EZ402U	1050	1050	2100	137.5	275/2	3700	6500	1.8	3.0	1.0	224	21
55	228	277	0.3	2.4	PHQ733_1100 EZ401U	842	842	2100	110.0	110/1	3300	6000	1.2	3.0	1.0	224	20
55	337	436	0.5	1.6	PHQ733_1100 EZ501U	1050	1050	2100	110.0	110/1	3300	6000	3.2	3.0	1.0	224	21
55	347	485	0.5	1.6	PHQ733_1100 EZ402U	1050	1050	2100	110.0	110/1	3300	6000	1.9	3.0	1.0	224	21
55	515	772	0.7	1.0	PHQ733_1100 EZ502U	1050	1050	2100	110.0	110/1	3300	6000	5.5	3.0	1.0	224	22
68	182	222	0.3	3.0	PHQ733_0880 EZ401U	673	673	2100	88.00	88/1	3300	6000	1.2	3.0	1.0	224	20
68	269	348	0.5	2.0	PHQ733_0880 EZ501U	1050	1050	2100	88.00	88/1	3300	6000	3.2	3.0	1.0	224	21
68	277	388	0.5	1.9	PHQ733_0880 EZ402U	1050	1050	2100	88.00	88/1	3300	6000	1.9	3.0	1.0	224	21
68	412	618	0.8	1.3	PHQ733_0880 EZ502U	1050	1050	2100	88.00	88/1	3300	6000	5.5	3.0	1.0	224	22
68	459	665	0.9	1.2	PHQ733_0880 EZ404U	1050	1050	2100	88.00	88/1	3300	6000	3.3	3.0	1.0	224	23
68	491	840	0.9	1.1	PHQ733_0880 EZ503U	1050	1050	2100	88.00	88/1	3300	6000	7.9	3.0	1.0	224	24
109	174	225	0.7	3.1	PHQ732_0550 EZ501U	818	818	2100	55.00	55/1	3700	7000	3.1	3.0	1.0	213	18
109	266	399	1.0	2.0	PHQ732_0550 EZ502U	1050	1050	2100	55.00	55/1	3700	7000	5.4	3.0	1.0	213	20
109	266	404	1.0	2.0	PHQ732_0550 EZ701U	1023	1023	2100	55.00	55/1	3700	7000	8.7	3.0	1.0	213	22
109	317	542	1.2	1.7	PHQ732_0550 EZ503U	1050	1050	2100	55.00	55/1	3700	7000	7.7	3.0	1.0	213	21
109	368	731	1.4	1.5	PHQ732_0550 EZ702U	1050	1050	2100	55.00	55/1	3700	7000	14	3.0	1.0	213	24
156	122	158	0.8	4.4	PHQ732_0390 EZ501U	573	573	2100	38.50	77/2	3700	7000	3.2	3.0	1.0	221	18
156	186	279	1.2	2.9	PHQ732_0390 EZ502U	1050	1050	2100	38.50	77/2	3700	7000	5.5	3.0	1.0	221	20

n_{2N} [rpm]	M_{2N} [Nm]	$M_{2,0}$ [Nm]	a_{th}	S	Type	M_{2acc} [Nm]	M_{2accHT} [Nm]	M_{2NOT} [Nm]	i	i_{exakt}	n_{1maxDB} [rpm]	n_{1maxZB} [rpm]	J_1 [kgcm²]	$\Delta\varphi_2$ [arcmin]	$\Delta\varphi_{2red}$ [arcmin]	C_2 [Nm/ arcmin]	m [kg]
PHQ7 (n_{1N} = 6000 min^{-1}, $M_{2acc,max}$ = 1050 Nm)																	
156	186	283	1.2	2.9	PHQ732_0390 EZ701U	716	716	2100	38.50	77/2	3700	7000	8.8	3.0	1.0	221	22
156	222	380	1.4	2.4	PHQ732_0390 EZ503U	1050	1050	2100	38.50	77/2	3700	7000	7.9	3.0	1.0	221	21
156	258	512	1.7	2.1	PHQ732_0390 EZ702U	1050	1050	2100	38.50	77/2	3700	7000	14	3.0	1.0	221	24
218	133	199	1.5	3.9	PHQ732_0280 EZ502U	793	793	2100	27.50	55/2	3500	7000	5.8	3.0	1.0	224	20
218	133	202	1.5	3.9	PHQ732_0280 EZ701U	512	512	2100	27.50	55/2	3500	7000	9.1	3.0	1.0	224	22
218	159	271	1.8	3.3	PHQ732_0280 EZ503U	1050	1050	2100	27.50	55/2	3500	7000	8.2	3.0	1.0	224	21
218	184	366	2.1	2.8	PHQ732_0280 EZ702U	1049	1049	2100	27.50	55/2	3500	7000	14	3.0	1.0	224	24
273	106	160	1.7	4.8	PHQ732_0220 EZ502U	634	634	1800	22.00	22/1	3000	6000	6.2	3.0	1.0	226	20
273	106	162	1.7	4.8	PHQ732_0220 EZ701U	409	409	1800	22.00	22/1	3000	6000	9.5	3.0	1.0	226	22
273	127	217	2.0	4.1	PHQ732_0220 EZ503U	880	880	1800	22.00	22/1	3000	6000	8.5	3.0	1.0	226	21
273	147	293	2.3	3.5	PHQ732_0220 EZ702U	839	839	1800	22.00	22/1	3000	6000	15	3.0	1.0	226	24
PHQ8 (n_{1N} = 2000 min^{-1}, $M_{2acc,max}$ = 2800 Nm)																	
52	1396	1566	3.1	1.2	PHQ832_0390 EZ813U	2800	3300	4964	38.50	77/2	3000	6000	106	3.0	1.0	701	70
73	997	1118	3.7	1.7	PHQ832_0280 EZ813U	2800	3300	4964	27.50	55/2	2700	5500	107	3.0	1.0	715	70
73	1477	1759	5.5	1.2	PHQ832_0280 EZ815U	2800	3300	4964	27.50	55/2	2700	5500	170	3.0	1.0	715	82
91	798	895	4.1	2.1	PHQ832_0220 EZ813U	2800	2864	4964	22.00	22/1	2500	4500	109	3.0	1.0	720	70
91	1182	1407	6.1	1.4	PHQ832_0220 EZ815U	2800	3300	4964	22.00	22/1	2500	4500	172	3.0	1.0	720	82
PHQ8 (n_{1N} = 3000 min^{-1}, $M_{2acc,max}$ = 2800 Nm)																	
7.8	1490	1629	0.1	1.1	PHQ833_3850 EZ501U	2800	3300	4964	385.0	385/1	3700	6500	3.0	3.0	1.0	699	40
11	1064	1163	0.1	1.6	PHQ833_2750 EZ501U	2800	3300	4964	275.0	275/1	3700	6500	3.1	3.0	1.0	707	40
14	851	931	0.1	2.0	PHQ833_2200 EZ501U	2800	3168	4964	220.0	220/1	3700	6500	3.1	3.0	1.0	705	40
14	1465	1584	0.2	1.2	PHQ833_2200 EZ502U	2800	3300	4964	220.0	220/1	3700	6500	5.4	3.0	1.0	705	41
14	1465	1643	0.2	1.2	PHQ833_2200 EZ701U	2800	3300	4964	220.0	220/1	3700	6500	8.7	3.0	1.0	705	43
16	745	814	0.1	2.3	PHQ833_1930 EZ501U	2772	2772	4964	192.5	385/2	3700	6500	3.2	3.0	1.0	710	40
16	1282	1386	0.3	1.3	PHQ833_1930 EZ502U	2800	3300	4964	192.5	385/2	3700	6500	5.5	3.0	1.0	710	41
16	1282	1438	0.3	1.3	PHQ833_1930 EZ701U	2800	3300	4964	192.5	385/2	3700	6500	8.8	3.0	1.0	710	43
16	1681	1923	0.3	1.0	PHQ833_1930 EZ503U	2800	3300	4964	192.5	385/2	3700	6500	7.9	3.0	1.0	710	43
19	596	651	0.2	2.9	PHQ833_1540 EZ501U	2218	2218	4964	154.0	154/1	3700	6500	3.2	3.0	1.0	710	40
19	1026	1109	0.3	1.7	PHQ833_1540 EZ502U	2800	3300	4964	154.0	154/1	3700	6500	5.5	3.0	1.0	710	41
19	1026	1150	0.3	1.7	PHQ833_1540 EZ701U	2772	2772	4964	154.0	154/1	3700	6500	8.8	3.0	1.0	710	43
19	1344	1538	0.4	1.3	PHQ833_1540 EZ503U	2800	3300	4964	154.0	154/1	3700	6500	7.9	3.0	1.0	710	43
19	1663	1996	0.5	1.0	PHQ833_1540 EZ702U	2800	3300	4964	154.0	154/1	3700	6500	14	3.0	1.0	710	46
22	532	582	0.2	3.2	PHQ833_1380 EZ501U	1980	1980	4964	137.5	275/2	3500	6000	3.5	3.0	1.0	711	40
22	916	990	0.3	1.9	PHQ833_1380 EZ502U	2800	3300	4964	137.5	275/2	3500	6000	5.8	3.0	1.0	711	41
22	916	1027	0.3	1.9	PHQ833_1380 EZ701U	2475	2475	4964	137.5	275/2	3500	6000	9.1	3.0	1.0	711	43
22	1200	1374	0.4	1.4	PHQ833_1380 EZ503U	2800	3300	4964	137.5	275/2	3500	6000	8.2	3.0	1.0	711	43
22	1485	1782	0.5	1.1	PHQ833_1380 EZ702U	2800	3300	4964	137.5	275/2	3500	6000	14	3.0	1.0	711	46
22	1671	1980	0.6	1.0	PHQ833_1380 EZ505U	2800	3300	4964	137.5	275/2	3500	6000	13	3.0	1.0	711	46
27	426	465	0.2	4.0	PHQ833_1100 EZ501U	1584	1584	4964	110.0	110/1	3000	5000	3.9	3.0	1.0	712	40
27	733	792	0.3	2.3	PHQ833_1100 EZ502U	2800	3069	4964	110.0	110/1	3000	5000	6.2	3.0	1.0	712	41
27	733	822	0.3	2.3	PHQ833_1100 EZ701U	1980	1980	4964	110.0	110/1	3000	5000	9.5	3.0	1.0	712	43
27	960	1099	0.4	1.8	PHQ833_1100 EZ503U	2800	3300	4964	110.0	110/1	3000	5000	8.5	3.0	1.0	712	43
27	1188	1426	0.6	1.4	PHQ833_1100 EZ702U	2800	3300	4964	110.0	110/1	3000	5000	15	3.0	1.0	712	46
27	1337	1584	0.6	1.3	PHQ833_1100 EZ505U	2800	3300	4964	110.0	110/1	3000	5000	13	3.0	1.0	712	46
27	1634	2059	0.8	1.0	PHQ833_1100 EZ703U	2800	3300	4964	110.0	110/1	3000	5000	23	3.0	1.0	712	48
34	341	372	0.2	5.0	PHQ833_0880 EZ501U	1267	1267	4964	88.00	88/1	3000	5000	4.0	3.0	1.0	712	40
34	586	634	0.4	2.9	PHQ833_0880 EZ502U	2455	2455	4964	88.00	88/1	3000	5000	6.3	3.0	1.0	712	41
34	586	657	0.4	2.9	PHQ833_0880 EZ701U	1584	1584	4964	88.00	88/1	3000	5000	9.6	3.0	1.0	712	43
34	768	879	0.5	2.2	PHQ833_0880 EZ503U	2800	3300	4964	88.00	88/1	3000	5000	8.6	3.0	1.0	712	43
34	950	1140	0.6	1.8	PHQ833_0880 EZ702U	2800	3247	4964	88.00	88/1	3000	5000	15	3.0	1.0	712	46
34	1069	1267	0.7	1.6	PHQ833_0880 EZ505U	2800	3300	4964	88.00	88/1	3000	5000	13	3.0	1.0	712	46
34	1307	1647	0.8	1.3	PHQ833_0880 EZ703U	2800	3300	4964	88.00	88/1	3000	5000	23	3.0	1.0	712	48
34	1687	2392	1.1	1.0	PHQ833_0880 EZ705U	2800	3300	4964	88.00	88/1	3000	5000	35	3.0	1.0	712	53
55	379	425	0.5	4.5	PHQ832_0550 EZ701U	1023	1023	4964	55.00	55/1	3000	6000	9.2	3.0	1.0	670	42
55	614	737	0.8	2.8	PHQ832_0550 EZ702U	2097	2097	4964	55.00	55/1	3000	6000	14	3.0	1.0	670	45
55	844	1064	1.1	2.0	PHQ832_0550 EZ703U	2700	2990	4964	55.00	55/1	3000	6000	22	3.0	1.0	670	47
55	1089	1545	1.4	1.6	PHQ832_0550 EZ705U	2700	2990	4964	55.00	55/1	3000	6000	35	3.0	1.0	670	52
78	430	516	1.0	4.0	PHQ832_0390 EZ702U	1468	1468	4964	38.50	77/2	3000	6000	15	3.0	1.0	701	45
78	591	745	1.3	2.9	PHQ832_0390 EZ703U	2327	2327	4964	38.50	77/2	3000	6000	23	3.0	1.0	701	47
78	763	1081	1.7	2.2	PHQ832_0390 EZ705U	2800	3300	4964	38.50	77/2	3000	6000	35	3.0	1.0	701	52
109	422	532	1.6	4.0	PHQ832_0280 EZ703U	1662	1662	4964	27.50	55/2	2700	5500	24	3.0	1.0	715	47
109	545	772	2.0	3.1	PHQ832_0280 EZ705U	2660	2660	4964	27.50	55/2	2700	5500	37	3.0	1.0	715	52
136	436	618	2.3	3.9	PHQ832_0220 EZ705U	2128	2128	4745	22.00	22/1	2500	4500	38	3.0	1.0	720	52

n_{2N} [rpm]	M_{2N} [Nm]	$M_{2,0}$ [Nm]	a_{th}	S	Type	M_{2acc} [Nm]	M_{2accHT} [Nm]	M_{2NOT} [Nm]	i	i_{exakt}	n_{1maxDB} [rpm]	n_{1maxZB} [rpm]	J_1 [kgcm²]	$\Delta\varphi_2$ [arcmin]	$\Delta\varphi_{2red}$ [arcmin]	C_2 [Nm/arcmin]	m [kg]
PHQ8 (n_{1N} = 4000 min^{-1}, $M_{2acc,max}$ = 2800 Nm)																	
73	1289	2235	1.9	1.2	PHQ832_0550 EZ813U	2700	2990	4964	55.00	55/1	3000	6000	105	3.0	1.0	670	70
73	1336	3434	1.9	1.2	PHQ832_0550 EZ815U	2700	2990	4964	55.00	55/1	3000	6000	168	3.0	1.0	670	82
104	902	1565	2.2	1.7	PHQ832_0390 EZ813U	2800	3300	4964	38.50	77/2	3000	6000	106	3.0	1.0	701	70
104	935	2404	2.3	1.7	PHQ832_0390 EZ815U	2800	3300	4964	38.50	77/2	3000	6000	169	3.0	1.0	701	82
145	644	1118	2.6	2.4	PHQ832_0280 EZ813U	2800	3300	4964	27.50	55/2	2700	5500	107	3.0	1.0	715	70
145	668	1717	2.7	2.3	PHQ832_0280 EZ815U	2800	3300	4964	27.50	55/2	2700	5500	170	3.0	1.0	715	82
182	516	894	2.9	3.0	PHQ832_0220 EZ813U	2800	2864	4964	22.00	22/1	2500	4500	109	3.0	1.0	720	70
182	534	1374	3.1	2.9	PHQ832_0220 EZ815U	2800	3300	4964	22.00	22/1	2500	4500	172	3.0	1.0	720	82
PHQ8 (n_{1N} = 4500 min^{-1}, $M_{2acc,max}$ = 2800 Nm)																	
29	1317	2121	0.4	1.1	PHQ833_1540 EZ505U	2800	3300	4964	154.0	154/1	3700	6500	12	3.0	1.0	710	46
33	1176	1893	0.4	1.3	PHQ833_1380 EZ505U	2800	3300	4964	137.5	275/2	3500	6000	13	3.0	1.0	711	46
41	941	1515	0.5	1.6	PHQ833_1100 EZ505U	2800	3300	4964	110.0	110/1	3000	5000	13	3.0	1.0	712	46
41	1198	1980	0.6	1.2	PHQ833_1100 EZ703U	2800	3300	4964	110.0	110/1	3000	5000	23	3.0	1.0	712	48
51	752	1212	0.6	2.0	PHQ833_0880 EZ505U	2800	3300	4964	88.00	88/1	3000	5000	13	3.0	1.0	712	46
51	958	1584	0.7	1.6	PHQ833_0880 EZ703U	2800	3300	4964	88.00	88/1	3000	5000	23	3.0	1.0	712	48
51	1299	2376	1.0	1.1	PHQ833_0880 EZ705U	2800	3300	4964	88.00	88/1	3000	5000	35	3.0	1.0	712	53
82	619	1023	0.9	2.4	PHQ832_0550 EZ703U	2700	2990	4964	55.00	55/1	3000	6000	22	3.0	1.0	670	47
82	839	1535	1.3	1.8	PHQ832_0550 EZ705U	2700	2990	4964	55.00	55/1	3000	6000	35	3.0	1.0	670	52
117	433	716	1.1	3.4	PHQ832_0390 EZ703U	2327	2327	4964	38.50	77/2	3000	6000	23	3.0	1.0	701	47
117	587	1074	1.5	2.5	PHQ832_0390 EZ705U	2800	3300	4964	38.50	77/2	3000	6000	35	3.0	1.0	701	52
164	309	512	1.3	4.8	PHQ832_0280 EZ703U	1662	1662	4964	27.50	55/2	2700	5500	24	3.0	1.0	715	47
164	419	767	1.8	3.5	PHQ832_0280 EZ705U	2660	2660	4964	27.50	55/2	2700	5500	37	3.0	1.0	715	52
205	336	614	2.0	4.4	PHQ832_0220 EZ705U	2128	2128	4745	22.00	22/1	2500	4500	38	3.0	1.0	720	52
PHQ8 (n_{1N} = 6000 min^{-1}, $M_{2acc,max}$ = 2800 Nm)																	
16	1178	1525	0.1	1.1	PHQ833_3850 EZ501U	2800	3300	4964	385.0	385/1	3700	6500	3.0	3.0	1.0	699	40
22	842	1089	0.1	1.6	PHQ833_2750 EZ501U	2800	3300	4964	275.0	275/1	3700	6500	3.1	3.0	1.0	707	40
22	1287	1931	0.2	1.0	PHQ833_2750 EZ502U	2800	3300	4964	275.0	275/1	3700	6500	5.4	3.0	1.0	707	41
22	1287	1955	0.2	1.0	PHQ833_2750 EZ701U	2800	3300	4964	275.0	275/1	3700	6500	8.7	3.0	1.0	707	43
27	673	871	0.1	2.0	PHQ833_2200 EZ501U	2800	3168	4964	220.0	220/1	3700	6500	3.1	3.0	1.0	705	40
27	1030	1544	0.2	1.3	PHQ833_2200 EZ502U	2800	3300	4964	220.0	220/1	3700	6500	5.4	3.0	1.0	705	41
27	1030	1564	0.2	1.3	PHQ833_2200 EZ701U	2800	3300	4964	220.0	220/1	3700	6500	8.7	3.0	1.0	705	43
27	1228	2099	0.3	1.1	PHQ833_2200 EZ503U	2800	3300	4964	220.0	220/1	3700	6500	7.8	3.0	1.0	705	43
31	589	762	0.1	2.3	PHQ833_1930 EZ501U	2772	2772	4964	192.5	385/2	3700	6500	3.2	3.0	1.0	710	40
31	901	1351	0.2	1.5	PHQ833_1930 EZ502U	2800	3300	4964	192.5	385/2	3700	6500	5.5	3.0	1.0	710	41
31	901	1369	0.2	1.5	PHQ833_1930 EZ701U	2800	3300	4964	192.5	385/2	3700	6500	8.8	3.0	1.0	710	43
31	1074	1836	0.3	1.3	PHQ833_1930 EZ503U	2800	3300	4964	192.5	385/2	3700	6500	7.9	3.0	1.0	710	43
31	1247	2477	0.3	1.1	PHQ833_1930 EZ702U	2800	3300	4964	192.5	385/2	3700	6500	14	3.0	1.0	710	46
39	471	610	0.2	2.9	PHQ833_1540 EZ501U	2218	2218	4964	154.0	154/1	3700	6500	3.2	3.0	1.0	710	40
39	721	1081	0.3	1.9	PHQ833_1540 EZ502U	2800	3300	4964	154.0	154/1	3700	6500	5.5	3.0	1.0	710	41
39	721	1095	0.3	1.9	PHQ833_1540 EZ701U	2772	2772	4964	154.0	154/1	3700	6500	8.8	3.0	1.0	710	43
39	859	1469	0.3	1.6	PHQ833_1540 EZ503U	2800	3300	4964	154.0	154/1	3700	6500	7.9	3.0	1.0	710	43
39	998	1982	0.4	1.4	PHQ833_1540 EZ702U	2800	3300	4964	154.0	154/1	3700	6500	14	3.0	1.0	710	46
44	421	545	0.2	3.2	PHQ833_1380 EZ501U	1980	1980	4964	137.5	275/2	3500	6000	3.5	3.0	1.0	711	40
44	644	965	0.3	2.1	PHQ833_1380 EZ502U	2800	3300	4964	137.5	275/2	3500	6000	5.8	3.0	1.0	711	41
44	644	978	0.3	2.1	PHQ833_1380 EZ701U	2475	2475	4964	137.5	275/2	3500	6000	9.1	3.0	1.0	711	43
44	767	1312	0.3	1.8	PHQ833_1380 EZ503U	2800	3300	4964	137.5	275/2	3500	6000	8.2	3.0	1.0	711	43
44	891	1770	0.4	1.5	PHQ833_1380 EZ702U	2800	3300	4964	137.5	275/2	3500	6000	14	3.0	1.0	711	46
109	368	731	0.6	3.7	PHQ832_0550 EZ702U	2097	2097	4964	55.00	55/1	3000	6000	14	3.0	1.0	670	45
PHQ9 (n_{1N} = 2000 min^{-1}, $M_{2acc,max}$ = 6600 Nm)																	
21	3369	3778	0.9	1.1	PHQ943_0960 EZ813U	6600	6600	13200	96.00	96/1	2500	4500	109	3.0	1.0	1207	117
28	2527	2834	1.1	1.5	PHQ943_0720 EZ813U	6600	6600	13200	72.00	72/1	2200	4500	111	3.0	1.0	1205	117
28	3742	4456	1.6	1.0	PHQ943_0720 EZ815U	6600	6600	13200	72.00	72/1	2200	4500	174	3.0	1.0	1205	130
33	2176	2440	1.1	1.9	PHQ942_0600 EZ813U	6600	6600	13200	60.00	60/1	2800	4500	108	3.0	1.0	1149	109
33	3222	3837	1.7	1.3	PHQ942_0600 EZ815U	6600	6600	13200	60.00	60/1	2800	4500	171	3.0	1.0	1149	122
48	1523	1708	1.2	3.0	PHQ942_0420 EZ813U	5468	5468	13200	42.00	42/1	2800	4500	111	3.0	1.0	1195	109
48	2256	2686	1.8	2.0	PHQ942_0420 EZ815U	6600	6600	13200	42.00	42/1	2800	4500	174	3.0	1.0	1195	122
67	1088	1220	1.5	3.9	PHQ942_0300 EZ813U	3906	3906	13200	30.00	30/1	2500	4000	116	3.0	1.0	1214	109
67	1611	1918	2.3	2.6	PHQ942_0300 EZ815U	5580	5580	13200	30.00	30/1	2500	4000	179	3.0	1.0	1214	122
83	870	976	1.9	4.4	PHQ942_0240 EZ813U	3125	3125	11506	24.00	24/1	2000	3500	124	3.0	1.0	1225	109
83	1289	1535	2.8	2.9	PHQ942_0240 EZ815U	4464	4464	11506	24.00	24/1	2000	3500	187	3.0	1.0	1225	122
111	967	1151	3.3	3.9	PHQ942_0180 EZ815U	3348	3348	8655	18.00	18/1	1800	3000	213	3.0	1.0	1237	122
PHQ9 (n_{1N} = 3000 min^{-1}, $M_{2acc,max}$ = 6600 Nm)																	
5.0	3996	4482	0.1	1.1	PHQ943_6000 EZ701U	6600	6600	13200	600.0	600/1	3000	6000	9.0	3.0	1.0	1145	90
7.1	2797	3137	0.1	1.6	PHQ943_4200 EZ701U	6600	6600	13200	420.0	420/1	3000	6000	9.1	3.0	1.0	1184	90

n_{2N} [rpm]	M_{2N} [Nm]	$M_{2,0}$ [Nm]	a_{th}	S	Type	M_{2acc} [Nm]	M_{2accHT} [Nm]	M_{2NOT} [Nm]	i	i_{exakt}	n_{1maxDB} [rpm]	n_{1maxZB} [rpm]	J_1 [kgcm²]	$\Delta\varphi_2$ [arcmin]	$\Delta\varphi_{2red}$ [arcmin]	C_2 [Nm/arcmin]	m [kg]
PHQ9 (n_{1N} = 3000 min^{-1}, $M_{2acc,max}$ = 6600 Nm)																	
10	1998	2241	0.1	2.1	PHQ943_3000 EZ701U	5400	5400	13200	300.0	300/1	3000	6000	9.1	3.0	1.0	1196	90
10	3240	3888	0.1	1.3	PHQ943_3000 EZ702U	6600	6600	13200	300.0	300/1	3000	6000	14	3.0	1.0	1196	92
13	1598	1793	0.1	2.4	PHQ943_2400 EZ701U	4320	4320	13200	240.0	240/1	3000	6000	9.2	3.0	1.0	1198	90
13	2592	3110	0.2	1.5	PHQ943_2400 EZ702U	6600	6600	13200	240.0	240/1	3000	6000	14	3.0	1.0	1198	92
13	3564	4493	0.2	1.1	PHQ943_2400 EZ703U	6600	6600	13200	240.0	240/1	3000	6000	22	3.0	1.0	1198	94
14	1399	1569	0.1	3.0	PHQ943_2100 EZ701U	3780	3780	13200	210.0	210/1	3000	6000	9.7	3.0	1.0	1200	90
14	2268	2722	0.2	1.9	PHQ943_2100 EZ702U	6600	6600	13200	210.0	210/1	3000	6000	15	3.0	1.0	1200	92
14	3119	3931	0.2	1.3	PHQ943_2100 EZ703U	6600	6600	13200	210.0	210/1	3000	6000	23	3.0	1.0	1200	94
14	4026	5708	0.3	1.0	PHQ943_2100 EZ705U	6600	6600	13200	210.0	210/1	3000	6000	35	3.0	1.0	1200	100
18	1119	1255	0.1	3.4	PHQ943_1680 EZ701U	3024	3024	13200	168.0	168/1	3000	6000	9.9	3.0	1.0	1204	90
18	1814	2177	0.2	2.1	PHQ943_1680 EZ702U	6199	6199	13200	168.0	168/1	3000	6000	15	3.0	1.0	1204	92
18	2495	3145	0.3	1.5	PHQ943_1680 EZ703U	6600	6600	13200	168.0	168/1	3000	6000	23	3.0	1.0	1204	94
18	3221	4566	0.4	1.2	PHQ943_1680 EZ705U	6600	6600	13200	168.0	168/1	3000	6000	35	3.0	1.0	1204	100
20	999	1121	0.1	4.2	PHQ943_1500 EZ701U	2700	2700	13200	150.0	150/1	2700	5500	11	3.0	1.0	1202	90
20	1620	1944	0.2	2.6	PHQ943_1500 EZ702U	5535	5535	13200	150.0	150/1	2700	5500	16	3.0	1.0	1202	92
20	2228	2808	0.3	1.9	PHQ943_1500 EZ703U	6600	6600	13200	150.0	150/1	2700	5500	24	3.0	1.0	1202	94
20	2876	4077	0.4	1.5	PHQ943_1500 EZ705U	6600	6600	13200	150.0	150/1	2700	5500	36	3.0	1.0	1202	100
25	1296	1555	0.2	3.2	PHQ943_1200 EZ702U	4428	4428	13200	120.0	120/1	2500	4500	18	3.0	1.0	1203	92
25	1782	2246	0.3	2.4	PHQ943_1200 EZ703U	6600	6600	13200	120.0	120/1	2500	4500	26	3.0	1.0	1203	94
25	2300	3262	0.4	1.8	PHQ943_1200 EZ705U	6600	6600	13200	120.0	120/1	2500	4500	38	3.0	1.0	1203	100
31	1037	1244	0.3	3.7	PHQ943_0960 EZ702U	3542	3542	13200	96.00	96/1	2500	4500	18	3.0	1.0	1207	92
31	1426	1797	0.4	2.7	PHQ943_0960 EZ703U	5616	5616	13200	96.00	96/1	2500	4500	26	3.0	1.0	1207	94
31	1840	2609	0.5	2.1	PHQ943_0960 EZ705U	6600	6600	13200	96.00	96/1	2500	4500	39	3.0	1.0	1207	100
42	778	933	0.3	4.9	PHQ943_0720 EZ702U	2657	2657	13200	72.00	72/1	2200	4500	20	3.0	1.0	1205	92
42	1069	1348	0.5	3.6	PHQ943_0720 EZ703U	4212	4212	13200	72.00	72/1	2200	4500	28	3.0	1.0	1205	94
42	1380	1957	0.6	2.8	PHQ943_0720 EZ705U	6600	6600	13200	72.00	72/1	2200	4500	40	3.0	1.0	1205	100
PHQ9 (n_{1N} = 4000 min^{-1}, $M_{2acc,max}$ = 6600 Nm)																	
27	3402	5900	0.4	1.2	PHQ943_1500 EZ813U	6600	6600	13200	150.0	150/1	2700	5500	107	3.0	1.0	1202	117
27	3525	9064	0.4	1.2	PHQ943_1500 EZ815U	6600	6600	13200	150.0	150/1	2700	5500	170	3.0	1.0	1202	130
33	2722	4720	0.5	1.5	PHQ943_1200 EZ813U	6600	6600	13200	120.0	120/1	2500	4500	109	3.0	1.0	1203	117
33	2820	7251	0.5	1.5	PHQ943_1200 EZ815U	6600	6600	13200	120.0	120/1	2500	4500	172	3.0	1.0	1203	130
42	2177	3776	0.6	1.7	PHQ943_0960 EZ813U	6600	6600	13200	96.00	96/1	2500	4500	109	3.0	1.0	1207	117
42	2256	5801	0.6	1.7	PHQ943_0960 EZ815U	6600	6600	13200	96.00	96/1	2500	4500	172	3.0	1.0	1207	130
56	1633	2832	0.7	2.3	PHQ943_0720 EZ813U	6600	6600	13200	72.00	72/1	2200	4500	111	3.0	1.0	1205	117
56	1692	4351	0.7	2.2	PHQ943_0720 EZ815U	6600	6600	13200	72.00	72/1	2200	4500	174	3.0	1.0	1205	130
67	1406	2438	0.9	2.3	PHQ942_0600 EZ813U	6600	6600	13200	60.00	60/1	2800	4500	108	3.0	1.0	1149	109
67	1457	3746	0.9	2.2	PHQ942_0600 EZ815U	6600	6600	13200	60.00	60/1	2800	4500	171	3.0	1.0	1149	122
95	984	1707	0.8	4.6	PHQ942_0420 EZ813U	5468	5468	13200	42.00	42/1	2800	4500	111	3.0	1.0	1195	109
95	1020	2622	0.8	4.4	PHQ942_0420 EZ815U	6600	6600	13200	42.00	42/1	2800	4500	174	3.0	1.0	1195	122
PHQ9 (n_{1N} = 4500 min^{-1}, $M_{2acc,max}$ = 6600 Nm)																	
15	3267	5400	0.1	1.3	PHQ943_3000 EZ703U	6600	6600	13200	300.0	300/1	3000	6000	22	3.0	1.0	1196	94
19	2614	4320	0.2	1.5	PHQ943_2400 EZ703U	6600	6600	13200	240.0	240/1	3000	6000	22	3.0	1.0	1198	94
19	3542	6480	0.2	1.1	PHQ943_2400 EZ705U	6600	6600	13200	240.0	240/1	3000	6000	35	3.0	1.0	1198	100
21	2287	3780	0.2	1.8	PHQ943_2100 EZ703U	6600	6600	13200	210.0	210/1	3000	6000	23	3.0	1.0	1200	94
21	3100	5670	0.2	1.4	PHQ943_2100 EZ705U	6600	6600	13200	210.0	210/1	3000	6000	35	3.0	1.0	1200	100
27	1830	3024	0.2	2.1	PHQ943_1680 EZ703U	6600	6600	13200	168.0	168/1	3000	6000	23	3.0	1.0	1204	94
27	2480	4536	0.3	1.5	PHQ943_1680 EZ705U	6600	6600	13200	168.0	168/1	3000	6000	35	3.0	1.0	1204	100
30	1634	2700	0.2	2.6	PHQ943_1500 EZ703U	6600	6600	13200	150.0	150/1	2700	5500	24	3.0	1.0	1202	94
30	2214	4050	0.3	1.9	PHQ943_1500 EZ705U	6600	6600	13200	150.0	150/1	2700	5500	36	3.0	1.0	1202	100
38	1307	2160	0.2	3.2	PHQ943_1200 EZ703U	6600	6600	13200	120.0	120/1	2500	4500	26	3.0	1.0	1203	94
38	1771	3240	0.3	2.4	PHQ943_1200 EZ705U	6600	6600	13200	120.0	120/1	2500	4500	38	3.0	1.0	1203	100
47	1045	1728	0.3	3.6	PHQ943_0960 EZ703U	5616	5616	13200	96.00	96/1	2500	4500	26	3.0	1.0	1207	94
47	1417	2592	0.4	2.7	PHQ943_0960 EZ705U	6600	6600	13200	96.00	96/1	2500	4500	39	3.0	1.0	1207	100
63	784	1296	0.3	4.8	PHQ943_0720 EZ703U	4212	4212	13200	72.00	72/1	2200	4500	28	3.0	1.0	1205	94
63	1063	1944	0.4	3.6	PHQ943_0720 EZ705U	6600	6600	13200	72.00	72/1	2200	4500	40	3.0	1.0	1205	100
PHQ9 (n_{1N} = 6000 min^{-1}, $M_{2acc,max}$ = 6600 Nm)																	
10	2808	4266	–	1.6	PHQ943_6000 EZ701U	6600	6600	13200	600.0	600/1	3000	6000	9.0	3.0	1.0	1145	90
10	3888	7722	0.1	1.2	PHQ943_6000 EZ702U	6600	6600	13200	600.0	600/1	3000	6000	14	3.0	1.0	1145	92
14	1966	2986	0.1	2.3	PHQ943_4200 EZ701U	6600	6600	13200	420.0	420/1	3000	6000	9.1	3.0	1.0	1184	90
14	2722	5405	0.1	1.7	PHQ943_4200 EZ702U	6600	6600	13200	420.0	420/1	3000	6000	14	3.0	1.0	1184	92
20	1404	2133	0.1	3.0	PHQ943_3000 EZ701U	5400	5400	13200	300.0	300/1	3000	6000	9.1	3.0	1.0	1196	90
20	1944	3861	0.1	2.2	PHQ943_3000 EZ702U	6600	6600	13200	300.0	300/1	3000	6000	14	3.0	1.0	1196	92
25	1123	1706	0.1	3.4	PHQ943_2400 EZ701U	4320	4320	13200	240.0	240/1	3000	6000	9.2	3.0	1.0	1198	90
25	1555	3089	0.1	2.4	PHQ943_2400 EZ702U	6600	6600	13200	240.0	240/1	3000	6000	14	3.0	1.0	1198	92
29	983	1493	0.1	4.3	PHQ943_2100 EZ701U	3780	3780	13200	210.0	210/1	3000	6000	9.7	3.0	1.0	1200	90

n_{2N} [rpm]	M_{2N} [Nm]	$M_{2,0}$ [Nm]	a_{th}	S	Type	M_{2acc} [Nm]	M_{2accHT} [Nm]	M_{2NOT} [Nm]	i	i_{exakt}	n_{1maxDB} [rpm]	n_{1maxZB} [rpm]	J_1 [kgcm²]	$\Delta\varphi_2$ [arcmin]	$\Delta\varphi_{2red}$ [arcmin]	C_2 [Nm/arcmin]	m [kg]
PHQ9 (n_{1N} = 6000 min^{-1}, $M_{2acc,max}$ = 6600 Nm)																	
29	1361	2703	0.1	3.1	PHQ943_2100 EZ702U	6600	6600	13200	210.0	210/1	3000	6000	15	3.0	1.0	1200	92
36	786	1194	0.1	4.8	PHQ943_1680 EZ701U	3024	3024	13200	168.0	168/1	3000	6000	9.9	3.0	1.0	1204	90
36	1089	2162	0.1	3.5	PHQ943_1680 EZ702U	6199	6199	13200	168.0	168/1	3000	6000	15	3.0	1.0	1204	92
PHQ10 (n_{1N} = 2000 min^{-1}, $M_{2acc,max}$ = 10000 Nm)																	
12	5895	6612	0.4	1.1	PHQ1043_1680 EZ813U	10000	–	20000	168.0	168/1	2800	4500	110	3.0	–	2064	156
13	5264	5904	0.5	1.2	PHQ1043_1500 EZ813U	10000	–	20000	150.0	150/1	2500	4000	115	3.0	–	2061	156
17	4211	4723	0.5	1.5	PHQ1043_1200 EZ813U	10000	–	20000	120.0	120/1	2000	3500	123	3.0	–	2062	156
17	6237	7426	0.8	1.0	PHQ1043_1200 EZ815U	10000	–	20000	120.0	120/1	2000	3500	186	3.0	–	2062	169
21	3369	3778	0.6	1.9	PHQ1043_0960 EZ813U	10000	–	20000	96.00	96/1	2000	3500	124	3.0	–	2068	156
21	4990	5941	0.9	1.3	PHQ1043_0960 EZ815U	10000	–	20000	96.00	96/1	2000	3500	187	3.0	–	2068	169
PHQ10 (n_{1N} = 4000 min^{-1}, $M_{2acc,max}$ = 10000 Nm)																	
17	5443	9439	0.2	1.2	PHQ1043_2400 EZ813U	10000	–	20000	240.0	240/1	2800	4500	107	3.0	–	2055	156
17	5640	14502	0.2	1.2	PHQ1043_2400 EZ815U	10000	–	20000	240.0	240/1	2800	4500	170	3.0	–	2055	169
19	4763	8259	0.3	1.4	PHQ1043_2100 EZ813U	10000	–	20000	210.0	210/1	2800	4500	110	3.0	–	2059	156
19	4935	12689	0.3	1.3	PHQ1043_2100 EZ815U	10000	–	20000	210.0	210/1	2800	4500	173	3.0	–	2059	169
24	3810	6607	0.3	1.7	PHQ1043_1680 EZ813U	10000	–	20000	168.0	168/1	2800	4500	110	3.0	–	2064	156
24	3948	10152	0.3	1.6	PHQ1043_1680 EZ815U	10000	–	20000	168.0	168/1	2800	4500	173	3.0	–	2064	169
27	3402	5900	0.3	1.9	PHQ1043_1500 EZ813U	10000	–	20000	150.0	150/1	2500	4000	115	3.0	–	2061	156
27	3525	9064	0.3	1.8	PHQ1043_1500 EZ815U	10000	–	20000	150.0	150/1	2500	4000	178	3.0	–	2061	169
PHQ11 (n_{1N} = 2000 min^{-1}, $M_{2acc,max}$ = 22000 Nm)																	
6.7	10527	11807	0.2	1.2	PHQ1143_3000 EZ813U	22000	–	40000	300.0	300/1	2800	4500	108	3.0	–	3490	266
8.3	8422	9446	0.2	1.5	PHQ1143_2400 EZ813U	22000	–	40000	240.0	240/1	2800	4500	108	3.0	–	3495	266
8.3	12474	14852	0.3	1.0	PHQ1143_2400 EZ815U	22000	–	40000	240.0	240/1	2800	4500	171	3.0	–	3495	278
9.5	7369	8265	0.2	1.8	PHQ1143_2100 EZ813U	22000	–	40000	210.0	210/1	2800	4500	111	3.0	–	3506	266
9.5	10915	12996	0.3	1.2	PHQ1143_2100 EZ815U	22000	–	40000	210.0	210/1	2800	4500	174	3.0	–	3506	278
12	5895	6612	0.2	2.2	PHQ1143_1680 EZ813U	21168	–	40000	168.0	168/1	2800	4500	112	3.0	–	3520	266
12	8732	10397	0.3	1.5	PHQ1143_1680 EZ815U	22000	–	40000	168.0	168/1	2800	4500	175	3.0	–	3520	278
13	5264	5904	0.2	2.5	PHQ1143_1500 EZ813U	18900	–	40000	150.0	150/1	2500	4000	118	3.0	–	3511	266
13	7796	9283	0.4	1.7	PHQ1143_1500 EZ815U	22000	–	40000	150.0	150/1	2500	4000	181	3.0	–	3511	278
17	4211	4723	0.3	3.1	PHQ1143_1200 EZ813U	15120	–	40000	120.0	120/1	2000	3500	127	3.0	–	3514	266
17	6237	7426	0.4	2.1	PHQ1143_1200 EZ815U	21600	–	40000	120.0	120/1	2000	3500	190	3.0	–	3514	278
21	3369	3778	0.3	3.9	PHQ1143_0960 EZ813U	12096	–	40000	96.00	96/1	2000	3500	130	3.0	–	3533	266
21	4990	5941	0.5	2.6	PHQ1143_0960 EZ815U	17280	–	40000	96.00	96/1	2000	3500	193	3.0	–	3533	278
PHQ11 (n_{1N} = 4000 min^{-1}, $M_{2acc,max}$ = 22000 Nm)																	
13	6804	11799	0.1	1.9	PHQ1143_3000 EZ813U	22000	–	40000	300.0	300/1	2800	4500	108	3.0	–	3490	266
13	7050	18128	0.1	1.8	PHQ1143_3000 EZ815U	22000	–	40000	300.0	300/1	2800	4500	171	3.0	–	3490	278
17	5443	9439	0.1	2.3	PHQ1143_2400 EZ813U	22000	–	40000	240.0	240/1	2800	4500	108	3.0	–	3495	266
17	5640	14502	0.1	2.2	PHQ1143_2400 EZ815U	22000	–	40000	240.0	240/1	2800	4500	171	3.0	–	3495	278
19	4763	8259	0.1	2.7	PHQ1143_2100 EZ813U	22000	–	40000	210.0	210/1	2800	4500	111	3.0	–	3506	266
19	4935	12689	0.1	2.6	PHQ1143_2100 EZ815U	22000	–	40000	210.0	210/1	2800	4500	174	3.0	–	3506	278
24	3810	6607	0.2	3.4	PHQ1143_1680 EZ813U	21168	–	40000	168.0	168/1	2800	4500	112	3.0	–	3520	266
24	3948	10152	0.2	3.3	PHQ1143_1680 EZ815U	22000	–	40000	168.0	168/1	2800	4500	175	3.0	–	3520	278
27	3402	5900	0.2	3.8	PHQ1143_1500 EZ813U	18900	–	40000	150.0	150/1	2500	4000	118	3.0	–	3511	266
27	3525	9064	0.2	3.7	PHQ1143_1500 EZ815U	22000	–	40000	150.0	150/1	2500	4000	181	3.0	–	3511	278

4.3 Dimensional drawings

In this chapter you can find the dimensions of the geared motors.

There is a dimensional drawing for every possible shaft/housing design, each with the tables for gearbox dimensions, motor dimensions and geared motor dimensions.

Dimensions can exceed the specifications of ISO 2768-mK due to casting tolerances or accumulation of individual tolerances.

We reserve the right to make dimensional changes due to ongoing technical development.

You can download 3D models of our standard drives at https://configurator.stoeber.de/en-US/.

Combination options and the dimensions of forced ventilated geared motors can also be found at https://configurator.stoeber.de/en-US/.

4.3.1 PHQ4 – PHQ10 F shaft design (flange shaft)

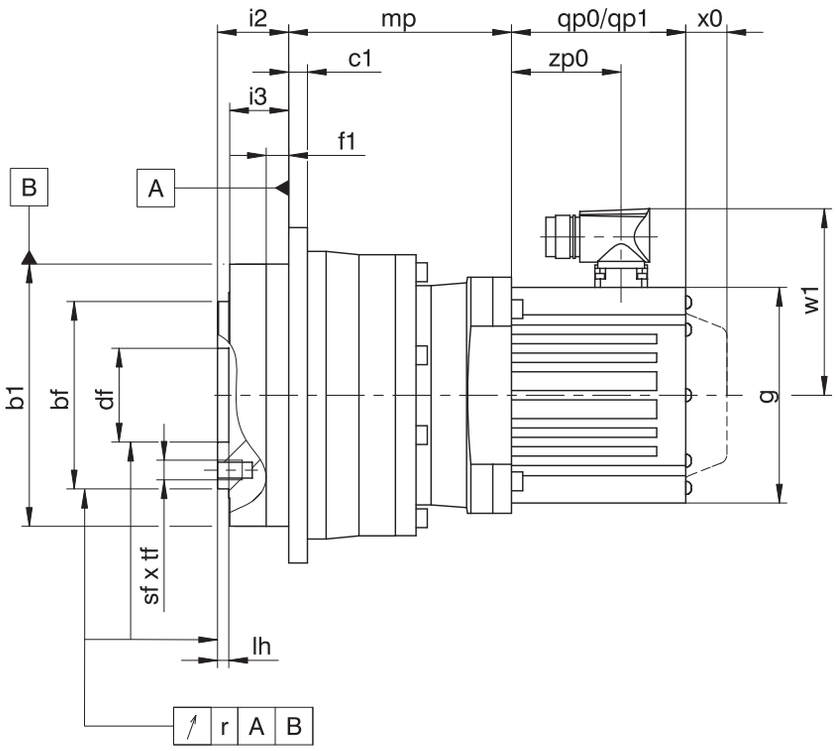

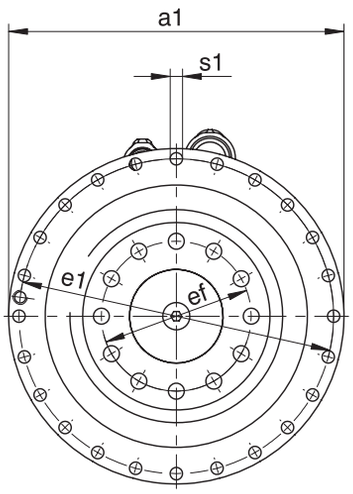

PHQ4/PHQ5

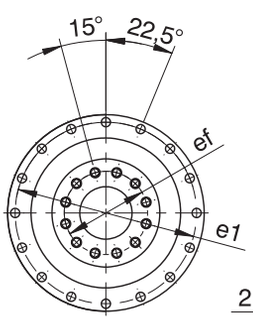

PHQ7/PHQ8

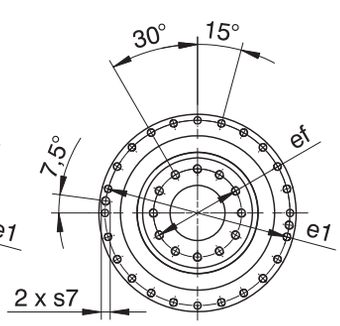

PHQ9

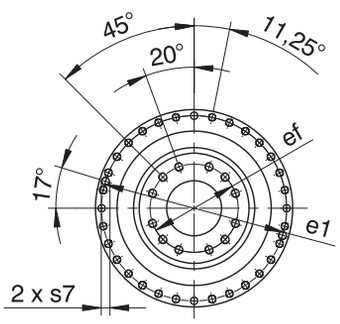

PHQ10

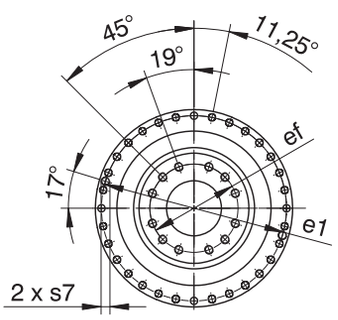

qp0	Applies to motors without brake.	qp1	Applies to motors with brake.
x0	Applies to encoders using an optical measuring method	w1	Different for the One Cable Solution (OCS), see the chapter [▶ 17.4]

Dimensions of gearboxes

Type	Øa1	Øb1	Øbf	c1	Ødf	Øe1	Øef	f1	i2	i3	lh	r	Øs1	s7	sf	tf
PHQ431	118	90_{h7}	63_{h7}	7	31.5^{H6}	109	50	10	30	24	6	0.020	5.5	–	M6	11.0
PHQ432	118	90_{h7}	63_{h7}	7	31.5^{H6}	109	50	10	30	24	6	0.020	5.5	–	M6	11.0
PHQ531	145	110_{h7}	80_{h7}	8	40.0^{H6}	135	63	12	29	23	6	0.020	5.5	–	M8	12.0
PHQ532	145	110_{h7}	80_{h7}	8	40.0^{H6}	135	63	12	29	23	6	0.020	5.5	–	M8	12.0
PHQ731	179	140_{h7}	100_{h7}	10	50.0^{H6}	168	80	12	38	32	6	0.025	6.6	–	M10	16.0
PHQ732	179	140_{h7}	100_{h7}	10	50.0^{H6}	168	80	12	38	32	6	0.025	6.6	–	M10	16.0
PHQ733	179	140_{h7}	100_{h7}	10	50.0^{H6}	168	80	12	38	32	6	0.025	6.6	–	M10	16.0
PHQ832	247	200_{h7}	160_{h7}	12	80.0^{H6}	233	125	15	50	42	8	0.030	9.0	M10	M12	17.0
PHQ833	247	200_{h7}	160_{h7}	12	80.0^{H6}	233	125	15	50	42	8	0.030	9.0	M10	M12	17.0
PHQ942	300	255_{h7}	180_{h7}	18	90.0^{H6}	280	145	20	66	55	12	0.030	13.5	M8	M20	28.0
PHQ943	300	255_{h7}	180_{h7}	18	90.0^{H6}	280	145	20	66	55	12	0.030	13.5	M8	M20	28.0
PHQ1043	330	285_{h7}	200_{h7}	20	95.0^{H6}	310	166	20	75	60	10	0.040	13.5	M10	M24	35.0

Dimensions of motors

Type	□g	qp0	qp1	w1	x0	zp0
EZ301U	72	90	130.0	55.5	21	54.5
EZ302U	72	112	152.0	55.5	21	76.5
EZ303U	72	134	174.0	55.5	21	98.5
EZ401U	98	98	146.5	91.0	22	56.0
EZ402U	98	123	171.5	91.0	22	81.0
EZ404U	98	173	221.5	91.0	22	131.0
EZ501U	115	93	147.5	100.0	22	58.5
EZ502U	115	118	172.5	100.0	22	83.5
EZ503U	115	143	197.5	100.0	22	108.5
EZ505U	115	193	247.5	100.0	22	158.5
EZ701U	145	102	161.0	115.0	22	64.0
EZ702U	145	127	186.0	115.0	22	89.0
EZ703U	145	152	211.0	115.0	22	114.0
EZ705U	145	207	266.0	134.0	22	165.0
EZ813U	190	238	315.0	156.5	22	184.0
EZ815U	190	320	397.0	156.5	22	266.0

Dimensions of geared motors

Type	EZ3	EZ4	EZ5	EZ7	EZ8
	mp	mp	mp	mp	mp
PHQ431	–	54.5	54.0	–	–
PHQ432	91.5	88.0	–	–	–
PHQ531	–	–	–	64.0	–
PHQ532	–	103.0	102.5	–	–
PHQ731	–	–	–	–	81.0
PHQ732	–	–	119.0	122.0	–
PHQ733	–	161.0	160.5	–	–
PHQ832	–	–	–	161.0	171.0
PHQ833	–	–	209.0	212.0	–
PHQ942	–	–	–	–	210.5
PHQ943	–	–	–	261.5	271.5
PHQ1043	–	–	–	–	324.5

4.3.2 PHQ11 F shaft design (flange shaft)

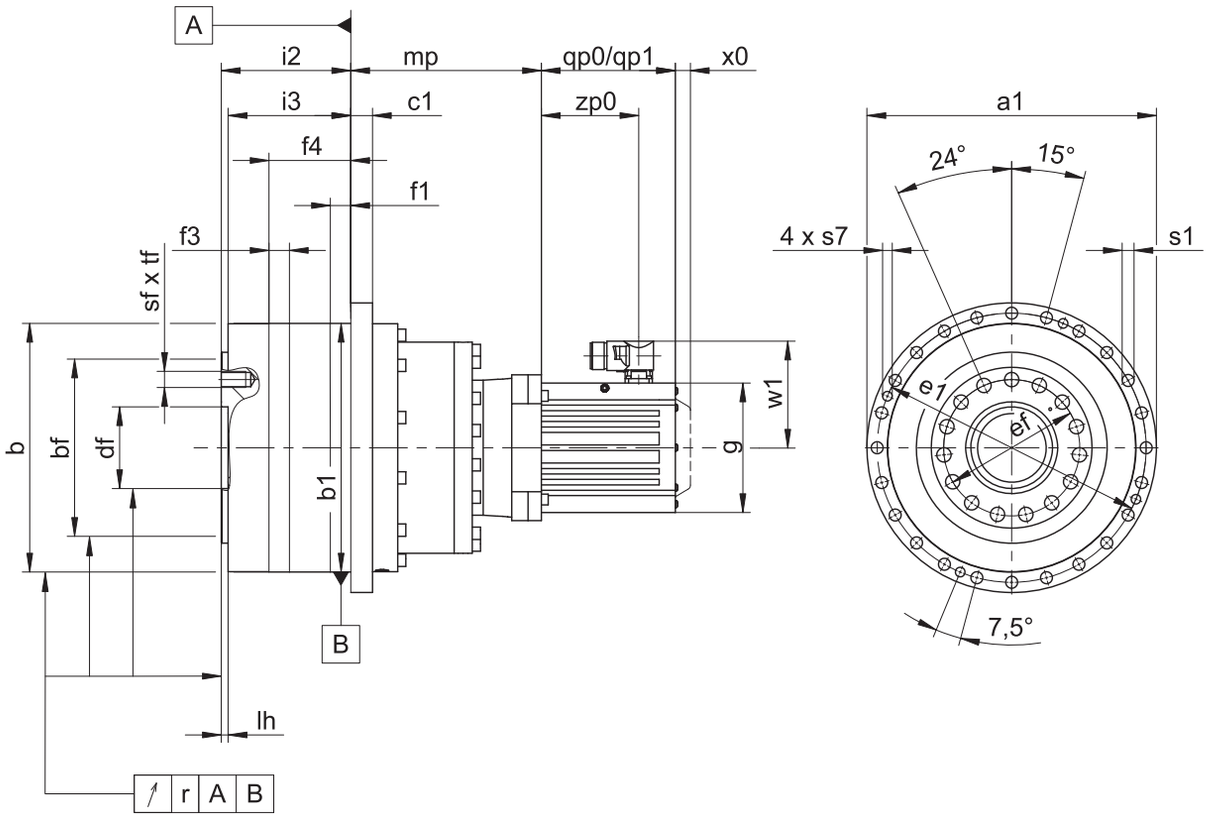

qp0	Applies to motors without brake.	qp1	Applies to motors with brake.
x0	Applies to encoders using an optical measuring method	w1	Different for the One Cable Solution (OCS), see the chapter [▶ 17.4]

Dimensions of gearboxes

Type	Øa1	Øb	Øb1	Øbf	c1	Ødf	Øe1	Øef	f1	f3	f4	i2	i3	lh	r	Øs1	s7	sf	tf
PHQ1143	425	365_{g6}	365_{h6}	260_{h7}	32	120.0^{H6}	395	200	30	30	120	190	180	10	0.040	17.5	M16	M24	35.5

Dimensions of motors

Type	□g	qp0	qp1	w1	x0	zp0
EZ813U	190	238	315	156.5	22	184
EZ815U	190	320	397	156.5	22	266

Dimensions of geared motors

Type	EZ8
	mp
PHQ1143	280

4.4 Type designation

This chapter shows you an explanation of the type designation with the associated options.

Additional ordering information not included in the type designation can be found at the end of the chapter.

Example code

PHQ	7	3	3	S	F	S	S	0880	EZ401U

Explanation

Code	Designation	Design
PHQ	Type	Planetary gearbox
7	Size	7 (example)
3	Generation	Generation 3
4		Generation 4
1	Stages	Single-stage
2		Two-stage
3		Three-stage
S	Housing	Standard
F	Shaft	Flange shaft
S	Bearing	Standard bearing
V		Reinforced bearing (PHQ4 – PHQ5)
S	Backlash	Standard
R		Reduced (PHQ4 – PHQ9)
0880	Transmission ratio (i x 10)	i = 88 (example)
EZ401U	Motor	EZ synchronous servo motor

To complete the type designation, also specify the following in your order:

- For a detailed type designation of the motor, see the chapter [▶ 17.5]
- Mounting position (for three-stage gearboxes), see the chapter [▶ 4.5.3]
- Radial shaft seal rings at the output made of NBR or FKM (option), see the chapter [▶ 4.6.3]
- Reverse operation of the output shaft from ±20° to ±90° and horizontal installation, see the chapter [▶ 4.6.4]

To make selecting your geared motor easy, use our STOBER Configurator at https://configurator.stoeber.de/en-US/.

You can find a detailed description of the nameplate in the chapter [▶ 17.5.1].

4.5 Product description

4.5.1 Input options

EZ synchronous servo motor



Catalog ID 442437_en

MB motor adapter + EZ synchronous servo motor



Catalog ID 443311_en

The corresponding catalogs can be found at http://www.stoeber.de/en/downloads/

Enter the ID of the catalog in the Search term field.

4.5.2 Installation conditions

The torque and force values listed in this catalog are valid under the following conditions:

- When the flange shaft and gear housing are fastened on the machine side using screws of strength class 12.9
- When the gear housings are adjusted at pilot øb1, and also at pilot Øb for size PHQ11. The machine-side fit must be H7.
- When the flange shaft is adjusted using the connecting element at pilot øbf or ødf

4.5.3 Mounting positions

The following table shows the standard mounting positions.

Please indicate the mounting position when ordering three-stage geared motors.

EL1	EL5	EL6
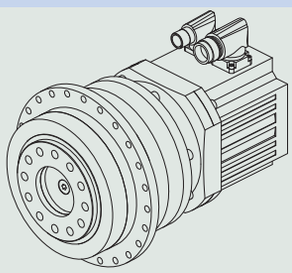	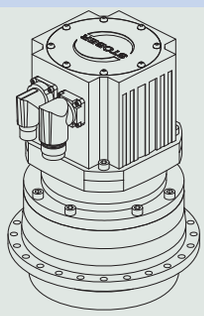	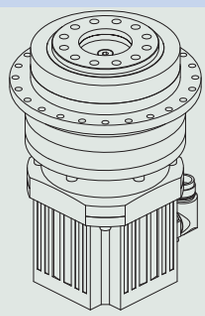
Horizontal output	Vertical downward output	Vertical upward output

4.5.4 Lubricants

STOBER fills the gearboxes with the amount and type of lubricant specified on the nameplate. The filling volume and the structure of the gearboxes depend on the mounting position.

Only install the gearboxes in the intended mounting position! Reposition the gearboxes only after consulting STOBER. Otherwise, STOBER assumes no liability for the gearboxes.

You will receive lubricants for use in the food industry upon request.

4.5.5 Other product features

Feature	Value
Max. permitted gearbox temperature (on the surface of the gearbox)	≤ 90 °C
Paint	Black RAL 9005
Explosion-proof design in accordance with (ATEX) Directive 2014/34/EU (optional)	Not available
Efficiency:	
η_{get} single-stage	96%
η_{get} two-stage	93%
η_{get} three-stage	90%
Protection class:[1]	
Gearbox	IP65
Motor	IP56, optionally IP66

[1] Observe the protection class of all the components.

4.5.6 Direction of rotation

The input and output rotate in the same direction.

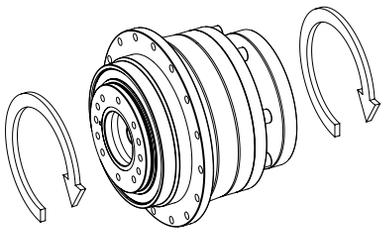

4.6 Project configuration

Project your drives using our SERVOsoft designing software. Download SERVOsoft free of charge after registration at https://www.stoeber.de/en/services/info-servosoft/.

It is the most convenient and reliable method of drive selection, as the entire torque/speed curve of the application is displayed and evaluated here in the curve of the geared motor.

In this chapter, only limit values for specific operating points can be taken into consideration for manual drive selection.

An explanation of the formula symbols can be found in Chapter [▷ 20.1].

The formula symbols for values actually present in the application are marked with *.

4.6.1 Drive selection

Drive selection for gearboxes

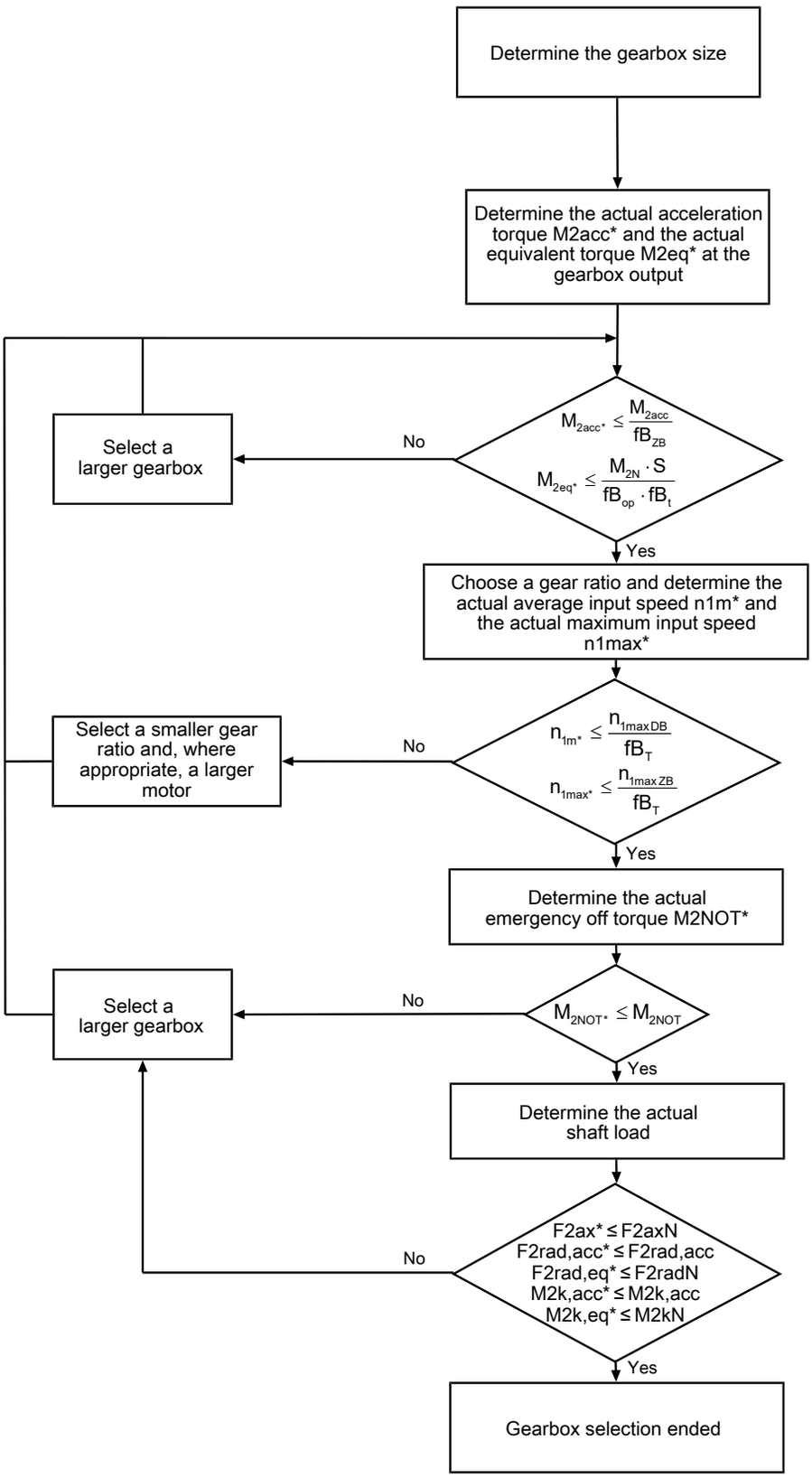

Calculate the forces and tilting torques in the chapter Permitted shaft loads.

Refer to the selection tables for the values for i, n_{1maxDB}, n_{1maxZB}, M_{2acc} (M_{2accHT} for reduced backlash), M_{2NOT}, M_{2N} and S.

The values for fB_T, fB_{op}, fB_t and fB_{ZB} can be found in the corresponding tables in this chapter.

Drive selection for motors

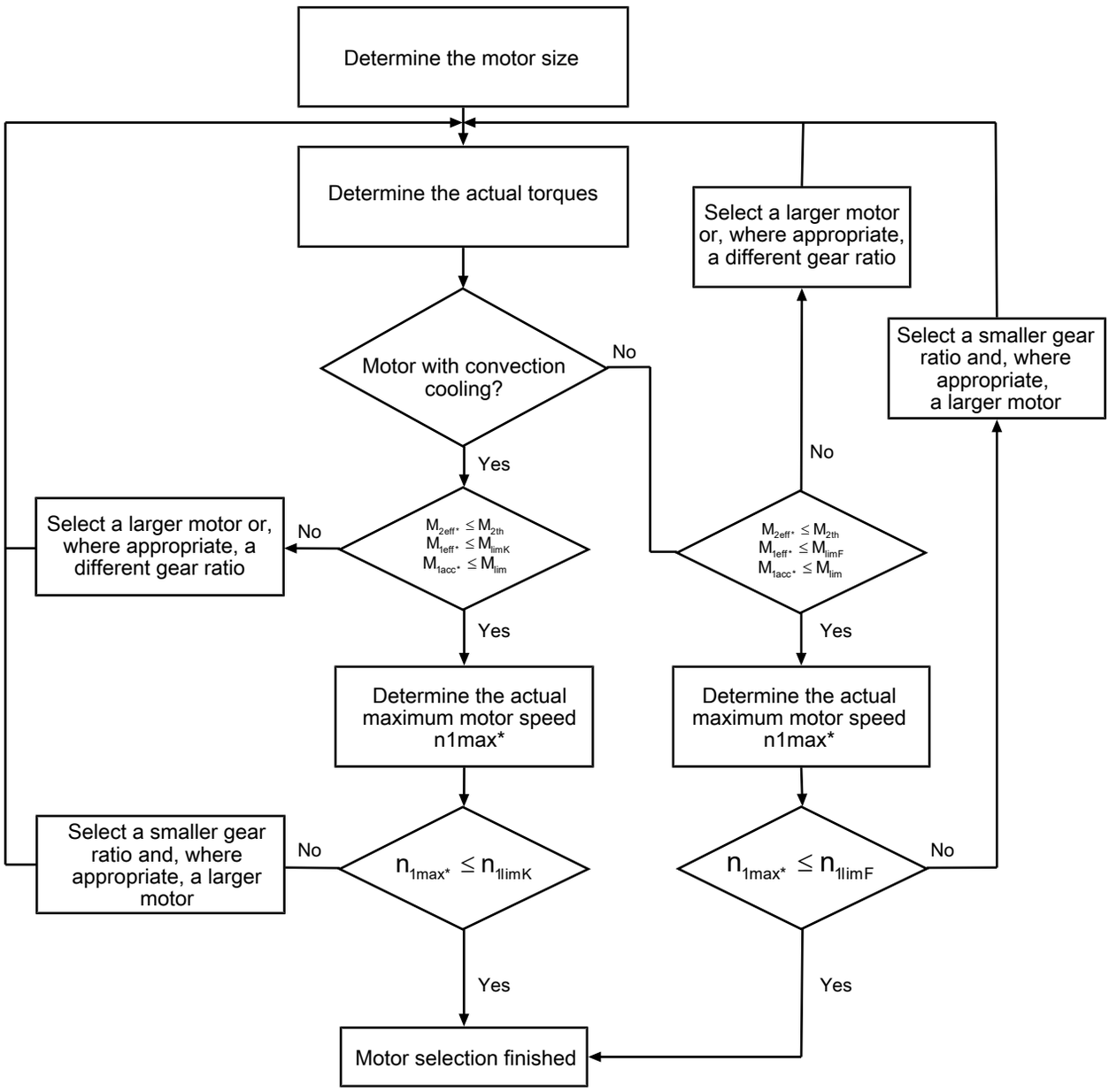

The value for M_{lim}, M_{limK}, M_{limF}, n_{1limK} and n_{1limF} can be found in the motor characteristic curve in the chapter [▷ 17.3]. Note the size, nominal speed n_N and cooling type of the motor.

Example of cyclic operation

The following calculations are based on a representation of the power taken from the output based in accordance with the following example:

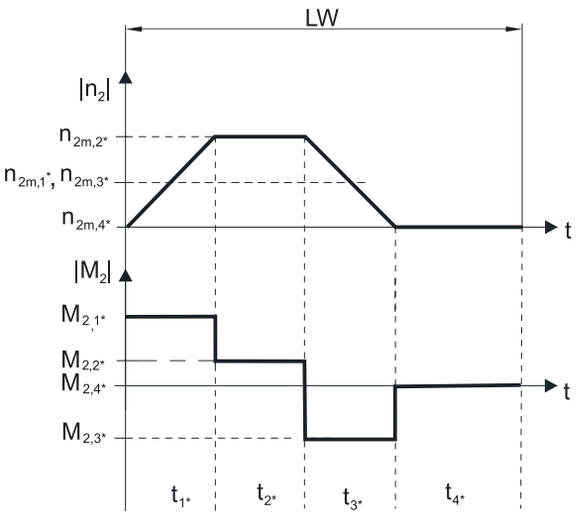

Calculation of the actual maximum acceleration torques

$$M_{2acc*} = J_{tot} \cdot \frac{\Delta n_2}{9{,}55 \cdot \Delta t} + M_{L*}$$

$$M_{1acc*} = \frac{M_{2acc*}}{i \cdot \eta_{get}} + J_1 \cdot \frac{\Delta n_1}{9{,}55 \cdot \Delta t}$$

Calculation of the actual average input speed

$$n_{1m*} = n_{2m*} \cdot i$$

$$n_{2m*} = \frac{\left|n_{2m,1*}\right| \cdot t_{1*} + \ldots + \left|n_{2m,n*}\right| \cdot t_{n*}}{t_{1*} + \ldots + t_{n*}}$$

If $t_{1*} + \ldots + t_{3*} \geq 6$ min, calculate n_{2m*} without the rest phase t_{4*}.

The values for the ratio i can be found in the selection tables.

Calculation of the actual effective torque

$$M_{2eff*} = \sqrt{\frac{t_{1*} \cdot M_{2,1*}{}^2 + \ldots + t_{n*} \cdot M_{2,n*}{}^2}{t_{1*} + \ldots + t_{n*}}}$$

Calculation of the actual emergency off torque

$$M_{2NOT*} = J_{tot} \cdot \frac{\Delta n_2}{9.55 \cdot \Delta t} + M_{L*}$$

Calculation of the actual equivalent torque

$$M_{2eq*} = \sqrt[3]{\frac{\left|n_{2m,1*}\right| \cdot t_{1*} \cdot \left|M_{2,1*}{}^3\right| + \ldots + \left|n_{2m,n*}\right| \cdot t_{n*} \cdot \left|M_{2,n*}{}^3\right|}{\left|n_{2m,1*}\right| \cdot t_{1*} + \ldots + \left|n_{2m,n*}\right| \cdot t_{n*}}}$$

Calculation of the thermal limit torque

Calculate the thermal limit torque M_{2th} for a duty cycle $ED_{10} > 50\%$ and the actual average input speed n_{1m*}. (At $K_{mot,th} \leq 0$ you must reduce the average input speed n_{1m*} accordingly or select another geared motor size.)

$$M_{2th} = M_{op} \cdot i \cdot K_{mot,th}$$

$$K_{mot,th} = 0{,}93 - \frac{a_{th}}{1000} \cdot fB_T \cdot \left(\frac{n_{1m*}}{1000}\right)^3$$

Refer to the selection tables for the values of i and a_{th}.

The values for fB_T can be found in the corresponding table in this chapter.

The value for the torque of the motor at operating point M_{op} with the determined average input speed n_{1m*} can be found in the motor characteristic curve in the chapter [▶ 17.3]. Note the size, nominal speed n_N and cooling type of the motor. The figure below shows an example of reading the torque M_{op} of a motor with convection cooling at the operating point.

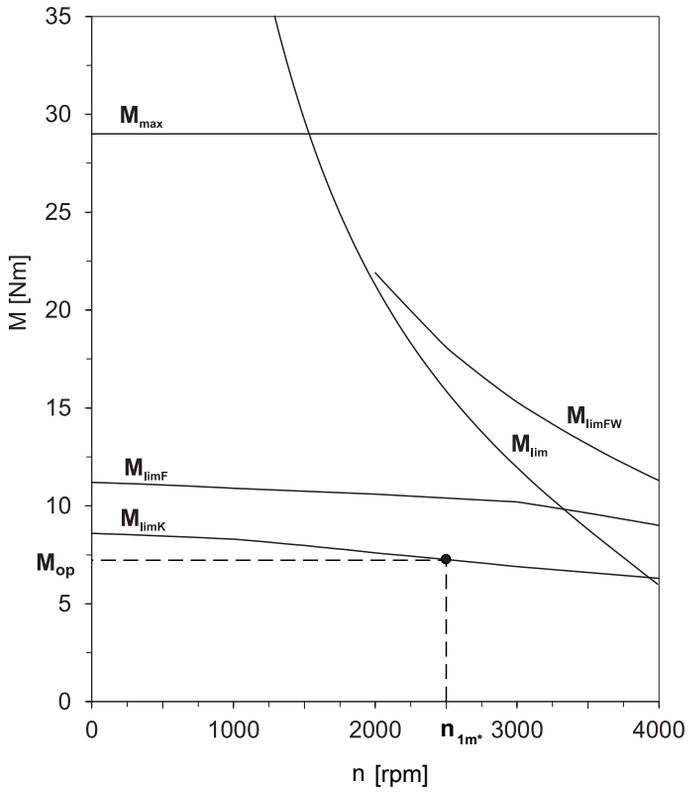

Operating factors

Operating mode	fB_{op}
Uniform continuous operation	1.00
Cyclic operation	1.00
Reversing load cyclic operation	1.00

Run time	fB_t
Daily runtime ≤ 8 h	1.00
Daily runtime ≤ 16 h	1.15
Daily runtime ≤ 24 h	1.20

Cyclic operation	fB_{ZB}
≤ 1000 load changes/hour (LW/h)	1.00
> 1000 load changes/hour (LW/h)	1.15

Temperature		fB_T
Motor cooling	**Surrounding temperature**	
Motor with forced ventilation	≤ 20 °C	0.9
	≤ 30 °C	1.0
	≤ 40 °C	1.15
Motor with convection cooling	≤ 20 °C	1.0
	≤ 30 °C	1.1
	≤ 40 °C	1.25

Notes

- The maximum permitted gearbox temperature (see the "Other product features" chapter) must not be exceeded. Doing so may result in damage to the geared motor.
- For braking from full speed (for example when the power fails or when setting up the machine), note the permitted gearbox torques (M_{2acc}, M_{2NOT}) in the selection tables.

4.6.2 Permitted shaft loads for the output shaft

The values specified in the tables apply to the permitted shaft loads:

- For shaft dimensions in accordance with the catalog
- For output speeds $n_{2m*} \leq 100$ rpm ($F^{2axN} = F_{2ax100}$; $F_{2radN} = F_{2rad100}$; $M_{2kN} = M_{2k100}$)
- Only if radial forces on the gearbox are stabilized by its pilots (housing, flange shaft)

Permitted shaft loads for standard bearing S

Type	z_2 [mm]	F_{2ax100} [N]	$F_{2rad100}$ [N]	$F_{2rad,acc}$ [N]	M_{2k100} [Nm]	$M_{2k,acc}$ [Nm]	C_{2k} [Nm/ arcmin]
PHQ4	83.0	2150	3095	3929	257	326	192
PHQ5	97.0	4150	4536	4897	440	475	429
PHQ7	86.0	6150	17045	17045	1466	1466	500
PHQ8	125.5	10050	27778	33333	3486	4183	1550
PHQ9	155.0	33000	48387	70968	7500	11000	7500
PHQ10	171.0	50000	51462	73099	8800	12500	9500
PHQ11	231.0	60000	47619	69264	11000	16000	11500
PHQ12	281.0	70000	64057	106761	18000	30000	14000

Permitted shaft loads for reinforced bearing V

Type	z_2 [mm]	F_{2ax100} [N]	$F_{2rad100}$ [N]	$F_{2rad,acc}$ [N]	M_{2k100} [Nm]	$M_{2k,acc}$ [Nm]	C_{2k} [Nm/ arcmin]
PHQ4	88.5	2900	4000	4000	354	354	217
PHQ5	104.0	5000	5500	5500	572	572	478

For other output speeds, download diagrams at https://configurator.stoeber.de/en-US/.

The following applies to output speeds $n_{2m*} > 100$ rpm:

$$F_{2axN} = \frac{F_{2ax100}}{\sqrt[3]{\frac{n_{2m*}}{100\ \text{rpm}}}} \qquad F_{2radN} = \frac{F_{2rad100}}{\sqrt[3]{\frac{n_{2m*}}{100\ \text{rpm}}}} \qquad M_{2kN} = \frac{M_{2k100}}{\sqrt[3]{\frac{n_{2m*}}{100\ \text{rpm}}}}$$

The values for F_{2ax100}, $F_{2rad100}$ and M_{2k100} can be found in the table "Permitted shaft loads" in this chapter.

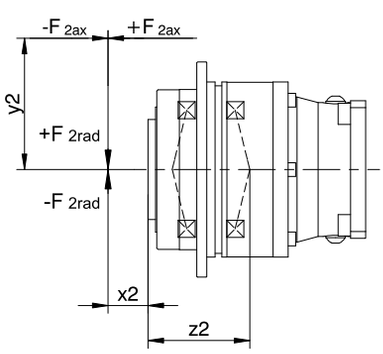

Fig. 1: Force application points

You can determine the permitted radial forces from the permitted tilting torque M_{2kN} and $M_{2k,acc}$. The actual radial forces may not exceed the permitted radial forces. The permitted radial forces pertain to the shaft end (x2 = 0).

$$M_{2k,acc*} = \frac{2 \cdot F_{2ax*} \cdot y_2 + F_{2rad,acc*} \cdot (x_2 + z_2)}{1000}$$

For applications with multiple axial and/or radial forces, you must add the forces as vectors.

In the event of EMERGENCY OFF operation (max. 1000 load changes), you can multiply the permitted forces and torques for F_{2ax100}, $F_{2rad100}$ and M_{2k100} by a factor of two.

Also note the calculation for equivalent values:

$$M_{2k,eq^*} = \sqrt[3]{\frac{\left|n_{2m,1^*}\right| \cdot t_{1^*} \cdot \left|M_{2k,acc,1^*}{}^3\right| + \ldots + \left|n_{2m,n^*}\right| \cdot t_{n^*} \cdot \left|M_{2k,acc,n^*}{}^3\right|}{\left|n_{2m,1^*}\right| \cdot t_{1^*} + \ldots + \left|n_{2m,n^*}\right| \cdot t_{n^*}}}$$

$$F_{2rad,eq^*} = \sqrt[3]{\frac{\left|n_{2m,1^*}\right| \cdot t_{1^*} \cdot \left|F_{2rad,acc,1^*}{}^3\right| + \ldots + \left|n_{2m,n^*}\right| \cdot t_{n^*} \cdot \left|F_{2rad,acc,n^*}{}^3\right|}{\left|n_{2m,1^*}\right| \cdot t_{1^*} + \ldots + \left|n_{2m,n^*}\right| \cdot t_{n^*}}}$$

The following apply to the bearing service life L_{10h} ($ED_{10} \leq 40\%$):

$L_{10h} > 10000$ h with $1 < M_{2kN}/M_{2k^*} < 1.25$

$L_{10h} > 20000$ h with $1.25 < M_{2kN}/M_{2k^*} < 1.5$

$L_{10h} > 30000$ h with $1.5 < M_{2kN}/M_{2k^*}$

For different duty cycles:

$$L_{10h} > L_{10h(ED_{10}=40\%)} \cdot \frac{40\%}{ED_{10}}$$

4.6.3 Recommendation for radial shaft seal rings

For a duty cycle > 60% and higher surrounding temperatures, we recommend radial shaft seal rings made of FKM at the output.

Properties:

- Excellent temperature resistance
- High chemical stability
- Very good resistance to aging
- Excellent resistance in oils and greases
- For use in the food, beverage and pharmaceutical industries

Leak-proofness

Our gearboxes are equipped with high-quality radial shaft seal rings and checked for leaks. However, a leak cannot be fully ruled out over the length of use of a gearbox. If you use a gearbox with goods incompatible with the lubricant, you must take measures to prevent direct contact with the gearbox lubricant in case of a leak.

4.6.4 Reverse operation

To ensure lubrication for circulating gearing parts during cyclic reverse operation from ± 20° to ± 90° at the output, pay careful attention to the position of the output shaft for the horizontal mounting of the gearbox, as shown in the diagrams below.

The images show the center position of reverse operation.

Cyclic reverse operation ≤ ± 20° on request.

PHQ4 – PHQ12

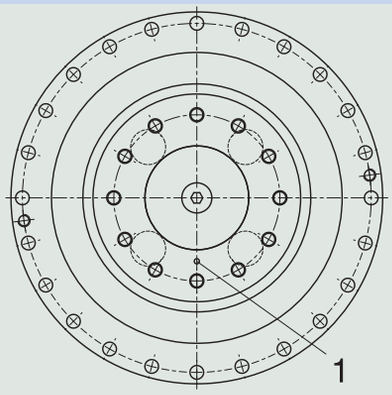

1 Position of the mark: bottom

Please note that the hole pattern may be different, depending on the size of the planetary gearbox.

4.7 Additional documentation

Additional documentation related to the product can be found at
http://www.stoeber.de/en/downloads/

Enter the ID of the documentation in the Search term field.

Documentation	ID
Operating manual gearboxes, geared motors PHQ43 – PHQ83, PHQ94 – PHQ124	443353_en
Operating manual for EZ synchronous servo motors	443032_en

5 PHV planetary geared motors

Table of contents

5.1 Overview 96

5.2 Selection tables 97

5.3 Dimensional drawings 98

5.3.1 F shaft design (flange shaft) 98

5.4 Type designation 100

5.5 Product description 100

5.5.1 Input options 100

5.5.2 Installation conditions 100

5.5.3 Lubricants 101

5.5.4 Other product features 101

5.5.5 Direction of rotation 101

5.6 Project configuration 101

5.6.1 Drive selection 102

5.6.2 Permitted shaft loads for the output shaft 106

5.6.3 Recommendation for radial shaft seal rings 107

5.6.4 Reverse operation 107

5.7 Additional documentation 107



5 Planetary geared motors PHV

5.1 Overview

High-performance precision planetary geared motors

Features

Power density	★★★★☆
Backlash	★★★★☆
Price category	€€€
Shaft load	★★★★★
Smooth operation	★★★★☆
Torsional stiffness	★★★★☆
Mass moment of inertia	★★★★★
Helical gearing	✓
Maintenance-free	✓
Any mounting position	✓
Continuous operation without cooling	✓
Stiff output bearings due to pretension	✓
Compact and highly dynamic due to direct motor attachment	✓

Key ★☆☆☆☆ good | ★★★★★ excellent
€ Economy | €€€€€ Premium

Technical data

i	61 – 121
M_{2acc}	1638 – 7500 Nm
$\Delta\phi_2$	1 – 3 arcmin
η_{get}	90 %

5.2 Selection tables

The technical data specified in the selection tables applies to:

- Installation altitudes up to 1000 m above sea level
- Surrounding temperatures from 0 °C to 40 °C
- Drives with convection-cooled motors (e.g. EZ401**U**)

For the technical data on drives with forced ventilated motors (e.g. EZ401**B**), refer to https://configurator.stoeber.de/en-US/.

An explanation of the formula symbols can be found in Chapter [▷ 20.1].

n_{2N} [rpm]	M_{2N} [Nm]	$M_{2,0}$ [Nm]	a_{th}	S	Type	M_{2acc} [Nm]	M_{2accHT} [Nm]	M_{2NOT} [Nm]	i	i_{exakt}	n_{1maxDB} [rpm]	n_{1maxZB} [rpm]	J_1 [kgcm²]	$\Delta\varphi_2$ [arcmin]	$\Delta\varphi_{2red}$ [arcmin]	C_2 [Nm/ arcmin]	m [kg]
PHV9 (n_{1N} = 3000 min^{-1}, $M_{2acc,max}$ = 4250 Nm)																	
25	806	904	0.2	3.1	PHV943_1210 EZ701U	2178	2178	9000	121.0	121/1	2500	4500	9.8	3.0	1.0	805	67
25	1307	1568	0.4	1.9	PHV943_1210 EZ702U	4250	4250	9000	121.0	121/1	2500	4500	15	3.0	1.0	805	70
25	1797	2265	0.5	1.4	PHV943_1210 EZ703U	4250	4250	9000	121.0	121/1	2500	4500	23	3.0	1.0	805	72
25	2320	3289	0.7	1.1	PHV943_1210 EZ705U	4250	4250	9000	121.0	121/1	2500	4500	35	3.0	1.0	805	77
33	606	680	0.3	4.1	PHV943_0910 EZ701U	1638	1638	9000	91.00	91/1	2500	4500	11	3.0	1.0	838	67
33	983	1179	0.4	2.5	PHV943_0910 EZ702U	3358	3358	9000	91.00	91/1	2500	4500	16	3.0	1.0	838	70
33	1351	1704	0.6	1.9	PHV943_0910 EZ703U	4250	4250	9000	91.00	91/1	2500	4500	24	3.0	1.0	838	72
33	1744	2473	0.8	1.4	PHV943_0910 EZ705U	4250	4250	9000	91.00	91/1	2500	4500	36	3.0	1.0	838	77
49	659	791	0.5	3.8	PHV943_0610 EZ702U	2251	2251	9000	61.00	61/1	2500	4500	19	3.0	1.0	850	70
49	906	1142	0.7	2.8	PHV943_0610 EZ703U	3569	3569	9000	61.00	61/1	2500	4500	27	3.0	1.0	850	72
49	1169	1658	1.0	2.1	PHV943_0610 EZ705U	4250	4250	9000	61.00	61/1	2500	4500	40	3.0	1.0	850	77
PHV9 (n_{1N} = 4500 min^{-1}, $M_{2acc,max}$ = 4250 Nm)																	
37	1318	2178	0.4	1.7	PHV943_1210 EZ703U	4250	4250	9000	121.0	121/1	2500	4500	23	3.0	1.0	805	72
37	1786	3267	0.6	1.3	PHV943_1210 EZ705U	4250	4250	9000	121.0	121/1	2500	4500	35	3.0	1.0	805	77
49	991	1638	0.5	2.3	PHV943_0910 EZ703U	4250	4250	9000	91.00	91/1	2500	4500	24	3.0	1.0	838	72
49	1343	2457	0.7	1.7	PHV943_0910 EZ705U	4250	4250	9000	91.00	91/1	2500	4500	36	3.0	1.0	838	77
74	664	1098	0.6	3.4	PHV943_0610 EZ703U	3569	3569	9000	61.00	61/1	2500	4500	27	3.0	1.0	850	72
74	900	1647	0.8	2.5	PHV943_0610 EZ705U	4250	4250	9000	61.00	61/1	2500	4500	40	3.0	1.0	850	77
PHV10 (n_{1N} = 2000 min^{-1}, $M_{2acc,max}$ = 7500 Nm)																	
22	3193	3581	1.0	1.3	PHV1043_0910 EZ813U	7500	–	15000	91.00	91/1	2500	4500	108	3.0	–	1342	118
33	2141	2401	1.2	1.9	PHV1043_0610 EZ813U	7500	–	15000	61.00	61/1	2500	4500	111	3.0	–	1370	118
33	3170	3775	1.7	1.3	PHV1043_0610 EZ815U	7500	–	15000	61.00	61/1	2500	4500	174	3.0	–	1370	131
PHV10 (n_{1N} = 4000 min^{-1}, $M_{2acc,max}$ = 7500 Nm)																	
44	2064	3579	0.6	1.9	PHV1043_0910 EZ813U	7500	–	15000	91.00	91/1	2500	4500	108	3.0	–	1342	118
44	2138	5499	0.7	1.9	PHV1043_0910 EZ815U	7500	–	15000	91.00	91/1	2500	4500	171	3.0	–	1342	131
66	1383	2399	0.8	2.9	PHV1043_0610 EZ813U	7500	–	15000	61.00	61/1	2500	4500	111	3.0	–	1370	118
66	1433	3686	0.8	2.8	PHV1043_0610 EZ815U	7500	–	15000	61.00	61/1	2500	4500	174	3.0	–	1370	131

5.3 Dimensional drawings

In this chapter you can find the dimensions of the geared motors.

There is a dimensional drawing for every possible shaft/housing design, each with the tables for gearbox dimensions, motor dimensions and geared motor dimensions.

Dimensions can exceed the specifications of ISO 2768-mK due to casting tolerances or accumulation of individual tolerances.

We reserve the right to make dimensional changes due to ongoing technical development.

You can download 3D models of our standard drives at https://configurator.stoeber.de/en-US/.

Combination options and the dimensions of forced ventilated geared motors can also be found at https://configurator.stoeber.de/en-US/.

5.3.1 F shaft design (flange shaft)

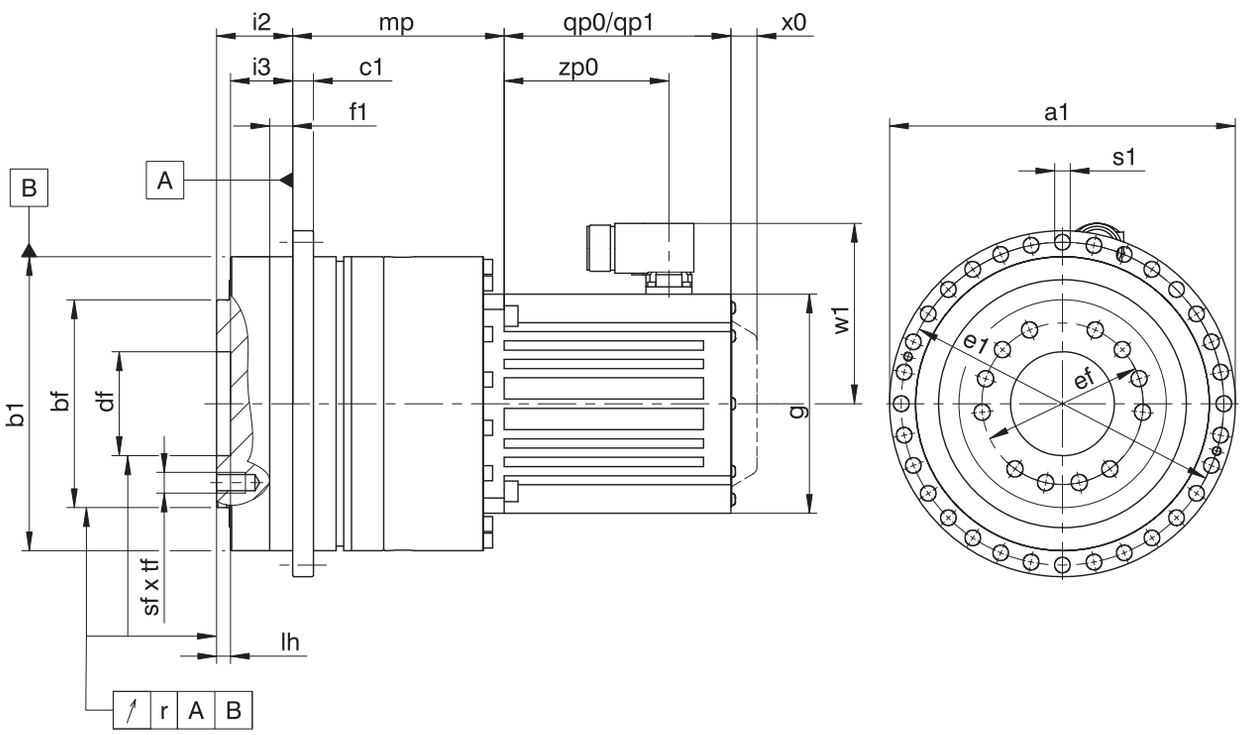

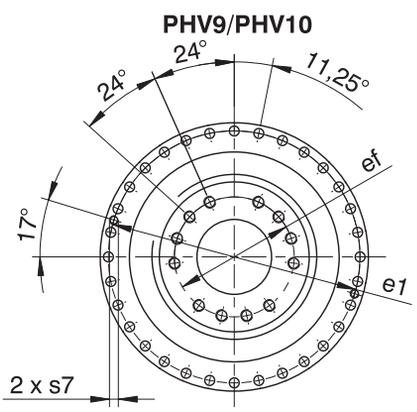

qp0	Applies to motors without brake.	qp1	Applies to motors with brake.
x0	Applies to encoders using an optical measuring method.	w1	Different for the One Cable Solution (OCS), see the chapter [▶ 17.4]

Dimensions of gearboxes

Type	Øa1	Øb1	Øbf	c1	Ødf	Øe1	Øef	f1	i2	i3	lh	r	Øs1	s7	sf	tf
PHV943	300	255_{h7}	180_{h7}	18	90^{H6}	280	140	20	66	55	12	0.030	13.5	M8	M16	24
PHV1043	330	285_{h7}	200_{h7}	20	95^{H6}	310	160	20	75	60	10	0.040	13.5	M10	M20	28

Dimensions of motors

Type	□g	qp0	qp1	w1	x0	zp0
EZ701U	145	102	161	115.0	22	64
EZ702U	145	127	186	115.0	22	89
EZ703U	145	152	211	115.0	22	114
EZ705U	145	207	266	134.0	22	165
EZ813U	190	238	315	156.5	22	184
EZ815U	190	320	397	156.5	22	266

Dimensions of geared motors

Type	EZ7	EZ8
	mp	mp
PHV943	174	–
PHV1043	–	208

5.4 Type designation

This chapter shows you an explanation of the type designation with the associated options.

Additional ordering information not included in the type designation can be found at the end of the chapter.

Example code

PHV	9	4	3	S	F	S	S	0910	EZ703U

Explanation

Code	Designation	Design
PHV	Type	Planetary gearbox
9	Size	9 (example)
4	Generation	Generation 4
3	Stages	Three-stage
S	Housing	Standard
F	Shaft	Flange shaft
S	Bearing	Standard bearing
S	Backlash	Standard
R		Reduced (PHV9)
0910	Transmission ratio (i x 10)	i = 91 (example)
EZ703U	Motor	EZ synchronous servo motor

To complete the type designation, also specify the following in your order:

- A detailed type designation of the motor, see the chapter [▶ 17.5]
- Radial shaft seal rings at the output made of NBR or FKM (option), see the chapter [▶ 5.6.3]
- Reverse operation of the output shaft from ±20° to ±90° and horizontal installation, see the chapter [▶ 5.6.4]

To make selecting your geared motor easy, use our STOBER Configurator at https://configurator.stoeber.de/en-US/.

You can find a detailed description of the nameplate in the chapter [▶ 17.5.1].

5.5 Product description

5.5.1 Input options

EZ synchronous servo motor



Catalog ID 442437_en

The corresponding catalogs can be found at http://www.stoeber.de/en/downloads/

Enter the ID of the catalog in the Search term field.

5.5.2 Installation conditions

The torque and force values listed in this catalog are valid under the following conditions:

- When the flange shaft and gear housing are fastened on the machine side using screws of strength class 12.9
- When the gear housings are adjusted at pilot øb1. The machine-side fit must be H7.
- When the flange shaft is adjusted using the connecting element at pilot øbf or ødf

5.5.3 Lubricants

STOBER fills the gearboxes with the amount and type of lubricant specified on the nameplate.

You will receive lubricants for use in the food industry upon request.

5.5.4 Other product features

Feature	Value
Max. permitted gearbox temperature (on the surface of the gearbox)	≤ 90 °C
Paint	Black RAL 9005
Explosion-proof design in accordance with (ATEX) Directive 2014/34/EU (optional)	Not available
Efficiency:	
η_{get} three-stage	90%
Protection class:[1]	
Gearbox	IP65
Motor	IP56, optionally IP66

5.5.5 Direction of rotation

The input and output rotate in the same direction.

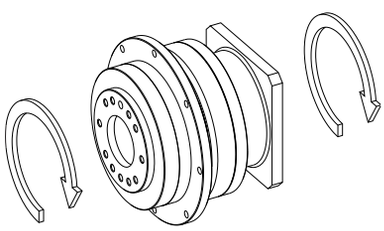

5.6 Project configuration

Project your drives using our SERVOsoft designing software. Download SERVOsoft free of charge after registration at https://www.stoeber.de/en/services/info-servosoft/.

It is the most convenient and reliable method of drive selection, as the entire torque/speed curve of the application is displayed and evaluated here in the curve of the geared motor.

In this chapter, only limit values for specific operating points can be taken into consideration for manual drive selection.

An explanation of the formula symbols can be found in Chapter [▷ 20.1].

The formula symbols for values actually present in the application are marked with *.

[1] Observe the protection class of all the components.

5.6.1 Drive selection

Drive selection for gearboxes

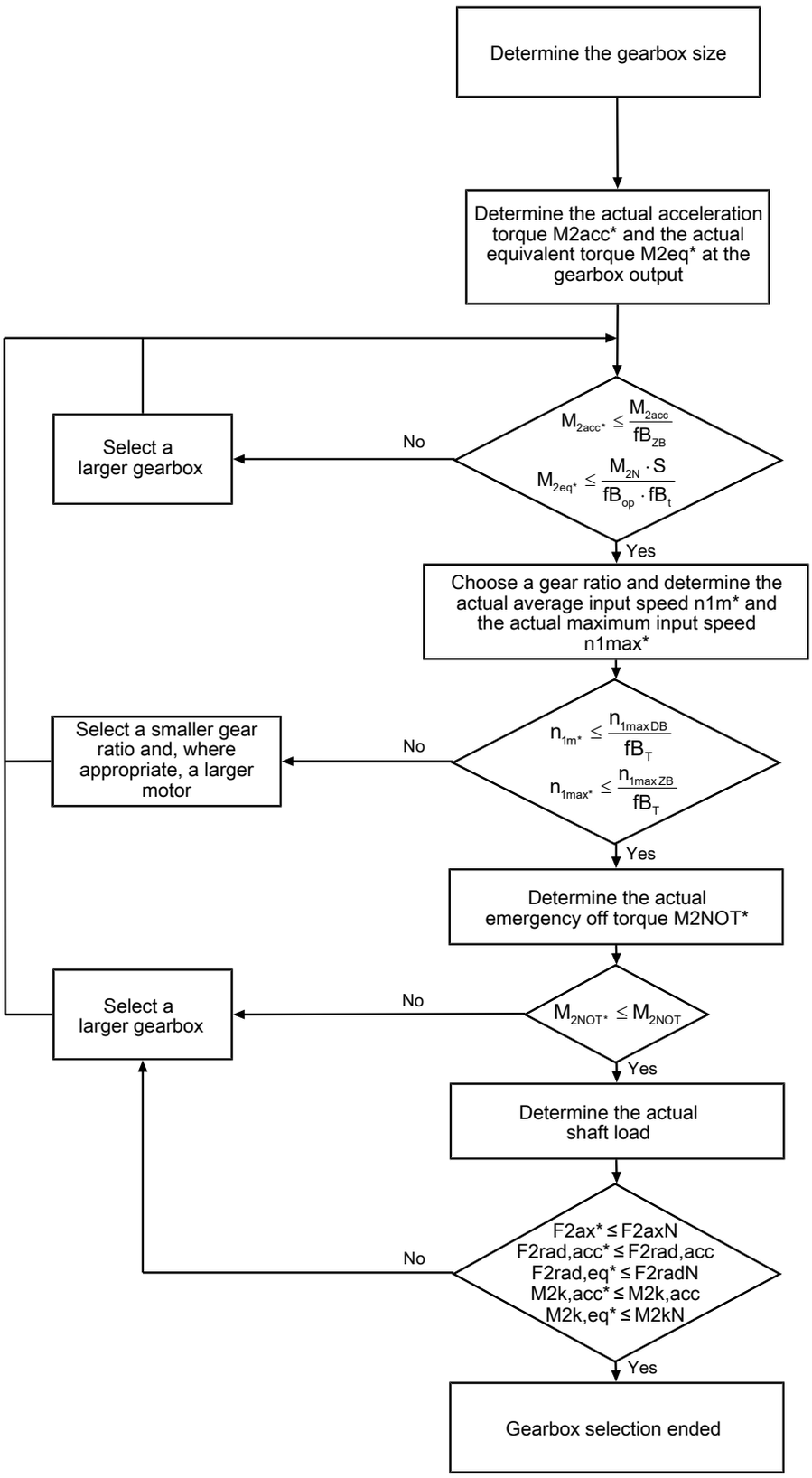

Calculate the forces and tilting torques in the chapter Permitted shaft loads.

Refer to the selection tables for the values for i, n_{1maxDB}, n_{1maxZB}, M_{2acc}, M_{2NOT}, M_{2N} and S.

The values for fB_T, fB_{op}, fB_t and fB_{ZB} can be found in the corresponding tables in this chapter.

Drive selection for motors

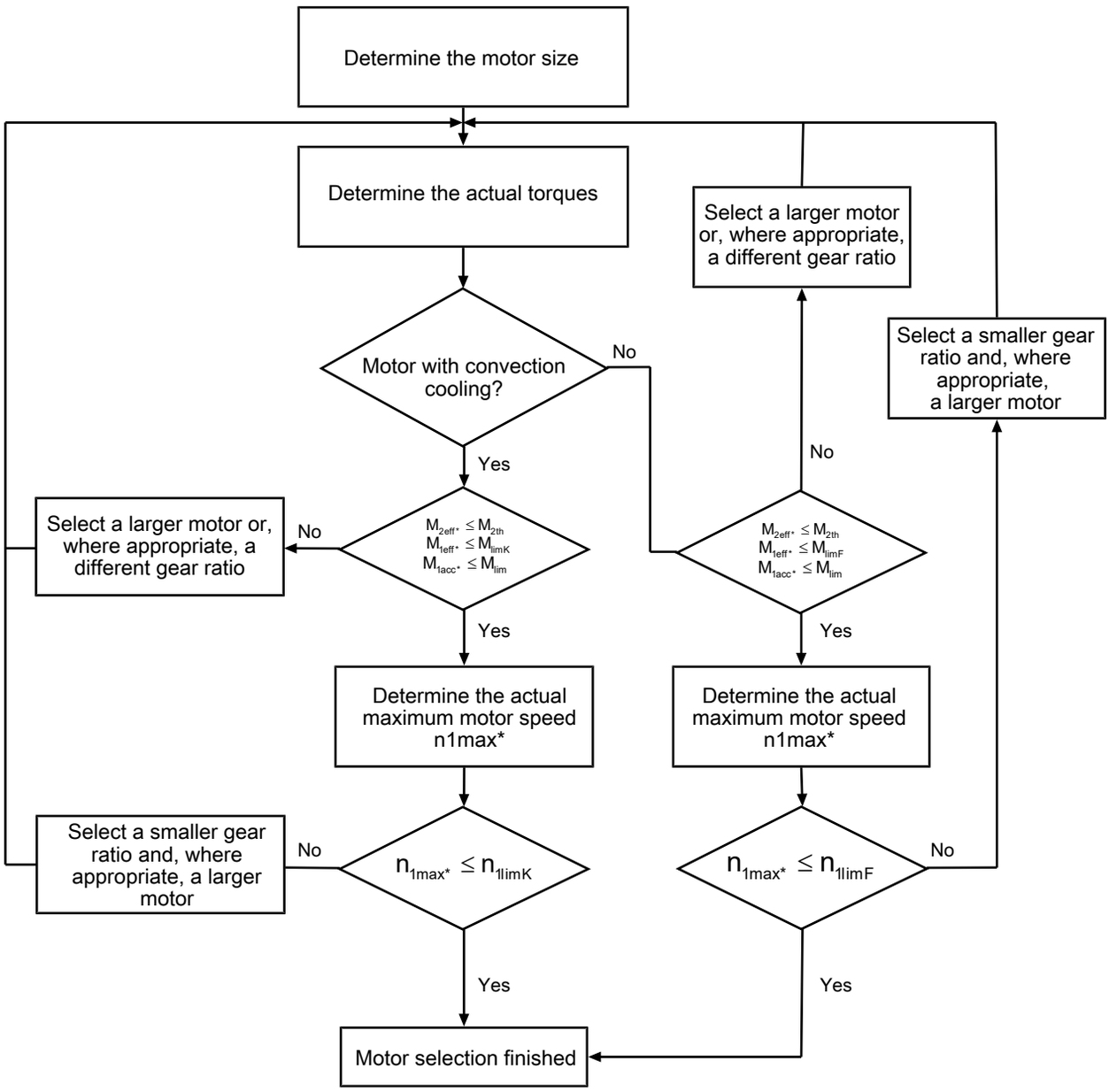

The value for M_{lim}, M_{limK}, M_{limF}, n_{1limK} and n_{1limF} can be found in the motor characteristic curve in the chapter [▷ 17.3]. Note the size, nominal speed n_N and cooling type of the motor.

Example of cyclic operation

The following calculations are based on a representation of the power taken from the output based in accordance with the following example:

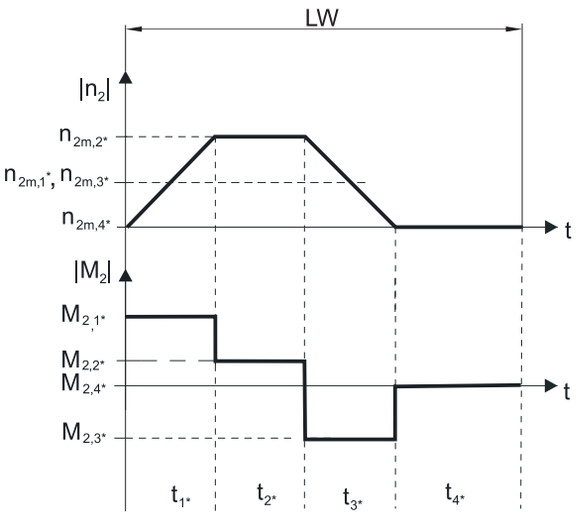

Calculation of the actual maximum acceleration torques

$$M_{2acc*} = J_{tot} \cdot \frac{\Delta n_2}{9{,}55 \cdot \Delta t} + M_{L*}$$

$$M_{1acc*} = \frac{M_{2acc*}}{i \cdot \eta_{get}} + J_1 \cdot \frac{\Delta n_1}{9{,}55 \cdot \Delta t}$$

Calculation of the actual average input speed

$$n_{1m*} = n_{2m*} \cdot i$$

$$n_{2m*} = \frac{\left|n_{2m,1*}\right| \cdot t_{1*} + \ldots + \left|n_{2m,n*}\right| \cdot t_{n*}}{t_{1*} + \ldots + t_{n*}}$$

If $t_{1*} + \ldots + t_{3*} \geq 6$ min, calculate n_{2m*} without the rest phase t_{4*}.

The values for the ratio i can be found in the selection tables.

Calculation of the actual effective torque

$$M_{2eff*} = \sqrt{\frac{t_{1*} \cdot M_{2,1*}{}^2 + \ldots + t_{n*} \cdot M_{2,n*}{}^2}{t_{1*} + \ldots + t_{n*}}}$$

Calculation of the actual emergency off torque

$$M_{2NOT*} = J_{tot} \cdot \frac{\Delta n_2}{9.55 \cdot \Delta t} + M_{L*}$$

Calculation of the actual equivalent torque

$$M_{2eq*} = \sqrt[3]{\frac{\left|n_{2m,1*}\right| \cdot t_{1*} \cdot \left|M_{2,1*}{}^3\right| + \ldots + \left|n_{2m,n*}\right| \cdot t_{n*} \cdot \left|M_{2,n*}{}^3\right|}{\left|n_{2m,1*}\right| \cdot t_{1*} + \ldots + \left|n_{2m,n*}\right| \cdot t_{n*}}}$$

Calculation of the thermal limit torque

Calculate the thermal limit torque M_{2th} for a duty cycle $ED_{10} > 50\%$ and the actual average input speed n_{1m*}. (At $K_{mot,th} \leq 0$ you must reduce the average input speed n_{1m*} accordingly or select another geared motor size.)

$$M_{2th} = M_{op} \cdot i \cdot K_{mot,th}$$

$$K_{mot,th} = 0{,}93 - \frac{a_{th}}{1000} \cdot fB_T \cdot \left(\frac{n_{1m*}}{1000}\right)^3$$

Refer to the selection tables for the values of i and a_{th}.

The values for fB_T can be found in the corresponding table in this chapter.

The value for the torque of the motor at operating point M_{op} with the determined average input speed n_{1m*} can be found in the motor characteristic curve in the chapter [▶ 17.3]. Note the size, nominal speed n_N and cooling type of the motor. The figure below shows an example of reading the torque M_{op} of a motor with convection cooling at the operating point.

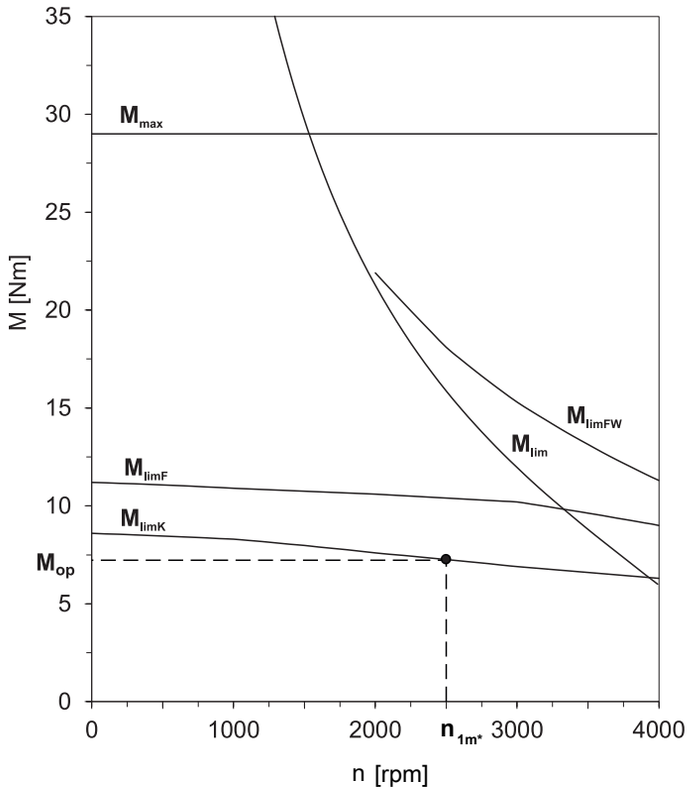

Operating factors

Operating mode	fB_{op}
Uniform continuous operation	1.00
Cyclic operation	1.00
Reversing load cyclic operation	1.00

Run time	fB_t
Daily runtime ≤ 8 h	1.00
Daily runtime ≤ 16 h	1.15
Daily runtime ≤ 24 h	1.20

Cyclic operation	fB_{ZB}
≤ 1000 load changes/hour (LW/h)	1.00
> 1000 load changes/hour (LW/h)	1.15

Temperature		fB_T
Motor cooling	**Surrounding temperature**	
Motor with forced ventilation	≤ 20 °C	0.9
	≤ 30 °C	1.0
	≤ 40 °C	1.15
Motor with convection cooling	≤ 20 °C	1.0
	≤ 30 °C	1.1
	≤ 40 °C	1.25

Notes

- The maximum permitted gearbox temperature (see the "Other product features" chapter) must not be exceeded. Doing so may result in damage to the geared motor.
- For braking from full speed (for example when the power fails or when setting up the machine), note the permitted gearbox torques (M_{2acc}, M_{2NOT}) in the selection tables.

5.6.2 Permitted shaft loads for the output shaft

The values specified in the tables apply to the permitted shaft loads:

- For shaft dimensions in accordance with the catalog
- For output speeds $n_{2m*} \leq 100$ rpm ($F^{2axN} = F_{2ax100}$; $F_{2radN} = F_{2rad100}$; $M_{2kN} = M_{2k100}$)
- Only if radial forces on the gearbox are stabilized by its pilots (housing, flange shaft)

Permitted shaft loads

Type	z_2 [mm]	F_{2ax100} [N]	$F_{2rad100}$ [N]	$F_{2rad,acc}$ [N]	M_{2k100} [Nm]	$M_{2k,acc}$ [Nm]	C_{2k} [Nm/ arcmin]
PHV9	155.0	33000	48387	70968	7500	11000	7500
PHV10	171.0	50000	51462	73099	8800	12500	9500

For other output speeds, download diagrams at https://configurator.stoeber.de/en-US/.

The following applies to output speeds $n_{2m*} > 100$ rpm:

$$F_{2axN} = \frac{F_{2ax100}}{\sqrt[3]{\frac{n_{2m*}}{100\ \text{rpm}}}} \qquad F_{2radN} = \frac{F_{2rad100}}{\sqrt[3]{\frac{n_{2m*}}{100\ \text{rpm}}}} \qquad M_{2kN} = \frac{M_{2k100}}{\sqrt[3]{\frac{n_{2m*}}{100\ \text{rpm}}}}$$

The values for F_{2ax100}, $F_{2rad100}$ and M_{2k100} can be found in the table "Permitted shaft loads" in this chapter.

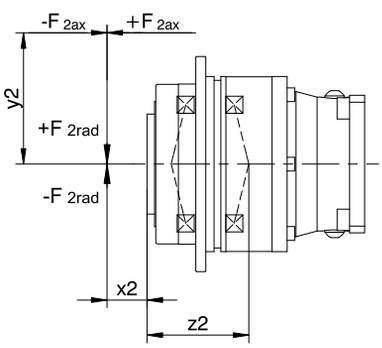

Fig. 1: Force application points

You can determine the permitted radial forces from the permitted tilting torque M_{2kN} and $M_{2k,acc}$. The actual radial forces may not exceed the permitted radial forces. The permitted radial forces pertain to the shaft end (x2 = 0).

$$M_{2k,acc*} = \frac{2 \cdot F_{2ax*} \cdot y_2 + F_{2rad,acc*} \cdot (x_2 + z_2)}{1000}$$

For applications with multiple axial and/or radial forces, you must add the forces as vectors.

In the event of EMERGENCY OFF operation (max. 1000 load changes), you can multiply the permitted forces and torques for F_{2ax100}, $F_{2rad100}$ and M_{2k100} by a factor of two.

Also note the calculation for equivalent values:

$$M_{2k,eq*} = \sqrt[3]{\frac{|n_{2m,1*}| \cdot t_{1*} \cdot |M_{2k,acc,1*}^{\ 3}| + \ldots + |n_{2m,n*}| \cdot t_{n*} \cdot |M_{2k,acc,n*}^{\ 3}|}{|n_{2m,1*}| \cdot t_{1*} + \ldots + |n_{2m,n*}| \cdot t_{n*}}}$$

$$F_{2rad,eq*} = \sqrt[3]{\frac{|n_{2m,1*}| \cdot t_{1*} \cdot |F_{2rad,acc,1*}^{\ 3}| + \ldots + |n_{2m,n*}| \cdot t_{n*} \cdot |F_{2rad,acc,n*}^{\ 3}|}{|n_{2m,1*}| \cdot t_{1*} + \ldots + |n_{2m,n*}| \cdot t_{n*}}}$$

The following apply to the bearing service life L_{10h} ($ED_{10} \leq 40\%$):

$L_{10h} > 10000$ h with $1 < M_{2kN}/M_{2k*} < 1.25$

$L_{10h} > 20000$ h with $1.25 < M_{2kN}/M_{2k*} < 1.5$

$L_{10h} > 30000$ h with $1.5 < M_{2kN}/M_{2k*}$

For different duty cycles:

$$L_{10h} > L_{10h(ED_{10}=40\%)} \cdot \frac{40\%}{ED_{10}}$$

5.6.3 Recommendation for radial shaft seal rings

For a duty cycle > 60% and higher surrounding temperatures, we recommend radial shaft seal rings made of FKM at the output.

Properties:

- Excellent temperature resistance
- High chemical stability
- Very good resistance to aging
- Excellent resistance in oils and greases
- For use in the food, beverage and pharmaceutical industries

Leak-proofness

Our gearboxes are equipped with high-quality radial shaft seal rings and checked for leaks. However, a leak cannot be fully ruled out over the length of use of a gearbox. If you use a gearbox with goods incompatible with the lubricant, you must take measures to prevent direct contact with the gearbox lubricant in case of a leak.

5.6.4 Reverse operation

To ensure lubrication for circulating gearing parts during cyclic reverse operation from ± 20° to ± 90° at the output, pay careful attention to the position of the output shaft for the horizontal mounting of the gearbox, as shown in the diagrams below.

The images show the center position of reverse operation.

Cyclic reverse operation ≤ ± 20° on request.

Size 9 – 10
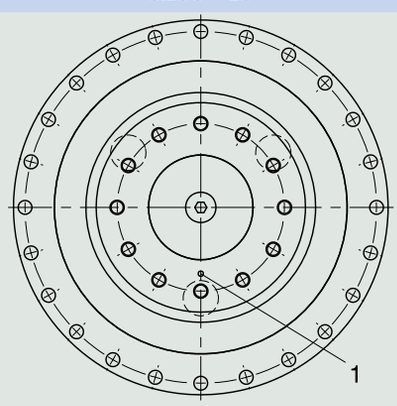
1 Position of the mark: bottom

Please note that the hole pattern may be different, depending on the size of the planetary gearbox.

5.7 Additional documentation

Additional documentation related to the product can be found at
http://www.stoeber.de/en/downloads/

Enter the ID of the documentation in the Search term field.

Documentation	ID
Operating manual gearboxes, geared motors PHV94 – PHV104	443355_en
Operating manual for EZ synchronous servo motors	443032_en

6 PE planetary geared motors

Table of contents

6.1 Overview 110

6.2 Selection tables 111

6.3 Dimensional drawings 115

6.3.1 P shaft design (solid shaft with feather key) 116

6.4 Type designation 118

6.5 Product description 118

6.5.1 Input options 118

6.5.2 Installation conditions 118

6.5.3 Lubricants 118

6.5.4 Other product features 119

6.5.5 Direction of rotation 119

6.6 Project configuration 119

6.6.1 Drive selection 120

6.6.2 Permitted shaft loads for the output shaft 124

6.6.3 Radial shaft seal rings 125

6.7 Additional documentation 125

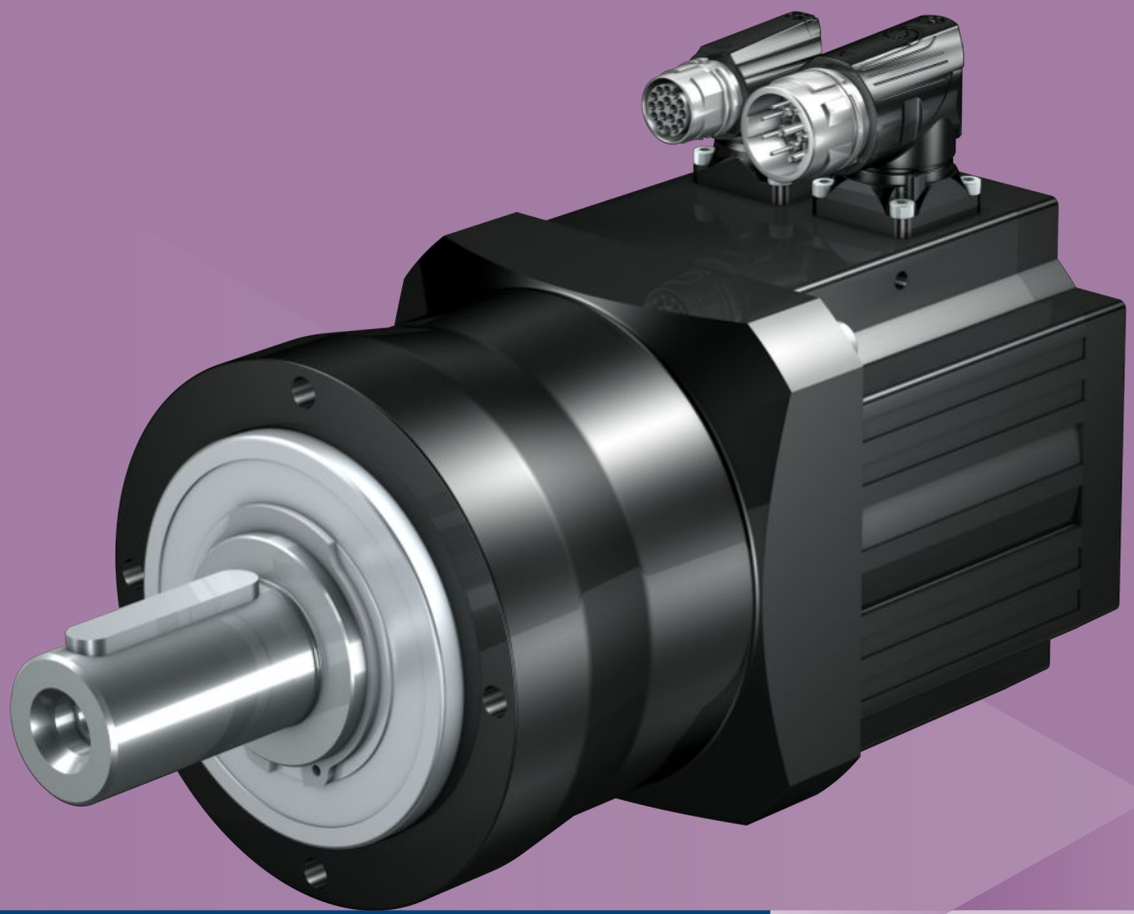

6 Planetary geared motors PE

6.1 Overview

Cost-efficient helical-geared planetary geared motors

Features

Power density	★★★☆☆
Backlash	★★★☆☆
Price category	€
Shaft load	★★☆☆☆
Smooth operation	★★★☆☆
Torsional stiffness	★★★☆☆
Mass moment of inertia	★★★★★
Helical gearing	✓
Maintenance-free	✓
Any mounting position	✓
Non-contact sealing at the input	✓
Compact and highly dynamic due to direct motor attachment	✓

Key ★☆☆☆☆ good | ★★★★★ excellent
€ Economy | €€€€€ Premium

Technical data

i	3 – 50
M_{2acc}	5.7 – 250 Nm
$\Delta\phi_2$	8 – 13 arcmin
η_{get}	95 – 97 %

6.2 Selection tables

The technical data specified in the selection tables applies to:

- Installation altitudes up to 1000 m above sea level
- Surrounding temperatures from 0 °C to 40 °C
- Drives with convection-cooled motors (e.g. EZ401**U**)

For the technical data on drives with forced ventilated motors (e.g. EZ401**B**), refer to https://configurator.stoeber.de/en-US/.

An explanation of the formula symbols can be found in Chapter [▷ 20.1].

n_{2N} [rpm]	M_{2N} [Nm]	$M_{2,0}$ [Nm]	a_{th}	S	Type	M_{2acc} [Nm]	M_{2NOT} [Nm]	i	i_{exakt}	n_{1maxDB} [rpm]	n_{1maxZB} [rpm]	J_1 [kgcm²]	$\Delta\varphi_2$ [arcmin]	C_2 [Nm/ arcmin]	m [kg]
PE2 (n_{1N} = 3000 min^{-1}, $M_{2acc,max}$ = 19 Nm)															
429	6.3	6.5	2.7	1.0	PE221_0070 EZ301U	18	32	7.000	7/1	4500	8000	0.20	10.0	1.3	2.1
600	4.5	4.6	4.1	1.4	PE221_0050 EZ301U	14	32	5.000	5/1	4000	8000	0.21	10.0	1.4	2.1
750	3.6	3.7	5.4	1.8	PE221_0040 EZ301U	11	32	4.000	4/1	4000	8000	0.22	10.0	1.5	2.1
750	6.2	6.5	9.2	1.0	PE221_0040 EZ302U	19	32	4.000	4/1	4000	8000	0.32	10.0	1.5	2.7
PE2 (n_{1N} = 6000 min^{-1}, $M_{2acc,max}$ = 19 Nm)															
375	6.1	6.7	6.3	1.0	PE222_0160 EZ202U	19	32	16.00	16/1	4000	8000	0.17	13.0	1.4	2.6
600	3.9	4.3	1.0	1.3	PE221_0100 EZ202U	14	32	10.00	10/1	4500	8000	0.13	10.0	1.2	2.1
857	2.7	3.0	1.5	1.9	PE221_0070 EZ202U	10	32	7.000	7/1	4500	8000	0.14	10.0	1.3	2.1
857	4.1	4.7	2.3	1.2	PE221_0070 EZ203U	18	32	7.000	7/1	4500	8000	0.18	10.0	1.3	2.3
1200	1.9	2.1	2.2	2.6	PE221_0050 EZ202U	7.2	32	5.000	5/1	4000	8000	0.14	10.0	1.4	2.1
1200	3.0	3.3	3.4	1.7	PE221_0050 EZ203U	13	32	5.000	5/1	4000	8000	0.18	10.0	1.4	2.3
1200	4.3	4.6	5.0	1.2	PE221_0050 EZ301U	14	32	5.000	5/1	4000	8000	0.21	10.0	1.4	2.1
1500	1.6	1.7	2.9	3.2	PE221_0040 EZ202U	5.7	32	4.000	4/1	4000	8000	0.16	10.0	1.5	2.1
1500	2.4	2.7	4.4	2.1	PE221_0040 EZ203U	10	32	4.000	4/1	4000	8000	0.20	10.0	1.5	2.3
1500	3.5	3.7	6.5	1.5	PE221_0040 EZ301U	11	32	4.000	4/1	4000	8000	0.22	10.0	1.5	2.1
PE3 (n_{1N} = 3000 min^{-1}, $M_{2acc,max}$ = 50 Nm)															
120	22	23	3.6	1.1	PE322_0250 EZ301U	50	90	25.00	25/1	4000	8000	0.23	10.0	4.2	3.6
150	18	18	4.0	1.3	PE322_0200 EZ301U	50	90	20.00	20/1	4000	8000	0.25	10.0	4.0	3.6
188	14	14	4.5	1.7	PE322_0160 EZ301U	43	90	16.00	16/1	4000	8000	0.25	10.0	4.1	3.6
300	9.0	9.2	0.7	2.3	PE321_0100 EZ301U	27	90	10.00	10/1	4000	7000	0.20	8.0	3.7	3.0
300	15	16	1.2	1.3	PE321_0100 EZ302U	48	90	10.00	10/1	4000	7000	0.30	8.0	3.7	3.6
300	20	21	1.6	1.0	PE321_0100 EZ303U	48	90	10.00	10/1	4000	7000	0.41	8.0	3.7	4.1
429	6.3	6.5	1.1	3.3	PE321_0070 EZ301U	19	90	7.000	7/1	4000	7000	0.22	8.0	4.1	3.0
429	11	11	1.8	1.9	PE321_0070 EZ302U	34	90	7.000	7/1	4000	7000	0.32	8.0	4.1	3.6
429	14	15	2.4	1.5	PE321_0070 EZ303U	48	90	7.000	7/1	4000	7000	0.43	8.0	4.1	4.1
429	19	20	3.3	1.1	PE321_0070 EZ401U	50	90	7.000	7/1	4000	7000	0.96	8.0	4.1	5.5
600	4.5	4.6	1.7	4.4	PE321_0050 EZ301U	14	90	5.000	5/1	3700	7000	0.24	8.0	4.5	3.0
600	7.7	8.1	2.9	2.6	PE321_0050 EZ302U	24	90	5.000	5/1	3700	7000	0.34	8.0	4.5	3.6
600	10	11	3.7	2.0	PE321_0050 EZ303U	34	90	5.000	5/1	3700	7000	0.45	8.0	4.5	4.1
600	14	15	5.1	1.5	PE321_0050 EZ401U	41	90	5.000	5/1	3700	7000	0.98	8.0	4.5	5.5
750	6.2	6.5	3.9	3.1	PE321_0040 EZ302U	19	85	4.000	4/1	3700	7000	0.38	8.0	4.4	3.6
750	8.0	8.5	5.1	2.4	PE321_0040 EZ303U	27	85	4.000	4/1	3700	7000	0.49	8.0	4.4	4.1
750	11	12	6.9	1.8	PE321_0040 EZ401U	33	85	4.000	4/1	3700	7000	1.0	8.0	4.4	5.5
750	18	20	12	1.0	PE321_0040 EZ402U	46	85	4.000	4/1	3700	7000	1.7	8.0	4.4	6.6
1000	4.6	4.9	6.3	3.6	PE321_0030 EZ302U	15	64	3.000	3/1	3500	6000	0.47	8.0	3.5	3.6
1000	6.0	6.4	8.2	2.8	PE321_0030 EZ303U	20	64	3.000	3/1	3500	6000	0.58	8.0	3.5	4.1
1000	8.1	8.7	11	2.0	PE321_0030 EZ401U	25	64	3.000	3/1	3500	6000	1.1	8.0	3.5	5.5
1000	14	15	19	1.2	PE321_0030 EZ402U	40	64	3.000	3/1	3500	6000	1.8	8.0	3.5	6.6
PE3 (n_{1N} = 6000 min^{-1}, $M_{2acc,max}$ = 50 Nm)															
150	15	17	1.5	1.2	PE322_0400 EZ202U	44	88	40.00	40/1	4500	8000	0.14	10.0	3.9	3.5
171	13	15	1.6	1.4	PE322_0350 EZ202U	49	90	35.00	35/1	4000	8000	0.15	10.0	4.2	3.5
214	11	12	1.8	1.8	PE322_0280 EZ202U	39	88	28.00	28/1	4000	8000	0.15	10.0	4.0	3.5
214	16	18	2.8	1.2	PE322_0280 EZ203U	44	88	28.00	28/1	4000	8000	0.19	10.0	4.0	3.8
240	9.5	10	1.9	2.0	PE322_0250 EZ202U	35	90	25.00	25/1	4000	8000	0.17	10.0	4.2	3.5
240	14	16	2.9	1.3	PE322_0250 EZ203U	50	90	25.00	25/1	4000	8000	0.21	10.0	4.2	3.8
300	7.6	8.4	2.2	2.5	PE322_0200 EZ202U	28	90	20.00	20/1	4000	8000	0.19	10.0	4.0	3.5
300	12	13	3.3	1.6	PE322_0200 EZ203U	50	90	20.00	20/1	4000	8000	0.23	10.0	4.0	3.8
300	17	18	4.8	1.1	PE322_0200 EZ301U	50	90	20.00	20/1	4000	8000	0.25	10.0	4.0	3.6
375	6.1	6.7	2.4	3.1	PE322_0160 EZ202U	22	90	16.00	16/1	4000	8000	0.19	10.0	4.1	3.5
375	9.3	10	3.7	2.0	PE322_0160 EZ203U	41	90	16.00	16/1	4000	8000	0.23	10.0	4.1	3.8
375	14	14	5.4	1.4	PE322_0160 EZ301U	43	90	16.00	16/1	4000	8000	0.25	10.0	4.1	3.6
600	8.6	9.2	0.9	1.9	PE321_0100 EZ301U	27	90	10.00	10/1	4000	7000	0.20	8.0	3.7	3.0
600	15	16	1.4	1.1	PE321_0100 EZ302U	48	90	10.00	10/1	4000	7000	0.30	8.0	3.7	3.6

n_{2N} [rpm]	M_{2N} [Nm]	$M_{2,0}$ [Nm]	a_{th}	S	Type	M_{2acc} [Nm]	M_{2NOT} [Nm]	i	i_{exakt}	n_{1maxDB} [rpm]	n_{1maxZB} [rpm]	J_1 [kgcm²]	$\Delta\varphi_2$ [arcmin]	C_2 [Nm/ arcmin]	m [kg]
PE3 (n_{1N} = 6000 min^{-1}, $M_{2acc,max}$ = 50 Nm)															
857	6.0	6.5	1.3	2.7	PE321_0070 EZ301U	19	90	7.000	7/1	4000	7000	0.22	8.0	4.1	3.0
857	10	11	2.2	1.6	PE321_0070 EZ302U	34	90	7.000	7/1	4000	7000	0.32	8.0	4.1	3.6
857	13	15	2.9	1.2	PE321_0070 EZ303U	48	90	7.000	7/1	4000	7000	0.43	8.0	4.1	4.1
857	16	19	3.4	1.0	PE321_0070 EZ401U	50	90	7.000	7/1	4000	7000	0.96	8.0	4.1	5.5
1200	4.3	4.6	2.0	3.6	PE321_0050 EZ301U	14	90	5.000	5/1	3700	7000	0.24	8.0	4.5	3.0
1200	7.3	8.1	3.4	2.2	PE321_0050 EZ302U	24	90	5.000	5/1	3700	7000	0.34	8.0	4.5	3.6
1200	9.5	11	4.5	1.7	PE321_0050 EZ303U	34	90	5.000	5/1	3700	7000	0.45	8.0	4.5	4.1
1200	11	14	5.2	1.4	PE321_0050 EZ401U	41	90	5.000	5/1	3700	7000	0.98	8.0	4.5	5.5
1500	3.5	3.7	2.8	4.4	PE321_0040 EZ301U	11	85	4.000	4/1	3700	7000	0.28	8.0	4.4	3.0
1500	5.8	6.5	4.7	2.6	PE321_0040 EZ302U	19	85	4.000	4/1	3700	7000	0.38	8.0	4.4	3.6
1500	7.6	8.7	6.1	2.0	PE321_0040 EZ303U	27	85	4.000	4/1	3700	7000	0.49	8.0	4.4	4.1
1500	8.9	11	7.1	1.7	PE321_0040 EZ401U	33	85	4.000	4/1	3700	7000	1.0	8.0	4.4	5.5
1500	14	19	11	1.1	PE321_0040 EZ402U	46	85	4.000	4/1	3700	7000	1.7	8.0	4.4	6.6
2000	4.4	4.9	7.5	3.0	PE321_0030 EZ302U	15	64	3.000	3/1	3500	6000	0.47	8.0	3.5	3.6
2000	5.7	6.5	9.8	2.3	PE321_0030 EZ303U	20	64	3.000	3/1	3500	6000	0.58	8.0	3.5	4.1
2000	6.7	8.1	12	2.0	PE321_0030 EZ401U	25	64	3.000	3/1	3500	6000	1.1	8.0	3.5	5.5
2000	10	14	18	1.3	PE321_0030 EZ402U	40	64	3.000	3/1	3500	6000	1.8	8.0	3.5	6.6
PE4 (n_{1N} = 3000 min^{-1}, $M_{2acc,max}$ = 110 Nm)															
60	44	45	1.3	1.2	PE422_0500 EZ301U	102	200	50.00	50/1	4000	7000	0.21	10.0	13	5.5
75	35	36	1.5	1.5	PE422_0400 EZ301U	95	190	40.00	40/1	4000	7000	0.21	10.0	13	5.5
86	31	32	1.6	1.7	PE422_0350 EZ301U	93	200	35.00	35/1	4000	7000	0.23	10.0	13	5.5
107	25	25	1.7	2.1	PE422_0280 EZ301U	74	190	28.00	28/1	4000	7000	0.23	10.0	13	5.5
107	42	45	3.0	1.2	PE422_0280 EZ302U	95	190	28.00	28/1	4000	7000	0.33	10.0	13	6.1
120	22	23	1.8	2.3	PE422_0250 EZ301U	67	200	25.00	25/1	3700	7000	0.27	10.0	13	5.5
120	38	40	3.2	1.4	PE422_0250 EZ302U	103	200	25.00	25/1	3700	7000	0.37	10.0	13	6.1
120	49	52	4.1	1.0	PE422_0250 EZ303U	103	200	25.00	25/1	3700	7000	0.48	10.0	13	6.6
150	18	18	2.1	2.9	PE422_0200 EZ301U	53	200	20.00	20/1	3700	7000	0.32	10.0	13	5.5
150	30	32	3.5	1.7	PE422_0200 EZ302U	95	200	20.00	20/1	3700	7000	0.42	10.0	13	6.1
150	39	42	4.6	1.3	PE422_0200 EZ303U	104	200	20.00	20/1	3700	7000	0.53	10.0	13	6.6
188	14	14	2.3	3.7	PE422_0160 EZ301U	43	190	16.00	16/1	3700	7000	0.32	10.0	13	5.5
188	24	26	4.0	2.1	PE422_0160 EZ302U	76	190	16.00	16/1	3700	7000	0.42	10.0	13	6.1
188	31	33	5.1	1.6	PE422_0160 EZ303U	95	190	16.00	16/1	3700	7000	0.53	10.0	13	6.6
188	43	46	7.0	1.2	PE422_0160 EZ401U	95	190	16.00	16/1	3700	7000	1.1	10.0	13	8.0
300	27	29	1.1	1.8	PE421_0100 EZ401U	82	184	10.00	10/1	3600	6000	0.97	8.0	10	6.8
300	42	46	1.7	1.1	PE421_0100 EZ501U	92	184	10.00	10/1	3600	6000	2.9	8.0	10	7.8
300	46	50	1.9	1.0	PE421_0100 EZ402U	92	184	10.00	10/1	3600	6000	1.7	8.0	10	7.9
429	19	20	1.7	2.5	PE421_0070 EZ401U	58	200	7.000	7/1	3600	6000	1.0	8.0	13	6.8
429	29	32	2.6	1.6	PE421_0070 EZ501U	100	200	7.000	7/1	3600	6000	3.0	8.0	13	7.8
429	32	35	2.9	1.5	PE421_0070 EZ402U	100	200	7.000	7/1	3600	6000	1.7	8.0	13	7.9
429	47	58	4.2	1.0	PE421_0070 EZ404U	100	200	7.000	7/1	3600	6000	3.1	8.0	13	10
600	14	15	2.8	3.3	PE421_0050 EZ401U	41	200	5.000	5/1	3400	6000	1.1	8.0	14	6.8
600	21	23	4.2	2.1	PE421_0050 EZ501U	78	200	5.000	5/1	3400	6000	3.1	8.0	14	7.8
600	23	25	4.6	2.0	PE421_0050 EZ402U	78	200	5.000	5/1	3400	6000	1.8	8.0	14	7.9
600	33	42	6.8	1.3	PE421_0050 EZ404U	109	200	5.000	5/1	3400	6000	3.2	8.0	14	10
600	36	39	7.3	1.2	PE421_0050 EZ502U	109	200	5.000	5/1	3400	6000	5.4	8.0	14	9.3
750	11	12	3.7	4.0	PE421_0040 EZ401U	33	200	4.000	4/1	3400	6000	1.2	8.0	14	6.8
750	17	18	5.6	2.6	PE421_0040 EZ501U	62	200	4.000	4/1	3400	6000	3.2	8.0	14	7.8
750	18	20	6.2	2.4	PE421_0040 EZ402U	62	200	4.000	4/1	3400	6000	1.9	8.0	14	7.9
750	27	33	9.0	1.6	PE421_0040 EZ404U	100	200	4.000	4/1	3400	6000	3.3	8.0	14	10
750	29	31	9.7	1.5	PE421_0040 EZ502U	100	200	4.000	4/1	3400	6000	5.5	8.0	14	9.3
750	38	43	13	1.2	PE421_0040 EZ503U	100	200	4.000	4/1	3400	6000	7.9	8.0	14	11
1000	8.1	8.7	6.3	4.4	PE421_0030 EZ401U	25	180	3.000	3/1	3000	5500	1.5	8.0	12	6.8
1000	13	14	9.7	2.9	PE421_0030 EZ501U	47	180	3.000	3/1	3000	5500	3.5	8.0	12	7.8
1000	14	15	11	2.6	PE421_0030 EZ402U	47	180	3.000	3/1	3000	5500	2.2	8.0	12	7.9
1000	20	25	16	1.8	PE421_0030 EZ404U	84	180	3.000	3/1	3000	5500	3.6	8.0	12	10
1000	22	23	17	1.7	PE421_0030 EZ502U	90	180	3.000	3/1	3000	5500	5.8	8.0	12	9.3
1000	28	32	22	1.3	PE421_0030 EZ503U	90	180	3.000	3/1	3000	5500	8.2	8.0	12	11
PE4 (n_{1N} = 4500 min^{-1}, $M_{2acc,max}$ = 100 Nm)															
1125	37	59	14	1.0	PE421_0040 EZ505U	100	200	4.000	4/1	3400	6000	12	8.0	14	14
1500	28	45	25	1.1	PE421_0030 EZ505U	90	180	3.000	3/1	3000	5500	13	8.0	12	14
PE4 (n_{1N} = 6000 min^{-1}, $M_{2acc,max}$ = 110 Nm)															
150	34	36	1.8	1.2	PE422_0400 EZ301U	95	190	40.00	40/1	4000	7000	0.21	10.0	13	5.5
171	30	32	1.9	1.4	PE422_0350 EZ301U	93	200	35.00	35/1	4000	7000	0.23	10.0	13	5.5
214	24	25	2.1	1.7	PE422_0280 EZ301U	74	190	28.00	28/1	4000	7000	0.23	10.0	13	5.5
214	40	45	3.6	1.0	PE422_0280 EZ302U	95	190	28.00	28/1	4000	7000	0.33	10.0	13	6.1

n_{2N} [rpm]	M_{2N} [Nm]	$M_{2,0}$ [Nm]	a_{th}	S	Type	M_{2acc} [Nm]	M_{2NOT} [Nm]	i	i_{exakt}	n_{1maxDB} [rpm]	n_{1maxZB} [rpm]	J_1 [kgcm²]	$\Delta\varphi_2$ [arcmin]	C_2 [Nm/ arcmin]	m [kg]
PE4 (n_{1N} = 6000 min^{-1}, $M_{2acc,max}$ = 110 Nm)															
240	21	23	2.2	1.9	PE422_0250 EZ301U	67	200	25.00	25/1	3700	7000	0.27	10.0	13	5.5
240	36	40	3.8	1.1	PE422_0250 EZ302U	103	200	25.00	25/1	3700	7000	0.37	10.0	13	6.1
300	17	18	2.5	2.4	PE422_0200 EZ301U	53	200	20.00	20/1	3700	7000	0.32	10.0	13	5.5
300	29	32	4.2	1.4	PE422_0200 EZ302U	95	200	20.00	20/1	3700	7000	0.42	10.0	13	6.1
300	37	43	5.5	1.1	PE422_0200 EZ303U	104	200	20.00	20/1	3700	7000	0.53	10.0	13	6.6
375	14	14	2.8	3.0	PE422_0160 EZ301U	43	190	16.00	16/1	3700	7000	0.32	10.0	13	5.5
375	23	26	4.7	1.8	PE422_0160 EZ302U	76	190	16.00	16/1	3700	7000	0.42	10.0	13	6.1
375	30	34	6.1	1.4	PE422_0160 EZ303U	95	190	16.00	16/1	3700	7000	0.53	10.0	13	6.6
375	35	43	7.2	1.2	PE422_0160 EZ401U	95	190	16.00	16/1	3700	7000	1.1	10.0	13	8.0
600	22	27	1.2	1.7	PE421_0100 EZ401U	82	184	10.00	10/1	3600	6000	0.97	8.0	10	6.8
600	33	43	1.7	1.1	PE421_0100 EZ501U	92	184	10.00	10/1	3600	6000	2.9	8.0	10	7.8
600	34	48	1.8	1.1	PE421_0100 EZ402U	92	184	10.00	10/1	3600	6000	1.7	8.0	10	7.9
857	16	19	1.8	2.4	PE421_0070 EZ401U	58	200	7.000	7/1	3600	6000	1.0	8.0	13	6.8
857	23	30	2.6	1.6	PE421_0070 EZ501U	100	200	7.000	7/1	3600	6000	3.0	8.0	13	7.8
857	24	33	2.7	1.6	PE421_0070 EZ402U	100	200	7.000	7/1	3600	6000	1.7	8.0	13	7.9
857	35	53	4.0	1.1	PE421_0070 EZ502U	100	200	7.000	7/1	3600	6000	5.3	8.0	13	9.3
1200	11	14	2.9	3.2	PE421_0050 EZ401U	41	200	5.000	5/1	3400	6000	1.1	8.0	14	6.8
1200	16	21	4.2	2.1	PE421_0050 EZ501U	78	200	5.000	5/1	3400	6000	3.1	8.0	14	7.8
1200	17	24	4.3	2.1	PE421_0050 EZ402U	78	200	5.000	5/1	3400	6000	1.8	8.0	14	7.9
1200	25	38	6.5	1.4	PE421_0050 EZ502U	109	200	5.000	5/1	3400	6000	5.4	8.0	14	9.3
1200	28	41	7.2	1.3	PE421_0050 EZ404U	109	200	5.000	5/1	3400	6000	3.2	8.0	14	10
1200	30	51	7.7	1.2	PE421_0050 EZ503U	109	200	5.000	5/1	3400	6000	7.8	8.0	14	11
1500	8.9	11	3.8	3.9	PE421_0040 EZ401U	33	200	4.000	4/1	3400	6000	1.2	8.0	14	6.8
1500	13	17	5.6	2.6	PE421_0040 EZ501U	62	200	4.000	4/1	3400	6000	3.2	8.0	14	7.8
1500	14	19	5.8	2.6	PE421_0040 EZ402U	62	200	4.000	4/1	3400	6000	1.9	8.0	14	7.9
1500	20	30	8.6	1.7	PE421_0040 EZ502U	100	200	4.000	4/1	3400	6000	5.5	8.0	14	9.3
1500	23	33	9.6	1.5	PE421_0040 EZ404U	100	200	4.000	4/1	3400	6000	3.3	8.0	14	10
1500	24	41	10	1.4	PE421_0040 EZ503U	100	200	4.000	4/1	3400	6000	7.9	8.0	14	11
PE5 (n_{1N} = 3000 min^{-1}, $M_{2acc,max}$ = 250 Nm)															
75	106	114	2.0	1.2	PE522_0400 EZ401U	240	480	40.00	40/1	3600	6000	0.99	10.0	33	12
86	93	100	2.1	1.4	PE522_0350 EZ401U	250	500	35.00	35/1	3600	6000	1.0	10.0	33	12
107	74	80	2.4	1.7	PE522_0280 EZ401U	226	480	28.00	28/1	3600	6000	1.0	10.0	33	12
107	114	125	3.6	1.1	PE522_0280 EZ501U	240	480	28.00	28/1	3600	6000	3.0	10.0	33	13
107	125	138	4.0	1.0	PE522_0280 EZ402U	240	480	28.00	28/1	3600	6000	1.7	10.0	33	13
120	67	71	2.5	1.9	PE522_0250 EZ401U	202	500	25.00	25/1	3400	6000	1.1	10.0	33	12
120	102	112	3.9	1.2	PE522_0250 EZ501U	250	500	25.00	25/1	3400	6000	3.1	10.0	33	13
120	112	124	4.2	1.1	PE522_0250 EZ402U	250	500	25.00	25/1	3400	6000	1.8	10.0	33	13
150	53	57	2.8	2.4	PE522_0200 EZ401U	162	500	20.00	20/1	3400	6000	1.3	10.0	33	12
150	82	89	4.3	1.6	PE522_0200 EZ501U	250	500	20.00	20/1	3400	6000	3.2	10.0	33	13
150	89	99	4.7	1.4	PE522_0200 EZ402U	250	500	20.00	20/1	3400	6000	2.0	10.0	33	13
188	43	46	3.1	3.0	PE522_0160 EZ401U	129	480	16.00	16/1	3400	6000	1.3	10.0	33	12
188	65	71	4.8	1.9	PE522_0160 EZ501U	240	480	16.00	16/1	3400	6000	3.3	10.0	33	13
188	71	79	5.3	1.8	PE522_0160 EZ402U	240	480	16.00	16/1	3400	6000	2.0	10.0	33	13
188	105	131	7.7	1.2	PE522_0160 EZ404U	240	480	16.00	16/1	3400	6000	3.3	10.0	33	15
188	112	122	8.3	1.1	PE522_0160 EZ502U	240	480	16.00	16/1	3400	6000	5.6	10.0	33	15
300	42	46	2.2	2.5	PE521_0100 EZ501U	155	440	10.00	10/1	3000	5000	3.1	8.0	27	11
300	72	78	3.7	1.4	PE521_0100 EZ502U	220	440	10.00	10/1	3000	5000	5.4	8.0	27	12
300	72	81	3.7	1.4	PE521_0100 EZ701U	194	440	10.00	10/1	3000	5000	8.7	8.0	27	14
300	94	108	4.9	1.1	PE521_0100 EZ503U	220	440	10.00	10/1	3000	5000	7.7	8.0	27	14
429	29	32	3.3	3.5	PE521_0070 EZ501U	109	500	7.000	7/1	2800	5000	3.2	8.0	32	11
429	50	54	5.7	2.1	PE521_0070 EZ502U	210	500	7.000	7/1	2800	5000	5.5	8.0	32	12
429	50	56	5.7	2.1	PE521_0070 EZ701U	136	500	7.000	7/1	2800	5000	8.8	8.0	32	14
429	66	75	7.5	1.6	PE521_0070 EZ503U	250	500	7.000	7/1	2800	5000	7.9	8.0	32	14
429	81	98	9.3	1.3	PE521_0070 EZ702U	250	500	7.000	7/1	2800	5000	14	8.0	32	17
429	92	109	10	1.1	PE521_0070 EZ505U	250	500	7.000	7/1	2800	5000	12	8.0	32	17
600	21	23	5.0	4.9	PE521_0050 EZ501U	78	432	5.000	5/1	2600	5000	3.5	8.0	36	11
600	36	39	8.6	2.9	PE521_0050 EZ502U	150	432	5.000	5/1	2600	5000	5.8	8.0	36	12
600	36	40	8.6	2.9	PE521_0050 EZ701U	97	500	5.000	5/1	2600	5000	9.1	8.0	36	14
600	47	54	11	2.2	PE521_0050 EZ503U	209	432	5.000	5/1	2600	5000	8.2	8.0	36	14
600	58	70	14	1.8	PE521_0050 EZ702U	199	500	5.000	5/1	2600	5000	14	8.0	36	17
600	65	78	16	1.6	PE521_0050 EZ505U	250	432	5.000	5/1	2600	5000	13	8.0	36	17
600	80	101	19	1.3	PE521_0050 EZ703U	250	500	5.000	5/1	2600	5000	22	8.0	36	19
750	29	31	11	3.6	PE521_0040 EZ502U	120	345	4.000	4/1	2600	5000	6.2	8.0	37	12
750	29	32	11	3.6	PE521_0040 EZ701U	78	500	4.000	4/1	2600	5000	9.5	8.0	37	14
750	38	43	15	2.7	PE521_0040 EZ503U	167	345	4.000	4/1	2600	5000	8.6	8.0	37	14

n_{2N} [rpm]	M_{2N} [Nm]	$M_{2,0}$ [Nm]	a_{th}	S	Type	M_{2acc} [Nm]	M_{2NOT} [Nm]	i	i_{exakt}	n_{1maxDB} [rpm]	n_{1maxZB} [rpm]	J_1 [kgcm²]	$\Delta\varphi_2$ [arcmin]	C_2 [Nm/ arcmin]	m [kg]
PE5 (n_{1N} = 3000 min^{-1}, $M_{2acc,max}$ = 250 Nm)															
750	47	56	18	2.2	PE521_0040 EZ702U	159	500	4.000	4/1	2600	5000	15	8.0	37	17
750	52	62	20	2.0	PE521_0040 EZ505U	250	345	4.000	4/1	2600	5000	13	8.0	37	17
750	64	81	25	1.6	PE521_0040 EZ703U	250	500	4.000	4/1	2600	5000	23	8.0	37	19
750	83	117	32	1.2	PE521_0040 EZ705U	250	500	4.000	4/1	2600	5000	35	8.0	37	24
1000	22	23	23	3.3	PE521_0030 EZ502U	90	259	3.000	3/1	2500	4500	7.1	8.0	33	12
1000	22	24	23	3.3	PE521_0030 EZ701U	58	360	3.000	3/1	2500	4500	10	8.0	33	14
1000	28	32	30	2.5	PE521_0030 EZ503U	125	259	3.000	3/1	2500	4500	9.5	8.0	33	14
1000	35	42	37	2.0	PE521_0030 EZ702U	119	360	3.000	3/1	2500	4500	16	8.0	33	17
1000	39	47	42	1.8	PE521_0030 EZ505U	180	259	3.000	3/1	2500	4500	14	8.0	33	17
1000	48	61	51	1.5	PE521_0030 EZ703U	180	360	3.000	3/1	2500	4500	24	8.0	33	19
1000	62	88	66	1.2	PE521_0030 EZ705U	180	360	3.000	3/1	2500	4500	36	8.0	33	24
PE5 (n_{1N} = 4500 min^{-1}, $M_{2acc,max}$ = 250 Nm)															
643	65	104	8.4	1.4	PE521_0070 EZ505U	250	500	7.000	7/1	2800	5000	12	8.0	32	17
643	82	136	11	1.1	PE521_0070 EZ703U	250	500	7.000	7/1	2800	5000	22	8.0	32	19
900	46	74	13	2.0	PE521_0050 EZ505U	250	432	5.000	5/1	2600	5000	13	8.0	36	17
900	59	97	16	1.5	PE521_0050 EZ703U	250	500	5.000	5/1	2600	5000	22	8.0	36	19
900	80	146	22	1.1	PE521_0050 EZ705U	250	500	5.000	5/1	2600	5000	35	8.0	36	24
1125	37	59	16	2.4	PE521_0040 EZ505U	250	345	4.000	4/1	2600	5000	13	8.0	37	17
1125	47	78	21	1.9	PE521_0040 EZ703U	250	500	4.000	4/1	2600	5000	23	8.0	37	19
1125	64	116	28	1.4	PE521_0040 EZ705U	250	500	4.000	4/1	2600	5000	35	8.0	37	24
1500	28	45	34	2.3	PE521_0030 EZ505U	180	259	3.000	3/1	2500	4500	14	8.0	33	17
1500	35	58	43	1.8	PE521_0030 EZ703U	180	360	3.000	3/1	2500	4500	24	8.0	33	19
1500	48	87	58	1.3	PE521_0030 EZ705U	180	360	3.000	3/1	2500	4500	36	8.0	33	24
PE5 (n_{1N} = 6000 min^{-1}, $M_{2acc,max}$ = 250 Nm)															
150	87	106	2.1	1.2	PE522_0400 EZ401U	240	480	40.00	40/1	3600	6000	0.99	10.0	33	12
171	76	93	2.2	1.3	PE522_0350 EZ401U	250	500	35.00	35/1	3600	6000	1.0	10.0	33	12
214	61	74	2.5	1.6	PE522_0280 EZ401U	226	480	28.00	28/1	3600	6000	1.0	10.0	33	12
214	90	117	3.6	1.1	PE522_0280 EZ501U	240	480	28.00	28/1	3600	6000	3.0	10.0	33	13
214	93	130	3.7	1.1	PE522_0280 EZ402U	240	480	28.00	28/1	3600	6000	1.7	10.0	33	13
240	55	67	2.6	1.8	PE522_0250 EZ401U	202	500	25.00	25/1	3400	6000	1.1	10.0	33	12
240	81	105	3.8	1.2	PE522_0250 EZ501U	250	500	25.00	25/1	3400	6000	3.1	10.0	33	13
240	83	116	4.0	1.2	PE522_0250 EZ402U	250	500	25.00	25/1	3400	6000	1.8	10.0	33	13
300	44	53	2.9	2.3	PE522_0200 EZ401U	162	500	20.00	20/1	3400	6000	1.3	10.0	33	12
300	65	84	4.3	1.6	PE522_0200 EZ501U	250	500	20.00	20/1	3400	6000	3.2	10.0	33	13
300	67	93	4.4	1.5	PE522_0200 EZ402U	250	500	20.00	20/1	3400	6000	2.0	10.0	33	13
300	99	148	6.6	1.0	PE522_0200 EZ502U	250	500	20.00	20/1	3400	6000	5.5	10.0	33	15
375	35	43	3.3	2.9	PE522_0160 EZ401U	129	480	16.00	16/1	3400	6000	1.3	10.0	33	12
375	52	67	4.8	2.0	PE522_0160 EZ501U	240	480	16.00	16/1	3400	6000	3.3	10.0	33	13
375	53	74	4.9	1.9	PE522_0160 EZ402U	240	480	16.00	16/1	3400	6000	2.0	10.0	33	13
375	79	119	7.4	1.3	PE522_0160 EZ502U	240	480	16.00	16/1	3400	6000	5.6	10.0	33	15
375	88	128	8.2	1.1	PE522_0160 EZ404U	240	480	16.00	16/1	3400	6000	3.3	10.0	33	15
375	94	161	8.8	1.1	PE522_0160 EZ503U	240	480	16.00	16/1	3400	6000	7.9	10.0	33	16

6.3 Dimensional drawings

In this chapter you can find the dimensions of the geared motors.

There is a dimensional drawing for every possible shaft/housing design, each with the tables for gearbox dimensions, motor dimensions and geared motor dimensions.

Dimensions can exceed the specifications of ISO 2768-mK due to casting tolerances or accumulation of individual tolerances.

We reserve the right to make dimensional changes due to ongoing technical development.

You can download 3D models of our standard drives at https://configurator.stoeber.de/en-US/.

Combination options and the dimensions of forced ventilated geared motors can also be found at https://configurator.stoeber.de/en-US/.

Tolerances

Solid shaft	Tolerance
Fit	ISO k6
Feather keys	DIN 6885-1, high form A
Balancing	With half feather key

Centering holes in solid shafts in accordance with DIN 332-2, DR shape

Thread size	M4	M5	M6	M8	M10	M12	M16	M20	M24
Thread depth [mm]	10	12.5	16	19	22	28	36	42	50

6.3.1 P shaft design (solid shaft with feather key)

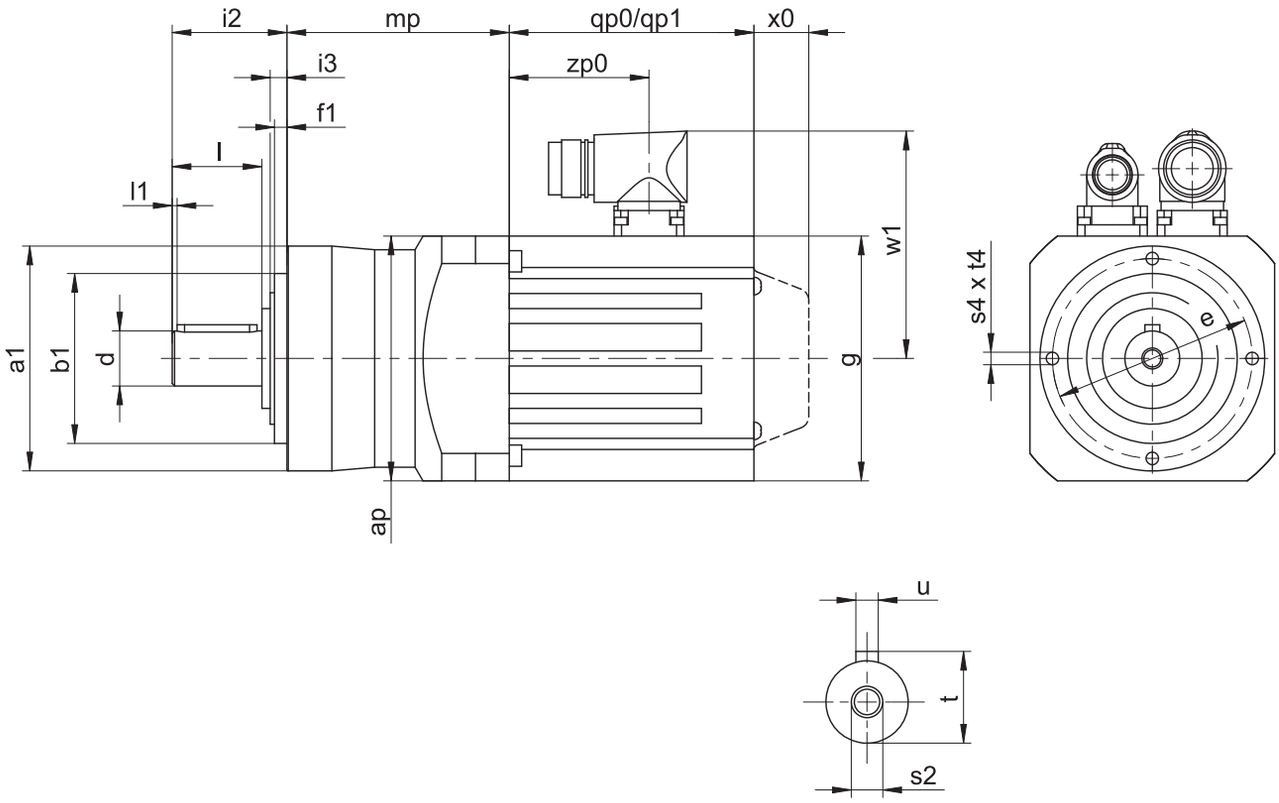

qp0	Applies to motors without brake.	qp1	Applies to motors with brake.
x0	EZ2: Applies only to motors with brake and encoders using an optical or inductive measuring method EZ3 – EZ8: Applies to encoders using an optical measuring method	w1	Different for the One Cable Solution (OCS), see the chapter [▶ 17.4]

Dimensions of gearboxes

Type	Øa1	Øb1	Ød	Øe	f1	i2	i3	l	l1	s2	s4	t	t4	u
PE221	50	35_{h6}	12_{k6}	44	4	24.5	5.0	18	2	M4	M4	13.5	8	A4×4×14
PE222	50	35_{h6}	12_{k6}	44	4	24.5	5.0	18	2	M4	M4	13.5	8	A4×4×14
PE321	70	52_{h6}	16_{k6}	62	5	36.0	6.0	28	2	M5	M5	18.0	10	A5×5×22
PE322	70	52_{h6}	16_{k6}	62	5	36.0	6.0	28	2	M5	M5	18.0	10	A5×5×22
PE421	90	68_{h6}	22_{k6}	80	5	46.0	6.5	36	2	M8	M6	24.5	12	A6×6×32
PE422	90	68_{h6}	22_{k6}	80	5	46.0	6.5	36	2	M8	M6	24.5	12	A6×6×32
PE521	120	90_{h6}	32_{k6}	108	6	70.0	8.0	58	4	M12	M8	35.0	16	A10×8×50
PE522	120	90_{h6}	32_{k6}	108	6	70.0	8.0	58	4	M12	M8	35.0	16	A10×8×50

Dimensions of motors

Type	□g	qp0	qp1	w1	x0	zp0
EZ202U	55	141	150.0	47.0	25	86.0
EZ203U	55	159	168.0	47.0	25	104.0
EZ301U	72	90	130.0	55.5	21	54.5
EZ302U	72	112	152.0	55.5	21	76.5
EZ303U	72	134	174.0	55.5	21	98.5
EZ401U	98	98	146.5	91.0	22	56.0
EZ402U	98	123	171.5	91.0	22	81.0
EZ404U	98	173	221.5	91.0	22	131.0
EZ501U	115	93	147.5	100.0	22	58.5
EZ502U	115	118	172.5	100.0	22	83.5
EZ503U	115	143	197.5	100.0	22	108.5
EZ505U	115	193	247.5	100.0	22	158.5
EZ701U	145	102	161.0	115.0	22	64.0
EZ702U	145	127	186.0	115.0	22	89.0
EZ703U	145	152	211.0	115.0	22	114.0
EZ705U	145	207	266.0	134.0	22	165.0

Dimensions of geared motors

Type	EZ2		EZ3		EZ4		EZ5		EZ7	
	ap	mp	ap	mp	ap	mp	ap	mp	ap	mp
PE221	□55	59.5	□72	73.0	–	–	–	–	–	–
PE222	□55	91.5	–	–	–	–	–	–	–	–
PE321	–	–	□72	86.5	□98	83.0	–	–	–	–
PE322	∅75	106.5	∅75	120.0	–	–	–	–	–	–
PE421	–	–	–	–	□98	89.0	□115	91.5	–	–
PE422	–	–	∅100	129.0	∅100	125.5	–	–	–	–
PE521	–	–	–	–	–	–	∅120	110.0	□145	113.0
PE522	–	–	–	–	∅120	152.0	∅120	151.5	–	–

6.4 Type designation

In this chapter, you can find an explanation of the type designation with the associated options.

Additional ordering information not included in the type designation can be found at the end of the chapter.

Example code

PE	4	2	2	S	P	S	S	0200	EZ401U

Explanation

Code	Designation	Design
PE	Type	Planetary gearbox
4	Size	4 (example)
2	Generation	Generation 2
1	Stages	Single-stage
2		Two-stage
S	Housing	Standard
P	Shaft	Solid shaft with feather key
S	Bearing	Standard bearing
S	Backlash	Standard
0200	Transmission ratio (i x 10)	i = 20 (example)
EZ401U	Motor	EZ synchronous servo motor

To complete the type designation, also specify the following in your order:

- A detailed type designation of the motor, see the chapter [▷ 17.5]

To make selecting your geared motor easy, use our STOBER Configurator at https://configurator.stoeber.de/en-US/.

You can find a detailed description of the nameplate in the chapter [▷ 17.5.1].

6.5 Product description

6.5.1 Input options

EZ synchronous servo motor

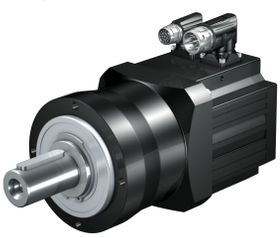

Catalog ID 442437_en

LM Lean motor



Catalog ID 443016_en

The corresponding catalogs can be found at http://www.stoeber.de/en/downloads/

Enter the ID of the catalog in the Search term field.

6.5.2 Installation conditions

The specified torques and forces only apply when gearboxes are fastened on the machine side using screws of strength class 10.9. In addition, the gear housings must be adjusted at the pilot. The machine-side fit must be H7.

6.5.3 Lubricants

STOBER fills the gearboxes with the amount and type of lubricant specified on the nameplate.

You will receive lubricants for use in the food industry upon request.

6.5.4 Other product features

Feature	Value
Max. permitted gearbox temperature (on the surface of the gearbox)	≤ 80 °C
Paint	Black RAL 9005
Explosion-proof design in accordance with (ATEX) Directive 2014/34/EU (optional)	Not available
Efficiency:	
η_{get} single-stage	97%
η_{get} two-stage	95%
Protection class:[1]	
Gearbox	IP64
Motor	IP56, optionally IP66

6.5.5 Direction of rotation

The input and output rotate in the same direction.

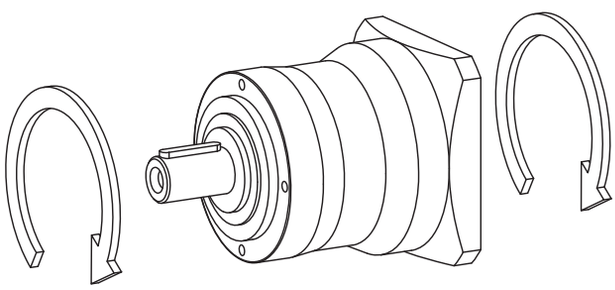

6.6 Project configuration

Project your drives using our SERVOsoft designing software. Download SERVOsoft free of charge after registration at https://www.stoeber.de/en/services/info-servosoft/.

It is the most convenient and reliable method of drive selection, as the entire torque/speed curve of the application is displayed and evaluated here in the curve of the geared motor.

In this chapter, only limit values for specific operating points can be taken into consideration for manual drive selection.

An explanation of the formula symbols can be found in Chapter [▷ 20.1].

The formula symbols for values actually present in the application are marked with *.

[1] Observe the protection class of all the components.

6.6.1 Drive selection

Drive selection for gearboxes

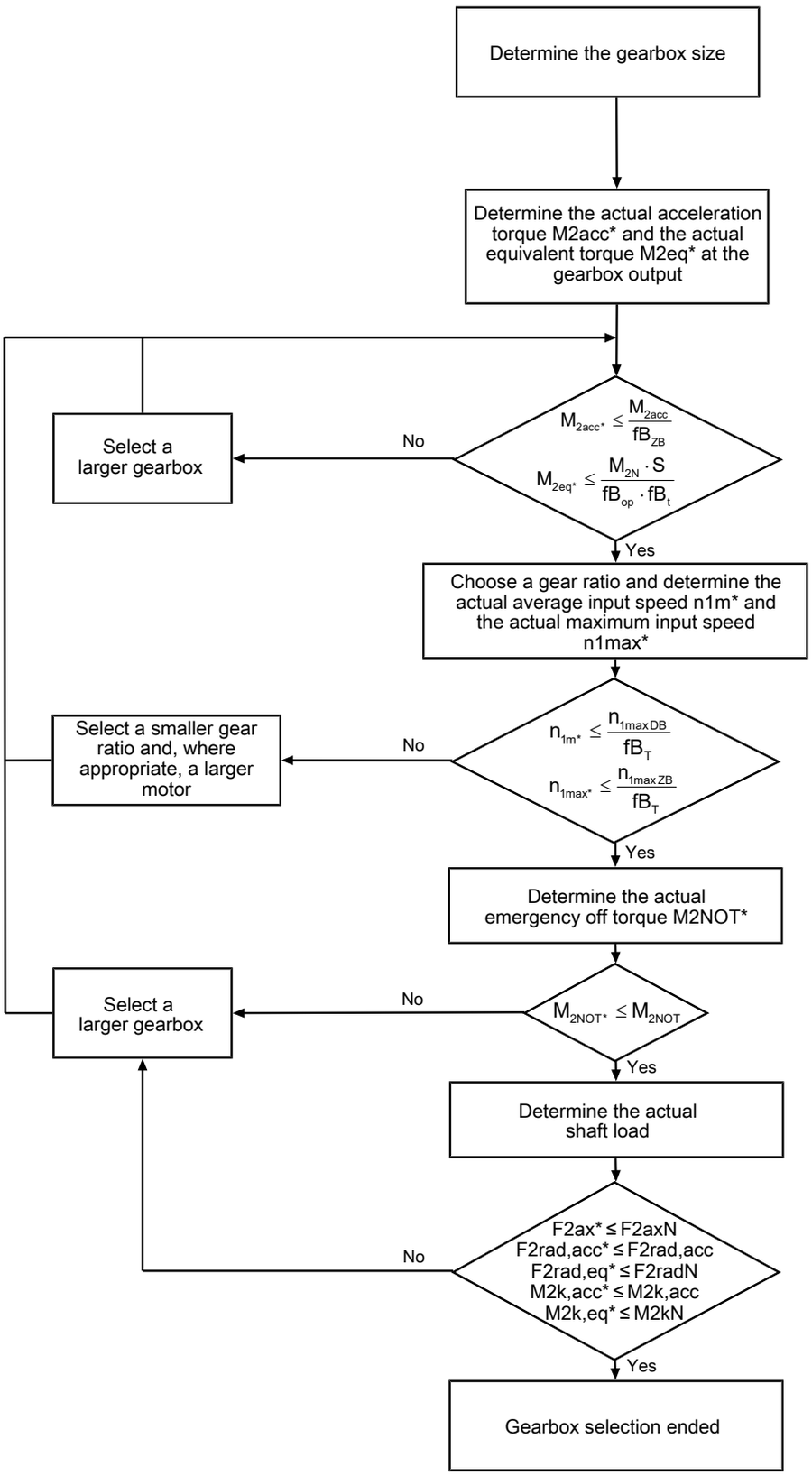

Calculate the forces and tilting torques in the chapter Permitted shaft loads.

Refer to the selection tables for the values for i, n_{1maxDB}, n_{1maxZB}, M_{2acc}, M_{2NOT}, M_{2N} and S.

The values for fB_T, fB_{op}, fB_t and fB_{ZB} can be found in the corresponding tables in this chapter.

Drive selection for motors

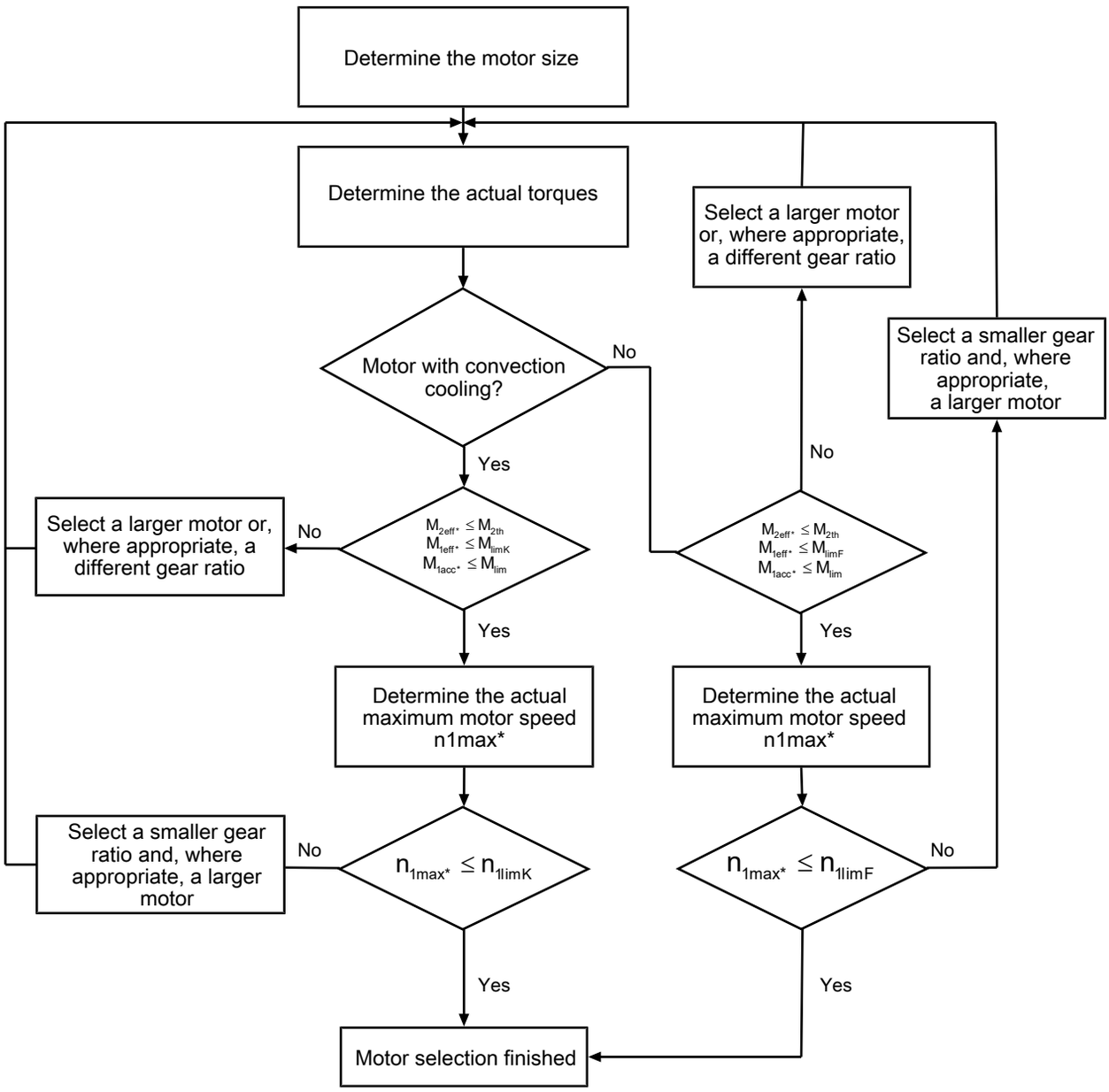

The value for M_{lim}, M_{limK}, M_{limF}, n_{1limK} and n_{1limF} can be found in the motor characteristic curve in the chapter [▷ 17.3]. Note the size, nominal speed n_N and cooling type of the motor.

Example of cyclic operation

The following calculations are based on a representation of the power taken from the output based in accordance with the following example:

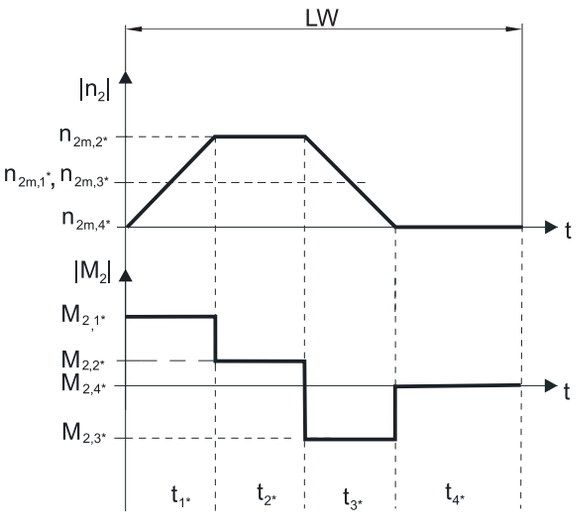

Calculation of the actual maximum acceleration torques

$$M_{2acc*} = J_{tot} \cdot \frac{\Delta n_2}{9{,}55 \cdot \Delta t} + M_{L*}$$

$$M_{1acc*} = \frac{M_{2acc*}}{i \cdot \eta_{get}} + J_1 \cdot \frac{\Delta n_1}{9{,}55 \cdot \Delta t}$$

Calculation of the actual average input speed

$$n_{1m*} = n_{2m*} \cdot i$$

$$n_{2m*} = \frac{\left|n_{2m,1*}\right| \cdot t_{1*} + \ldots + \left|n_{2m,n*}\right| \cdot t_{n*}}{t_{1*} + \ldots + t_{n*}}$$

If $t_{1*} + \ldots + t_{3*} \geq 6$ min, calculate n_{2m*} without the rest phase t_{4*}.

The values for the ratio i can be found in the selection tables.

Calculation of the actual effective torque

$$M_{2eff*} = \sqrt{\frac{t_{1*} \cdot M_{2,1*}{}^2 + \ldots + t_{n*} \cdot M_{2,n*}{}^2}{t_{1*} + \ldots + t_{n*}}}$$

Calculation of the actual emergency off torque

$$M_{2NOT*} = J_{tot} \cdot \frac{\Delta n_2}{9.55 \cdot \Delta t} + M_{L*}$$

Calculation of the actual equivalent torque

$$M_{2eq*} = \sqrt[3]{\frac{\left|n_{2m,1*}\right| \cdot t_{1*} \cdot \left|M_{2,1*}{}^3\right| + \ldots + \left|n_{2m,n*}\right| \cdot t_{n*} \cdot \left|M_{2,n*}{}^3\right|}{\left|n_{2m,1*}\right| \cdot t_{1*} + \ldots + \left|n_{2m,n*}\right| \cdot t_{n*}}}$$

Calculation of the thermal limit torque

Calculate the thermal limit torque M_{2th} for a duty cycle $ED_{10} > 50\%$ and the actual average input speed n_{1m*}. (At $K_{mot,th} \leq 0$ you must reduce the average input speed n_{1m*} accordingly or select another geared motor size.)

$$M_{2th} = M_{op} \cdot i \cdot K_{mot,th}$$

$$K_{mot,th} = 0{,}95 - \frac{a_{th}}{1000} \cdot fB_T \cdot \left(\frac{n_{1m*}}{1000}\right)^3$$

Refer to the selection tables for the values of i and a_{th}.

The values for fB_T can be found in the corresponding table in this chapter.

The value for the torque of the motor at operating point M_{op} with the determined average input speed n_{1m*} can be found in the motor characteristic curve in the chapter [▶ 17.3]. Note the size, nominal speed n_N and cooling type of the motor. The figure below shows an example of reading the torque M_{op} of a motor with convection cooling at the operating point.

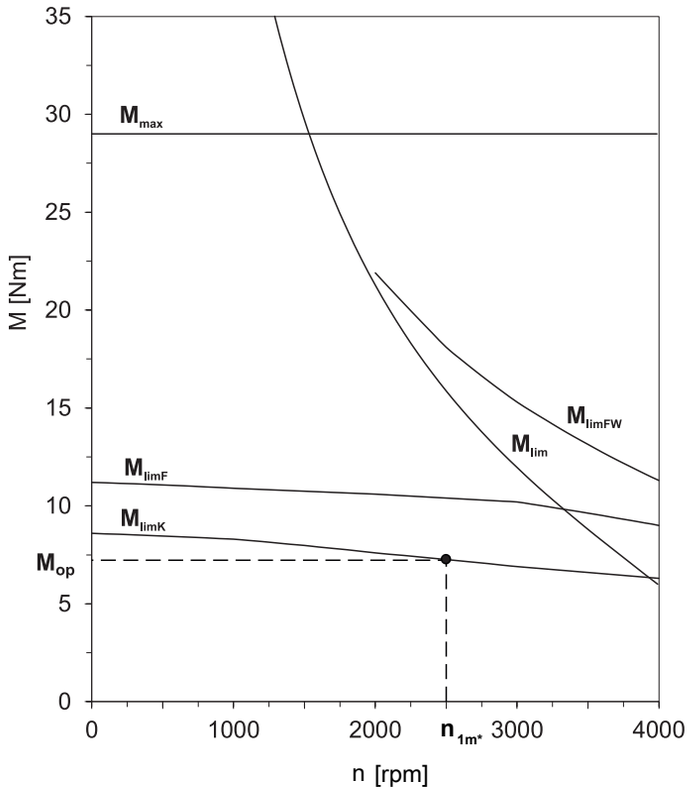

Operating factors

Operating mode	fB_{op}
Uniform continuous operation	1.00
Cyclic operation	1.00
Reversing load cyclic operation	1.00

Run time	fB_t
Daily runtime ≤ 8 h	1.00
Daily runtime ≤ 16 h	1.15
Daily runtime ≤ 24 h	1.20

Cyclic operation	fB_{ZB}
≤ 1000 load changes/hour (LW/h)	1.00
> 1000 load changes/hour (LW/h)	1.15

Temperature		fB_T
Motor cooling	**Surrounding temperature**	
Motor with forced ventilation	≤ 20 °C	0.9
	≤ 30 °C	1.0
	≤ 40 °C	1.15
Motor with convection cooling	≤ 20 °C	1.0
	≤ 30 °C	1.1
	≤ 40 °C	1.25

Notes

- The maximum permitted gearbox temperature (see the "Other product features" chapter) must not be exceeded. Doing so may result in damage to the geared motor.
- For braking from full speed (for example when the power fails or when setting up the machine), note the permitted gearbox torques (M_{2acc}, M_{2NOT}) in the selection tables.

6.6.2 Permitted shaft loads for the output shaft

The values specified in the tables apply to the permitted shaft loads:

- For shaft dimensions in accordance with the catalog
- For output speeds $n_{2m*} \leq 100$ rpm ($F^{2axN} = F_{2ax100}$; $F_{2radN} = F_{2rad100}$; $M_{2kN} = M_{2k100}$)
- Only if radial forces on the gearbox are stabilized by its pilots (housing, flange shaft)

Permitted shaft loads for standard bearing S

Type	z_2 [mm]	F_{2ax100} [N]	$F_{2rad100}$ [N]	$F_{2rad,acc}$ [N]	M_{2k100} [Nm]	$M_{2k,acc}$ [Nm]
PE2	8.0	400	800	800	13	13
PE3	11.0	800	1600	1600	40	40
PE4	13.0	1900	2400	2400	73	73
PE5	16.0	4000	4600	4600	206	206

For other output speeds, download diagrams at https://configurator.stoeber.de/en-US/.

The following applies to output speeds $n_{2m*} > 100$ rpm:

$$F_{2axN} = \frac{F_{2ax100}}{\sqrt[3]{\frac{n_{2m*}}{100\ \text{rpm}}}} \qquad F_{2radN} = \frac{F_{2rad100}}{\sqrt[3]{\frac{n_{2m*}}{100\ \text{rpm}}}} \qquad M_{2kN} = \frac{M_{2k100}}{\sqrt[3]{\frac{n_{2m*}}{100\ \text{rpm}}}}$$

The values for F_{2ax100}, $F_{2rad100}$ and M_{2k100} can be found in the table "Permitted shaft loads" in this chapter.

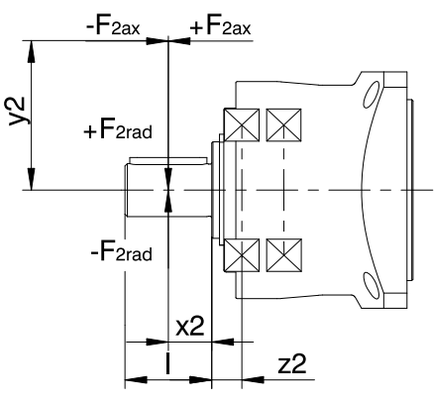

Fig. 1: Force application points

The specified values for $F_{2rad100}$ and $F_{2rad,acc}$ refer to an application of force at the center of the output shaft: $x_2 = l/2$.

Shaft dimensions can be found in the "Dimensional drawings" chapter.

The following applies to other force application points:

$$M_{2k,acc*} = \frac{2 \cdot F_{2ax*} \cdot y_2 + F_{2rad,acc*} \cdot (x_2 + z_2)}{1000}$$

For applications with multiple axial and/or radial forces, you must add the forces as vectors.

In the event of EMERGENCY OFF operation (max. 1000 load changes), you can multiply the permitted forces and torques for F_{2ax100}, $F_{2rad100}$ and M_{2k100} by a factor of two.

Also note the calculation for equivalent values:

$$M_{2k,eq*} = \sqrt[3]{\frac{|n_{2m,1*}| \cdot t_{1*} \cdot |M_{2k,acc,1*}^{\ 3}| + \ldots + |n_{2m,n*}| \cdot t_{n*} \cdot |M_{2k,acc,n*}^{\ 3}|}{|n_{2m,1*}| \cdot t_{1*} + \ldots + |n_{2m,n*}| \cdot t_{n*}}}$$

$$F_{2rad,eq*} = \sqrt[3]{\frac{|n_{2m,1*}| \cdot t_{1*} \cdot |F_{2rad,acc,1*}^{\ 3}| + \ldots + |n_{2m,n*}| \cdot t_{n*} \cdot |F_{2rad,acc,n*}^{\ 3}|}{|n_{2m,1*}| \cdot t_{1*} + \ldots + |n_{2m,n*}| \cdot t_{n*}}}$$

The following apply to the bearing service life L_{10h} ($ED_{10} \leq 40\%$):

$L_{10h} > 10000$ h with $1 < M_{2kN}/M_{2k*} < 1.25$

$L_{10h} > 20000$ h with $1.25 < M_{2kN}/M_{2k*} < 1.5$

$L_{10h} > 30000$ h with $1.5 < M_{2kN}/M_{2k*}$

For different duty cycles:

$$L_{10h} > L_{10h(ED_{10}=40\%)} \cdot \frac{40\%}{ED_{10}}$$

6.6.3 Radial shaft seal rings

Leak-proofness

Our gearboxes are equipped with high-quality radial shaft seal rings and checked for leaks. However, a leak cannot be fully ruled out over the length of use of a gearbox. If you use a gearbox with goods incompatible with the lubricant, you must take measures to prevent direct contact with the gearbox lubricant in case of a leak.

6.7 Additional documentation

Additional documentation related to the product can be found at
http://www.stoeber.de/en/downloads/

Enter the ID of the documentation in the Search term field.

Documentation	ID
Operating manual for PE22 – PE52 planetary gearboxes and planetary geared motors	443252_en
Operating manual for EZ synchronous servo motors	443032_en

7 C helical geared motors

Table of contents

7.1 Overview 128

7.2 Selection tables 129

7.3 Dimensional drawings 163

7.3.1 Solid shaft design with feather key, N housing design (foot) 164

7.3.2 Solid shaft design with feather key, G housing design (pitch circle diameter) 166

7.3.3 Solid shaft design with feather key, F housing design (round flange) 168

7.3.4 Solid shaft design with feather key, Q housing design (square flange) 170

7.3.5 Oil expansion tank 172

7.4 Type designation 173

7.5 Product description 173

7.5.1 Input options 173

7.5.2 Housing design 174

7.5.3 Shaft design 174

7.5.4 Installation conditions 174

7.5.5 Mounting positions 175

7.5.6 Lubricants 175

7.5.7 Position of the plug connectors 176

7.5.8 Other product features 176

7.5.9 Maintenance 176

7.5.10 Direction of rotation 177

7.6 Project configuration 177

7.6.1 Drive selection 178

7.6.2 Permitted shaft loads for the output shaft 182

7.6.3 Radial shaft seal rings 183

7.6.4 Oil expansion tank 183

7.7 Additional documentation 183

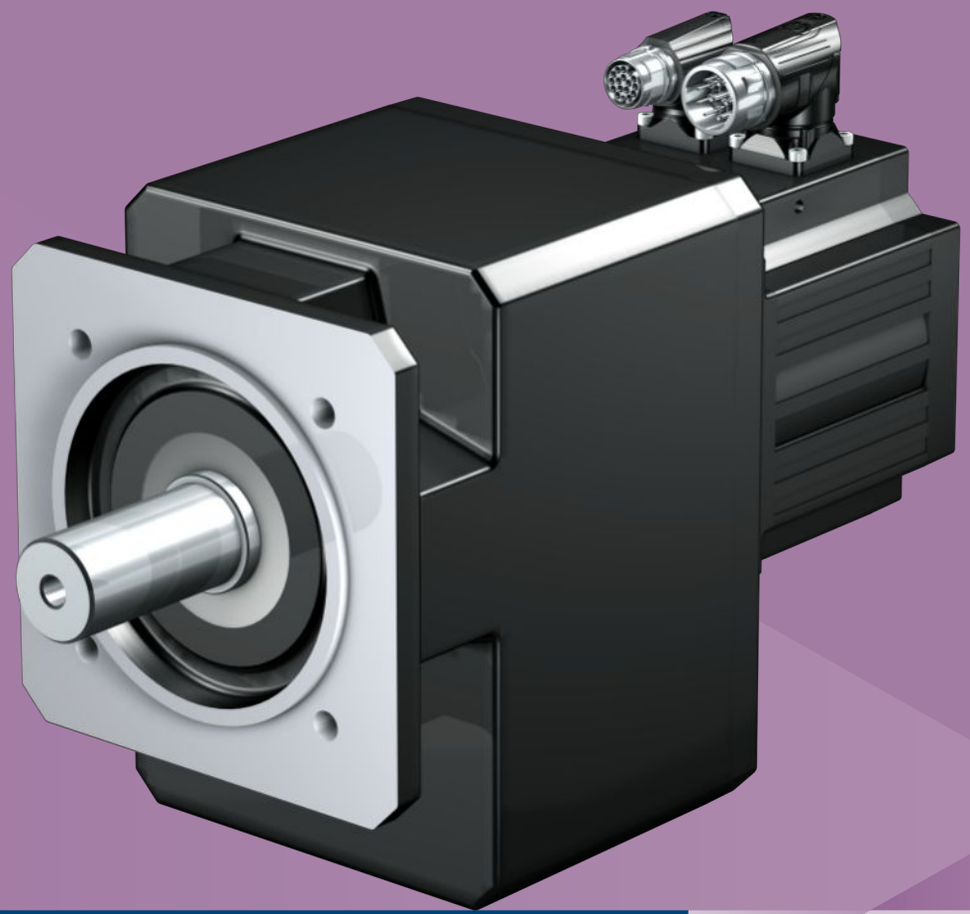

7 Helical geared motors

C

7.1 Overview

Compact helical geared motors

Features

Power density	★☆☆☆☆
Backlash	★★☆☆☆
Price category	€
Shaft load	★★☆☆☆
Smooth operation	★★★☆☆
Torsional stiffness	★★☆☆☆
Mass moment of inertia	★★★★★
Helical gearing	✓
Maintenance-free (C0 – C5)	✓
FKM seal ring at the input	✓
Reinforced output bearing	✓ (on request)
Compact and highly dynamic due to direct motor attachment	✓

Key ★☆☆☆☆ good | ★★★★★ excellent
€ Economy | €€€€€ Premium

Technical data

i	2 – 270
M_{2acc}	9.7 – 6500 Nm
$\Delta\phi_2$	10 – 20 arcmin
η_{get}	96 – 97 %

7.2 Selection tables

The technical data specified in the selection tables applies to:

- Installation altitudes up to 1000 m above sea level
- Surrounding temperatures from 0 °C to 40 °C
- Drives with convection-cooled motors (e.g. EZ401**U**)
- Weight specification for mounting position EL1, housing design N

For the technical data on drives with forced ventilated motors (e.g. EZ401**B**), refer to https://configurator.stoeber.de/en-US/.

An explanation of the formula symbols can be found in Chapter [▷ 20.1].

n_{2N} [rpm]	M_{2N} [Nm]	$M_{2,0}$ [Nm]	a_{th}	S	Type	M_{2acc} [Nm]	M_{2NOT} [Nm]	i	i_{exakt}	n_{1maxDB} EL1,2,3,4 [rpm]	n_{1maxDB} EL5,6 [rpm]	n_{1maxZB} [rpm]	J_1 [kgcm²]	$\Delta\varphi_2$ [arcmin]	C_2 [Nm/arcmin]	m [kg]
C0 (n_{1N} = 3000 min^{-1}, $M_{2acc,max}$ = 72 Nm)																
48	56	57	2.1	1.1	C002_0620 EZ301U	72	120	62.35	1247/20	4000	4000	7000	0.20	16.0	1.6	7.5
54	50	52	2.0	1.2	C002_0560 EZ301U	65	120	55.97	2015/36	4000	4000	7000	0.21	16.0	1.6	7.5
60	45	46	1.9	1.3	C002_0500 EZ301U	72	120	49.94	899/18	4000	4000	7000	0.21	16.0	1.6	7.5
64	42	43	1.9	1.4	C002_0470 EZ301U	65	120	46.82	7865/168	4000	4000	7000	0.21	16.0	1.6	7.5
72	38	38	1.7	1.6	C002_0420 EZ301U	72	120	41.77	3509/84	4000	4000	7000	0.21	16.0	1.6	7.5
86	32	32	1.6	1.9	C002_0350 EZ301U	65	120	35.03	1261/36	4000	4000	7000	0.23	16.0	1.6	7.5
86	54	57	2.7	1.1	C002_0350 EZ302U	65	120	35.03	1261/36	4000	4000	7000	0.33	16.0	1.6	8.1
96	28	29	1.5	2.1	C002_0310 EZ301U	72	120	31.26	2813/90	4000	4000	7000	0.23	16.0	1.6	7.5
96	48	51	2.6	1.2	C002_0310 EZ302U	72	120	31.26	2813/90	4000	4000	7000	0.33	16.0	1.6	8.1
107	25	26	1.4	2.4	C002_0280 EZ301U	65	120	27.99	2015/72	4000	4000	7000	0.25	16.0	1.6	7.5
107	43	46	2.4	1.4	C002_0280 EZ302U	65	120	27.99	2015/72	4000	4000	7000	0.35	16.0	1.6	8.1
107	56	59	3.2	1.1	C002_0280 EZ303U	65	120	27.99	2015/72	4000	4000	7000	0.46	16.0	1.6	8.6
120	23	23	1.4	2.7	C002_0250 EZ301U	68	120	24.97	899/36	4000	4000	7000	0.25	16.0	1.6	7.5
120	39	41	2.3	1.6	C002_0250 EZ302U	72	120	24.97	899/36	4000	4000	7000	0.35	16.0	1.6	8.1
120	50	53	3.0	1.2	C002_0250 EZ303U	72	120	24.97	899/36	4000	4000	7000	0.46	16.0	1.6	8.6
129	21	21	1.3	2.9	C002_0230 EZ301U	63	120	23.21	325/14	4000	4000	7000	0.27	16.0	1.6	7.5
129	36	38	2.2	1.7	C002_0230 EZ302U	65	120	23.21	325/14	4000	4000	7000	0.37	16.0	1.6	8.1
129	47	49	2.9	1.3	C002_0230 EZ303U	65	120	23.21	325/14	4000	4000	7000	0.48	16.0	1.6	8.6
145	19	19	1.2	3.2	C002_0210 EZ301U	56	120	20.71	145/7	4000	4000	7000	0.27	16.0	1.6	7.5
145	32	34	2.1	1.9	C002_0210 EZ302U	72	120	20.71	145/7	4000	4000	7000	0.37	16.0	1.6	8.1
145	42	44	2.7	1.4	C002_0210 EZ303U	72	120	20.71	145/7	4000	4000	7000	0.48	16.0	1.6	8.6
145	56	60	3.7	1.1	C002_0210 EZ401U	72	120	20.71	145/7	4000	4000	7000	1.0	16.0	1.6	10
171	16	16	1.1	3.8	C002_0175 EZ301U	48	120	17.53	3575/204	4000	4000	6500	0.31	16.0	1.6	7.5
171	27	29	1.9	2.2	C002_0175 EZ302U	65	120	17.53	3575/204	4000	4000	6500	0.41	16.0	1.6	8.1
171	35	37	2.5	1.7	C002_0175 EZ303U	65	120	17.53	3575/204	4000	4000	6500	0.52	16.0	1.6	8.6
171	48	51	3.4	1.3	C002_0175 EZ401U	65	120	17.53	3575/204	4000	4000	6500	1.0	16.0	1.6	10
192	14	14	1.1	4.3	C002_0155 EZ301U	42	114	15.64	1595/102	4000	4000	6500	0.31	16.0	1.6	7.5
192	24	25	1.8	2.5	C002_0155 EZ302U	72	114	15.64	1595/102	4000	4000	6500	0.41	16.0	1.6	8.1
192	31	33	2.4	1.9	C002_0155 EZ303U	72	114	15.64	1595/102	4000	4000	6500	0.52	16.0	1.6	8.6
192	42	46	3.2	1.4	C002_0155 EZ401U	72	120	15.64	1595/102	4000	4000	6500	1.0	16.0	1.6	10
213	13	13	1.0	4.7	C002_0140 EZ301U	38	102	14.08	169/12	4000	4000	6500	0.35	16.0	1.6	7.5
213	22	23	1.7	2.8	C002_0140 EZ302U	65	102	14.08	169/12	4000	4000	6500	0.45	16.0	1.6	8.1
213	28	30	2.3	2.1	C002_0140 EZ303U	65	102	14.08	169/12	4000	4000	6500	0.56	16.0	1.6	8.6
213	38	41	3.1	1.6	C002_0140 EZ401U	65	120	14.08	169/12	4000	4000	6500	1.1	16.0	1.6	10
213	59	64	4.7	1.0	C002_0140 EZ501U	65	120	14.08	169/12	4000	4000	6500	3.1	16.0	1.6	11
239	19	20	1.6	3.1	C002_0125 EZ302U	61	91	12.57	377/30	4000	4000	6500	0.45	16.0	1.6	8.1
239	25	27	2.1	2.4	C002_0125 EZ303U	72	91	12.57	377/30	4000	4000	6500	0.56	16.0	1.6	8.6
239	34	37	2.9	1.8	C002_0125 EZ401U	72	120	12.57	377/30	4000	4000	6500	1.1	16.0	1.6	10
239	52	57	4.4	1.1	C002_0125 EZ501U	72	120	12.57	377/30	4000	4000	6500	3.1	16.0	1.6	11
239	57	63	4.9	1.0	C002_0125 EZ402U	72	120	12.57	377/30	4000	4000	6500	1.8	16.0	1.6	11
260	18	19	1.6	3.3	C002_0115 EZ302U	56	84	11.54	3185/276	3700	3600	6000	0.49	16.0	1.6	8.1
260	23	25	2.1	2.5	C002_0115 EZ303U	65	84	11.54	3185/276	3700	3600	6000	0.60	16.0	1.6	8.6
260	31	34	2.9	1.9	C002_0115 EZ401U	65	120	11.54	3185/276	3700	3600	6000	1.1	16.0	1.6	10
260	48	53	4.4	1.2	C002_0115 EZ501U	65	120	11.54	3185/276	3700	3600	6000	3.1	16.0	1.6	11
260	53	58	4.8	1.1	C002_0115 EZ402U	65	120	11.54	3185/276	3700	3600	6000	1.8	16.0	1.6	11
291	16	17	1.6	3.5	C002_0105 EZ302U	50	75	10.30	1421/138	3700	3600	6000	0.49	16.0	1.6	8.1
291	21	22	2.1	2.7	C002_0105 EZ303U	60	75	10.30	1421/138	3700	3600	6000	0.60	16.0	1.6	8.6
291	28	30	2.8	2.0	C002_0105 EZ401U	72	120	10.30	1421/138	3700	3600	6000	1.1	16.0	1.6	10
291	43	47	4.3	1.3	C002_0105 EZ501U	72	120	10.30	1421/138	3700	3600	6000	3.1	16.0	1.6	11
291	47	52	4.7	1.2	C002_0105 EZ402U	72	120	10.30	1421/138	3700	3600	6000	1.8	16.0	1.6	11
325	14	15	1.6	3.8	C002_0092 EZ302U	45	67	9.228	1495/162	3700	3600	6000	0.56	16.0	1.6	8.1

n_{2N} [rpm]	M_{2N} [Nm]	$M_{2,0}$ [Nm]	a_{th}	S	Type	M_{2acc} [Nm]	M_{2NOT} [Nm]	i	i_{exakt}	n_{1maxDB} EL1,2,3,4 [rpm]	n_{1maxDB} EL5,6 [rpm]	n_{1maxZB} [rpm]	J_1 [kgcm²]	$\Delta\varphi_2$ [arcmin]	C_2 [Nm/arcmin]	m [kg]
C0 (n_{1N} = 3000 min^{-1}, $M_{2acc,max}$ = 72 Nm)																
325	19	20	2.0	2.9	C002_0092 EZ303U	54	67	9.228	1495/162	3700	3600	6000	0.67	16.0	1.6	8.6
325	25	27	2.7	2.2	C002_0092 EZ401U	65	120	9.228	1495/162	3700	3600	6000	1.2	16.0	1.6	10
325	38	42	4.2	1.4	C002_0092 EZ501U	65	120	9.228	1495/162	3700	3600	6000	3.2	16.0	1.6	11
325	42	47	4.6	1.3	C002_0092 EZ402U	65	120	9.228	1495/162	3700	3600	6000	1.9	16.0	1.6	11
364	13	13	1.7	3.8	C002_0082 EZ302U	40	60	8.235	667/81	3700	3600	6000	0.56	16.0	1.6	8.1
364	17	17	2.2	2.9	C002_0082 EZ303U	48	60	8.235	667/81	3700	3600	6000	0.67	16.0	1.6	8.6
364	22	24	2.7	2.3	C002_0082 EZ401U	68	120	8.235	667/81	3700	3600	6000	1.2	16.0	1.6	10
364	34	38	4.1	1.5	C002_0082 EZ501U	72	120	8.235	667/81	3700	3600	6000	3.2	16.0	1.6	11
364	38	42	4.5	1.4	C002_0082 EZ402U	72	120	8.235	667/81	3700	3600	6000	1.9	16.0	1.6	11
389	12	13	1.8	3.5	C002_0077 EZ302U	37	53	7.714	54/7	4000	4000	7000	0.38	20.0	1.3	8.1
389	15	16	2.4	2.7	C002_0077 EZ303U	42	53	7.714	54/7	4000	4000	7000	0.49	20.0	1.3	8.6
389	21	22	3.1	2.1	C002_0077 EZ401U	64	110	7.714	54/7	4000	4000	7000	1.0	20.0	1.3	10
389	32	35	4.8	1.3	C002_0077 EZ501U	65	110	7.714	54/7	4000	4000	7000	3.0	20.0	1.3	11
389	35	39	5.3	1.2	C002_0077 EZ402U	65	110	7.714	54/7	4000	4000	7000	1.7	20.0	1.3	11
476	9.7	10	1.9	3.8	C002_0063 EZ302U	31	46	6.300	2035/323	4000	4000	6500	0.43	20.0	1.3	8.1
476	13	13	2.5	2.9	C002_0063 EZ303U	37	46	6.300	2035/323	4000	4000	6500	0.54	20.0	1.3	8.6
476	17	18	3.0	2.4	C002_0063 EZ401U	52	110	6.300	2035/323	4000	4000	6500	1.1	20.0	1.3	10
476	26	29	4.7	1.5	C002_0063 EZ501U	65	110	6.300	2035/323	4000	4000	6500	3.0	20.0	1.3	11
476	29	32	5.1	1.4	C002_0063 EZ402U	65	110	6.300	2035/323	4000	4000	6500	1.8	20.0	1.3	11
515	9.0	9.5	2.0	3.8	C002_0058 EZ302U	28	42	5.824	99/17	4000	4000	6500	0.43	20.0	1.3	8.1
515	12	12	2.6	2.9	C002_0058 EZ303U	34	42	5.824	99/17	4000	4000	6500	0.54	20.0	1.3	8.6
515	16	17	3.0	2.5	C002_0058 EZ401U	48	110	5.824	99/17	4000	4000	6500	1.1	20.0	1.3	10
515	24	27	4.6	1.6	C002_0058 EZ501U	65	110	5.824	99/17	4000	4000	6500	3.0	20.0	1.3	11
515	27	29	5.0	1.5	C002_0058 EZ402U	65	110	5.824	99/17	4000	4000	6500	1.8	20.0	1.3	11
515	39	49	7.4	1.0	C002_0058 EZ404U	65	110	5.824	99/17	4000	4000	6500	3.1	20.0	1.3	13
593	7.8	8.3	2.1	3.8	C002_0051 EZ302U	25	37	5.063	481/95	4000	4000	6500	0.48	20.0	1.3	8.1
593	10	11	2.8	2.9	C002_0051 EZ303U	29	37	5.063	481/95	4000	4000	6500	0.59	20.0	1.3	8.6
593	14	15	2.9	2.7	C002_0051 EZ401U	42	110	5.063	481/95	4000	4000	6500	1.1	20.0	1.3	10
593	21	23	4.5	1.8	C002_0051 EZ501U	65	110	5.063	481/95	4000	4000	6500	3.1	20.0	1.3	11
593	23	26	4.9	1.6	C002_0051 EZ402U	65	110	5.063	481/95	4000	4000	6500	1.8	20.0	1.3	11
593	34	42	7.2	1.1	C002_0051 EZ404U	65	110	5.063	481/95	4000	4000	6500	3.2	20.0	1.3	13
593	36	39	7.8	1.0	C002_0051 EZ502U	65	110	5.063	481/95	4000	4000	6500	5.4	20.0	1.3	13
593	36	41	7.8	1.0	C002_0051 EZ701U	65	110	5.063	481/95	4000	4000	6500	8.7	20.0	1.3	14
641	7.2	7.6	2.2	3.8	C002_0047 EZ302U	23	34	4.680	117/25	4000	4000	6500	0.49	20.0	1.3	8.1
641	9.4	9.9	2.9	2.9	C002_0047 EZ303U	27	34	4.680	117/25	4000	4000	6500	0.60	20.0	1.3	8.6
641	13	14	2.9	2.9	C002_0047 EZ401U	39	110	4.680	117/25	4000	4000	6500	1.1	20.0	1.3	10
641	20	21	4.5	1.9	C002_0047 EZ501U	65	110	4.680	117/25	4000	4000	6500	3.1	20.0	1.3	11
641	21	24	4.9	1.7	C002_0047 EZ402U	65	110	4.680	117/25	4000	4000	6500	1.8	20.0	1.3	11
641	31	39	7.1	1.2	C002_0047 EZ404U	65	110	4.680	117/25	4000	4000	6500	3.2	20.0	1.3	13
641	34	36	7.7	1.1	C002_0047 EZ502U	65	110	4.680	117/25	4000	4000	6500	5.4	20.0	1.3	13
641	34	38	7.7	1.1	C002_0047 EZ701U	65	110	4.680	117/25	4000	4000	6500	8.7	20.0	1.3	14
723	6.4	6.8	2.3	3.8	C002_0041 EZ302U	20	30	4.149	1813/437	3700	3600	6000	0.55	20.0	1.3	8.1
723	8.3	8.8	3.0	2.9	C002_0041 EZ303U	24	30	4.149	1813/437	3700	3600	6000	0.66	20.0	1.3	8.6
723	11	12	2.8	3.1	C002_0041 EZ401U	34	110	4.149	1813/437	3700	3600	6000	1.2	20.0	1.3	10
723	17	19	4.4	2.0	C002_0041 EZ501U	64	110	4.149	1813/437	3700	3600	6000	3.2	20.0	1.3	11
723	19	21	4.8	1.9	C002_0041 EZ402U	64	110	4.149	1813/437	3700	3600	6000	1.9	20.0	1.3	11
723	28	35	7.0	1.3	C002_0041 EZ404U	65	110	4.149	1813/437	3700	3600	6000	3.2	20.0	1.3	13
723	30	32	7.5	1.2	C002_0041 EZ502U	65	110	4.149	1813/437	3700	3600	6000	5.5	20.0	1.3	13
723	30	33	7.5	1.2	C002_0041 EZ701U	65	110	4.149	1813/437	3700	3600	6000	8.8	20.0	1.3	14
782	5.9	6.3	2.4	3.8	C002_0038 EZ302U	19	28	3.835	441/115	3700	3600	6000	0.55	20.0	1.3	8.1
782	7.7	8.1	3.2	2.9	C002_0038 EZ303U	22	28	3.835	441/115	3700	3600	6000	0.66	20.0	1.3	8.6
782	10	11	2.8	3.3	C002_0038 EZ401U	32	110	3.835	441/115	3700	3600	6000	1.2	20.0	1.3	10
782	16	17	4.3	2.1	C002_0038 EZ501U	60	110	3.835	441/115	3700	3600	6000	3.2	20.0	1.3	11
782	17	19	4.7	2.0	C002_0038 EZ402U	60	110	3.835	441/115	3700	3600	6000	1.9	20.0	1.3	11
782	26	32	6.9	1.3	C002_0038 EZ404U	65	110	3.835	441/115	3700	3600	6000	3.2	20.0	1.3	13
782	28	30	7.4	1.2	C002_0038 EZ502U	65	110	3.835	441/115	3700	3600	6000	5.5	20.0	1.3	13
782	28	31	7.4	1.2	C002_0038 EZ701U	65	110	3.835	441/115	3700	3600	6000	8.8	20.0	1.3	14
904	5.1	5.4	2.6	3.8	C002_0033 EZ302U	16	24	3.318	1702/513	3700	3600	6000	0.65	20.0	1.3	8.1
904	6.7	7.0	3.4	2.9	C002_0033 EZ303U	19	24	3.318	1702/513	3700	3600	6000	0.76	20.0	1.3	8.6
904	9.0	9.7	2.7	3.6	C002_0033 EZ401U	27	97	3.318	1702/513	3700	3600	6000	1.3	20.0	1.3	10
904	14	15	4.2	2.4	C002_0033 EZ501U	51	97	3.318	1702/513	3700	3600	6000	3.3	20.0	1.3	11
904	15	17	4.6	2.2	C002_0033 EZ402U	51	97	3.318	1702/513	3700	3600	6000	2.0	20.0	1.3	11
904	22	28	6.7	1.5	C002_0033 EZ404U	62	97	3.318	1702/513	3700	3600	6000	3.3	20.0	1.3	13
904	24	26	7.2	1.4	C002_0033 EZ502U	62	97	3.318	1702/513	3700	3600	6000	5.6	20.0	1.3	13

n_{2N} [rpm]	M_{2N} [Nm]	$M_{2,0}$ [Nm]	a_{th}	S	Type	M_{2acc} [Nm]	M_{2NOT} [Nm]	i	i_{exakt}	n_{1maxDB} EL1,2,3,4 [rpm]	n_{1maxDB} EL5,6 [rpm]	n_{1maxZB} [rpm]	J_1 [kgcm²]	$\Delta\varphi_2$ [arcmin]	C_2 [Nm/ arcmin]	m [kg]
C0 (n_{1N} = 3000 min^{-1}, $M_{2acc,max}$ = 72 Nm)																
904	24	27	7.2	1.4	C002_0033 EZ701U	62	97	3.318	1702/513	3700	3600	6000	8.9	20.0	1.3	14
904	31	36	9.5	1.0	C002_0033 EZ503U	62	97	3.318	1702/513	3700	3600	6000	7.9	20.0	1.3	14
978	4.7	5.0	2.7	3.8	C002_0031 EZ302U	15	22	3.067	46/15	3700	3600	6000	0.66	20.0	1.3	8.1
978	6.2	6.5	3.5	2.9	C002_0031 EZ303U	18	22	3.067	46/15	3700	3600	6000	0.77	20.0	1.3	8.6
978	8.3	8.9	2.7	3.8	C002_0031 EZ401U	25	89	3.067	46/15	3700	3600	6000	1.3	20.0	1.3	10
978	13	14	4.1	2.5	C002_0031 EZ501U	48	89	3.067	46/15	3700	3600	6000	3.3	20.0	1.3	11
978	14	15	4.5	2.3	C002_0031 EZ402U	48	89	3.067	46/15	3700	3600	6000	2.0	20.0	1.3	11
978	21	26	6.7	1.5	C002_0031 EZ404U	60	89	3.067	46/15	3700	3600	6000	3.3	20.0	1.3	13
978	22	24	7.1	1.4	C002_0031 EZ502U	60	89	3.067	46/15	3700	3600	6000	5.6	20.0	1.3	13
978	22	25	7.1	1.4	C002_0031 EZ701U	60	89	3.067	46/15	3700	3600	6000	8.9	20.0	1.3	14
978	29	33	9.4	1.1	C002_0031 EZ503U	60	89	3.067	46/15	3700	3600	6000	7.9	20.0	1.3	14
1083	7.5	8.1	2.7	4.1	C002_0028 EZ401U	23	81	2.769	36/13	3500	3000	6000	1.4	20.0	1.3	10
1083	12	13	4.1	2.7	C002_0028 EZ501U	43	81	2.769	36/13	3500	3000	6000	3.3	20.0	1.3	11
1083	13	14	4.5	2.4	C002_0028 EZ402U	43	81	2.769	36/13	3500	3000	6000	2.1	20.0	1.3	11
1083	19	23	6.5	1.7	C002_0028 EZ404U	58	81	2.769	36/13	3500	3000	6000	3.4	20.0	1.3	13
1083	20	21	7.0	1.5	C002_0028 EZ502U	58	81	2.769	36/13	3500	3000	6000	5.6	20.0	1.3	13
1083	20	22	7.0	1.5	C002_0028 EZ701U	54	81	2.769	36/13	3500	3000	6000	8.9	20.0	1.3	14
1083	26	30	9.2	1.2	C002_0028 EZ503U	58	81	2.769	36/13	3500	3000	6000	8.0	20.0	1.3	14
1502	3.1	3.3	3.4	3.8	C002_0020 EZ302U	9.7	15	1.997	1480/741	3500	3000	6000	1.0	20.0	1.3	8.1
1502	4.0	4.2	4.4	2.9	C002_0020 EZ303U	12	15	1.997	1480/741	3500	3000	6000	1.1	20.0	1.3	8.6
1502	8.3	9.1	3.9	3.3	C002_0020 EZ501U	31	58	1.997	1480/741	3500	3000	6000	3.6	20.0	1.3	11
1502	9.1	10	4.2	3.0	C002_0020 EZ402U	31	58	1.997	1480/741	3500	3000	6000	2.4	20.0	1.3	11
1502	13	17	6.2	2.1	C002_0020 EZ404U	47	58	1.997	1480/741	3500	3000	6000	3.7	20.0	1.3	13
1502	14	15	6.6	1.9	C002_0020 EZ502U	47	58	1.997	1480/741	3500	3000	6000	5.9	20.0	1.3	13
1502	14	16	6.6	1.9	C002_0020 EZ701U	39	58	1.997	1480/741	3500	3000	6000	9.2	20.0	1.3	14
1502	19	22	8.7	1.5	C002_0020 EZ503U	47	58	1.997	1480/741	3500	3000	6000	8.3	20.0	1.3	14
C0 (n_{1N} = 6000 min^{-1}, $M_{2acc,max}$ = 72 Nm)																
86	41	47	1.5	1.5	C002_0700 EZ203U	65	120	69.88	559/8	4000	4000	7000	0.18	16.0	1.6	7.7
96	37	42	1.4	1.6	C002_0620 EZ203U	72	120	62.35	1247/20	4000	4000	7000	0.18	16.0	1.6	7.7
96	54	57	2.0	1.1	C002_0620 EZ301U	72	120	62.35	1247/20	4000	4000	7000	0.20	16.0	1.6	7.5
107	33	37	1.3	1.8	C002_0560 EZ203U	65	120	55.97	2015/36	4000	4000	7000	0.19	16.0	1.6	7.7
107	48	52	1.9	1.2	C002_0560 EZ301U	65	120	55.97	2015/36	4000	4000	7000	0.21	16.0	1.6	7.5
120	30	33	1.3	2.0	C002_0500 EZ203U	72	120	49.94	899/18	4000	4000	7000	0.19	16.0	1.6	7.7
120	43	46	1.8	1.4	C002_0500 EZ301U	72	120	49.94	899/18	4000	4000	7000	0.21	16.0	1.6	7.5
128	28	31	1.2	2.2	C002_0470 EZ203U	65	120	46.82	7865/168	4000	4000	7000	0.19	16.0	1.6	7.7
128	40	43	1.8	1.5	C002_0470 EZ301U	65	120	46.82	7865/168	4000	4000	7000	0.21	16.0	1.6	7.5
144	25	28	1.1	2.4	C002_0420 EZ203U	72	120	41.77	3509/84	4000	4000	7000	0.19	16.0	1.6	7.7
144	36	38	1.7	1.7	C002_0420 EZ301U	72	120	41.77	3509/84	4000	4000	7000	0.21	16.0	1.6	7.5
171	21	23	1.1	2.9	C002_0350 EZ203U	65	120	35.03	1261/36	4000	4000	7000	0.21	16.0	1.6	7.7
171	30	32	1.5	2.0	C002_0350 EZ301U	65	120	35.03	1261/36	4000	4000	7000	0.23	16.0	1.6	7.5
171	51	57	2.6	1.2	C002_0350 EZ302U	65	120	35.03	1261/36	4000	4000	7000	0.33	16.0	1.6	8.1
192	18	21	1.0	3.2	C002_0310 EZ203U	72	120	31.26	2813/90	4000	4000	7000	0.21	16.0	1.6	7.7
192	27	29	1.4	2.2	C002_0310 EZ301U	72	120	31.26	2813/90	4000	4000	7000	0.23	16.0	1.6	7.5
192	45	51	2.4	1.3	C002_0310 EZ302U	72	120	31.26	2813/90	4000	4000	7000	0.33	16.0	1.6	8.1
192	59	68	3.2	1.0	C002_0310 EZ303U	72	120	31.26	2813/90	4000	4000	7000	0.44	16.0	1.6	8.6
214	17	19	0.9	3.6	C002_0280 EZ203U	65	120	27.99	2015/72	4000	4000	7000	0.23	16.0	1.6	7.7
214	24	26	1.4	2.5	C002_0280 EZ301U	65	120	27.99	2015/72	4000	4000	7000	0.25	16.0	1.6	7.5
214	41	46	2.3	1.5	C002_0280 EZ302U	65	120	27.99	2015/72	4000	4000	7000	0.35	16.0	1.6	8.1
214	53	61	3.0	1.1	C002_0280 EZ303U	65	120	27.99	2015/72	4000	4000	7000	0.46	16.0	1.6	8.6
240	15	17	0.9	4.0	C002_0250 EZ203U	65	120	24.97	899/36	4000	4000	7000	0.23	16.0	1.6	7.7
240	22	23	1.3	2.8	C002_0250 EZ301U	68	120	24.97	899/36	4000	4000	7000	0.25	16.0	1.6	7.5
240	36	41	2.2	1.6	C002_0250 EZ302U	72	120	24.97	899/36	4000	4000	7000	0.35	16.0	1.6	8.1
240	47	55	2.9	1.3	C002_0250 EZ303U	72	120	24.97	899/36	4000	4000	7000	0.46	16.0	1.6	8.6
240	56	68	3.4	1.1	C002_0250 EZ401U	72	120	24.97	899/36	4000	4000	7000	0.99	16.0	1.6	10
258	14	16	0.9	4.3	C002_0230 EZ203U	61	120	23.21	325/14	4000	4000	7000	0.24	16.0	1.6	7.7
258	20	21	1.3	2.9	C002_0230 EZ301U	63	120	23.21	325/14	4000	4000	7000	0.27	16.0	1.6	7.5
258	34	38	2.2	1.7	C002_0230 EZ302U	65	120	23.21	325/14	4000	4000	7000	0.37	16.0	1.6	8.1
258	44	51	2.8	1.3	C002_0230 EZ303U	65	120	23.21	325/14	4000	4000	7000	0.48	16.0	1.6	8.6
258	52	63	3.3	1.1	C002_0230 EZ401U	65	120	23.21	325/14	4000	4000	7000	1.0	16.0	1.6	10
290	12	14	0.9	4.6	C002_0210 EZ203U	54	120	20.71	145/7	4000	4000	7000	0.24	16.0	1.6	7.7
290	18	19	1.3	3.1	C002_0210 EZ301U	56	120	20.71	145/7	4000	4000	7000	0.27	16.0	1.6	7.5
290	30	34	2.1	1.9	C002_0210 EZ302U	72	120	20.71	145/7	4000	4000	7000	0.37	16.0	1.6	8.1
290	39	45	2.8	1.4	C002_0210 EZ303U	72	120	20.71	145/7	4000	4000	7000	0.48	16.0	1.6	8.6
290	46	56	3.3	1.2	C002_0210 EZ401U	72	120	20.71	145/7	4000	4000	7000	1.0	16.0	1.6	10

n_{2N} [rpm]	M_{2N} [Nm]	$M_{2,0}$ [Nm]	a_{th}	S	Type	M_{2acc} [Nm]	M_{2NOT} [Nm]	i	i_{exakt}	n_{1maxDB} EL1,2,3,4 [rpm]	n_{1maxDB} EL5,6 [rpm]	n_{1maxZB} [rpm]	J_1 [kgcm²]	$\Delta\varphi_2$ [arcmin]	C_2 [Nm/ arcmin]	m [kg]
C0 (n_{1N} = 6000 min^{-1}, $M_{2acc,max}$ = 72 Nm)																
342	15	16	1.2	3.5	C002_0175 EZ301U	48	120	17.53	3575/204	4000	4000	6500	0.31	16.0	1.6	7.5
342	25	29	2.1	2.1	C002_0175 EZ302U	65	120	17.53	3575/204	4000	4000	6500	0.41	16.0	1.6	8.1
342	33	38	2.7	1.6	C002_0175 EZ303U	65	120	17.53	3575/204	4000	4000	6500	0.52	16.0	1.6	8.6
342	39	48	3.2	1.4	C002_0175 EZ401U	65	120	17.53	3575/204	4000	4000	6500	1.0	16.0	1.6	10
384	13	14	1.2	3.8	C002_0155 EZ301U	42	114	15.64	1595/102	4000	4000	6500	0.31	16.0	1.6	7.5
384	23	25	2.0	2.3	C002_0155 EZ302U	72	114	15.64	1595/102	4000	4000	6500	0.41	16.0	1.6	8.1
384	30	34	2.6	1.7	C002_0155 EZ303U	72	114	15.64	1595/102	4000	4000	6500	0.52	16.0	1.6	8.6
384	35	42	3.1	1.5	C002_0155 EZ401U	72	120	15.64	1595/102	4000	4000	6500	1.0	16.0	1.6	10
426	12	13	1.2	4.1	C002_0140 EZ301U	38	102	14.08	169/12	4000	4000	6500	0.35	16.0	1.6	7.5
426	20	23	2.0	2.4	C002_0140 EZ302U	65	102	14.08	169/12	4000	4000	6500	0.45	16.0	1.6	8.1
426	27	31	2.6	1.8	C002_0140 EZ303U	65	102	14.08	169/12	4000	4000	6500	0.56	16.0	1.6	8.6
426	31	38	3.1	1.6	C002_0140 EZ401U	65	120	14.08	169/12	4000	4000	6500	1.1	16.0	1.6	10
426	46	60	4.5	1.1	C002_0140 EZ501U	65	120	14.08	169/12	4000	4000	6500	3.1	16.0	1.6	11
426	48	67	4.6	1.0	C002_0140 EZ402U	65	120	14.08	169/12	4000	4000	6500	1.8	16.0	1.6	11
477	11	12	1.2	4.4	C002_0125 EZ301U	34	91	12.57	377/30	4000	4000	6500	0.35	16.0	1.6	7.5
477	18	20	2.0	2.6	C002_0125 EZ302U	61	91	12.57	377/30	4000	4000	6500	0.45	16.0	1.6	8.1
477	24	27	2.5	2.0	C002_0125 EZ303U	72	91	12.57	377/30	4000	4000	6500	0.56	16.0	1.6	8.6
477	28	34	3.0	1.7	C002_0125 EZ401U	72	120	12.57	377/30	4000	4000	6500	1.1	16.0	1.6	10
477	41	54	4.4	1.1	C002_0125 EZ501U	72	120	12.57	377/30	4000	4000	6500	3.1	16.0	1.6	11
477	43	60	4.6	1.1	C002_0125 EZ402U	72	120	12.57	377/30	4000	4000	6500	1.8	16.0	1.6	11
520	10	11	1.1	4.6	C002_0115 EZ301U	31	84	11.54	3185/276	3700	3600	6000	0.39	16.0	1.6	7.5
520	17	19	1.9	2.8	C002_0115 EZ302U	56	84	11.54	3185/276	3700	3600	6000	0.49	16.0	1.6	8.1
520	22	25	2.5	2.1	C002_0115 EZ303U	65	84	11.54	3185/276	3700	3600	6000	0.60	16.0	1.6	8.6
520	26	31	2.9	1.8	C002_0115 EZ401U	65	120	11.54	3185/276	3700	3600	6000	1.1	16.0	1.6	10
520	38	49	4.4	1.2	C002_0115 EZ501U	65	120	11.54	3185/276	3700	3600	6000	3.1	16.0	1.6	11
520	39	55	4.5	1.2	C002_0115 EZ402U	65	120	11.54	3185/276	3700	3600	6000	1.8	16.0	1.6	11
583	15	17	1.9	3.0	C002_0105 EZ302U	50	75	10.30	1421/138	3700	3600	6000	0.49	16.0	1.6	8.1
583	20	22	2.5	2.3	C002_0105 EZ303U	60	75	10.30	1421/138	3700	3600	6000	0.60	16.0	1.6	8.6
583	23	28	2.9	1.9	C002_0105 EZ401U	72	120	10.30	1421/138	3700	3600	6000	1.1	16.0	1.6	10
583	34	44	4.3	1.3	C002_0105 EZ501U	72	120	10.30	1421/138	3700	3600	6000	3.1	16.0	1.6	11
583	35	49	4.4	1.3	C002_0105 EZ402U	72	120	10.30	1421/138	3700	3600	6000	1.8	16.0	1.6	11
650	13	15	1.9	3.2	C002_0092 EZ302U	45	67	9.228	1495/162	3700	3600	6000	0.56	16.0	1.6	8.1
650	18	20	2.4	2.4	C002_0092 EZ303U	54	67	9.228	1495/162	3700	3600	6000	0.67	16.0	1.6	8.6
650	21	25	2.8	2.1	C002_0092 EZ401U	65	120	9.228	1495/162	3700	3600	6000	1.2	16.0	1.6	10
650	30	39	4.2	1.4	C002_0092 EZ501U	65	120	9.228	1495/162	3700	3600	6000	3.2	16.0	1.6	11
650	31	44	4.3	1.4	C002_0092 EZ402U	65	120	9.228	1495/162	3700	3600	6000	1.9	16.0	1.6	11
729	12	13	1.8	3.5	C002_0082 EZ302U	40	60	8.235	667/81	3700	3600	6000	0.56	16.0	1.6	8.1
729	16	18	2.4	2.6	C002_0082 EZ303U	48	60	8.235	667/81	3700	3600	6000	0.67	16.0	1.6	8.6
729	18	22	2.8	2.3	C002_0082 EZ401U	68	120	8.235	667/81	3700	3600	6000	1.2	16.0	1.6	10
729	27	35	4.1	1.5	C002_0082 EZ501U	72	120	8.235	667/81	3700	3600	6000	3.2	16.0	1.6	11
729	28	39	4.2	1.5	C002_0082 EZ402U	72	120	8.235	667/81	3700	3600	6000	1.9	16.0	1.6	11
778	11	13	2.1	3.1	C002_0077 EZ302U	37	53	7.714	54/7	4000	4000	7000	0.38	20.0	1.3	8.1
778	15	17	2.8	2.3	C002_0077 EZ303U	42	53	7.714	54/7	4000	4000	7000	0.49	20.0	1.3	8.6
778	17	21	3.3	2.0	C002_0077 EZ401U	64	110	7.714	54/7	4000	4000	7000	1.0	20.0	1.3	10
778	25	33	4.8	1.3	C002_0077 EZ501U	65	110	7.714	54/7	4000	4000	7000	3.0	20.0	1.3	11
778	26	37	5.0	1.3	C002_0077 EZ402U	65	110	7.714	54/7	4000	4000	7000	1.7	20.0	1.3	11
952	9.2	10	2.1	3.5	C002_0063 EZ302U	31	46	6.300	2035/323	4000	4000	6500	0.43	20.0	1.3	8.1
952	12	14	2.7	2.7	C002_0063 EZ303U	37	46	6.300	2035/323	4000	4000	6500	0.54	20.0	1.3	8.6
952	14	17	3.2	2.3	C002_0063 EZ401U	52	110	6.300	2035/323	4000	4000	6500	1.1	20.0	1.3	10
952	21	27	4.7	1.5	C002_0063 EZ501U	65	110	6.300	2035/323	4000	4000	6500	3.0	20.0	1.3	11
952	21	30	4.8	1.5	C002_0063 EZ402U	65	110	6.300	2035/323	4000	4000	6500	1.8	20.0	1.3	11
952	32	48	7.1	1.0	C002_0063 EZ502U	65	110	6.300	2035/323	4000	4000	6500	5.3	20.0	1.3	13
952	32	48	7.1	1.0	C002_0063 EZ701U	65	110	6.300	2035/323	4000	4000	6500	8.6	20.0	1.3	14
1030	8.5	9.5	2.0	3.7	C002_0058 EZ302U	28	42	5.824	99/17	4000	4000	6500	0.43	20.0	1.3	8.1
1030	11	13	2.7	2.8	C002_0058 EZ303U	34	42	5.824	99/17	4000	4000	6500	0.54	20.0	1.3	8.6
1030	13	16	3.1	2.4	C002_0058 EZ401U	48	110	5.824	99/17	4000	4000	6500	1.1	20.0	1.3	10
1030	19	25	4.6	1.6	C002_0058 EZ501U	65	110	5.824	99/17	4000	4000	6500	3.0	20.0	1.3	11
1030	20	28	4.7	1.6	C002_0058 EZ402U	65	110	5.824	99/17	4000	4000	6500	1.8	20.0	1.3	11
1030	29	44	7.0	1.1	C002_0058 EZ502U	65	110	5.824	99/17	4000	4000	6500	5.3	20.0	1.3	13
1030	29	45	7.0	1.1	C002_0058 EZ701U	65	110	5.824	99/17	4000	4000	6500	8.6	20.0	1.3	14
1185	7.4	8.3	2.0	4.0	C002_0051 EZ302U	25	37	5.063	481/95	4000	4000	6500	0.48	20.0	1.3	8.1
1185	9.6	11	2.6	3.1	C002_0051 EZ303U	29	37	5.063	481/95	4000	4000	6500	0.59	20.0	1.3	8.6
1185	11	14	3.0	2.6	C002_0051 EZ401U	42	110	5.063	481/95	4000	4000	6500	1.1	20.0	1.3	10
1185	17	22	4.5	1.8	C002_0051 EZ501U	65	110	5.063	481/95	4000	4000	6500	3.1	20.0	1.3	11

n_{2N} [rpm]	M_{2N} [Nm]	$M_{2,0}$ [Nm]	a_{th}	S	Type	M_{2acc} [Nm]	M_{2NOT} [Nm]	i	i_{exakt}	n_{1maxDB} EL1,2,3,4 [rpm]	n_{1maxDB} EL5,6 [rpm]	n_{1maxZB} [rpm]	J_1 [kgcm²]	$\Delta\varphi_2$ [arcmin]	C_2 [Nm/ arcmin]	m [kg]
C0 (n_{1N} = 6000 min^{-1}, $M_{2acc,max}$ = 72 Nm)																
1185	17	24	4.6	1.7	C002_0051 EZ402U	65	110	5.063	481/95	4000	4000	6500	1.8	20.0	1.3	11
1185	26	38	6.9	1.2	C002_0051 EZ502U	65	110	5.063	481/95	4000	4000	6500	5.4	20.0	1.3	13
1185	26	39	6.9	1.2	C002_0051 EZ701U	65	110	5.063	481/95	4000	4000	6500	8.7	20.0	1.3	14
1185	28	41	7.7	1.0	C002_0051 EZ404U	65	110	5.063	481/95	4000	4000	6500	3.2	20.0	1.3	13
1282	6.8	7.6	2.1	4.0	C002_0047 EZ302U	23	34	4.680	117/25	4000	4000	6500	0.49	20.0	1.3	8.1
1282	8.9	10	2.7	3.1	C002_0047 EZ303U	27	34	4.680	117/25	4000	4000	6500	0.60	20.0	1.3	8.6
1282	10	13	3.0	2.8	C002_0047 EZ401U	39	110	4.680	117/25	4000	4000	6500	1.1	20.0	1.3	10
1282	15	20	4.4	1.9	C002_0047 EZ501U	65	110	4.680	117/25	4000	4000	6500	3.1	20.0	1.3	11
1282	16	22	4.6	1.8	C002_0047 EZ402U	65	110	4.680	117/25	4000	4000	6500	1.8	20.0	1.3	11
1282	24	35	6.8	1.2	C002_0047 EZ502U	65	110	4.680	117/25	4000	4000	6500	5.4	20.0	1.3	13
1282	24	36	6.8	1.2	C002_0047 EZ701U	65	110	4.680	117/25	4000	4000	6500	8.7	20.0	1.3	14
1282	26	38	7.6	1.1	C002_0047 EZ404U	65	110	4.680	117/25	4000	4000	6500	3.2	20.0	1.3	13
1282	28	48	8.1	1.0	C002_0047 EZ503U	65	110	4.680	117/25	4000	4000	6500	7.8	20.0	1.3	14
1446	6.0	6.8	2.2	4.0	C002_0041 EZ302U	20	30	4.149	1813/437	3700	3600	6000	0.55	20.0	1.3	8.1
1446	7.9	9.1	2.9	3.1	C002_0041 EZ303U	24	30	4.149	1813/437	3700	3600	6000	0.66	20.0	1.3	8.6
1446	9.3	11	2.9	3.0	C002_0041 EZ401U	34	110	4.149	1813/437	3700	3600	6000	1.2	20.0	1.3	10
1446	14	18	4.3	2.0	C002_0041 EZ501U	64	110	4.149	1813/437	3700	3600	6000	3.2	20.0	1.3	11
1446	14	20	4.5	2.0	C002_0041 EZ402U	64	110	4.149	1813/437	3700	3600	6000	1.9	20.0	1.3	11
1446	21	31	6.6	1.3	C002_0041 EZ502U	65	110	4.149	1813/437	3700	3600	6000	5.5	20.0	1.3	13
1446	21	32	6.6	1.3	C002_0041 EZ701U	65	110	4.149	1813/437	3700	3600	6000	8.8	20.0	1.3	14
1446	23	34	7.4	1.2	C002_0041 EZ404U	65	110	4.149	1813/437	3700	3600	6000	3.2	20.0	1.3	13
1446	25	43	7.9	1.1	C002_0041 EZ503U	65	110	4.149	1813/437	3700	3600	6000	7.8	20.0	1.3	14
1565	5.6	6.3	2.3	4.0	C002_0038 EZ302U	19	28	3.835	441/115	3700	3600	6000	0.55	20.0	1.3	8.1
1565	7.3	8.4	3.0	3.1	C002_0038 EZ303U	22	28	3.835	441/115	3700	3600	6000	0.66	20.0	1.3	8.6
1565	8.6	10	2.9	3.2	C002_0038 EZ401U	32	110	3.835	441/115	3700	3600	6000	1.2	20.0	1.3	10
1565	13	16	4.3	2.1	C002_0038 EZ501U	60	110	3.835	441/115	3700	3600	6000	3.2	20.0	1.3	11
1565	13	18	4.4	2.1	C002_0038 EZ402U	60	110	3.835	441/115	3700	3600	6000	1.9	20.0	1.3	11
1565	19	29	6.6	1.4	C002_0038 EZ502U	65	110	3.835	441/115	3700	3600	6000	5.5	20.0	1.3	13
1565	19	29	6.6	1.4	C002_0038 EZ701U	65	110	3.835	441/115	3700	3600	6000	8.8	20.0	1.3	14
1565	22	31	7.3	1.3	C002_0038 EZ404U	65	110	3.835	441/115	3700	3600	6000	3.2	20.0	1.3	13
1565	23	39	7.8	1.2	C002_0038 EZ503U	65	110	3.835	441/115	3700	3600	6000	7.8	20.0	1.3	14
1808	4.8	5.4	2.5	4.0	C002_0033 EZ302U	16	24	3.318	1702/513	3700	3600	6000	0.65	20.0	1.3	8.1
1808	6.3	7.2	3.2	3.1	C002_0033 EZ303U	19	24	3.318	1702/513	3700	3600	6000	0.76	20.0	1.3	8.6
1808	7.4	9.0	2.8	3.5	C002_0033 EZ401U	27	97	3.318	1702/513	3700	3600	6000	1.3	20.0	1.3	10
1808	11	14	4.2	2.4	C002_0033 EZ501U	51	97	3.318	1702/513	3700	3600	6000	3.3	20.0	1.3	11
1808	11	16	4.3	2.3	C002_0033 EZ402U	51	97	3.318	1702/513	3700	3600	6000	2.0	20.0	1.3	11
1808	17	25	6.4	1.5	C002_0033 EZ502U	62	97	3.318	1702/513	3700	3600	6000	5.6	20.0	1.3	13
1808	17	25	6.4	1.5	C002_0033 EZ701U	62	97	3.318	1702/513	3700	3600	6000	8.9	20.0	1.3	14
1808	19	27	7.1	1.4	C002_0033 EZ404U	62	97	3.318	1702/513	3700	3600	6000	3.3	20.0	1.3	13
1808	20	34	7.6	1.3	C002_0033 EZ503U	62	97	3.318	1702/513	3700	3600	6000	7.9	20.0	1.3	14
1956	4.5	5.0	2.6	4.0	C002_0031 EZ302U	15	22	3.067	46/15	3700	3600	6000	0.66	20.0	1.3	8.1
1956	5.8	6.7	3.4	3.1	C002_0031 EZ303U	18	22	3.067	46/15	3700	3600	6000	0.77	20.0	1.3	8.6
1956	6.8	8.3	2.8	3.7	C002_0031 EZ401U	25	89	3.067	46/15	3700	3600	6000	1.3	20.0	1.3	10
1956	10	13	4.1	2.5	C002_0031 EZ501U	48	89	3.067	46/15	3700	3600	6000	3.3	20.0	1.3	11
1956	10	15	4.3	2.4	C002_0031 EZ402U	48	89	3.067	46/15	3700	3600	6000	2.0	20.0	1.3	11
1956	15	23	6.3	1.6	C002_0031 EZ502U	60	89	3.067	46/15	3700	3600	6000	5.6	20.0	1.3	13
1956	15	24	6.3	1.6	C002_0031 EZ701U	60	89	3.067	46/15	3700	3600	6000	8.9	20.0	1.3	14
1956	17	25	7.0	1.5	C002_0031 EZ404U	60	89	3.067	46/15	3700	3600	6000	3.3	20.0	1.3	13
1956	18	32	7.5	1.4	C002_0031 EZ503U	60	89	3.067	46/15	3700	3600	6000	7.9	20.0	1.3	14
2167	6.2	7.5	2.7	3.9	C002_0028 EZ401U	23	81	2.769	36/13	3500	3000	6000	1.4	20.0	1.3	10
2167	9.1	12	4.1	2.7	C002_0028 EZ501U	43	81	2.769	36/13	3500	3000	6000	3.3	20.0	1.3	11
2167	9.4	13	4.2	2.6	C002_0028 EZ402U	43	81	2.769	36/13	3500	3000	6000	2.1	20.0	1.3	11
2167	14	21	6.2	1.7	C002_0028 EZ502U	58	81	2.769	36/13	3500	3000	6000	5.6	20.0	1.3	13
2167	14	21	6.2	1.7	C002_0028 EZ701U	54	81	2.769	36/13	3500	3000	6000	8.9	20.0	1.3	14
2167	16	23	6.9	1.6	C002_0028 EZ404U	58	81	2.769	36/13	3500	3000	6000	3.4	20.0	1.3	13
2167	17	28	7.4	1.5	C002_0028 EZ503U	58	81	2.769	36/13	3500	3000	6000	8.0	20.0	1.3	14
3005	2.9	3.3	3.2	4.0	C002_0020 EZ302U	9.7	15	1.997	1480/741	3500	3000	6000	1.0	20.0	1.3	8.1
3005	3.8	4.4	4.2	3.1	C002_0020 EZ303U	12	15	1.997	1480/741	3500	3000	6000	1.1	20.0	1.3	8.6
3005	4.5	5.4	2.6	4.9	C002_0020 EZ401U	16	58	1.997	1480/741	3500	3000	6000	1.7	20.0	1.3	10
3005	6.6	8.5	3.8	3.3	C002_0020 EZ501U	31	58	1.997	1480/741	3500	3000	6000	3.6	20.0	1.3	11
3005	6.8	9.5	4.0	3.2	C002_0020 EZ402U	31	58	1.997	1480/741	3500	3000	6000	2.4	20.0	1.3	11
3005	10	15	5.9	2.2	C002_0020 EZ502U	47	58	1.997	1480/741	3500	3000	6000	5.9	20.0	1.3	13
3005	10	15	5.9	2.2	C002_0020 EZ701U	39	58	1.997	1480/741	3500	3000	6000	9.2	20.0	1.3	14

n_{2N} [rpm]	M_{2N} [Nm]	$M_{2,0}$ [Nm]	a_{th}	S	Type	M_{2acc} [Nm]	M_{2NOT} [Nm]	i	i_{exakt}	n_{1maxDB} EL1,2,3,4 [rpm]	n_{1maxDB} EL5,6 [rpm]	n_{1maxZB} [rpm]	J_1 [kgcm²]	$\Delta\varphi_2$ [arcmin]	C_2 [Nm/arcmin]	m [kg]
C0 (n_{1N} = 6000 min^{-1}, $M_{2acc,max}$ = 72 Nm)																
3005	11	16	6.6	1.9	C002_0020 EZ404U	47	58	1.997	1480/741	3500	3000	6000	3.7	20.0	1.3	13
3005	12	21	7.0	1.8	C002_0020 EZ503U	47	58	1.997	1480/741	3500	3000	6000	8.3	20.0	1.3	14
C1 (n_{1N} = 3000 min^{-1}, $M_{2acc,max}$ = 140 Nm)																
27	99	101	1.6	1.2	C103_1110 EZ301U	138	240	111.1	1222/11	4000	3900	6500	0.25	15.0	3.9	15
33	82	84	1.4	1.5	C103_0920 EZ301U	138	240	92.13	16215/176	4000	3900	6500	0.25	15.0	3.9	15
37	73	74	1.3	1.7	C103_0820 EZ301U	138	240	81.64	31349/384	4000	3900	6500	0.25	15.0	3.9	15
43	64	65	1.3	1.9	C102_0700 EZ301U	138	240	70.46	775/11	4000	3900	6500	0.22	15.0	3.9	12
43	109	115	2.2	1.1	C102_0700 EZ302U	138	240	70.46	775/11	4000	3900	6500	0.32	15.0	3.9	13
48	56	58	1.2	2.1	C102_0620 EZ301U	138	228	62.43	4495/72	4000	3900	6500	0.22	15.0	3.9	12
48	96	102	2.0	1.2	C102_0620 EZ302U	138	228	62.43	4495/72	4000	3900	6500	0.32	15.0	3.9	13
53	51	52	1.1	2.4	C102_0560 EZ301U	138	240	56.36	620/11	4000	3900	6500	0.24	15.0	3.9	12
53	87	92	1.9	1.4	C102_0560 EZ302U	138	240	56.36	620/11	4000	3900	6500	0.34	15.0	3.9	13
53	113	120	2.5	1.1	C102_0560 EZ303U	138	240	56.36	620/11	4000	3900	6500	0.45	15.0	3.9	14
60	45	46	1.1	2.7	C102_0500 EZ301U	136	240	49.94	899/18	4000	3900	6500	0.24	15.0	3.9	12
60	77	81	1.8	1.6	C102_0500 EZ302U	138	240	49.94	899/18	4000	3900	6500	0.34	15.0	3.9	13
60	100	106	2.4	1.2	C102_0500 EZ303U	138	240	49.94	899/18	4000	3900	6500	0.45	15.0	3.9	14
64	42	43	1.0	2.8	C102_0470 EZ301U	127	240	46.91	516/11	4000	3900	6500	0.26	15.0	3.9	12
64	72	76	1.8	1.7	C102_0470 EZ302U	138	240	46.91	516/11	4000	3900	6500	0.36	15.0	3.9	13
64	94	100	2.3	1.3	C102_0470 EZ303U	138	240	46.91	516/11	4000	3900	6500	0.47	15.0	3.9	14
72	37	38	1.0	3.2	C102_0420 EZ301U	113	232	41.57	1247/30	4000	3900	6500	0.26	15.0	3.9	12
72	64	68	1.7	1.9	C102_0420 EZ302U	138	232	41.57	1247/30	4000	3900	6500	0.36	15.0	3.9	13
72	83	88	2.2	1.4	C102_0420 EZ303U	138	232	41.57	1247/30	4000	3900	6500	0.47	15.0	3.9	14
72	113	121	2.9	1.1	C102_0420 EZ401U	138	240	41.57	1247/30	4000	3900	6500	1.0	15.0	3.9	15
86	32	32	0.9	3.8	C102_0350 EZ301U	95	217	35.07	2700/77	4000	3900	6500	0.30	15.0	3.9	12
86	54	57	1.5	2.2	C102_0350 EZ302U	138	217	35.07	2700/77	4000	3900	6500	0.40	15.0	3.9	13
86	70	74	2.0	1.7	C102_0350 EZ303U	138	217	35.07	2700/77	4000	3900	6500	0.51	15.0	3.9	14
86	95	102	2.7	1.3	C102_0350 EZ401U	138	240	35.07	2700/77	4000	3900	6500	1.0	15.0	3.9	15
97	28	29	0.8	4.3	C102_0310 EZ301U	84	193	31.07	435/14	4000	3900	6500	0.30	15.0	3.9	12
97	48	51	1.4	2.5	C102_0310 EZ302U	138	193	31.07	435/14	4000	3900	6500	0.40	15.0	3.9	13
97	62	66	1.9	1.9	C102_0310 EZ303U	138	193	31.07	435/14	4000	3900	6500	0.51	15.0	3.9	14
97	84	90	2.5	1.4	C102_0310 EZ401U	138	240	31.07	435/14	4000	3900	6500	1.0	15.0	3.9	15
106	77	83	2.4	1.6	C102_0280 EZ401U	138	240	28.36	312/11	4000	3900	6500	1.1	15.0	3.9	15
106	118	129	3.7	1.0	C102_0280 EZ501U	138	240	28.36	312/11	4000	3900	6500	3.1	15.0	3.9	16
119	68	73	2.3	1.8	C102_0250 EZ401U	138	240	25.13	377/15	4000	3900	6500	1.1	15.0	3.9	15
119	105	115	3.5	1.1	C102_0250 EZ501U	138	240	25.13	377/15	4000	3900	6500	3.1	15.0	3.9	16
119	115	127	3.8	1.0	C102_0250 EZ402U	138	240	25.13	377/15	4000	3900	6500	1.8	15.0	3.9	16
128	36	38	1.2	3.3	C102_0240 EZ302U	114	171	23.52	1035/44	4000	3900	6500	0.49	15.0	3.9	13
128	47	50	1.6	2.5	C102_0240 EZ303U	137	171	23.52	1035/44	4000	3900	6500	0.60	15.0	3.9	14
128	64	68	2.2	1.9	C102_0240 EZ401U	138	240	23.52	1035/44	4000	3900	6500	1.1	15.0	3.9	15
128	98	107	3.4	1.2	C102_0240 EZ501U	138	240	23.52	1035/44	4000	3900	6500	3.1	15.0	3.9	16
128	107	119	3.7	1.1	C102_0240 EZ402U	138	240	23.52	1035/44	4000	3900	6500	1.8	15.0	3.9	16
144	32	34	1.2	3.7	C102_0210 EZ302U	101	152	20.84	667/32	4000	3900	6500	0.49	15.0	3.9	13
144	42	44	1.5	2.9	C102_0210 EZ303U	121	152	20.84	667/32	4000	3900	6500	0.60	15.0	3.9	14
144	57	61	2.1	2.1	C102_0210 EZ401U	138	240	20.84	667/32	4000	3900	6500	1.1	15.0	3.9	15
144	87	95	3.2	1.4	C102_0210 EZ501U	138	240	20.84	667/32	4000	3900	6500	3.1	15.0	3.9	16
144	95	105	3.5	1.3	C102_0210 EZ402U	138	240	20.84	667/32	4000	3900	6500	1.8	15.0	3.9	16
169	27	29	1.3	3.8	C102_0175 EZ302U	86	129	17.73	195/11	3800	3500	6000	0.59	15.0	3.9	13
169	36	38	1.6	2.9	C102_0175 EZ303U	103	129	17.73	195/11	3800	3500	6000	0.70	15.0	3.9	14
169	48	52	1.9	2.5	C102_0175 EZ401U	138	240	17.73	195/11	3800	3500	6000	1.2	15.0	3.9	15
169	74	81	2.9	1.6	C102_0175 EZ501U	138	240	17.73	195/11	3800	3500	6000	3.2	15.0	3.9	16
169	81	89	3.2	1.5	C102_0175 EZ402U	138	240	17.73	195/11	3800	3500	6000	1.9	15.0	3.9	16
169	119	148	4.7	1.0	C102_0175 EZ404U	138	240	17.73	195/11	3800	3500	6000	3.3	15.0	3.9	18
191	24	26	1.3	3.8	C102_0155 EZ302U	76	114	15.71	377/24	3800	3500	6000	0.60	15.0	3.9	13
191	32	33	1.7	2.9	C102_0155 EZ303U	91	114	15.71	377/24	3800	3500	6000	0.71	15.0	3.9	14
191	43	46	1.8	2.8	C102_0155 EZ401U	130	240	15.71	377/24	3800	3500	6000	1.2	15.0	3.9	15
191	66	72	2.8	1.8	C102_0155 EZ501U	138	240	15.71	377/24	3800	3500	6000	3.2	15.0	3.9	16
191	72	79	3.0	1.7	C102_0155 EZ402U	138	240	15.71	377/24	3800	3500	6000	1.9	15.0	3.9	16
191	105	131	4.4	1.1	C102_0155 EZ404U	138	240	15.71	377/24	3800	3500	6000	3.3	15.0	3.9	18
191	113	122	4.7	1.1	C102_0155 EZ502U	138	240	15.71	377/24	3800	3500	6000	5.5	15.0	3.9	17
191	113	126	4.7	1.1	C102_0155 EZ701U	138	240	15.71	377/24	3800	3500	6000	8.8	15.0	3.9	19
213	38	41	1.7	3.1	C102_0140 EZ401U	116	240	14.06	2010/143	3800	3500	6000	1.3	15.0	3.9	15
213	59	64	2.6	2.0	C102_0140 EZ501U	138	240	14.06	2010/143	3800	3500	6000	3.3	15.0	3.9	16
213	64	71	2.8	1.9	C102_0140 EZ402U	138	240	14.06	2010/143	3800	3500	6000	2.0	15.0	3.9	16
213	94	117	4.2	1.3	C102_0140 EZ404U	138	240	14.06	2010/143	3800	3500	6000	3.4	15.0	3.9	18

n_{2N} [rpm]	M_{2N} [Nm]	$M_{2,0}$ [Nm]	a_{th}	S	Type	M_{2acc} [Nm]	M_{2NOT} [Nm]	i	i_{exakt}	n_{1maxDB} EL1,2,3,4 [rpm]	n_{1maxDB} EL5,6 [rpm]	n_{1maxZB} [rpm]	J_1 [kgcm²]	$\Delta\varphi_2$ [arcmin]	C_2 [Nm/ arcmin]	m [kg]
C1 (n_{1N} = 3000 min^{-1}, $M_{2acc,max}$ = 140 Nm)																
213	101	109	4.5	1.2	C102_0140 EZ502U	138	240	14.06	2010/143	3800	3500	6000	5.6	15.0	3.9	17
213	101	113	4.5	1.2	C102_0140 EZ701U	138	240	14.06	2010/143	3800	3500	6000	8.9	15.0	3.9	19
241	34	36	1.6	3.5	C102_0125 EZ401U	103	240	12.46	1943/156	3800	3500	6000	1.3	15.0	3.9	15
241	52	57	2.5	2.3	C102_0125 EZ501U	138	240	12.46	1943/156	3800	3500	6000	3.3	15.0	3.9	16
241	57	63	2.7	2.1	C102_0125 EZ402U	138	240	12.46	1943/156	3800	3500	6000	2.0	15.0	3.9	16
241	83	104	4.0	1.4	C102_0125 EZ404U	138	240	12.46	1943/156	3800	3500	6000	3.4	15.0	3.9	18
241	89	97	4.2	1.3	C102_0125 EZ502U	138	240	12.46	1943/156	3800	3500	6000	5.6	15.0	3.9	17
241	89	100	4.2	1.3	C102_0125 EZ701U	138	240	12.46	1943/156	3800	3500	6000	8.9	15.0	3.9	19
241	117	134	5.6	1.0	C102_0125 EZ503U	138	240	12.46	1943/156	3800	3500	6000	8.0	15.0	3.9	19
256	18	19	1.5	3.8	C102_0115 EZ302U	57	85	11.72	1160/99	3600	3100	6000	0.82	15.0	3.9	13
256	24	25	2.0	2.9	C102_0115 EZ303U	68	85	11.72	1160/99	3600	3100	6000	0.93	15.0	3.9	14
256	32	34	1.6	3.7	C102_0115 EZ401U	97	240	11.72	1160/99	3600	3100	6000	1.5	15.0	3.9	15
256	49	53	2.4	2.4	C102_0115 EZ501U	138	240	11.72	1160/99	3600	3100	6000	3.4	15.0	3.9	16
256	53	59	2.7	2.2	C102_0115 EZ402U	138	240	11.72	1160/99	3600	3100	6000	2.2	15.0	3.9	16
256	78	98	3.9	1.5	C102_0115 EZ404U	138	240	11.72	1160/99	3600	3100	6000	3.5	15.0	3.9	18
256	84	91	4.2	1.4	C102_0115 EZ502U	138	240	11.72	1160/99	3600	3100	6000	5.7	15.0	3.9	17
256	84	94	4.2	1.4	C102_0115 EZ701U	138	240	11.72	1160/99	3600	3100	6000	9.0	15.0	3.9	19
256	110	126	5.5	1.1	C102_0115 EZ503U	138	240	11.72	1160/99	3600	3100	6000	8.1	15.0	3.9	19
289	16	17	1.6	3.8	C102_0105 EZ302U	50	76	10.38	841/81	3600	3100	6000	0.83	15.0	3.9	13
289	21	22	2.1	2.9	C102_0105 EZ303U	60	76	10.38	841/81	3600	3100	6000	0.94	15.0	3.9	14
289	28	30	1.6	4.0	C102_0105 EZ401U	86	240	10.38	841/81	3600	3100	6000	1.5	15.0	3.9	15
289	43	47	2.4	2.6	C102_0105 EZ501U	138	240	10.38	841/81	3600	3100	6000	3.4	15.0	3.9	16
289	47	52	2.6	2.4	C102_0105 EZ402U	138	240	10.38	841/81	3600	3100	6000	2.2	15.0	3.9	16
289	69	87	3.8	1.6	C102_0105 EZ404U	138	240	10.38	841/81	3600	3100	6000	3.5	15.0	3.9	18
289	75	81	4.1	1.5	C102_0105 EZ502U	138	240	10.38	841/81	3600	3100	6000	5.7	15.0	3.9	17
289	75	84	4.1	1.5	C102_0105 EZ701U	138	240	10.38	841/81	3600	3100	6000	9.0	15.0	3.9	19
289	98	112	5.4	1.2	C102_0105 EZ503U	138	240	10.38	841/81	3600	3100	6000	8.1	15.0	3.9	19
322	25	27	1.5	4.3	C102_0093 EZ401U	77	240	9.326	3180/341	3600	3100	6000	1.6	15.0	3.9	15
322	39	43	2.3	2.8	C102_0093 EZ501U	138	240	9.326	3180/341	3600	3100	6000	3.6	15.0	3.9	16
322	43	47	2.6	2.6	C102_0093 EZ402U	138	240	9.326	3180/341	3600	3100	6000	2.3	15.0	3.9	16
322	62	78	3.8	1.7	C102_0093 EZ404U	138	240	9.326	3180/341	3600	3100	6000	3.7	15.0	3.9	18
322	67	72	4.0	1.6	C102_0093 EZ502U	138	240	9.326	3180/341	3600	3100	6000	5.9	15.0	3.9	17
322	67	75	4.0	1.6	C102_0093 EZ701U	138	240	9.326	3180/341	3600	3100	6000	9.2	15.0	3.9	19
322	88	100	5.3	1.2	C102_0093 EZ503U	138	240	9.326	3180/341	3600	3100	6000	8.3	15.0	3.9	19
322	109	130	6.5	1.0	C102_0093 EZ702U	138	240	9.326	3180/341	3600	3100	6000	14	15.0	3.9	22
363	22	24	1.5	4.6	C102_0083 EZ401U	68	240	8.263	1537/186	3600	3100	6000	1.7	15.0	3.9	15
363	34	38	2.3	3.0	C102_0083 EZ501U	128	240	8.263	1537/186	3600	3100	6000	3.6	15.0	3.9	16
363	38	42	2.5	2.8	C102_0083 EZ402U	128	240	8.263	1537/186	3600	3100	6000	2.4	15.0	3.9	16
363	55	69	3.7	1.9	C102_0083 EZ404U	138	240	8.263	1537/186	3600	3100	6000	3.7	15.0	3.9	18
363	59	64	4.0	1.8	C102_0083 EZ502U	138	240	8.263	1537/186	3600	3100	6000	5.9	15.0	3.9	17
363	59	67	4.0	1.8	C102_0083 EZ701U	138	240	8.263	1537/186	3600	3100	6000	9.2	15.0	3.9	19
363	78	89	5.2	1.3	C102_0083 EZ503U	138	240	8.263	1537/186	3600	3100	6000	8.3	15.0	3.9	19
363	96	115	6.4	1.1	C102_0083 EZ702U	138	240	8.263	1537/186	3600	3100	6000	14	15.0	3.9	22
385	12	13	1.9	3.8	C102_0078 EZ302U	38	57	7.796	3243/416	4000	3900	6500	0.54	18.0	3.1	13
385	16	17	2.5	2.9	C102_0078 EZ303U	45	57	7.796	3243/416	4000	3900	6500	0.65	18.0	3.1	14
385	21	23	1.8	4.1	C102_0078 EZ401U	64	209	7.796	3243/416	4000	3900	6500	1.2	18.0	3.1	15
385	33	36	2.7	2.7	C102_0078 EZ501U	121	209	7.796	3243/416	4000	3900	6500	3.1	18.0	3.1	16
385	36	39	2.9	2.4	C102_0078 EZ402U	121	209	7.796	3243/416	4000	3900	6500	1.9	18.0	3.1	16
385	52	65	4.3	1.7	C102_0078 EZ404U	130	209	7.796	3243/416	4000	3900	6500	3.2	18.0	3.1	18
385	56	60	4.6	1.5	C102_0078 EZ502U	130	209	7.796	3243/416	4000	3900	6500	5.4	18.0	3.1	17
385	56	63	4.6	1.5	C102_0078 EZ701U	130	220	7.796	3243/416	4000	3900	6500	8.7	18.0	3.1	19
385	73	84	6.1	1.2	C102_0078 EZ503U	130	209	7.796	3243/416	4000	3900	6500	7.8	18.0	3.1	19
473	9.8	10	2.1	3.8	C102_0063 EZ302U	31	46	6.338	507/80	3800	3500	6000	0.67	18.0	3.1	13
473	13	13	2.7	2.9	C102_0063 EZ303U	37	46	6.338	507/80	3800	3500	6000	0.78	18.0	3.1	14
473	17	18	1.7	4.7	C102_0063 EZ401U	52	184	6.338	507/80	3800	3500	6000	1.3	18.0	3.1	15
473	26	29	2.6	3.1	C102_0063 EZ501U	98	184	6.338	507/80	3800	3500	6000	3.3	18.0	3.1	16
473	29	32	2.8	2.8	C102_0063 EZ402U	98	184	6.338	507/80	3800	3500	6000	2.0	18.0	3.1	16
473	42	53	4.2	1.9	C102_0063 EZ404U	130	184	6.338	507/80	3800	3500	6000	3.4	18.0	3.1	18
473	45	49	4.5	1.8	C102_0063 EZ502U	130	184	6.338	507/80	3800	3500	6000	5.6	18.0	3.1	17
473	45	51	4.5	1.8	C102_0063 EZ701U	123	220	6.338	507/80	3800	3500	6000	8.9	18.0	3.1	19
473	60	68	5.9	1.4	C102_0063 EZ503U	130	184	6.338	507/80	3800	3500	6000	8.0	18.0	3.1	19
473	74	89	7.3	1.1	C102_0063 EZ702U	130	220	6.338	507/80	3800	3500	6000	14	18.0	3.1	22
511	9.1	9.6	2.2	3.8	C102_0059 EZ302U	28	43	5.875	47/8	3800	3500	6000	0.67	18.0	3.1	13
511	12	12	2.8	2.9	C102_0059 EZ303U	34	43	5.875	47/8	3800	3500	6000	0.78	18.0	3.1	14

n_{2N} [rpm]	M_{2N} [Nm]	$M_{2,0}$ [Nm]	a_{th}	S	Type	M_{2acc} [Nm]	M_{2NOT} [Nm]	i	i_{exakt}	n_{1maxDB} EL1,2,3,4 [rpm]	n_{1maxDB} EL5,6 [rpm]	n_{1maxZB} [rpm]	J_1 [kgcm²]	$\Delta\varphi_2$ [arcmin]	C_2 [Nm/arcmin]	m [kg]
C1 (n_{1N} = 3000 min^{-1}, $M_{2acc,max}$ = 140 Nm)																
511	16	17	1.7	4.9	C102_0059 EZ401U	48	171	5.875	47/8	3800	3500	6000	1.3	18.0	3.1	15
511	25	27	2.6	3.2	C102_0059 EZ501U	91	171	5.875	47/8	3800	3500	6000	3.3	18.0	3.1	16
511	27	30	2.8	2.9	C102_0059 EZ402U	91	171	5.875	47/8	3800	3500	6000	2.0	18.0	3.1	16
511	39	49	4.1	2.0	C102_0059 EZ404U	130	171	5.875	47/8	3800	3500	6000	3.4	18.0	3.1	18
511	42	46	4.4	1.9	C102_0059 EZ502U	130	171	5.875	47/8	3800	3500	6000	5.6	18.0	3.1	17
511	42	47	4.4	1.9	C102_0059 EZ701U	114	220	5.875	47/8	3800	3500	6000	8.9	18.0	3.1	19
511	55	63	5.8	1.4	C102_0059 EZ503U	130	171	5.875	47/8	3800	3500	6000	8.0	18.0	3.1	19
511	68	82	7.2	1.2	C102_0059 EZ702U	130	220	5.875	47/8	3800	3500	6000	14	18.0	3.1	22
511	77	91	8.1	1.0	C102_0059 EZ505U	130	220	5.875	47/8	3800	3500	6000	13	18.0	3.1	22
597	21	23	2.5	3.6	C102_0050 EZ501U	78	146	5.025	201/40	3800	3500	6000	3.4	18.0	3.1	16
597	23	25	2.7	3.3	C102_0050 EZ402U	78	146	5.025	201/40	3800	3500	6000	2.2	18.0	3.1	16
597	34	42	4.0	2.2	C102_0050 EZ404U	117	146	5.025	201/40	3800	3500	6000	3.5	18.0	3.1	18
597	36	39	4.3	2.1	C102_0050 EZ502U	117	146	5.025	201/40	3800	3500	6000	5.7	18.0	3.1	17
597	36	40	4.3	2.1	C102_0050 EZ701U	97	220	5.025	201/40	3800	3500	6000	9.0	18.0	3.1	19
597	47	54	5.6	1.6	C102_0050 EZ503U	117	146	5.025	201/40	3800	3500	6000	8.1	18.0	3.1	19
597	58	70	7.0	1.3	C102_0050 EZ702U	130	220	5.025	201/40	3800	3500	6000	14	18.0	3.1	22
597	66	78	7.9	1.1	C102_0050 EZ505U	130	220	5.025	201/40	3800	3500	6000	13	18.0	3.1	22
644	19	21	2.5	3.8	C102_0047 EZ501U	72	136	4.658	3149/676	3800	3500	6000	3.4	18.0	3.1	16
644	21	23	2.7	3.4	C102_0047 EZ402U	72	136	4.658	3149/676	3800	3500	6000	2.2	18.0	3.1	16
644	31	39	4.0	2.3	C102_0047 EZ404U	108	136	4.658	3149/676	3800	3500	6000	3.5	18.0	3.1	18
644	33	36	4.3	2.2	C102_0047 EZ502U	108	136	4.658	3149/676	3800	3500	6000	5.7	18.0	3.1	17
644	33	38	4.3	2.2	C102_0047 EZ701U	90	220	4.658	3149/676	3800	3500	6000	9.0	18.0	3.1	19
644	44	50	5.6	1.7	C102_0047 EZ503U	108	136	4.658	3149/676	3800	3500	6000	8.1	18.0	3.1	19
644	54	65	6.9	1.3	C102_0047 EZ702U	130	220	4.658	3149/676	3800	3500	6000	14	18.0	3.1	22
644	61	72	7.8	1.2	C102_0047 EZ505U	130	220	4.658	3149/676	3800	3500	6000	13	18.0	3.1	22
716	6.5	6.8	2.6	3.8	C102_0042 EZ302U	20	30	4.189	377/90	3600	3100	6000	0.99	18.0	3.1	13
716	8.4	8.9	3.4	2.9	C102_0042 EZ303U	24	30	4.189	377/90	3600	3100	6000	1.1	18.0	3.1	14
716	17	19	2.4	4.0	C102_0042 EZ501U	65	122	4.189	377/90	3600	3100	6000	3.6	18.0	3.1	16
716	19	21	2.7	3.7	C102_0042 EZ402U	65	122	4.189	377/90	3600	3100	6000	2.3	18.0	3.1	16
716	28	35	3.9	2.5	C102_0042 EZ404U	98	122	4.189	377/90	3600	3100	6000	3.7	18.0	3.1	18
716	30	33	4.2	2.3	C102_0042 EZ502U	98	122	4.189	377/90	3600	3100	6000	5.9	18.0	3.1	17
716	30	34	4.2	2.3	C102_0042 EZ701U	81	220	4.189	377/90	3600	3100	6000	9.2	18.0	3.1	19
716	39	45	5.5	1.8	C102_0042 EZ503U	98	122	4.189	377/90	3600	3100	6000	8.3	18.0	3.1	19
716	49	59	6.8	1.4	C102_0042 EZ702U	130	220	4.189	377/90	3600	3100	6000	14	18.0	3.1	22
716	55	65	7.6	1.3	C102_0042 EZ505U	130	220	4.189	377/90	3600	3100	6000	13	18.0	3.1	22
716	67	85	9.3	1.1	C102_0042 EZ703U	130	220	4.189	377/90	3600	3100	6000	22	18.0	3.1	24
773	6.0	6.3	2.7	3.8	C102_0039 EZ302U	19	28	3.883	1363/351	3600	3100	6000	1.0	18.0	3.1	13
773	7.8	8.2	3.5	2.9	C102_0039 EZ303U	23	28	3.883	1363/351	3600	3100	6000	1.1	18.0	3.1	14
773	16	18	2.4	4.2	C102_0039 EZ501U	60	113	3.883	1363/351	3600	3100	6000	3.6	18.0	3.1	16
773	18	20	2.6	3.9	C102_0039 EZ402U	60	113	3.883	1363/351	3600	3100	6000	2.3	18.0	3.1	16
773	26	32	3.8	2.6	C102_0039 EZ404U	90	113	3.883	1363/351	3600	3100	6000	3.7	18.0	3.1	18
773	28	30	4.1	2.5	C102_0039 EZ502U	90	113	3.883	1363/351	3600	3100	6000	5.9	18.0	3.1	17
773	28	31	4.1	2.5	C102_0039 EZ701U	75	220	3.883	1363/351	3600	3100	6000	9.2	18.0	3.1	19
773	37	42	5.4	1.9	C102_0039 EZ503U	90	113	3.883	1363/351	3600	3100	6000	8.3	18.0	3.1	19
773	45	54	6.7	1.5	C102_0039 EZ702U	130	220	3.883	1363/351	3600	3100	6000	14	18.0	3.1	22
773	51	60	7.5	1.3	C102_0039 EZ505U	130	220	3.883	1363/351	3600	3100	6000	13	18.0	3.1	22
773	62	78	9.2	1.1	C102_0039 EZ703U	130	220	3.883	1363/351	3600	3100	6000	22	18.0	3.1	24
900	14	15	2.3	4.7	C102_0033 EZ501U	52	97	3.334	2067/620	3600	3100	6000	3.9	18.0	3.1	16
900	15	17	2.6	4.3	C102_0033 EZ402U	52	97	3.334	2067/620	3600	3100	6000	2.6	18.0	3.1	16
900	22	28	3.7	2.9	C102_0033 EZ404U	78	97	3.334	2067/620	3600	3100	6000	4.0	18.0	3.1	18
900	24	26	4.0	2.7	C102_0033 EZ502U	78	97	3.334	2067/620	3600	3100	6000	6.2	18.0	3.1	17
900	24	27	4.0	2.7	C102_0033 EZ701U	65	220	3.334	2067/620	3600	3100	6000	9.5	18.0	3.1	19
900	31	36	5.3	2.1	C102_0033 EZ503U	78	97	3.334	2067/620	3600	3100	6000	8.6	18.0	3.1	19
900	39	47	6.5	1.7	C102_0033 EZ702U	123	220	3.334	2067/620	3600	3100	6000	15	18.0	3.1	22
900	44	52	7.3	1.5	C102_0033 EZ505U	123	220	3.334	2067/620	3600	3100	6000	13	18.0	3.1	22
900	53	67	9.0	1.2	C102_0033 EZ703U	123	220	3.334	2067/620	3600	3100	6000	23	18.0	3.1	24
971	13	14	2.3	4.9	C102_0031 EZ501U	48	90	3.091	2491/806	3600	3100	6000	3.9	18.0	3.1	16
971	14	16	2.5	4.5	C102_0031 EZ402U	48	90	3.091	2491/806	3600	3100	6000	2.6	18.0	3.1	16
971	21	26	3.7	3.1	C102_0031 EZ404U	72	90	3.091	2491/806	3600	3100	6000	4.0	18.0	3.1	18
971	22	24	4.0	2.9	C102_0031 EZ502U	72	90	3.091	2491/806	3600	3100	6000	6.2	18.0	3.1	17
971	22	25	4.0	2.9	C102_0031 EZ701U	60	220	3.091	2491/806	3600	3100	6000	9.5	18.0	3.1	19
971	29	33	5.2	2.2	C102_0031 EZ503U	72	90	3.091	2491/806	3600	3100	6000	8.6	18.0	3.1	19
971	36	43	6.4	1.8	C102_0031 EZ702U	120	220	3.091	2491/806	3600	3100	6000	15	18.0	3.1	22
971	40	48	7.2	1.6	C102_0031 EZ505U	120	220	3.091	2491/806	3600	3100	6000	13	18.0	3.1	22

n_{2N} [rpm]	M_{2N} [Nm]	$M_{2,0}$ [Nm]	a_{th}	S	Type	M_{2acc} [Nm]	M_{2NOT} [Nm]	i	i_{exakt}	n_{1maxDB} EL1,2,3,4 [rpm]	n_{1maxDB} EL5,6 [rpm]	n_{1maxZB} [rpm]	J_1 [kgcm²]	$\Delta\varphi_2$ [arcmin]	C_2 [Nm/arcmin]	m [kg]
C1 (n_{1N} = 3000 min^{-1}, $M_{2acc,max}$ = 140 Nm)																
971	49	62	8.9	1.3	C102_0031 EZ703U	120	220	3.091	2491/806	3600	3100	6000	23	18.0	3.1	24
1162	19	21	3.9	3.2	C102_0026 EZ701U	50	188	2.582	1911/740	3100	2600	5000	10	18.0	3.1	19
1162	30	36	6.2	2.0	C102_0026 EZ702U	103	188	2.582	1911/740	3100	2600	5000	15	18.0	3.1	22
1162	34	40	7.0	1.8	C102_0026 EZ505U	113	188	2.582	1911/740	3100	2600	5000	14	18.0	3.1	22
1162	41	52	8.6	1.4	C102_0026 EZ703U	113	188	2.582	1911/740	3100	2600	5000	23	18.0	3.1	24
1253	17	19	3.8	3.4	C102_0024 EZ701U	46	174	2.394	2303/962	3100	2600	5000	10	18.0	3.1	19
1253	28	33	6.2	2.1	C102_0024 EZ702U	95	174	2.394	2303/962	3100	2600	5000	15	18.0	3.1	22
1253	31	37	6.9	1.9	C102_0024 EZ505U	110	174	2.394	2303/962	3100	2600	5000	14	18.0	3.1	22
1253	38	48	8.5	1.5	C102_0024 EZ703U	110	174	2.394	2303/962	3100	2600	5000	23	18.0	3.1	24
1378	15	18	3.9	3.5	C102_0022 EZ404U	51	63	2.177	468/215	3100	2600	5000	4.8	18.0	3.1	18
1378	16	17	4.2	3.2	C102_0022 EZ502U	51	63	2.177	468/215	3100	2600	5000	7.0	18.0	3.1	17
1378	16	18	3.7	3.6	C102_0022 EZ701U	42	158	2.177	468/215	3100	2600	5000	10	18.0	3.1	19
1378	20	23	5.5	2.5	C102_0022 EZ503U	51	63	2.177	468/215	3100	2600	5000	9.4	18.0	3.1	19
1378	25	30	6.1	2.2	C102_0022 EZ702U	87	158	2.177	468/215	3100	2600	5000	16	18.0	3.1	22
1378	29	34	6.8	2.0	C102_0022 EZ505U	107	158	2.177	468/215	3100	2600	5000	14	18.0	3.1	22
1378	35	44	8.3	1.6	C102_0022 EZ703U	107	158	2.177	468/215	3100	2600	5000	23	18.0	3.1	24
1487	14	17	4.0	3.5	C102_0020 EZ404U	47	59	2.018	1128/559	3100	2600	5000	4.9	18.0	3.1	18
1487	14	16	4.3	3.2	C102_0020 EZ502U	47	59	2.018	1128/559	3100	2600	5000	7.1	18.0	3.1	17
1487	14	16	3.7	3.8	C102_0020 EZ701U	39	147	2.018	1128/559	3100	2600	5000	10	18.0	3.1	19
1487	19	22	5.7	2.5	C102_0020 EZ503U	47	59	2.018	1128/559	3100	2600	5000	9.5	18.0	3.1	19
1487	23	28	6.0	2.3	C102_0020 EZ702U	80	147	2.018	1128/559	3100	2600	5000	16	18.0	3.1	22
1487	26	31	6.7	2.1	C102_0020 EZ505U	104	147	2.018	1128/559	3100	2600	5000	14	18.0	3.1	22
1487	32	41	8.2	1.7	C102_0020 EZ703U	104	147	2.018	1128/559	3100	2600	5000	24	18.0	3.1	24
C1 (n_{1N} = 4500 min^{-1}, $M_{2acc,max}$ = 140 Nm)																
433	96	154	6.0	1.0	C102_0105 EZ505U	138	240	10.38	841/81	3600	3100	6000	13	15.0	3.9	22
483	86	138	5.9	1.1	C102_0093 EZ505U	138	240	9.326	3180/341	3600	3100	6000	13	15.0	3.9	22
545	76	123	5.8	1.2	C102_0083 EZ505U	138	240	8.263	1537/186	3600	3100	6000	13	15.0	3.9	22
577	72	116	6.8	1.1	C102_0078 EZ505U	130	220	7.796	3243/416	4000	3900	6500	12	18.0	3.1	22
710	58	94	6.6	1.2	C102_0063 EZ505U	130	220	6.338	507/80	3800	3500	6000	13	18.0	3.1	22
766	54	87	6.5	1.3	C102_0059 EZ505U	130	220	5.875	47/8	3800	3500	6000	13	18.0	3.1	22
896	46	75	6.3	1.4	C102_0050 EZ505U	130	220	5.025	201/40	3800	3500	6000	13	18.0	3.1	22
896	59	97	8.1	1.1	C102_0050 EZ703U	130	220	5.025	201/40	3800	3500	6000	22	18.0	3.1	24
966	43	69	6.2	1.5	C102_0047 EZ505U	130	220	4.658	3149/676	3800	3500	6000	13	18.0	3.1	22
966	55	90	8.0	1.2	C102_0047 EZ703U	130	220	4.658	3149/676	3800	3500	6000	22	18.0	3.1	24
1074	39	62	6.1	1.6	C102_0042 EZ505U	130	220	4.189	377/90	3600	3100	6000	13	18.0	3.1	22
1074	49	81	7.8	1.3	C102_0042 EZ703U	130	220	4.189	377/90	3600	3100	6000	22	18.0	3.1	24
1159	36	58	6.1	1.7	C102_0039 EZ505U	130	220	3.883	1363/351	3600	3100	6000	13	18.0	3.1	22
1159	46	75	7.7	1.3	C102_0039 EZ703U	130	220	3.883	1363/351	3600	3100	6000	22	18.0	3.1	24
1350	31	49	5.9	1.9	C102_0033 EZ505U	123	220	3.334	2067/620	3600	3100	6000	13	18.0	3.1	22
1350	39	65	7.5	1.5	C102_0033 EZ703U	123	220	3.334	2067/620	3600	3100	6000	23	18.0	3.1	24
1456	28	46	5.8	2.0	C102_0031 EZ505U	120	220	3.091	2491/806	3600	3100	6000	13	18.0	3.1	22
1456	36	60	7.4	1.5	C102_0031 EZ703U	120	220	3.091	2491/806	3600	3100	6000	23	18.0	3.1	24
1743	24	38	5.7	2.2	C102_0026 EZ505U	113	188	2.582	1911/740	3100	2600	5000	14	18.0	3.1	22
1743	30	50	7.2	1.7	C102_0026 EZ703U	113	188	2.582	1911/740	3100	2600	5000	23	18.0	3.1	24
1880	22	36	5.6	2.3	C102_0024 EZ505U	110	174	2.394	2303/962	3100	2600	5000	14	18.0	3.1	22
1880	28	46	7.1	1.8	C102_0024 EZ703U	110	174	2.394	2303/962	3100	2600	5000	23	18.0	3.1	24
2067	20	32	5.5	2.5	C102_0022 EZ505U	107	158	2.177	468/215	3100	2600	5000	14	18.0	3.1	22
2067	26	42	7.0	1.9	C102_0022 EZ703U	107	158	2.177	468/215	3100	2600	5000	23	18.0	3.1	24
2230	19	30	5.4	2.6	C102_0020 EZ505U	104	147	2.018	1128/559	3100	2600	5000	14	18.0	3.1	22
2230	24	39	6.9	2.0	C102_0020 EZ703U	104	147	2.018	1128/559	3100	2600	5000	24	18.0	3.1	24
C1 (n_{1N} = 6000 min^{-1}, $M_{2acc,max}$ = 140 Nm)																
44	117	125	1.7	1.0	C103_1370 EZ301U	138	240	137.3	10575/77	4000	3900	6500	0.24	15.0	3.9	15
54	95	101	1.5	1.3	C103_1110 EZ301U	138	240	111.1	1222/11	4000	3900	6500	0.25	15.0	3.9	15
65	78	84	1.4	1.5	C103_0920 EZ301U	138	240	92.13	16215/176	4000	3900	6500	0.25	15.0	3.9	15
73	69	74	1.3	1.7	C103_0820 EZ301U	138	240	81.64	31349/384	4000	3900	6500	0.25	15.0	3.9	15
73	117	131	2.2	1.0	C103_0820 EZ302U	138	240	81.64	31349/384	4000	3900	6500	0.35	15.0	3.9	16
85	61	65	1.2	2.0	C102_0700 EZ301U	138	240	70.46	775/11	4000	3900	6500	0.22	15.0	3.9	12
85	103	115	2.0	1.2	C102_0700 EZ302U	138	240	70.46	775/11	4000	3900	6500	0.32	15.0	3.9	13
96	54	58	1.1	2.2	C102_0620 EZ301U	138	228	62.43	4495/72	4000	3900	6500	0.22	15.0	3.9	12
96	91	102	1.9	1.3	C102_0620 EZ302U	138	228	62.43	4495/72	4000	3900	6500	0.32	15.0	3.9	13
96	119	136	2.5	1.0	C102_0620 EZ303U	138	228	62.43	4495/72	4000	3900	6500	0.43	15.0	3.9	14
106	49	52	1.1	2.5	C102_0560 EZ301U	138	240	56.36	620/11	4000	3900	6500	0.24	15.0	3.9	12
106	82	92	1.8	1.5	C102_0560 EZ302U	138	240	56.36	620/11	4000	3900	6500	0.34	15.0	3.9	13
106	107	123	2.4	1.1	C102_0560 EZ303U	138	240	56.36	620/11	4000	3900	6500	0.45	15.0	3.9	14

n_{2N} [rpm]	M_{2N} [Nm]	$M_{2,0}$ [Nm]	a_{th}	S	Type	M_{2acc} [Nm]	M_{2NOT} [Nm]	i	i_{exakt}	n_{1maxDB} EL1,2,3,4 [rpm]	n_{1maxDB} EL5,6 [rpm]	n_{1maxZB} [rpm]	J_1 [kgcm²]	$\Delta\varphi_2$ [arcmin]	C_2 [Nm/arcmin]	m [kg]
C1 (n_{1N} = 6000 min^{-1}, $M_{2acc,max}$ = 140 Nm)																
120	43	46	1.0	2.8	C102_0500 EZ301U	136	240	49.94	899/18	4000	3900	6500	0.24	15.0	3.9	12
120	73	81	1.7	1.7	C102_0500 EZ302U	138	240	49.94	899/18	4000	3900	6500	0.34	15.0	3.9	13
120	95	109	2.2	1.3	C102_0500 EZ303U	138	240	49.94	899/18	4000	3900	6500	0.45	15.0	3.9	14
120	111	136	2.6	1.1	C102_0500 EZ401U	138	240	49.94	899/18	4000	3900	6500	0.98	15.0	3.9	15
128	40	43	1.0	3.0	C102_0470 EZ301U	127	240	46.91	516/11	4000	3900	6500	0.26	15.0	3.9	12
128	68	76	1.7	1.8	C102_0470 EZ302U	138	240	46.91	516/11	4000	3900	6500	0.36	15.0	3.9	13
128	89	102	2.2	1.3	C102_0470 EZ303U	138	240	46.91	516/11	4000	3900	6500	0.47	15.0	3.9	14
128	105	127	2.5	1.1	C102_0470 EZ401U	138	240	46.91	516/11	4000	3900	6500	1.0	15.0	3.9	15
144	36	38	0.9	3.3	C102_0420 EZ301U	113	232	41.57	1247/30	4000	3900	6500	0.26	15.0	3.9	12
144	60	68	1.6	2.0	C102_0420 EZ302U	138	232	41.57	1247/30	4000	3900	6500	0.36	15.0	3.9	13
144	79	91	2.0	1.5	C102_0420 EZ303U	138	232	41.57	1247/30	4000	3900	6500	0.47	15.0	3.9	14
144	93	113	2.4	1.3	C102_0420 EZ401U	138	240	41.57	1247/30	4000	3900	6500	1.0	15.0	3.9	15
171	30	32	0.9	4.0	C102_0350 EZ301U	95	217	35.07	2700/77	4000	3900	6500	0.30	15.0	3.9	12
171	51	57	1.4	2.4	C102_0350 EZ302U	138	217	35.07	2700/77	4000	3900	6500	0.40	15.0	3.9	13
171	67	77	1.9	1.8	C102_0350 EZ303U	138	217	35.07	2700/77	4000	3900	6500	0.51	15.0	3.9	14
171	78	95	2.2	1.5	C102_0350 EZ401U	138	240	35.07	2700/77	4000	3900	6500	1.0	15.0	3.9	15
171	116	150	3.3	1.0	C102_0350 EZ501U	138	240	35.07	2700/77	4000	3900	6500	3.0	15.0	3.9	16
171	119	167	3.4	1.0	C102_0350 EZ402U	138	240	35.07	2700/77	4000	3900	6500	1.7	15.0	3.9	16
193	27	29	0.8	4.5	C102_0310 EZ301U	84	193	31.07	435/14	4000	3900	6500	0.30	15.0	3.9	12
193	45	51	1.4	2.7	C102_0310 EZ302U	138	193	31.07	435/14	4000	3900	6500	0.40	15.0	3.9	13
193	59	68	1.8	2.0	C102_0310 EZ303U	138	193	31.07	435/14	4000	3900	6500	0.51	15.0	3.9	14
193	69	84	2.1	1.7	C102_0310 EZ401U	138	240	31.07	435/14	4000	3900	6500	1.0	15.0	3.9	15
193	102	133	3.1	1.2	C102_0310 EZ501U	138	240	31.07	435/14	4000	3900	6500	3.0	15.0	3.9	16
193	105	148	3.2	1.1	C102_0310 EZ402U	138	240	31.07	435/14	4000	3900	6500	1.7	15.0	3.9	16
212	63	77	2.0	1.9	C102_0280 EZ401U	138	240	28.36	312/11	4000	3900	6500	1.1	15.0	3.9	15
212	94	121	2.9	1.3	C102_0280 EZ501U	138	240	28.36	312/11	4000	3900	6500	3.1	15.0	3.9	16
212	96	135	3.0	1.2	C102_0280 EZ402U	138	240	28.36	312/11	4000	3900	6500	1.8	15.0	3.9	16
239	56	68	1.9	2.1	C102_0250 EZ401U	138	240	25.13	377/15	4000	3900	6500	1.1	15.0	3.9	15
239	83	107	2.8	1.4	C102_0250 EZ501U	138	240	25.13	377/15	4000	3900	6500	3.1	15.0	3.9	16
239	85	119	2.8	1.4	C102_0250 EZ402U	138	240	25.13	377/15	4000	3900	6500	1.8	15.0	3.9	16
255	34	38	1.2	3.4	C102_0240 EZ302U	114	171	23.52	1035/44	4000	3900	6500	0.49	15.0	3.9	13
255	45	51	1.6	2.6	C102_0240 EZ303U	137	171	23.52	1035/44	4000	3900	6500	0.60	15.0	3.9	14
255	52	64	1.8	2.2	C102_0240 EZ401U	138	240	23.52	1035/44	4000	3900	6500	1.1	15.0	3.9	15
255	78	100	2.7	1.5	C102_0240 EZ501U	138	240	23.52	1035/44	4000	3900	6500	3.1	15.0	3.9	16
255	80	112	2.8	1.5	C102_0240 EZ402U	138	240	23.52	1035/44	4000	3900	6500	1.8	15.0	3.9	16
288	30	34	1.2	3.7	C102_0210 EZ302U	101	152	20.84	667/32	4000	3900	6500	0.49	15.0	3.9	13
288	40	45	1.5	2.8	C102_0210 EZ303U	121	152	20.84	667/32	4000	3900	6500	0.60	15.0	3.9	14
288	47	57	1.8	2.4	C102_0210 EZ401U	138	240	20.84	667/32	4000	3900	6500	1.1	15.0	3.9	15
288	69	89	2.7	1.6	C102_0210 EZ501U	138	240	20.84	667/32	4000	3900	6500	3.1	15.0	3.9	16
288	71	99	2.8	1.6	C102_0210 EZ402U	138	240	20.84	667/32	4000	3900	6500	1.8	15.0	3.9	16
288	105	158	4.1	1.1	C102_0210 EZ502U	138	240	20.84	667/32	4000	3900	6500	5.4	15.0	3.9	17
288	105	160	4.1	1.1	C102_0210 EZ701U	138	240	20.84	667/32	4000	3900	6500	8.7	15.0	3.9	19
338	26	29	1.2	4.0	C102_0175 EZ302U	86	129	17.73	195/11	3800	3500	6000	0.59	15.0	3.9	13
338	34	39	1.6	3.1	C102_0175 EZ303U	103	129	17.73	195/11	3800	3500	6000	0.70	15.0	3.9	14
338	40	48	1.8	2.7	C102_0175 EZ401U	138	240	17.73	195/11	3800	3500	6000	1.2	15.0	3.9	15
338	58	76	2.6	1.8	C102_0175 EZ501U	138	240	17.73	195/11	3800	3500	6000	3.2	15.0	3.9	16
338	60	84	2.7	1.8	C102_0175 EZ402U	138	240	17.73	195/11	3800	3500	6000	1.9	15.0	3.9	16
338	89	134	4.0	1.2	C102_0175 EZ502U	138	240	17.73	195/11	3800	3500	6000	5.5	15.0	3.9	17
338	89	136	4.0	1.2	C102_0175 EZ701U	138	240	17.73	195/11	3800	3500	6000	8.8	15.0	3.9	19
338	100	144	4.4	1.1	C102_0175 EZ404U	138	240	17.73	195/11	3800	3500	6000	3.3	15.0	3.9	18
338	107	182	4.7	1.0	C102_0175 EZ503U	138	240	17.73	195/11	3800	3500	6000	7.9	15.0	3.9	19
382	23	26	1.3	4.0	C102_0155 EZ302U	76	114	15.71	377/24	3800	3500	6000	0.60	15.0	3.9	13
382	30	34	1.6	3.1	C102_0155 EZ303U	91	114	15.71	377/24	3800	3500	6000	0.71	15.0	3.9	14
382	35	43	1.7	2.9	C102_0155 EZ401U	130	240	15.71	377/24	3800	3500	6000	1.2	15.0	3.9	15
382	52	67	2.6	2.0	C102_0155 EZ501U	138	240	15.71	377/24	3800	3500	6000	3.2	15.0	3.9	16
382	53	75	2.6	1.9	C102_0155 EZ402U	138	240	15.71	377/24	3800	3500	6000	1.9	15.0	3.9	16
382	79	119	3.9	1.3	C102_0155 EZ502U	138	240	15.71	377/24	3800	3500	6000	5.5	15.0	3.9	17
382	79	120	3.9	1.3	C102_0155 EZ701U	138	240	15.71	377/24	3800	3500	6000	8.8	15.0	3.9	19
382	88	128	4.4	1.2	C102_0155 EZ404U	138	240	15.71	377/24	3800	3500	6000	3.3	15.0	3.9	18
382	94	162	4.7	1.1	C102_0155 EZ503U	138	240	15.71	377/24	3800	3500	6000	7.9	15.0	3.9	19
427	31	38	1.7	3.2	C102_0140 EZ401U	116	240	14.06	2010/143	3800	3500	6000	1.3	15.0	3.9	15
427	46	60	2.5	2.1	C102_0140 EZ501U	138	240	14.06	2010/143	3800	3500	6000	3.3	15.0	3.9	16
427	48	67	2.6	2.1	C102_0140 EZ402U	138	240	14.06	2010/143	3800	3500	6000	2.0	15.0	3.9	16
427	71	106	3.8	1.4	C102_0140 EZ502U	138	240	14.06	2010/143	3800	3500	6000	5.6	15.0	3.9	17

n_{2N} [rpm]	M_{2N} [Nm]	$M_{2,0}$ [Nm]	a_{th}	S	Type	M_{2acc} [Nm]	M_{2NOT} [Nm]	i	i_{exakt}	n_{1maxDB} EL1,2,3,4 [rpm]	n_{1maxDB} EL5,6 [rpm]	n_{1maxZB} [rpm]	J_1 [kgcm²]	$\Delta\varphi_2$ [arcmin]	C_2 [Nm/arcmin]	m [kg]
C1 (n_{1N} = 6000 min^{-1}, $M_{2acc,max}$ = 140 Nm)																
427	71	108	3.8	1.4	C102_0140 EZ701U	138	240	14.06	2010/143	3800	3500	6000	8.9	15.0	3.9	19
427	79	115	4.3	1.2	C102_0140 EZ404U	138	240	14.06	2010/143	3800	3500	6000	3.4	15.0	3.9	18
427	85	145	4.6	1.2	C102_0140 EZ503U	138	240	14.06	2010/143	3800	3500	6000	8.0	15.0	3.9	19
427	98	195	5.3	1.0	C102_0140 EZ702U	138	240	14.06	2010/143	3800	3500	6000	14	15.0	3.9	22
482	28	34	1.7	3.4	C102_0125 EZ401U	103	240	12.46	1943/156	3800	3500	6000	1.3	15.0	3.9	15
482	41	53	2.5	2.3	C102_0125 EZ501U	138	240	12.46	1943/156	3800	3500	6000	3.3	15.0	3.9	16
482	42	59	2.5	2.2	C102_0125 EZ402U	138	240	12.46	1943/156	3800	3500	6000	2.0	15.0	3.9	16
482	63	94	3.8	1.5	C102_0125 EZ502U	138	240	12.46	1943/156	3800	3500	6000	5.6	15.0	3.9	17
482	63	95	3.8	1.5	C102_0125 EZ701U	138	240	12.46	1943/156	3800	3500	6000	8.9	15.0	3.9	19
482	70	101	4.2	1.4	C102_0125 EZ404U	138	240	12.46	1943/156	3800	3500	6000	3.4	15.0	3.9	18
482	75	128	4.5	1.3	C102_0125 EZ503U	138	240	12.46	1943/156	3800	3500	6000	8.0	15.0	3.9	19
482	87	173	5.2	1.1	C102_0125 EZ702U	138	240	12.46	1943/156	3800	3500	6000	14	15.0	3.9	22
512	17	19	1.5	4.0	C102_0115 EZ302U	57	85	11.72	1160/99	3600	3100	6000	0.82	15.0	3.9	13
512	22	26	1.9	3.1	C102_0115 EZ303U	68	85	11.72	1160/99	3600	3100	6000	0.93	15.0	3.9	14
512	26	32	1.6	3.6	C102_0115 EZ401U	97	240	11.72	1160/99	3600	3100	6000	1.5	15.0	3.9	15
512	39	50	2.4	2.4	C102_0115 EZ501U	138	240	11.72	1160/99	3600	3100	6000	3.4	15.0	3.9	16
512	40	56	2.5	2.3	C102_0115 EZ402U	138	240	11.72	1160/99	3600	3100	6000	2.2	15.0	3.9	16
512	59	89	3.7	1.6	C102_0115 EZ502U	138	240	11.72	1160/99	3600	3100	6000	5.7	15.0	3.9	17
512	59	90	3.7	1.6	C102_0115 EZ701U	138	240	11.72	1160/99	3600	3100	6000	9.0	15.0	3.9	19
512	66	95	4.1	1.4	C102_0115 EZ404U	138	240	11.72	1160/99	3600	3100	6000	3.5	15.0	3.9	18
512	70	120	4.4	1.3	C102_0115 EZ503U	138	240	11.72	1160/99	3600	3100	6000	8.1	15.0	3.9	19
512	82	163	5.1	1.1	C102_0115 EZ702U	138	240	11.72	1160/99	3600	3100	6000	14	15.0	3.9	22
578	15	17	1.6	4.0	C102_0105 EZ302U	50	76	10.38	841/81	3600	3100	6000	0.83	15.0	3.9	13
578	20	23	2.0	3.1	C102_0105 EZ303U	60	76	10.38	841/81	3600	3100	6000	0.94	15.0	3.9	14
578	23	28	1.6	3.9	C102_0105 EZ401U	86	240	10.38	841/81	3600	3100	6000	1.5	15.0	3.9	15
578	34	44	2.4	2.6	C102_0105 EZ501U	138	240	10.38	841/81	3600	3100	6000	3.4	15.0	3.9	16
578	35	49	2.4	2.5	C102_0105 EZ402U	138	240	10.38	841/81	3600	3100	6000	2.2	15.0	3.9	16
578	52	79	3.6	1.7	C102_0105 EZ502U	138	240	10.38	841/81	3600	3100	6000	5.7	15.0	3.9	17
578	52	80	3.6	1.7	C102_0105 EZ701U	138	240	10.38	841/81	3600	3100	6000	9.0	15.0	3.9	19
578	58	85	4.1	1.5	C102_0105 EZ404U	138	240	10.38	841/81	3600	3100	6000	3.5	15.0	3.9	18
578	62	107	4.3	1.4	C102_0105 EZ503U	138	240	10.38	841/81	3600	3100	6000	8.1	15.0	3.9	19
578	73	144	5.0	1.2	C102_0105 EZ702U	138	240	10.38	841/81	3600	3100	6000	14	15.0	3.9	22
643	21	25	1.6	4.1	C102_0093 EZ401U	77	240	9.326	3180/341	3600	3100	6000	1.6	15.0	3.9	15
643	31	40	2.3	2.8	C102_0093 EZ501U	138	240	9.326	3180/341	3600	3100	6000	3.6	15.0	3.9	16
643	32	44	2.4	2.7	C102_0093 EZ402U	138	240	9.326	3180/341	3600	3100	6000	2.3	15.0	3.9	16
643	47	71	3.6	1.8	C102_0093 EZ502U	138	240	9.326	3180/341	3600	3100	6000	5.9	15.0	3.9	17
643	47	71	3.6	1.8	C102_0093 EZ701U	138	240	9.326	3180/341	3600	3100	6000	9.2	15.0	3.9	19
643	52	76	4.0	1.6	C102_0093 EZ404U	138	240	9.326	3180/341	3600	3100	6000	3.7	15.0	3.9	18
643	56	96	4.3	1.5	C102_0093 EZ503U	138	240	9.326	3180/341	3600	3100	6000	8.3	15.0	3.9	19
643	65	129	5.0	1.3	C102_0093 EZ702U	138	240	9.326	3180/341	3600	3100	6000	14	15.0	3.9	22
726	18	22	1.6	4.5	C102_0083 EZ401U	68	240	8.263	1537/186	3600	3100	6000	1.7	15.0	3.9	15
726	27	35	2.3	3.0	C102_0083 EZ501U	128	240	8.263	1537/186	3600	3100	6000	3.6	15.0	3.9	16
726	28	39	2.4	3.0	C102_0083 EZ402U	128	240	8.263	1537/186	3600	3100	6000	2.4	15.0	3.9	16
726	42	63	3.5	2.0	C102_0083 EZ502U	138	240	8.263	1537/186	3600	3100	6000	5.9	15.0	3.9	17
726	42	63	3.5	2.0	C102_0083 EZ701U	138	240	8.263	1537/186	3600	3100	6000	9.2	15.0	3.9	19
726	46	67	3.9	1.8	C102_0083 EZ404U	138	240	8.263	1537/186	3600	3100	6000	3.7	15.0	3.9	18
726	50	85	4.2	1.7	C102_0083 EZ503U	138	240	8.263	1537/186	3600	3100	6000	8.3	15.0	3.9	19
726	58	115	4.9	1.4	C102_0083 EZ702U	138	240	8.263	1537/186	3600	3100	6000	14	15.0	3.9	22
770	11	13	1.8	4.0	C102_0078 EZ302U	38	57	7.796	3243/416	4000	3900	6500	0.54	18.0	3.1	13
770	15	17	2.3	3.1	C102_0078 EZ303U	45	57	7.796	3243/416	4000	3900	6500	0.65	18.0	3.1	14
770	17	21	1.8	4.0	C102_0078 EZ401U	64	209	7.796	3243/416	4000	3900	6500	1.2	18.0	3.1	15
770	26	33	2.7	2.7	C102_0078 EZ501U	121	209	7.796	3243/416	4000	3900	6500	3.1	18.0	3.1	16
770	26	37	2.8	2.6	C102_0078 EZ402U	121	209	7.796	3243/416	4000	3900	6500	1.9	18.0	3.1	16
770	39	59	4.1	1.7	C102_0078 EZ502U	130	209	7.796	3243/416	4000	3900	6500	5.4	18.0	3.1	17
770	39	60	4.1	1.7	C102_0078 EZ701U	130	220	7.796	3243/416	4000	3900	6500	8.7	18.0	3.1	19
770	44	64	4.6	1.6	C102_0078 EZ404U	130	209	7.796	3243/416	4000	3900	6500	3.2	18.0	3.1	18
770	47	80	4.9	1.5	C102_0078 EZ503U	130	209	7.796	3243/416	4000	3900	6500	7.8	18.0	3.1	19
770	54	108	5.7	1.3	C102_0078 EZ702U	130	220	7.796	3243/416	4000	3900	6500	14	18.0	3.1	22
947	9.2	10	2.0	4.0	C102_0063 EZ302U	31	46	6.338	507/80	3800	3500	6000	0.67	18.0	3.1	13
947	12	14	2.6	3.1	C102_0063 EZ303U	37	46	6.338	507/80	3800	3500	6000	0.78	18.0	3.1	14
947	14	17	1.8	4.5	C102_0063 EZ401U	52	184	6.338	507/80	3800	3500	6000	1.3	18.0	3.1	15
947	21	27	2.6	3.1	C102_0063 EZ501U	98	184	6.338	507/80	3800	3500	6000	3.3	18.0	3.1	16
947	22	30	2.7	3.0	C102_0063 EZ402U	98	184	6.338	507/80	3800	3500	6000	2.0	18.0	3.1	16
947	32	48	4.0	2.0	C102_0063 EZ502U	130	184	6.338	507/80	3800	3500	6000	5.6	18.0	3.1	17

n_{2N} [rpm]	M_{2N} [Nm]	$M_{2,0}$ [Nm]	a_{th}	S	Type	M_{2acc} [Nm]	M_{2NOT} [Nm]	i	i_{exakt}	n_{1maxDB} EL1,2,3,4 [rpm]	n_{1maxDB} EL5,6 [rpm]	n_{1maxZB} [rpm]	J_1 [kgcm²]	$\Delta\varphi_2$ [arcmin]	C_2 [Nm/arcmin]	m [kg]
C1 (n_{1N} = 6000 min^{-1}, $M_{2acc,max}$ = 140 Nm)																
947	32	49	4.0	2.0	C102_0063 EZ701U	123	220	6.338	507/80	3800	3500	6000	8.9	18.0	3.1	19
947	36	52	4.4	1.8	C102_0063 EZ404U	130	184	6.338	507/80	3800	3500	6000	3.4	18.0	3.1	18
947	38	65	4.7	1.7	C102_0063 EZ503U	130	184	6.338	507/80	3800	3500	6000	8.0	18.0	3.1	19
947	44	88	5.5	1.4	C102_0063 EZ702U	130	220	6.338	507/80	3800	3500	6000	14	18.0	3.1	22
1021	8.5	9.6	2.1	4.0	C102_0059 EZ302U	28	43	5.875	47/8	3800	3500	6000	0.67	18.0	3.1	13
1021	11	13	2.7	3.1	C102_0059 EZ303U	34	43	5.875	47/8	3800	3500	6000	0.78	18.0	3.1	14
1021	13	16	1.7	4.8	C102_0059 EZ401U	48	171	5.875	47/8	3800	3500	6000	1.3	18.0	3.1	15
1021	19	25	2.6	3.2	C102_0059 EZ501U	91	171	5.875	47/8	3800	3500	6000	3.3	18.0	3.1	16
1021	20	28	2.6	3.1	C102_0059 EZ402U	91	171	5.875	47/8	3800	3500	6000	2.0	18.0	3.1	16
1021	30	44	3.9	2.1	C102_0059 EZ502U	130	171	5.875	47/8	3800	3500	6000	5.6	18.0	3.1	17
1021	30	45	3.9	2.1	C102_0059 EZ701U	114	220	5.875	47/8	3800	3500	6000	8.9	18.0	3.1	19
1021	33	48	4.4	1.9	C102_0059 EZ404U	130	171	5.875	47/8	3800	3500	6000	3.4	18.0	3.1	18
1021	35	60	4.7	1.8	C102_0059 EZ503U	130	171	5.875	47/8	3800	3500	6000	8.0	18.0	3.1	19
1021	41	81	5.4	1.5	C102_0059 EZ702U	130	220	5.875	47/8	3800	3500	6000	14	18.0	3.1	22
1194	17	21	2.5	3.6	C102_0050 EZ501U	78	146	5.025	201/40	3800	3500	6000	3.4	18.0	3.1	16
1194	17	24	2.6	3.5	C102_0050 EZ402U	78	146	5.025	201/40	3800	3500	6000	2.2	18.0	3.1	16
1194	25	38	3.8	2.3	C102_0050 EZ502U	117	146	5.025	201/40	3800	3500	6000	5.7	18.0	3.1	17
1194	25	39	3.8	2.3	C102_0050 EZ701U	97	220	5.025	201/40	3800	3500	6000	9.0	18.0	3.1	19
1194	28	41	4.3	2.1	C102_0050 EZ404U	117	146	5.025	201/40	3800	3500	6000	3.5	18.0	3.1	18
1194	30	52	4.5	2.0	C102_0050 EZ503U	117	146	5.025	201/40	3800	3500	6000	8.1	18.0	3.1	19
1194	35	70	5.3	1.7	C102_0050 EZ702U	130	220	5.025	201/40	3800	3500	6000	14	18.0	3.1	22
1288	15	20	2.5	3.8	C102_0047 EZ501U	72	136	4.658	3149/676	3800	3500	6000	3.4	18.0	3.1	16
1288	16	22	2.5	3.7	C102_0047 EZ402U	72	136	4.658	3149/676	3800	3500	6000	2.2	18.0	3.1	16
1288	23	35	3.8	2.5	C102_0047 EZ502U	108	136	4.658	3149/676	3800	3500	6000	5.7	18.0	3.1	17
1288	23	36	3.8	2.5	C102_0047 EZ701U	90	220	4.658	3149/676	3800	3500	6000	9.0	18.0	3.1	19
1288	26	38	4.2	2.2	C102_0047 EZ404U	108	136	4.658	3149/676	3800	3500	6000	3.5	18.0	3.1	18
1288	28	48	4.5	2.1	C102_0047 EZ503U	108	136	4.658	3149/676	3800	3500	6000	8.1	18.0	3.1	19
1288	33	65	5.2	1.8	C102_0047 EZ702U	130	220	4.658	3149/676	3800	3500	6000	14	18.0	3.1	22
1432	6.1	6.8	2.4	4.0	C102_0042 EZ302U	20	30	4.189	377/90	3600	3100	6000	0.99	18.0	3.1	13
1432	8.0	9.1	3.2	3.1	C102_0042 EZ303U	24	30	4.189	377/90	3600	3100	6000	1.1	18.0	3.1	14
1432	14	18	2.4	4.0	C102_0042 EZ501U	65	122	4.189	377/90	3600	3100	6000	3.6	18.0	3.1	16
1432	14	20	2.5	3.9	C102_0042 EZ402U	65	122	4.189	377/90	3600	3100	6000	2.3	18.0	3.1	16
1432	21	32	3.7	2.6	C102_0042 EZ502U	98	122	4.189	377/90	3600	3100	6000	5.9	18.0	3.1	17
1432	21	32	3.7	2.6	C102_0042 EZ701U	81	220	4.189	377/90	3600	3100	6000	9.2	18.0	3.1	19
1432	24	34	4.1	2.4	C102_0042 EZ404U	98	122	4.189	377/90	3600	3100	6000	3.7	18.0	3.1	18
1432	25	43	4.4	2.2	C102_0042 EZ503U	98	122	4.189	377/90	3600	3100	6000	8.3	18.0	3.1	19
1432	29	58	5.1	1.9	C102_0042 EZ702U	130	220	4.189	377/90	3600	3100	6000	14	18.0	3.1	22
1545	5.7	6.3	2.5	4.0	C102_0039 EZ302U	19	28	3.883	1363/351	3600	3100	6000	1.0	18.0	3.1	13
1545	7.4	8.5	3.3	3.1	C102_0039 EZ303U	23	28	3.883	1363/351	3600	3100	6000	1.1	18.0	3.1	14
1545	13	17	2.4	4.3	C102_0039 EZ501U	60	113	3.883	1363/351	3600	3100	6000	3.6	18.0	3.1	16
1545	13	18	2.5	4.1	C102_0039 EZ402U	60	113	3.883	1363/351	3600	3100	6000	2.3	18.0	3.1	16
1545	20	29	3.7	2.8	C102_0039 EZ502U	90	113	3.883	1363/351	3600	3100	6000	5.9	18.0	3.1	17
1545	20	30	3.7	2.8	C102_0039 EZ701U	75	220	3.883	1363/351	3600	3100	6000	9.2	18.0	3.1	19
1545	22	32	4.1	2.5	C102_0039 EZ404U	90	113	3.883	1363/351	3600	3100	6000	3.7	18.0	3.1	18
1545	23	40	4.4	2.3	C102_0039 EZ503U	90	113	3.883	1363/351	3600	3100	6000	8.3	18.0	3.1	19
1545	27	54	5.1	2.0	C102_0039 EZ702U	130	220	3.883	1363/351	3600	3100	6000	14	18.0	3.1	22
1800	11	14	2.3	4.7	C102_0033 EZ501U	52	97	3.334	2067/620	3600	3100	6000	3.9	18.0	3.1	16
1800	11	16	2.4	4.6	C102_0033 EZ402U	52	97	3.334	2067/620	3600	3100	6000	2.6	18.0	3.1	16
1800	17	25	3.6	3.1	C102_0033 EZ502U	78	97	3.334	2067/620	3600	3100	6000	6.2	18.0	3.1	17
1800	17	26	3.6	3.1	C102_0033 EZ701U	65	220	3.334	2067/620	3600	3100	6000	9.5	18.0	3.1	19
1800	19	27	4.0	2.8	C102_0033 EZ404U	78	97	3.334	2067/620	3600	3100	6000	4.0	18.0	3.1	18
1800	20	34	4.2	2.6	C102_0033 EZ503U	78	97	3.334	2067/620	3600	3100	6000	8.6	18.0	3.1	19
1800	23	46	4.9	2.2	C102_0033 EZ702U	123	220	3.334	2067/620	3600	3100	6000	15	18.0	3.1	22
1941	10	13	2.3	5.0	C102_0031 EZ501U	48	90	3.091	2491/806	3600	3100	6000	3.9	18.0	3.1	16
1941	10	15	2.4	4.8	C102_0031 EZ402U	48	90	3.091	2491/806	3600	3100	6000	2.6	18.0	3.1	16
1941	16	23	3.5	3.2	C102_0031 EZ502U	72	90	3.091	2491/806	3600	3100	6000	6.2	18.0	3.1	17
1941	16	24	3.5	3.2	C102_0031 EZ701U	60	220	3.091	2491/806	3600	3100	6000	9.5	18.0	3.1	19
1941	17	25	3.9	2.9	C102_0031 EZ404U	72	90	3.091	2491/806	3600	3100	6000	4.0	18.0	3.1	18
1941	19	32	4.2	2.7	C102_0031 EZ503U	72	90	3.091	2491/806	3600	3100	6000	8.6	18.0	3.1	19
1941	22	43	4.9	2.3	C102_0031 EZ702U	120	220	3.091	2491/806	3600	3100	6000	15	18.0	3.1	22
C2 (n_{1N} = 3000 min^{-1}, $M_{2acc,max}$ = 230 Nm)																
27	168	178	1.8	1.2	C203_1110 EZ302U	230	400	110.6	191149/1728	4000	3900	6500	0.36	14.0	8.3	22
32	140	148	1.6	1.4	C203_0920 EZ302U	230	400	92.40	29939/324	4000	3900	6500	0.36	14.0	8.3	22
32	183	193	2.1	1.1	C203_0920 EZ303U	230	400	92.40	29939/324	4000	3900	6500	0.47	14.0	8.3	22

n_{2N} [rpm]	M_{2N} [Nm]	$M_{2,0}$ [Nm]	a_{th}	S	Type	M_{2acc} [Nm]	M_{2NOT} [Nm]	i	i_{exakt}	n_{1maxDB} EL1,2,3,4 [rpm]	n_{1maxDB} EL5,6 [rpm]	n_{1maxZB} [rpm]	J_1 [kgcm²]	$\Delta\varphi_2$ [arcmin]	C_2 [Nm/ arcmin]	m [kg]
C2 (n_{1N} = 3000 min^{-1}, $M_{2acc,max}$ = 230 Nm)																
37	123	129	1.5	1.6	C203_0810 EZ302U	230	400	80.62	11609/144	4000	3900	6500	0.36	14.0	8.3	22
37	160	169	2.0	1.3	C203_0810 EZ303U	230	400	80.62	11609/144	4000	3900	6500	0.47	14.0	8.3	22
43	108	115	1.4	1.8	C202_0700 EZ302U	230	302	70.32	7595/108	4000	3900	6500	0.36	14.0	8.3	17
43	141	149	1.9	1.4	C202_0700 EZ303U	230	302	70.32	7595/108	4000	3900	6500	0.47	14.0	8.3	18
43	191	205	2.5	1.0	C202_0700 EZ401U	230	302	70.32	7595/108	4000	3900	6500	1.0	14.0	8.3	19
49	95	100	1.4	2.0	C202_0610 EZ302U	211	263	61.35	2945/48	4000	3900	6500	0.36	14.0	8.3	17
49	123	130	1.8	1.5	C202_0610 EZ303U	211	263	61.35	2945/48	4000	3900	6500	0.47	14.0	8.3	18
49	167	179	2.5	1.1	C202_0610 EZ401U	211	263	61.35	2945/48	4000	3900	6500	1.0	14.0	8.3	19
53	153	164	2.2	1.3	C202_0560 EZ401U	230	400	56.42	1862/33	4000	3900	6500	1.0	14.0	8.3	19
61	134	143	2.1	1.5	C202_0490 EZ401U	230	400	49.23	1083/22	4000	3900	6500	1.0	14.0	8.3	19
64	127	136	2.0	1.6	C202_0470 EZ401U	230	400	46.82	2107/45	4000	3900	6500	1.1	14.0	8.3	19
64	195	213	3.1	1.0	C202_0470 EZ501U	230	400	46.82	2107/45	4000	3900	6500	3.0	14.0	8.3	20
73	111	119	1.9	1.8	C202_0410 EZ401U	230	400	40.85	817/20	4000	3900	6500	1.1	14.0	8.3	19
73	170	186	2.9	1.2	C202_0410 EZ501U	230	400	40.85	817/20	4000	3900	6500	3.0	14.0	8.3	20
73	186	206	3.2	1.1	C202_0410 EZ402U	230	400	40.85	817/20	4000	3900	6500	1.8	14.0	8.3	20
85	96	102	1.8	2.1	C202_0350 EZ401U	230	400	35.18	1372/39	4000	3900	6500	1.2	14.0	8.3	19
85	147	160	2.7	1.4	C202_0350 EZ501U	230	400	35.18	1372/39	4000	3900	6500	3.1	14.0	8.3	20
85	160	177	3.0	1.2	C202_0350 EZ402U	230	400	35.18	1372/39	4000	3900	6500	1.9	14.0	8.3	20
98	83	89	1.7	2.4	C202_0310 EZ401U	230	400	30.69	399/13	4000	3900	6500	1.2	14.0	8.3	19
98	128	140	2.5	1.6	C202_0310 EZ501U	230	400	30.69	399/13	4000	3900	6500	3.1	14.0	8.3	20
98	140	155	2.8	1.4	C202_0310 EZ402U	230	400	30.69	399/13	4000	3900	6500	1.9	14.0	8.3	20
106	77	82	1.6	2.6	C202_0280 EZ401U	230	400	28.24	4067/144	4000	3900	6500	1.2	14.0	8.3	19
106	118	129	2.4	1.7	C202_0280 EZ501U	230	400	28.24	4067/144	4000	3900	6500	3.2	14.0	8.3	20
106	129	142	2.7	1.6	C202_0280 EZ402U	230	400	28.24	4067/144	4000	3900	6500	1.9	14.0	8.3	20
106	189	236	3.9	1.1	C202_0280 EZ404U	230	400	28.24	4067/144	4000	3900	6500	3.3	14.0	8.3	22
122	67	72	1.5	3.0	C202_0250 EZ401U	203	400	24.64	1577/64	4000	3900	6500	1.3	14.0	8.3	19
122	103	112	2.3	1.9	C202_0250 EZ501U	230	400	24.64	1577/64	4000	3900	6500	3.2	14.0	8.3	20
122	112	124	2.5	1.8	C202_0250 EZ402U	230	400	24.64	1577/64	4000	3900	6500	2.0	14.0	8.3	20
122	165	206	3.7	1.2	C202_0250 EZ404U	230	400	24.64	1577/64	4000	3900	6500	3.3	14.0	8.3	22
122	177	191	3.9	1.1	C202_0250 EZ502U	230	400	24.64	1577/64	4000	3900	6500	5.5	14.0	8.3	21
122	177	198	3.9	1.1	C202_0250 EZ701U	230	400	24.64	1577/64	4000	3900	6500	8.8	14.0	8.3	23
127	64	69	1.5	3.1	C202_0240 EZ401U	195	400	23.59	637/27	4000	3900	6500	1.3	14.0	8.3	19
127	98	108	2.2	2.0	C202_0240 EZ501U	230	400	23.59	637/27	4000	3900	6500	3.3	14.0	8.3	20
127	108	119	2.4	1.9	C202_0240 EZ402U	230	400	23.59	637/27	4000	3900	6500	2.0	14.0	8.3	20
127	158	197	3.6	1.3	C202_0240 EZ404U	230	400	23.59	637/27	4000	3900	6500	3.4	14.0	8.3	22
127	169	183	3.8	1.2	C202_0240 EZ502U	230	400	23.59	637/27	4000	3900	6500	5.6	14.0	8.3	21
127	169	190	3.8	1.2	C202_0240 EZ701U	230	400	23.59	637/27	4000	3900	6500	8.9	14.0	8.3	23
146	56	60	1.4	3.6	C202_0210 EZ401U	170	400	20.58	247/12	4000	3900	6500	1.4	14.0	8.3	19
146	86	94	2.1	2.3	C202_0210 EZ501U	230	400	20.58	247/12	4000	3900	6500	3.3	14.0	8.3	20
146	94	104	2.3	2.1	C202_0210 EZ402U	230	400	20.58	247/12	4000	3900	6500	2.1	14.0	8.3	20
146	138	172	3.3	1.5	C202_0210 EZ404U	230	400	20.58	247/12	4000	3900	6500	3.4	14.0	8.3	22
146	148	160	3.6	1.4	C202_0210 EZ502U	230	400	20.58	247/12	4000	3900	6500	5.6	14.0	8.3	21
146	148	166	3.6	1.4	C202_0210 EZ701U	230	400	20.58	247/12	4000	3900	6500	8.9	14.0	8.3	23
146	194	222	4.7	1.0	C202_0210 EZ503U	230	400	20.58	247/12	4000	3900	6500	8.0	14.0	8.3	23
171	48	51	1.3	4.2	C202_0175 EZ401U	144	400	17.52	3626/207	3700	3500	5500	1.6	14.0	8.3	19
171	73	80	1.9	2.7	C202_0175 EZ501U	230	400	17.52	3626/207	3700	3500	5500	3.5	14.0	8.3	20
171	80	88	2.1	2.5	C202_0175 EZ402U	230	400	17.52	3626/207	3700	3500	5500	2.3	14.0	8.3	20
171	117	146	3.1	1.7	C202_0175 EZ404U	230	400	17.52	3626/207	3700	3500	5500	3.6	14.0	8.3	22
171	126	136	3.3	1.6	C202_0175 EZ502U	230	400	17.52	3626/207	3700	3500	5500	5.8	14.0	8.3	21
171	126	141	3.3	1.6	C202_0175 EZ701U	230	400	17.52	3626/207	3700	3500	5500	9.1	14.0	8.3	23
171	165	189	4.3	1.2	C202_0175 EZ503U	230	400	17.52	3626/207	3700	3500	5500	8.2	14.0	8.3	23
196	42	44	1.2	4.8	C202_0155 EZ401U	126	400	15.28	703/46	3700	3500	5500	1.6	14.0	8.3	19
196	64	70	1.8	3.1	C202_0155 EZ501U	230	400	15.28	703/46	3700	3500	5500	3.5	14.0	8.3	20
196	70	77	2.0	2.9	C202_0155 EZ402U	230	400	15.28	703/46	3700	3500	5500	2.3	14.0	8.3	20
196	102	127	2.9	2.0	C202_0155 EZ404U	230	400	15.28	703/46	3700	3500	5500	3.6	14.0	8.3	22
196	110	119	3.1	1.8	C202_0155 EZ502U	230	400	15.28	703/46	3700	3500	5500	5.8	14.0	8.3	21
196	110	123	3.1	1.8	C202_0155 EZ701U	230	400	15.28	703/46	3700	3500	5500	9.1	14.0	8.3	23
196	144	165	4.0	1.4	C202_0155 EZ503U	230	400	15.28	703/46	3700	3500	5500	8.2	14.0	8.3	23
196	178	213	5.0	1.1	C202_0155 EZ702U	230	400	15.28	703/46	3700	3500	5500	14	14.0	8.3	26
213	59	64	1.7	3.4	C202_0140 EZ501U	219	400	14.12	3430/243	3700	3500	5500	3.7	14.0	8.3	20
213	64	71	1.9	3.1	C202_0140 EZ402U	219	400	14.12	3430/243	3700	3500	5500	2.5	14.0	8.3	20
213	94	118	2.8	2.1	C202_0140 EZ404U	230	400	14.12	3430/243	3700	3500	5500	3.8	14.0	8.3	22
213	101	110	3.0	2.0	C202_0140 EZ502U	230	400	14.12	3430/243	3700	3500	5500	6.0	14.0	8.3	21
213	101	114	3.0	2.0	C202_0140 EZ701U	230	400	14.12	3430/243	3700	3500	5500	9.3	14.0	8.3	23

n_{2N} [rpm]	M_{2N} [Nm]	$M_{2,0}$ [Nm]	a_{th}	S	Type	M_{2acc} [Nm]	M_{2NOT} [Nm]	i	i_{exakt}	n_{1maxDB} EL1,2,3,4 [rpm]	n_{1maxDB} EL5,6 [rpm]	n_{1maxZB} [rpm]	J_1 [kgcm²]	$\Delta\varphi_2$ [arcmin]	C_2 [Nm/ arcmin]	m [kg]
C2 (n_{1N} = 3000 min^{-1}, $M_{2acc,max}$ = 230 Nm)																
213	133	152	3.9	1.5	C202_0140 EZ503U	230	400	14.12	3430/243	3700	3500	5500	8.4	14.0	8.3	23
213	164	197	4.8	1.2	C202_0140 EZ702U	230	400	14.12	3430/243	3700	3500	5500	15	14.0	8.3	26
213	185	219	5.4	1.1	C202_0140 EZ505U	230	400	14.12	3430/243	3700	3500	5500	13	14.0	8.3	26
244	51	56	1.6	3.8	C202_0125 EZ501U	191	359	12.32	665/54	3700	3500	5500	3.8	14.0	8.3	20
244	56	62	1.8	3.5	C202_0125 EZ402U	191	359	12.32	665/54	3700	3500	5500	2.5	14.0	8.3	20
244	82	103	2.6	2.4	C202_0125 EZ404U	230	359	12.32	665/54	3700	3500	5500	3.8	14.0	8.3	22
244	88	96	2.8	2.2	C202_0125 EZ502U	230	359	12.32	665/54	3700	3500	5500	6.1	14.0	8.3	21
244	88	99	2.8	2.2	C202_0125 EZ701U	230	400	12.32	665/54	3700	3500	5500	9.4	14.0	8.3	23
244	116	133	3.7	1.7	C202_0125 EZ503U	230	359	12.32	665/54	3700	3500	5500	8.4	14.0	8.3	23
244	143	172	4.6	1.4	C202_0125 EZ702U	230	400	12.32	665/54	3700	3500	5500	15	14.0	8.3	26
244	161	191	5.2	1.2	C202_0125 EZ505U	230	400	12.32	665/54	3700	3500	5500	13	14.0	8.3	26
255	49	54	1.6	3.9	C202_0120 EZ501U	183	342	11.76	294/25	3500	3100	5000	4.0	14.0	8.3	20
255	54	59	1.8	3.6	C202_0120 EZ402U	183	342	11.76	294/25	3500	3100	5000	2.7	14.0	8.3	20
255	79	98	2.6	2.4	C202_0120 EZ404U	230	342	11.76	294/25	3500	3100	5000	4.1	14.0	8.3	22
255	84	91	2.8	2.3	C202_0120 EZ502U	230	342	11.76	294/25	3500	3100	5000	6.3	14.0	8.3	21
255	84	95	2.8	2.3	C202_0120 EZ701U	228	400	11.76	294/25	3500	3100	5000	9.6	14.0	8.3	23
255	111	127	3.7	1.7	C202_0120 EZ503U	230	342	11.76	294/25	3500	3100	5000	8.7	14.0	8.3	23
255	137	164	4.6	1.4	C202_0120 EZ702U	230	400	11.76	294/25	3500	3100	5000	15	14.0	8.3	26
255	154	183	5.1	1.3	C202_0120 EZ505U	230	400	11.76	294/25	3500	3100	5000	13	14.0	8.3	26
255	188	237	6.3	1.0	C202_0120 EZ703U	230	400	11.76	294/25	3500	3100	5000	23	14.0	8.3	28
292	43	47	1.6	4.3	C202_0105 EZ501U	159	299	10.26	513/50	3500	3100	5000	4.0	14.0	8.3	20
292	47	52	1.7	3.9	C202_0105 EZ402U	159	299	10.26	513/50	3500	3100	5000	2.8	14.0	8.3	20
292	69	86	2.6	2.7	C202_0105 EZ404U	230	299	10.26	513/50	3500	3100	5000	4.1	14.0	8.3	22
292	74	80	2.7	2.5	C202_0105 EZ502U	230	299	10.26	513/50	3500	3100	5000	6.3	14.0	8.3	21
292	74	83	2.7	2.5	C202_0105 EZ701U	199	400	10.26	513/50	3500	3100	5000	9.6	14.0	8.3	23
292	97	110	3.6	1.9	C202_0105 EZ503U	230	299	10.26	513/50	3500	3100	5000	8.7	14.0	8.3	23
292	119	143	4.5	1.5	C202_0105 EZ702U	230	400	10.26	513/50	3500	3100	5000	15	14.0	8.3	26
292	134	159	5.0	1.4	C202_0105 EZ505U	230	400	10.26	513/50	3500	3100	5000	13	14.0	8.3	26
292	164	207	6.1	1.1	C202_0105 EZ703U	230	400	10.26	513/50	3500	3100	5000	23	14.0	8.3	28
320	67	76	2.7	2.7	C202_0094 EZ701U	182	400	9.387	2450/261	3500	3100	5000	10	14.0	8.3	23
320	109	131	4.4	1.6	C202_0094 EZ702U	230	400	9.387	2450/261	3500	3100	5000	15	14.0	8.3	26
320	123	146	4.9	1.5	C202_0094 EZ505U	230	400	9.387	2450/261	3500	3100	5000	14	14.0	8.3	26
320	150	189	6.0	1.2	C202_0094 EZ703U	230	400	9.387	2450/261	3500	3100	5000	23	14.0	8.3	28
366	59	66	2.6	2.9	C202_0082 EZ701U	159	400	8.190	475/58	3500	3100	5000	10	14.0	8.3	23
366	95	114	4.3	1.8	C202_0082 EZ702U	230	400	8.190	475/58	3500	3100	5000	15	14.0	8.3	26
366	107	127	4.8	1.6	C202_0082 EZ505U	230	400	8.190	475/58	3500	3100	5000	14	14.0	8.3	26
366	131	165	5.9	1.3	C202_0082 EZ703U	230	400	8.190	475/58	3500	3100	5000	23	14.0	8.3	28
385	33	36	1.9	4.1	C202_0078 EZ501U	121	216	7.800	39/5	4000	3900	6500	3.4	17.0	6.0	20
385	36	39	2.1	3.7	C202_0078 EZ402U	121	216	7.800	39/5	4000	3900	6500	2.1	17.0	6.0	20
385	52	65	3.1	2.5	C202_0078 EZ404U	173	216	7.800	39/5	4000	3900	6500	3.5	17.0	6.0	22
385	56	61	3.3	2.4	C202_0078 EZ502U	173	216	7.800	39/5	4000	3900	6500	5.7	17.0	6.0	21
385	56	63	3.3	2.4	C202_0078 EZ701U	151	350	7.800	39/5	4000	3900	6500	9.0	17.0	6.0	23
385	73	84	4.4	1.8	C202_0078 EZ503U	173	216	7.800	39/5	4000	3900	6500	8.1	17.0	6.0	23
385	91	109	5.4	1.5	C202_0078 EZ702U	200	350	7.800	39/5	4000	3900	6500	14	17.0	6.0	26
385	102	121	6.1	1.3	C202_0078 EZ505U	200	350	7.800	39/5	4000	3900	6500	13	17.0	6.0	26
385	125	157	7.4	1.1	C202_0078 EZ703U	200	350	7.800	39/5	4000	3900	6500	22	17.0	6.0	28
477	26	29	1.9	4.7	C202_0063 EZ501U	98	183	6.295	3330/529	3700	3500	5500	3.7	17.0	6.0	20
477	29	32	2.0	4.3	C202_0063 EZ402U	98	183	6.295	3330/529	3700	3500	5500	2.4	17.0	6.0	20
477	42	53	3.0	2.9	C202_0063 EZ404U	147	183	6.295	3330/529	3700	3500	5500	3.8	17.0	6.0	22
477	45	49	3.2	2.7	C202_0063 EZ502U	147	183	6.295	3330/529	3700	3500	5500	6.0	17.0	6.0	21
477	45	51	3.2	2.7	C202_0063 EZ701U	122	350	6.295	3330/529	3700	3500	5500	9.3	17.0	6.0	23
477	59	68	4.2	2.1	C202_0063 EZ503U	147	183	6.295	3330/529	3700	3500	5500	8.4	17.0	6.0	23
477	73	88	5.2	1.7	C202_0063 EZ702U	200	350	6.295	3330/529	3700	3500	5500	15	17.0	6.0	26
477	82	98	5.9	1.5	C202_0063 EZ505U	200	350	6.295	3330/529	3700	3500	5500	13	17.0	6.0	26
477	101	127	7.2	1.2	C202_0063 EZ703U	200	350	6.295	3330/529	3700	3500	5500	22	17.0	6.0	28
518	24	26	1.8	5.0	C202_0058 EZ501U	90	169	5.791	666/115	3700	3500	5500	3.7	17.0	6.0	20
518	26	29	2.0	4.5	C202_0058 EZ402U	90	169	5.791	666/115	3700	3500	5500	2.4	17.0	6.0	20
518	39	48	3.0	3.1	C202_0058 EZ404U	135	169	5.791	666/115	3700	3500	5500	3.8	17.0	6.0	22
518	42	45	3.2	2.9	C202_0058 EZ502U	135	169	5.791	666/115	3700	3500	5500	6.0	17.0	6.0	21
518	42	47	3.2	2.9	C202_0058 EZ701U	112	350	5.791	666/115	3700	3500	5500	9.3	17.0	6.0	23
518	54	62	4.2	2.2	C202_0058 EZ503U	135	169	5.791	666/115	3700	3500	5500	8.4	17.0	6.0	23
518	67	81	5.1	1.8	C202_0058 EZ702U	200	350	5.791	666/115	3700	3500	5500	15	17.0	6.0	26
518	76	90	5.8	1.6	C202_0058 EZ505U	200	350	5.791	666/115	3700	3500	5500	13	17.0	6.0	26
518	93	117	7.1	1.3	C202_0058 EZ703U	200	350	5.791	666/115	3700	3500	5500	22	17.0	6.0	28

n_{2N} [rpm]	M_{2N} [Nm]	$M_{2,0}$ [Nm]	a_{th}	S	Type	M_{2acc} [Nm]	M_{2NOT} [Nm]	i	i_{exakt}	n_{1maxDB} EL1,2,3,4 [rpm]	n_{1maxDB} EL5,6 [rpm]	n_{1maxZB} [rpm]	J_1 [kgcm²]	$\Delta\varphi_2$ [arcmin]	C_2 [Nm/arcmin]	m [kg]
C2 (n_{1N} = 3000 min^{-1}, $M_{2acc,max}$ = 230 Nm)																
591	23	26	2.0	5.0	C202_0051 EZ402U	79	148	5.072	350/69	3700	3500	5500	2.7	17.0	6.0	20
591	34	42	2.9	3.4	C202_0051 EZ404U	118	148	5.072	350/69	3700	3500	5500	4.1	17.0	6.0	22
591	36	39	3.1	3.1	C202_0051 EZ502U	118	148	5.072	350/69	3700	3500	5500	6.3	17.0	6.0	21
591	36	41	3.1	3.1	C202_0051 EZ701U	98	350	5.072	350/69	3700	3500	5500	9.6	17.0	6.0	23
591	48	55	4.1	2.4	C202_0051 EZ503U	118	148	5.072	350/69	3700	3500	5500	8.7	17.0	6.0	23
591	59	71	5.0	1.9	C202_0051 EZ702U	200	350	5.072	350/69	3700	3500	5500	15	17.0	6.0	26
591	66	79	5.7	1.7	C202_0051 EZ505U	200	350	5.072	350/69	3700	3500	5500	13	17.0	6.0	26
591	81	102	6.9	1.4	C202_0051 EZ703U	200	350	5.072	350/69	3700	3500	5500	23	17.0	6.0	28
643	31	39	2.9	3.5	C202_0047 EZ404U	109	136	4.667	14/3	3700	3500	5500	4.1	17.0	6.0	22
643	34	36	3.1	3.2	C202_0047 EZ502U	109	136	4.667	14/3	3700	3500	5500	6.3	17.0	6.0	21
643	34	38	3.1	3.3	C202_0047 EZ701U	91	339	4.667	14/3	3700	3500	5500	9.6	17.0	6.0	23
643	44	50	4.1	2.5	C202_0047 EZ503U	109	136	4.667	14/3	3700	3500	5500	8.7	17.0	6.0	23
643	54	65	5.0	2.1	C202_0047 EZ702U	186	339	4.667	14/3	3700	3500	5500	15	17.0	6.0	26
643	61	72	5.6	1.8	C202_0047 EZ505U	200	339	4.667	14/3	3700	3500	5500	13	17.0	6.0	26
643	75	94	6.8	1.5	C202_0047 EZ703U	200	339	4.667	14/3	3700	3500	5500	23	17.0	6.0	28
710	28	35	3.1	3.5	C202_0042 EZ404U	98	123	4.226	486/115	3500	3100	5000	4.4	17.0	6.0	22
710	30	33	3.3	3.2	C202_0042 EZ502U	98	123	4.226	486/115	3500	3100	5000	6.6	17.0	6.0	21
710	30	34	3.0	3.6	C202_0042 EZ701U	82	308	4.226	486/115	3500	3100	5000	9.9	17.0	6.0	23
710	40	46	4.3	2.5	C202_0042 EZ503U	98	123	4.226	486/115	3500	3100	5000	9.0	17.0	6.0	23
710	49	59	4.9	2.2	C202_0042 EZ702U	168	308	4.226	486/115	3500	3100	5000	15	17.0	6.0	26
710	55	66	5.5	1.9	C202_0042 EZ505U	200	308	4.226	486/115	3500	3100	5000	14	17.0	6.0	26
710	68	85	6.7	1.6	C202_0042 EZ703U	200	308	4.226	486/115	3500	3100	5000	23	17.0	6.0	28
772	26	32	3.2	3.5	C202_0039 EZ404U	91	113	3.888	486/125	3500	3100	5000	4.5	17.0	6.0	22
772	28	30	3.4	3.2	C202_0039 EZ502U	91	113	3.888	486/125	3500	3100	5000	6.7	17.0	6.0	21
772	28	31	3.0	3.8	C202_0039 EZ701U	75	283	3.888	486/125	3500	3100	5000	10	17.0	6.0	23
772	37	42	4.5	2.5	C202_0039 EZ503U	91	113	3.888	486/125	3500	3100	5000	9.1	17.0	6.0	23
772	45	54	4.8	2.3	C202_0039 EZ702U	155	283	3.888	486/125	3500	3100	5000	15	17.0	6.0	26
772	51	60	5.4	2.1	C202_0039 EZ505U	198	283	3.888	486/125	3500	3100	5000	14	17.0	6.0	26
772	62	78	6.6	1.7	C202_0039 EZ703U	198	283	3.888	486/125	3500	3100	5000	23	17.0	6.0	28
889	24	27	2.9	4.1	C202_0034 EZ701U	65	246	3.373	2250/667	3500	3100	5000	11	17.0	6.0	23
889	39	47	4.7	2.5	C202_0034 EZ702U	134	246	3.373	2250/667	3500	3100	5000	16	17.0	6.0	26
889	44	52	5.3	2.3	C202_0034 EZ505U	189	246	3.373	2250/667	3500	3100	5000	14	17.0	6.0	26
889	54	68	6.5	1.9	C202_0034 EZ703U	189	246	3.373	2250/667	3500	3100	5000	24	17.0	6.0	28
967	22	25	2.9	4.4	C202_0031 EZ701U	60	226	3.103	90/29	3500	3100	5000	11	17.0	6.0	23
967	36	43	4.6	2.7	C202_0031 EZ702U	123	226	3.103	90/29	3500	3100	5000	16	17.0	6.0	26
967	41	48	5.2	2.4	C202_0031 EZ505U	181	226	3.103	90/29	3500	3100	5000	14	17.0	6.0	26
967	50	63	6.4	2.0	C202_0031 EZ703U	181	226	3.103	90/29	3500	3100	5000	24	17.0	6.0	28
1115	19	22	2.8	4.8	C202_0027 EZ701U	52	196	2.690	495/184	3000	2600	4500	11	17.0	6.0	23
1115	31	38	4.5	3.0	C202_0027 EZ702U	107	196	2.690	495/184	3000	2600	4500	17	17.0	6.0	26
1115	35	42	5.1	2.6	C202_0027 EZ505U	157	196	2.690	495/184	3000	2600	4500	15	17.0	6.0	26
1115	43	54	6.2	2.2	C202_0027 EZ703U	157	196	2.690	495/184	3000	2600	4500	24	17.0	6.0	28
1212	29	35	4.5	3.1	C202_0025 EZ702U	98	180	2.475	99/40	3000	2600	4500	17	17.0	6.0	26
1212	32	38	5.0	2.8	C202_0025 EZ505U	144	180	2.475	99/40	3000	2600	4500	15	17.0	6.0	26
1212	40	50	6.1	2.3	C202_0025 EZ703U	144	180	2.475	99/40	3000	2600	4500	25	17.0	6.0	28
1374	25	31	4.4	3.4	C202_0022 EZ702U	87	159	2.184	2160/989	3000	2600	4500	17	17.0	6.0	26
1374	29	34	4.9	3.0	C202_0022 EZ505U	127	159	2.184	2160/989	3000	2600	4500	16	17.0	6.0	26
1374	35	44	6.0	2.5	C202_0022 EZ703U	127	159	2.184	2160/989	3000	2600	4500	25	17.0	6.0	28
1374	45	64	7.8	1.9	C202_0022 EZ705U	163	350	2.184	2160/989	3000	2600	4500	38	17.0	6.0	33
1493	23	28	4.3	3.6	C202_0020 EZ702U	80	146	2.009	432/215	3000	2600	4500	18	17.0	6.0	26
1493	26	31	4.9	3.2	C202_0020 EZ505U	117	146	2.009	432/215	3000	2600	4500	16	17.0	6.0	26
1493	32	41	5.9	2.6	C202_0020 EZ703U	117	146	2.009	432/215	3000	2600	4500	26	17.0	6.0	28
1493	42	59	7.7	2.0	C202_0020 EZ705U	159	350	2.009	432/215	3000	2600	4500	38	17.0	6.0	33
C2 (n_{1N} = 4500 min^{-1}, $M_{2acc,max}$ = 230 Nm)																
219	190	305	4.6	1.1	C202_0210 EZ505U	230	400	20.58	247/12	4000	3900	6500	13	14.0	8.3	26
257	161	260	4.4	1.2	C202_0175 EZ505U	230	400	17.52	3626/207	3700	3500	5500	13	14.0	8.3	26
294	141	227	4.3	1.3	C202_0155 EZ505U	230	400	15.28	703/46	3700	3500	5500	13	14.0	8.3	26
294	179	296	5.5	1.0	C202_0155 EZ703U	230	400	15.28	703/46	3700	3500	5500	22	14.0	8.3	28
319	130	209	4.3	1.4	C202_0140 EZ505U	230	400	14.12	3430/243	3700	3500	5500	13	14.0	8.3	26
319	166	274	5.4	1.1	C202_0140 EZ703U	230	400	14.12	3430/243	3700	3500	5500	22	14.0	8.3	28
365	113	183	4.2	1.5	C202_0125 EZ505U	230	400	12.32	665/54	3700	3500	5500	13	14.0	8.3	26
365	145	239	5.3	1.2	C202_0125 EZ703U	230	400	12.32	665/54	3700	3500	5500	22	14.0	8.3	28
383	108	175	4.1	1.6	C202_0120 EZ505U	230	400	11.76	294/25	3500	3100	5000	13	14.0	8.3	26
383	138	228	5.3	1.2	C202_0120 EZ703U	230	400	11.76	294/25	3500	3100	5000	23	14.0	8.3	28
439	95	152	4.0	1.7	C202_0105 EZ505U	230	400	10.26	513/50	3500	3100	5000	13	14.0	8.3	26

n_{2N} [rpm]	M_{2N} [Nm]	$M_{2,0}$ [Nm]	a_{th}	S	Type	M_{2acc} [Nm]	M_{2NOT} [Nm]	i	i_{exakt}	n_{1maxDB} EL1,2,3,4 [rpm]	n_{1maxDB} EL5,6 [rpm]	n_{1maxZB} [rpm]	J_1 [kgcm²]	$\Delta\varphi_2$ [arcmin]	C_2 [Nm/arcmin]	m [kg]
C2 (n_{1N} = 4500 min^{-1}, $M_{2acc,max}$ = 230 Nm)																
439	120	199	5.1	1.3	C202_0105 EZ703U	230	400	10.26	513/50	3500	3100	5000	23	14.0	8.3	28
479	87	139	4.0	1.8	C202_0094 EZ505U	230	400	9.387	2450/261	3500	3100	5000	14	14.0	8.3	26
479	110	182	5.1	1.4	C202_0094 EZ703U	230	400	9.387	2450/261	3500	3100	5000	23	14.0	8.3	28
549	75	122	3.9	2.0	C202_0082 EZ505U	230	400	8.190	475/58	3500	3100	5000	14	14.0	8.3	26
549	96	159	5.0	1.6	C202_0082 EZ703U	230	400	8.190	475/58	3500	3100	5000	23	14.0	8.3	28
577	72	116	4.9	1.6	C202_0078 EZ505U	200	350	7.800	39/5	4000	3900	6500	13	17.0	6.0	26
577	92	151	6.2	1.3	C202_0078 EZ703U	200	350	7.800	39/5	4000	3900	6500	22	17.0	6.0	28
715	58	93	4.7	1.9	C202_0063 EZ505U	200	350	6.295	3330/529	3700	3500	5500	13	17.0	6.0	26
715	74	122	6.0	1.5	C202_0063 EZ703U	200	350	6.295	3330/529	3700	3500	5500	22	17.0	6.0	28
777	53	86	4.7	2.0	C202_0058 EZ505U	200	350	5.791	666/115	3700	3500	5500	13	17.0	6.0	26
777	68	112	5.9	1.5	C202_0058 EZ703U	200	350	5.791	666/115	3700	3500	5500	22	17.0	6.0	28
887	47	75	4.6	2.1	C202_0051 EZ505U	200	350	5.072	350/69	3700	3500	5500	13	17.0	6.0	26
887	60	98	5.8	1.7	C202_0051 EZ703U	200	350	5.072	350/69	3700	3500	5500	23	17.0	6.0	28
964	43	69	4.5	2.3	C202_0047 EZ505U	200	339	4.667	14/3	3700	3500	5500	13	17.0	6.0	26
964	55	91	5.7	1.8	C202_0047 EZ703U	200	339	4.667	14/3	3700	3500	5500	23	17.0	6.0	28
1065	39	63	4.4	2.4	C202_0042 EZ505U	200	308	4.226	486/115	3500	3100	5000	14	17.0	6.0	26
1065	50	82	5.6	1.9	C202_0042 EZ703U	200	308	4.226	486/115	3500	3100	5000	23	17.0	6.0	28
1157	36	58	4.4	2.6	C202_0039 EZ505U	198	283	3.888	486/125	3500	3100	5000	14	17.0	6.0	26
1157	46	75	5.6	2.0	C202_0039 EZ703U	198	283	3.888	486/125	3500	3100	5000	23	17.0	6.0	28
1334	31	50	4.3	2.8	C202_0034 EZ505U	189	246	3.373	2250/667	3500	3100	5000	14	17.0	6.0	26
1334	40	65	5.4	2.2	C202_0034 EZ703U	189	246	3.373	2250/667	3500	3100	5000	24	17.0	6.0	28
1450	29	46	4.2	3.0	C202_0031 EZ505U	181	226	3.103	90/29	3500	3100	5000	14	17.0	6.0	26
1450	36	60	5.4	2.3	C202_0031 EZ703U	181	226	3.103	90/29	3500	3100	5000	24	17.0	6.0	28
1673	25	40	4.1	3.3	C202_0027 EZ505U	157	196	2.690	495/184	3000	2600	4500	15	17.0	6.0	26
1673	32	52	5.2	2.6	C202_0027 EZ703U	157	196	2.690	495/184	3000	2600	4500	24	17.0	6.0	28
1818	23	37	4.0	3.5	C202_0025 EZ505U	144	180	2.475	99/40	3000	2600	4500	15	17.0	6.0	26
1818	29	48	5.2	2.7	C202_0025 EZ703U	144	180	2.475	99/40	3000	2600	4500	25	17.0	6.0	28
2060	20	32	4.0	3.8	C202_0022 EZ505U	127	159	2.184	2160/989	3000	2600	4500	16	17.0	6.0	26
2060	26	42	5.1	2.9	C202_0022 EZ703U	127	159	2.184	2160/989	3000	2600	4500	25	17.0	6.0	28
2060	35	64	6.8	2.2	C202_0022 EZ705U	163	350	2.184	2160/989	3000	2600	4500	38	17.0	6.0	33
2240	19	30	3.9	4.0	C202_0020 EZ505U	117	146	2.009	432/215	3000	2600	4500	16	17.0	6.0	26
2240	24	39	5.0	3.1	C202_0020 EZ703U	117	146	2.009	432/215	3000	2600	4500	26	17.0	6.0	28
2240	32	58	6.7	2.3	C202_0020 EZ705U	159	350	2.009	432/215	3000	2600	4500	38	17.0	6.0	33
C2 (n_{1N} = 6000 min^{-1}, $M_{2acc,max}$ = 230 Nm)																
44	198	221	1.9	1.0	C203_1380 EZ302U	230	400	137.8	16121/117	4000	3900	6500	0.35	14.0	8.3	22
54	159	178	1.7	1.3	C203_1110 EZ302U	230	400	110.6	191149/1728	4000	3900	6500	0.36	14.0	8.3	22
65	133	148	1.5	1.5	C203_0920 EZ302U	230	400	92.40	29939/324	4000	3900	6500	0.36	14.0	8.3	22
65	173	199	2.0	1.2	C203_0920 EZ303U	230	400	92.40	29939/324	4000	3900	6500	0.47	14.0	8.3	22
74	116	129	1.4	1.7	C203_0810 EZ302U	230	400	80.62	11609/144	4000	3900	6500	0.36	14.0	8.3	22
74	151	173	1.9	1.3	C203_0810 EZ303U	230	400	80.62	11609/144	4000	3900	6500	0.47	14.0	8.3	22
74	177	216	2.2	1.1	C203_0810 EZ401U	230	400	80.62	11609/144	4000	3900	6500	1.0	14.0	8.3	24
85	102	115	1.3	2.0	C202_0700 EZ302U	230	302	70.32	7595/108	4000	3900	6500	0.36	14.0	8.3	17
85	134	153	1.8	1.5	C202_0700 EZ303U	230	302	70.32	7595/108	4000	3900	6500	0.47	14.0	8.3	18
85	157	191	2.1	1.3	C202_0700 EZ401U	230	302	70.32	7595/108	4000	3900	6500	1.0	14.0	8.3	19
98	89	100	1.3	2.1	C202_0610 EZ302U	211	263	61.35	2945/48	4000	3900	6500	0.36	14.0	8.3	17
98	117	134	1.8	1.6	C202_0610 EZ303U	211	263	61.35	2945/48	4000	3900	6500	0.47	14.0	8.3	18
98	137	167	2.1	1.4	C202_0610 EZ401U	211	263	61.35	2945/48	4000	3900	6500	1.0	14.0	8.3	19
106	126	153	1.8	1.6	C202_0560 EZ401U	230	400	56.42	1862/33	4000	3900	6500	1.0	14.0	8.3	19
106	186	241	2.7	1.1	C202_0560 EZ501U	230	400	56.42	1862/33	4000	3900	6500	3.0	14.0	8.3	20
106	192	268	2.8	1.0	C202_0560 EZ402U	230	400	56.42	1862/33	4000	3900	6500	1.7	14.0	8.3	20
122	110	134	1.7	1.8	C202_0490 EZ401U	230	400	49.23	1083/22	4000	3900	6500	1.0	14.0	8.3	19
122	162	210	2.5	1.2	C202_0490 EZ501U	230	400	49.23	1083/22	4000	3900	6500	3.0	14.0	8.3	20
122	167	234	2.6	1.2	C202_0490 EZ402U	230	400	49.23	1083/22	4000	3900	6500	1.7	14.0	8.3	20
128	104	127	1.7	1.9	C202_0470 EZ401U	230	400	46.82	2107/45	4000	3900	6500	1.1	14.0	8.3	19
128	154	200	2.5	1.3	C202_0470 EZ501U	230	400	46.82	2107/45	4000	3900	6500	3.0	14.0	8.3	20
128	159	223	2.6	1.3	C202_0470 EZ402U	230	400	46.82	2107/45	4000	3900	6500	1.8	14.0	8.3	20
147	91	111	1.6	2.2	C202_0410 EZ401U	230	400	40.85	817/20	4000	3900	6500	1.1	14.0	8.3	19
147	135	174	2.3	1.5	C202_0410 EZ501U	230	400	40.85	817/20	4000	3900	6500	3.0	14.0	8.3	20
147	139	194	2.4	1.4	C202_0410 EZ402U	230	400	40.85	817/20	4000	3900	6500	1.8	14.0	8.3	20
171	78	96	1.5	2.5	C202_0350 EZ401U	230	400	35.18	1372/39	4000	3900	6500	1.2	14.0	8.3	19
171	116	150	2.2	1.7	C202_0350 EZ501U	230	400	35.18	1372/39	4000	3900	6500	3.1	14.0	8.3	20
171	119	167	2.2	1.7	C202_0350 EZ402U	230	400	35.18	1372/39	4000	3900	6500	1.9	14.0	8.3	20
171	177	266	3.3	1.1	C202_0350 EZ502U	230	400	35.18	1372/39	4000	3900	6500	5.4	14.0	8.3	21
171	177	270	3.3	1.1	C202_0350 EZ701U	230	400	35.18	1372/39	4000	3900	6500	8.7	14.0	8.3	23

n_{2N} [rpm]	M_{2N} [Nm]	$M_{2,0}$ [Nm]	a_{th}	S	Type	M_{2acc} [Nm]	M_{2NOT} [Nm]	i	i_{exakt}	n_{1maxDB} EL1,2,3,4 [rpm]	n_{1maxDB} EL5,6 [rpm]	n_{1maxZB} [rpm]	J_1 [kgcm²]	$\Delta\varphi_2$ [arcmin]	C_2 [Nm/arcmin]	m [kg]
C2 (n_{1N} = 6000 min^{-1}, $M_{2acc,max}$ = 230 Nm)																
171	198	287	3.7	1.0	C202_0350 EZ404U	230	400	35.18	1372/39	4000	3900	6500	3.2	14.0	8.3	22
195	68	83	1.4	2.9	C202_0310 EZ401U	230	400	30.69	399/13	4000	3900	6500	1.2	14.0	8.3	19
195	101	131	2.0	2.0	C202_0310 EZ501U	230	400	30.69	399/13	4000	3900	6500	3.1	14.0	8.3	20
195	104	146	2.1	1.9	C202_0310 EZ402U	230	400	30.69	399/13	4000	3900	6500	1.9	14.0	8.3	20
195	155	232	3.1	1.3	C202_0310 EZ502U	230	400	30.69	399/13	4000	3900	6500	5.4	14.0	8.3	21
195	155	235	3.1	1.3	C202_0310 EZ701U	230	400	30.69	399/13	4000	3900	6500	8.7	14.0	8.3	23
195	173	250	3.4	1.2	C202_0310 EZ404U	230	400	30.69	399/13	4000	3900	6500	3.2	14.0	8.3	22
195	185	316	3.7	1.1	C202_0310 EZ503U	230	400	30.69	399/13	4000	3900	6500	7.8	14.0	8.3	23
212	63	77	1.3	3.2	C202_0280 EZ401U	230	400	28.24	4067/144	4000	3900	6500	1.2	14.0	8.3	19
212	93	121	1.9	2.1	C202_0280 EZ501U	230	400	28.24	4067/144	4000	3900	6500	3.2	14.0	8.3	20
212	96	134	2.0	2.1	C202_0280 EZ402U	230	400	28.24	4067/144	4000	3900	6500	1.9	14.0	8.3	20
212	142	214	2.9	1.4	C202_0280 EZ502U	230	400	28.24	4067/144	4000	3900	6500	5.5	14.0	8.3	21
212	142	216	2.9	1.4	C202_0280 EZ701U	230	400	28.24	4067/144	4000	3900	6500	8.8	14.0	8.3	23
212	159	230	3.3	1.3	C202_0280 EZ404U	230	400	28.24	4067/144	4000	3900	6500	3.3	14.0	8.3	22
212	170	290	3.5	1.2	C202_0280 EZ503U	230	400	28.24	4067/144	4000	3900	6500	7.9	14.0	8.3	23
212	197	392	4.1	1.0	C202_0280 EZ702U	230	400	28.24	4067/144	4000	3900	6500	14	14.0	8.3	26
243	55	67	1.2	3.6	C202_0250 EZ401U	203	400	24.64	1577/64	4000	3900	6500	1.3	14.0	8.3	19
243	81	105	1.8	2.4	C202_0250 EZ501U	230	400	24.64	1577/64	4000	3900	6500	3.2	14.0	8.3	20
243	84	117	1.9	2.3	C202_0250 EZ402U	230	400	24.64	1577/64	4000	3900	6500	2.0	14.0	8.3	20
243	124	186	2.8	1.6	C202_0250 EZ502U	230	400	24.64	1577/64	4000	3900	6500	5.5	14.0	8.3	21
243	124	189	2.8	1.6	C202_0250 EZ701U	230	400	24.64	1577/64	4000	3900	6500	8.8	14.0	8.3	23
243	139	201	3.1	1.4	C202_0250 EZ404U	230	400	24.64	1577/64	4000	3900	6500	3.3	14.0	8.3	22
243	148	253	3.4	1.3	C202_0250 EZ503U	230	400	24.64	1577/64	4000	3900	6500	7.9	14.0	8.3	23
243	172	342	3.9	1.1	C202_0250 EZ702U	230	400	24.64	1577/64	4000	3900	6500	14	14.0	8.3	26
254	53	64	1.2	3.7	C202_0240 EZ401U	195	400	23.59	637/27	4000	3900	6500	1.3	14.0	8.3	19
254	78	101	1.8	2.5	C202_0240 EZ501U	230	400	23.59	637/27	4000	3900	6500	3.3	14.0	8.3	20
254	80	112	1.9	2.4	C202_0240 EZ402U	230	400	23.59	637/27	4000	3900	6500	2.0	14.0	8.3	20
254	119	179	2.8	1.6	C202_0240 EZ502U	230	400	23.59	637/27	4000	3900	6500	5.6	14.0	8.3	21
254	119	181	2.8	1.6	C202_0240 EZ701U	230	400	23.59	637/27	4000	3900	6500	8.9	14.0	8.3	23
254	133	192	3.1	1.5	C202_0240 EZ404U	230	400	23.59	637/27	4000	3900	6500	3.4	14.0	8.3	22
254	142	243	3.3	1.4	C202_0240 EZ503U	230	400	23.59	637/27	4000	3900	6500	8.0	14.0	8.3	23
254	165	327	3.9	1.2	C202_0240 EZ702U	230	400	23.59	637/27	4000	3900	6500	14	14.0	8.3	26
292	46	56	1.2	4.0	C202_0210 EZ401U	170	400	20.58	247/12	4000	3900	6500	1.4	14.0	8.3	19
292	68	88	1.8	2.7	C202_0210 EZ501U	230	400	20.58	247/12	4000	3900	6500	3.3	14.0	8.3	20
292	70	98	1.8	2.6	C202_0210 EZ402U	230	400	20.58	247/12	4000	3900	6500	2.1	14.0	8.3	20
292	104	156	2.7	1.8	C202_0210 EZ502U	230	400	20.58	247/12	4000	3900	6500	5.6	14.0	8.3	21
292	104	158	2.7	1.8	C202_0210 EZ701U	230	400	20.58	247/12	4000	3900	6500	8.9	14.0	8.3	23
292	116	168	3.0	1.6	C202_0210 EZ404U	230	400	20.58	247/12	4000	3900	6500	3.4	14.0	8.3	22
292	124	212	3.3	1.5	C202_0210 EZ503U	230	400	20.58	247/12	4000	3900	6500	8.0	14.0	8.3	23
292	144	286	3.8	1.3	C202_0210 EZ702U	230	400	20.58	247/12	4000	3900	6500	14	14.0	8.3	26
769	26	33	1.9	4.1	C202_0078 EZ501U	121	216	7.800	39/5	4000	3900	6500	3.4	17.0	6.0	20
769	26	37	2.0	4.0	C202_0078 EZ402U	121	216	7.800	39/5	4000	3900	6500	2.1	17.0	6.0	20
769	39	59	3.0	2.7	C202_0078 EZ502U	173	216	7.800	39/5	4000	3900	6500	5.7	17.0	6.0	21
769	39	60	3.0	2.7	C202_0078 EZ701U	151	350	7.800	39/5	4000	3900	6500	9.0	17.0	6.0	23
769	44	64	3.3	2.4	C202_0078 EZ404U	173	216	7.800	39/5	4000	3900	6500	3.5	17.0	6.0	22
769	47	80	3.5	2.2	C202_0078 EZ503U	173	216	7.800	39/5	4000	3900	6500	8.1	17.0	6.0	23
769	54	108	4.1	1.9	C202_0078 EZ702U	200	350	7.800	39/5	4000	3900	6500	14	17.0	6.0	26
C3 (n_{1N} = 2000 min^{-1}, $M_{2acc,max}$ = 330 Nm)																
341	222	249	9.8	1.0	C302_0059 EZ813U	330	550	5.859	2584/441	3500	3100	5500	106	16.0	7.1	56
397	191	214	9.5	1.1	C302_0050 EZ813U	330	550	5.038	403/80	3500	3100	5500	106	16.0	7.1	56
428	177	198	9.4	1.2	C302_0047 EZ813U	330	550	4.675	589/126	3500	3100	5500	106	16.0	7.1	56
479	158	177	9.2	1.3	C302_0042 EZ813U	330	550	4.179	117/28	3200	2800	4800	107	16.0	7.1	56
516	147	164	9.1	1.3	C302_0039 EZ813U	324	550	3.878	190/49	3200	2800	4800	107	16.0	7.1	56
597	127	142	8.9	1.5	C302_0034 EZ813U	309	550	3.352	429/128	3200	2800	4800	108	16.0	7.1	56
643	118	132	8.8	1.6	C302_0031 EZ813U	301	550	3.110	1045/336	3200	2800	4800	108	16.0	7.1	56
643	174	207	13	1.0	C302_0031 EZ815U	301	550	3.110	1045/336	3200	2800	4800	171	16.0	7.1	68
739	102	115	8.6	1.7	C302_0027 EZ813U	287	525	2.705	1677/620	2700	2300	4000	109	16.0	7.1	56
739	152	180	13	1.1	C302_0027 EZ815U	287	525	2.705	1677/620	2700	2300	4000	172	16.0	7.1	68
797	95	106	8.5	1.8	C302_0025 EZ813U	280	487	2.510	1634/651	2700	2300	4000	110	16.0	7.1	56
797	141	167	13	1.2	C302_0025 EZ815U	280	487	2.510	1634/651	2700	2300	4000	173	16.0	7.1	68
919	82	92	8.3	2.0	C302_0022 EZ813U	267	422	2.177	468/215	2700	2300	4000	111	16.0	7.1	56
919	122	145	12	1.3	C302_0022 EZ815U	267	422	2.177	468/215	2700	2300	4000	174	16.0	7.1	68
990	76	86	8.2	2.1	C302_0020 EZ813U	261	392	2.020	608/301	2700	2300	4000	111	16.0	7.1	56
990	113	135	12	1.4	C302_0020 EZ815U	261	392	2.020	608/301	2700	2300	4000	174	16.0	7.1	68

n_{2N} [rpm]	M_{2N} [Nm]	$M_{2,0}$ [Nm]	a_{th}	S	Type	M_{2acc} [Nm]	M_{2NOT} [Nm]	i	i_{exakt}	n_{1maxDB} EL1,2,3,4 [rpm]	n_{1maxDB} EL5,6 [rpm]	n_{1maxZB} [rpm]	J_1 [kgcm²]	$\Delta\varphi_2$ [arcmin]	C_2 [Nm/arcmin]	m [kg]
C3 (n_{1N} = 3000 min^{-1}, $M_{2acc,max}$ = 400 Nm)																
14	334	353	1.5	1.0	C303_2200 EZ302U	350	700	219.9	58045/264	3800	3500	6000	0.35	13.0	8.7	26
16	278	294	1.4	1.3	C303_1830 EZ302U	350	700	182.8	1645/9	3800	3500	6000	0.35	13.0	8.7	26
22	209	220	1.2	1.7	C303_1370 EZ302U	350	700	137.2	59267/432	3800	3500	6000	0.36	13.0	8.7	26
22	271	287	1.6	1.3	C303_1370 EZ303U	350	700	137.2	59267/432	3800	3500	6000	0.47	13.0	8.7	27
27	167	176	1.1	2.1	C303_1100 EZ302U	350	700	109.6	94705/864	3800	3500	6000	0.37	13.0	8.7	26
27	217	229	1.4	1.6	C303_1100 EZ303U	350	700	109.6	94705/864	3800	3500	6000	0.48	13.0	8.7	27
27	293	314	1.9	1.2	C303_1100 EZ401U	350	700	109.6	94705/864	3800	3500	6000	1.0	13.0	8.7	28
33	140	148	1.0	2.5	C303_0920 EZ302U	350	590	91.93	39715/432	3800	3500	6000	0.38	13.0	8.7	26
33	182	192	1.3	1.9	C303_0920 EZ303U	350	590	91.93	39715/432	3800	3500	6000	0.49	13.0	8.7	27
33	246	264	1.8	1.4	C303_0920 EZ401U	350	590	91.93	39715/432	3800	3500	6000	1.0	13.0	8.7	28
37	124	131	0.9	2.8	C303_0810 EZ302U	389	522	81.47	1222/15	3800	3500	6000	0.38	13.0	8.7	26
37	161	171	1.2	2.2	C303_0810 EZ303U	400	522	81.47	1222/15	3800	3500	6000	0.49	13.0	8.7	27
37	218	234	1.7	1.6	C303_0810 EZ401U	400	522	81.47	1222/15	3800	3500	6000	1.0	13.0	8.7	28
37	331	361	2.5	1.1	C303_0800 EZ501U	400	700	80.43	6032/75	3800	3500	6000	3.1	13.0	8.7	29
43	291	319	2.4	1.2	C302_0700 EZ501U	350	700	69.88	559/8	3800	3500	6000	3.0	13.0	8.7	25
48	258	282	2.4	1.3	C302_0620 EZ501U	397	662	61.92	1548/25	3800	3500	6000	3.0	13.0	8.7	25
53	234	256	2.1	1.5	C302_0560 EZ501U	350	700	56.14	1235/22	3800	3500	6000	3.1	13.0	8.7	25
60	207	227	2.0	1.7	C302_0500 EZ501U	400	700	49.75	2736/55	3800	3500	6000	3.1	13.0	8.7	25
64	195	213	2.0	1.8	C302_0470 EZ501U	350	700	46.67	140/3	3800	3500	6000	3.1	13.0	8.7	25
64	335	362	3.4	1.0	C302_0470 EZ502U	350	700	46.67	140/3	3800	3500	6000	5.4	13.0	8.7	27
64	335	376	3.4	1.0	C302_0470 EZ701U	350	700	46.67	140/3	3800	3500	6000	8.7	13.0	8.7	28
73	172	189	1.8	2.0	C302_0410 EZ501U	400	700	41.35	2688/65	3800	3500	6000	3.1	13.0	8.7	25
73	297	321	3.2	1.2	C302_0410 EZ502U	400	700	41.35	2688/65	3800	3500	6000	5.4	13.0	8.7	27
73	297	333	3.2	1.2	C302_0410 EZ701U	400	700	41.35	2688/65	3800	3500	6000	8.7	13.0	8.7	28
86	146	160	1.7	2.4	C302_0350 EZ501U	350	700	35.03	1261/36	3800	3500	6000	3.3	13.0	8.7	25
86	251	272	2.9	1.4	C302_0350 EZ502U	350	700	35.03	1261/36	3800	3500	6000	5.6	13.0	8.7	27
86	251	282	2.9	1.4	C302_0350 EZ701U	350	700	35.03	1261/36	3800	3500	6000	8.9	13.0	8.7	28
86	330	377	3.8	1.1	C302_0350 EZ503U	350	700	35.03	1261/36	3800	3500	6000	8.0	13.0	8.7	28
97	129	142	1.6	2.7	C302_0310 EZ501U	400	700	31.04	776/25	3800	3500	6000	3.3	13.0	8.7	25
97	223	241	2.7	1.6	C302_0310 EZ502U	400	700	31.04	776/25	3800	3500	6000	5.6	13.0	8.7	27
97	223	250	2.7	1.6	C302_0310 EZ701U	400	700	31.04	776/25	3800	3500	6000	8.9	13.0	8.7	28
97	292	334	3.6	1.2	C302_0310 EZ503U	400	700	31.04	776/25	3800	3500	6000	8.0	13.0	8.7	28
107	117	128	1.5	3.0	C302_0280 EZ501U	350	700	27.99	2015/72	3800	3500	6000	3.4	13.0	8.7	25
107	201	217	2.6	1.7	C302_0280 EZ502U	350	700	27.99	2015/72	3800	3500	6000	5.7	13.0	8.7	27
107	201	225	2.6	1.7	C302_0280 EZ701U	350	700	27.99	2015/72	3800	3500	6000	9.0	13.0	8.7	28
107	263	301	3.4	1.3	C302_0280 EZ503U	350	700	27.99	2015/72	3800	3500	6000	8.1	13.0	8.7	28
107	326	391	4.2	1.1	C302_0280 EZ702U	350	700	27.99	2015/72	3800	3500	6000	14	13.0	8.7	31
121	103	113	1.4	3.4	C302_0250 EZ501U	385	666	24.80	124/5	3800	3500	6000	3.4	13.0	8.7	25
121	178	192	2.5	2.0	C302_0250 EZ502U	400	666	24.80	124/5	3800	3500	6000	5.7	13.0	8.7	27
121	178	200	2.5	2.0	C302_0250 EZ701U	400	700	24.80	124/5	3800	3500	6000	9.0	13.0	8.7	28
121	233	267	3.2	1.5	C302_0250 EZ503U	400	666	24.80	124/5	3800	3500	6000	8.1	13.0	8.7	28
121	289	346	4.0	1.2	C302_0250 EZ702U	400	700	24.80	124/5	3800	3500	6000	14	13.0	8.7	31
121	325	385	4.5	1.1	C302_0250 EZ505U	400	700	24.80	124/5	3800	3500	6000	13	13.0	8.7	31
128	98	107	1.4	3.6	C302_0230 EZ501U	350	683	23.47	845/36	3800	3500	6000	3.6	13.0	8.7	25
128	168	182	2.4	2.1	C302_0230 EZ502U	350	683	23.47	845/36	3800	3500	6000	5.9	13.0	8.7	27
128	168	189	2.4	2.1	C302_0230 EZ701U	350	700	23.47	845/36	3800	3500	6000	9.2	13.0	8.7	28
128	221	253	3.1	1.6	C302_0230 EZ503U	350	683	23.47	845/36	3800	3500	6000	8.3	13.0	8.7	28
128	273	328	3.9	1.3	C302_0230 EZ702U	350	700	23.47	845/36	3800	3500	6000	14	13.0	8.7	31
128	307	364	4.3	1.1	C302_0230 EZ505U	350	700	23.47	845/36	3800	3500	6000	13	13.0	8.7	31
144	87	95	1.3	4.0	C302_0210 EZ501U	323	605	20.80	104/5	3800	3500	6000	3.6	13.0	8.7	25
144	149	161	2.2	2.3	C302_0210 EZ502U	400	605	20.80	104/5	3800	3500	6000	5.9	13.0	8.7	27
144	149	167	2.2	2.3	C302_0210 EZ701U	400	700	20.80	104/5	3800	3500	6000	9.2	13.0	8.7	28
144	196	224	2.9	1.8	C302_0210 EZ503U	400	605	20.80	104/5	3800	3500	6000	8.3	13.0	8.7	28
144	242	291	3.6	1.4	C302_0210 EZ702U	400	700	20.80	104/5	3800	3500	6000	14	13.0	8.7	31
144	272	323	4.1	1.3	C302_0210 EZ505U	400	700	20.80	104/5	3800	3500	6000	13	13.0	8.7	31
144	333	420	5.0	1.1	C302_0210 EZ703U	400	700	20.80	104/5	3800	3500	6000	22	13.0	8.7	33
171	126	141	2.1	2.7	C302_0175 EZ701U	340	700	17.54	1105/63	3500	3100	5500	9.6	13.0	8.7	28
171	204	245	3.4	1.7	C302_0175 EZ702U	350	700	17.54	1105/63	3500	3100	5500	15	13.0	8.7	31
171	230	272	3.8	1.5	C302_0175 EZ505U	350	700	17.54	1105/63	3500	3100	5500	13	13.0	8.7	31
171	281	354	4.7	1.2	C302_0175 EZ703U	350	700	17.54	1105/63	3500	3100	5500	23	13.0	8.7	33
193	112	125	2.1	2.9	C302_0155 EZ701U	302	700	15.54	544/35	3500	3100	5500	9.6	13.0	8.7	28
193	181	217	3.4	1.8	C302_0155 EZ702U	400	700	15.54	544/35	3500	3100	5500	15	13.0	8.7	31
193	204	241	3.8	1.6	C302_0155 EZ505U	400	700	15.54	544/35	3500	3100	5500	13	13.0	8.7	31
193	249	314	4.6	1.3	C302_0155 EZ703U	400	700	15.54	544/35	3500	3100	5500	23	13.0	8.7	33

n_{2N} [rpm]	M_{2N} [Nm]	$M_{2,0}$ [Nm]	a_{th}	S	Type	M_{2acc} [Nm]	M_{2NOT} [Nm]	i	i_{exakt}	n_{1maxDB} EL1,2,3,4 [rpm]	n_{1maxDB} EL5,6 [rpm]	n_{1maxZB} [rpm]	J_1 [kgcm²]	$\Delta\varphi_2$ [arcmin]	C_2 [Nm/arcmin]	m [kg]
C3 (n_{1N} = 3000 min^{-1}, $M_{2acc,max}$ = 400 Nm)																
193	321	455	5.9	1.0	C302_0155 EZ705U	400	700	15.54	544/35	3500	3100	5500	35	13.0	8.7	38
214	100	113	2.0	3.2	C302_0140 EZ701U	271	700	13.99	2015/144	3500	3100	5500	10	13.0	8.7	28
214	163	195	3.3	1.9	C302_0140 EZ702U	350	700	13.99	2015/144	3500	3100	5500	15	13.0	8.7	31
214	183	217	3.7	1.7	C302_0140 EZ505U	350	700	13.99	2015/144	3500	3100	5500	14	13.0	8.7	31
214	224	282	4.5	1.4	C302_0140 EZ703U	350	700	13.99	2015/144	3500	3100	5500	23	13.0	8.7	33
214	289	410	5.8	1.1	C302_0140 EZ705U	350	700	13.99	2015/144	3500	3100	5500	35	13.0	8.7	38
242	89	100	2.0	3.4	C302_0125 EZ701U	241	700	12.40	62/5	3500	3100	5500	10	13.0	8.7	28
242	144	173	3.2	2.1	C302_0125 EZ702U	400	700	12.40	62/5	3500	3100	5500	15	13.0	8.7	31
242	162	192	3.6	1.9	C302_0125 EZ505U	400	700	12.40	62/5	3500	3100	5500	14	13.0	8.7	31
242	198	250	4.4	1.5	C302_0125 EZ703U	400	700	12.40	62/5	3500	3100	5500	23	13.0	8.7	33
242	256	363	5.7	1.2	C302_0125 EZ705U	400	700	12.40	62/5	3500	3100	5500	36	13.0	8.7	38
258	83	93	2.0	3.6	C302_0115 EZ701U	225	700	11.61	325/28	3200	2800	4800	10	13.0	8.7	28
258	135	162	3.2	2.2	C302_0115 EZ702U	350	700	11.61	325/28	3200	2800	4800	16	13.0	8.7	31
258	152	180	3.6	2.0	C302_0115 EZ505U	350	700	11.61	325/28	3200	2800	4800	14	13.0	8.7	31
258	186	234	4.4	1.6	C302_0115 EZ703U	350	700	11.61	325/28	3200	2800	4800	24	13.0	8.7	33
258	240	340	5.7	1.2	C302_0115 EZ705U	350	700	11.61	325/28	3200	2800	4800	36	13.0	8.7	38
292	74	83	1.9	3.9	C302_0105 EZ701U	200	700	10.29	72/7	3200	2800	4800	10	13.0	8.7	28
292	120	144	3.1	2.4	C302_0105 EZ702U	400	700	10.29	72/7	3200	2800	4800	16	13.0	8.7	31
292	135	160	3.5	2.1	C302_0105 EZ505U	400	700	10.29	72/7	3200	2800	4800	14	13.0	8.7	31
292	165	208	4.3	1.7	C302_0105 EZ703U	400	700	10.29	72/7	3200	2800	4800	24	13.0	8.7	33
292	213	301	5.6	1.3	C302_0105 EZ705U	400	700	10.29	72/7	3200	2800	4800	36	13.0	8.7	38
322	67	75	1.9	4.1	C302_0093 EZ701U	181	678	9.310	3575/384	3200	2800	4800	11	13.0	8.7	28
322	108	130	3.1	2.6	C302_0093 EZ702U	350	678	9.310	3575/384	3200	2800	4800	16	13.0	8.7	31
322	122	144	3.5	2.3	C302_0093 EZ505U	350	678	9.310	3575/384	3200	2800	4800	15	13.0	8.7	31
322	149	188	4.2	1.9	C302_0093 EZ703U	350	678	9.310	3575/384	3200	2800	4800	24	13.0	8.7	33
322	192	273	5.5	1.4	C302_0093 EZ705U	350	700	9.310	3575/384	3200	2800	4800	37	13.0	8.7	38
364	59	66	1.9	4.5	C302_0083 EZ701U	160	600	8.250	33/4	3200	2800	4800	11	13.0	8.7	28
364	96	115	3.0	2.8	C302_0083 EZ702U	328	600	8.250	33/4	3200	2800	4800	16	13.0	8.7	31
364	108	128	3.4	2.5	C302_0083 EZ505U	400	600	8.250	33/4	3200	2800	4800	15	13.0	8.7	31
364	132	166	4.1	2.0	C302_0083 EZ703U	400	600	8.250	33/4	3200	2800	4800	24	13.0	8.7	33
364	170	242	5.4	1.6	C302_0083 EZ705U	400	700	8.250	33/4	3200	2800	4800	37	13.0	8.7	38
383	56	61	2.6	3.2	C302_0078 EZ502U	183	228	7.841	494/63	3800	3500	6000	6.1	16.0	7.1	27
383	56	63	2.2	3.9	C302_0078 EZ701U	152	469	7.841	494/63	3800	3500	6000	9.4	16.0	7.1	28
383	74	84	3.5	2.5	C302_0078 EZ503U	183	228	7.841	494/63	3800	3500	6000	8.5	16.0	7.1	28
383	91	110	3.6	2.4	C302_0078 EZ702U	312	469	7.841	494/63	3800	3500	6000	15	16.0	7.1	31
383	103	122	4.1	2.1	C302_0078 EZ505U	330	469	7.841	494/63	3800	3500	6000	13	16.0	7.1	31
383	125	158	5.0	1.7	C302_0078 EZ703U	330	469	7.841	494/63	3800	3500	6000	22	16.0	7.1	33
383	162	230	6.4	1.3	C302_0078 EZ705U	330	550	7.841	494/63	3800	3500	6000	35	16.0	7.1	38
475	45	51	2.1	4.5	C302_0063 EZ701U	122	434	6.314	221/35	3500	3100	5500	9.9	16.0	7.1	28
475	73	88	3.5	2.7	C302_0063 EZ702U	251	434	6.314	221/35	3500	3100	5500	15	16.0	7.1	31
475	83	98	3.9	2.4	C302_0063 EZ505U	330	434	6.314	221/35	3500	3100	5500	14	16.0	7.1	31
475	101	127	4.8	2.0	C302_0063 EZ703U	330	434	6.314	221/35	3500	3100	5500	23	16.0	7.1	33
475	130	185	6.2	1.5	C302_0063 EZ705U	330	550	6.314	221/35	3500	3100	5500	35	16.0	7.1	38
512	42	47	2.1	4.7	C302_0059 EZ701U	114	403	5.859	2584/441	3500	3100	5500	9.9	16.0	7.1	28
512	68	82	3.4	2.9	C302_0059 EZ702U	233	403	5.859	2584/441	3500	3100	5500	15	16.0	7.1	31
512	77	91	3.9	2.6	C302_0059 EZ505U	322	403	5.859	2584/441	3500	3100	5500	14	16.0	7.1	31
512	94	118	4.7	2.1	C302_0059 EZ703U	322	403	5.859	2584/441	3500	3100	5500	23	16.0	7.1	33
512	121	172	6.1	1.6	C302_0059 EZ705U	330	550	5.859	2584/441	3500	3100	5500	35	16.0	7.1	38
595	59	70	3.4	3.2	C302_0050 EZ702U	200	367	5.038	403/80	3500	3100	5500	16	16.0	7.1	31
595	66	78	3.8	2.8	C302_0050 EZ505U	293	367	5.038	403/80	3500	3100	5500	14	16.0	7.1	31
595	81	102	4.6	2.3	C302_0050 EZ703U	293	367	5.038	403/80	3500	3100	5500	24	16.0	7.1	33
595	104	148	6.0	1.8	C302_0050 EZ705U	330	550	5.038	403/80	3500	3100	5500	36	16.0	7.1	38
642	54	65	3.3	3.4	C302_0047 EZ702U	186	340	4.675	589/126	3500	3100	5500	16	16.0	7.1	31
642	61	73	3.7	3.0	C302_0047 EZ505U	272	340	4.675	589/126	3500	3100	5500	14	16.0	7.1	31
642	75	94	4.6	2.4	C302_0047 EZ703U	272	340	4.675	589/126	3500	3100	5500	24	16.0	7.1	33
642	97	137	5.9	1.9	C302_0047 EZ705U	330	550	4.675	589/126	3500	3100	5500	36	16.0	7.1	38
718	49	58	3.2	3.6	C302_0042 EZ702U	166	304	4.179	117/28	3200	2800	4800	16	16.0	7.1	31
718	55	65	3.7	3.2	C302_0042 EZ505U	243	304	4.179	117/28	3200	2800	4800	15	16.0	7.1	31
718	67	84	4.5	2.6	C302_0042 EZ703U	243	304	4.179	117/28	3200	2800	4800	24	16.0	7.1	33
718	86	122	5.8	2.0	C302_0042 EZ705U	330	550	4.179	117/28	3200	2800	4800	37	16.0	7.1	38
774	45	54	3.2	3.8	C302_0039 EZ702U	154	282	3.878	190/49	3200	2800	4800	16	16.0	7.1	31
774	51	60	3.6	3.4	C302_0039 EZ505U	226	282	3.878	190/49	3200	2800	4800	15	16.0	7.1	31
774	62	78	4.4	2.8	C302_0039 EZ703U	226	282	3.878	190/49	3200	2800	4800	24	16.0	7.1	33
774	80	114	5.7	2.1	C302_0039 EZ705U	324	550	3.878	190/49	3200	2800	4800	37	16.0	7.1	38

n_{2N} [rpm]	M_{2N} [Nm]	$M_{2,0}$ [Nm]	a_{th}	S	Type	M_{2acc} [Nm]	M_{2NOT} [Nm]	i	i_{exakt}	n_{1maxDB} EL1,2,3,4 [rpm]	n_{1maxDB} EL5,6 [rpm]	n_{1maxZB} [rpm]	J_1 [kgcm²]	$\Delta\varphi_2$ [arcmin]	C_2 [Nm/arcmin]	m [kg]
C3 (n_{1N} = 3000 min^{-1}, $M_{2acc,max}$ = 400 Nm)																
895	39	47	3.1	4.2	C302_0034 EZ702U	133	244	3.352	429/128	3200	2800	4800	17	16.0	7.1	31
895	44	52	3.5	3.7	C302_0034 EZ505U	195	244	3.352	429/128	3200	2800	4800	16	16.0	7.1	31
895	54	68	4.3	3.0	C302_0034 EZ703U	195	244	3.352	429/128	3200	2800	4800	25	16.0	7.1	33
895	69	98	5.6	2.4	C302_0034 EZ705U	309	550	3.352	429/128	3200	2800	4800	37	16.0	7.1	38
965	36	43	3.1	4.4	C302_0031 EZ702U	124	226	3.110	1045/336	3200	2800	4800	17	16.0	7.1	31
965	41	48	3.5	3.9	C302_0031 EZ505U	181	226	3.110	1045/336	3200	2800	4800	16	16.0	7.1	31
965	50	63	4.3	3.2	C302_0031 EZ703U	181	226	3.110	1045/336	3200	2800	4800	25	16.0	7.1	33
965	64	91	5.5	2.5	C302_0031 EZ705U	301	550	3.110	1045/336	3200	2800	4800	38	16.0	7.1	38
1109	56	79	5.4	2.7	C302_0027 EZ705U	273	525	2.705	1677/620	2700	2300	4000	39	16.0	7.1	38
1195	52	74	5.3	2.9	C302_0025 EZ705U	253	487	2.510	1634/651	2700	2300	4000	39	16.0	7.1	38
1378	45	64	5.2	3.1	C302_0022 EZ705U	220	422	2.177	468/215	2700	2300	4000	41	16.0	7.1	38
1485	42	59	5.1	3.3	C302_0020 EZ705U	204	392	2.020	608/301	2700	2300	4000	41	16.0	7.1	38
C3 (n_{1N} = 4000 min^{-1}, $M_{2acc,max}$ = 400 Nm)																
389	251	436	7.2	1.0	C302_0105 EZ813U	400	700	10.29	72/7	3200	2800	4800	106	13.0	8.7	56
430	228	395	7.1	1.1	C302_0093 EZ813U	350	700	9.310	3575/384	3200	2800	4800	107	13.0	8.7	56
430	236	606	7.4	1.1	C302_0093 EZ815U	350	700	9.310	3575/384	3200	2800	4800	170	13.0	8.7	68
485	202	350	7.0	1.2	C302_0083 EZ813U	400	700	8.250	33/4	3200	2800	4800	107	13.0	8.7	56
485	209	537	7.2	1.2	C302_0083 EZ815U	400	700	8.250	33/4	3200	2800	4800	170	13.0	8.7	68
510	192	332	8.3	1.0	C302_0078 EZ813U	330	550	7.841	494/63	3800	3500	6000	105	16.0	7.1	56
634	154	268	8.0	1.2	C302_0063 EZ813U	330	550	6.314	221/35	3500	3100	5500	106	16.0	7.1	56
634	160	411	8.3	1.1	C302_0063 EZ815U	330	550	6.314	221/35	3500	3100	5500	169	16.0	7.1	68
683	143	248	7.9	1.2	C302_0059 EZ813U	330	550	5.859	2584/441	3500	3100	5500	106	16.0	7.1	56
683	148	382	8.2	1.2	C302_0059 EZ815U	330	550	5.859	2584/441	3500	3100	5500	169	16.0	7.1	68
794	123	214	7.7	1.4	C302_0050 EZ813U	330	550	5.038	403/80	3500	3100	5500	106	16.0	7.1	56
794	128	328	8.0	1.3	C302_0050 EZ815U	330	550	5.038	403/80	3500	3100	5500	169	16.0	7.1	68
856	114	198	7.7	1.5	C302_0047 EZ813U	330	550	4.675	589/126	3500	3100	5500	106	16.0	7.1	56
856	118	304	7.9	1.4	C302_0047 EZ815U	330	550	4.675	589/126	3500	3100	5500	169	16.0	7.1	68
957	102	177	7.5	1.6	C302_0042 EZ813U	330	550	4.179	117/28	3200	2800	4800	107	16.0	7.1	56
957	106	272	7.8	1.5	C302_0042 EZ815U	330	550	4.179	117/28	3200	2800	4800	170	16.0	7.1	68
1031	95	164	7.4	1.6	C302_0039 EZ813U	324	550	3.878	190/49	3200	2800	4800	107	16.0	7.1	56
1031	98	253	7.7	1.6	C302_0039 EZ815U	324	550	3.878	190/49	3200	2800	4800	170	16.0	7.1	68
1193	82	142	7.2	1.8	C302_0034 EZ813U	309	550	3.352	429/128	3200	2800	4800	108	16.0	7.1	56
1193	85	218	7.5	1.7	C302_0034 EZ815U	309	550	3.352	429/128	3200	2800	4800	171	16.0	7.1	68
1286	76	132	7.1	1.9	C302_0031 EZ813U	301	550	3.110	1045/336	3200	2800	4800	108	16.0	7.1	56
1286	79	203	7.4	1.8	C302_0031 EZ815U	301	550	3.110	1045/336	3200	2800	4800	171	16.0	7.1	68
1479	66	115	7.0	2.1	C302_0027 EZ813U	287	525	2.705	1677/620	2700	2300	4000	109	16.0	7.1	56
1479	69	176	7.2	2.0	C302_0027 EZ815U	287	525	2.705	1677/620	2700	2300	4000	172	16.0	7.1	68
1594	61	106	6.9	2.2	C302_0025 EZ813U	280	487	2.510	1634/651	2700	2300	4000	110	16.0	7.1	56
1594	64	163	7.1	2.1	C302_0025 EZ815U	280	487	2.510	1634/651	2700	2300	4000	173	16.0	7.1	68
1837	53	92	6.7	2.4	C302_0022 EZ813U	267	422	2.177	468/215	2700	2300	4000	111	16.0	7.1	56
1837	55	142	7.0	2.3	C302_0022 EZ815U	267	422	2.177	468/215	2700	2300	4000	174	16.0	7.1	68
1980	49	86	6.7	2.5	C302_0020 EZ813U	261	392	2.020	608/301	2700	2300	4000	111	16.0	7.1	56
1980	51	132	6.9	2.5	C302_0020 EZ815U	261	392	2.020	608/301	2700	2300	4000	174	16.0	7.1	68
C3 (n_{1N} = 4500 min^{-1}, $M_{2acc,max}$ = 400 Nm)																
128	323	520	3.7	1.1	C302_0350 EZ505U	350	700	35.03	1261/36	3800	3500	6000	13	13.0	8.7	31
145	286	461	3.5	1.2	C302_0310 EZ505U	400	700	31.04	776/25	3800	3500	6000	13	13.0	8.7	31
161	258	415	3.3	1.4	C302_0280 EZ505U	350	700	27.99	2015/72	3800	3500	6000	13	13.0	8.7	31
161	328	543	4.3	1.1	C302_0280 EZ703U	350	700	27.99	2015/72	3800	3500	6000	22	13.0	8.7	33
181	229	368	3.3	1.5	C302_0250 EZ505U	400	700	24.80	124/5	3800	3500	6000	13	13.0	8.7	31
181	291	481	4.2	1.2	C302_0250 EZ703U	400	700	24.80	124/5	3800	3500	6000	22	13.0	8.7	33
192	216	348	3.3	1.5	C302_0230 EZ505U	350	700	23.47	845/36	3800	3500	6000	13	13.0	8.7	31
192	275	455	4.1	1.2	C302_0230 EZ703U	350	700	23.47	845/36	3800	3500	6000	22	13.0	8.7	33
216	192	309	3.2	1.7	C302_0210 EZ505U	400	700	20.80	104/5	3800	3500	6000	13	13.0	8.7	31
216	244	404	4.1	1.3	C302_0210 EZ703U	400	700	20.80	104/5	3800	3500	6000	22	13.0	8.7	33
257	162	260	3.1	1.9	C302_0175 EZ505U	350	700	17.54	1105/63	3500	3100	5500	13	13.0	8.7	31
257	206	340	3.9	1.5	C302_0175 EZ703U	350	700	17.54	1105/63	3500	3100	5500	23	13.0	8.7	33
257	279	510	5.3	1.1	C302_0175 EZ705U	350	700	17.54	1105/63	3500	3100	5500	35	13.0	8.7	38
290	143	231	3.0	2.0	C302_0155 EZ505U	400	700	15.54	544/35	3500	3100	5500	13	13.0	8.7	31
290	182	302	3.9	1.6	C302_0155 EZ703U	400	700	15.54	544/35	3500	3100	5500	23	13.0	8.7	33
290	247	452	5.2	1.2	C302_0155 EZ705U	400	700	15.54	544/35	3500	3100	5500	35	13.0	8.7	38
322	129	208	3.0	2.2	C302_0140 EZ505U	350	700	13.99	2015/144	3500	3100	5500	14	13.0	8.7	31
322	164	271	3.8	1.7	C302_0140 EZ703U	350	700	13.99	2015/144	3500	3100	5500	23	13.0	8.7	33
322	223	407	5.1	1.2	C302_0140 EZ705U	350	700	13.99	2015/144	3500	3100	5500	35	13.0	8.7	38
363	114	184	2.9	2.3	C302_0125 EZ505U	400	700	12.40	62/5	3500	3100	5500	14	13.0	8.7	31

n_{2N} [rpm]	M_{2N} [Nm]	$M_{2,0}$ [Nm]	a_{th}	S	Type	M_{2acc} [Nm]	M_{2NOT} [Nm]	i	i_{exakt}	n_{1maxDB} EL1,2,3,4 [rpm]	n_{1maxDB} EL5,6 [rpm]	n_{1maxZB} [rpm]	J_1 [kgcm²]	$\Delta\varphi_2$ [arcmin]	C_2 [Nm/arcmin]	m [kg]
C3 (n_{1N} = 4500 min^{-1}, $M_{2acc,max}$ = 400 Nm)																
363	146	241	3.7	1.8	C302_0125 EZ703U	400	700	12.40	62/5	3500	3100	5500	23	13.0	8.7	33
363	197	361	5.0	1.4	C302_0125 EZ705U	400	700	12.40	62/5	3500	3100	5500	36	13.0	8.7	38
388	107	172	2.9	2.4	C302_0115 EZ505U	350	700	11.61	325/28	3200	2800	4800	14	13.0	8.7	31
388	136	225	3.7	1.9	C302_0115 EZ703U	350	700	11.61	325/28	3200	2800	4800	24	13.0	8.7	33
388	185	338	5.0	1.4	C302_0115 EZ705U	350	700	11.61	325/28	3200	2800	4800	36	13.0	8.7	38
437	95	153	2.8	2.6	C302_0105 EZ505U	400	700	10.29	72/7	3200	2800	4800	14	13.0	8.7	31
437	121	200	3.6	2.1	C302_0105 EZ703U	400	700	10.29	72/7	3200	2800	4800	24	13.0	8.7	33
437	164	299	4.9	1.5	C302_0105 EZ705U	400	700	10.29	72/7	3200	2800	4800	36	13.0	8.7	38
483	86	138	2.8	2.8	C302_0093 EZ505U	350	678	9.310	3575/384	3200	2800	4800	15	13.0	8.7	31
483	109	181	3.6	2.2	C302_0093 EZ703U	350	678	9.310	3575/384	3200	2800	4800	24	13.0	8.7	33
483	148	271	4.8	1.6	C302_0093 EZ705U	350	700	9.310	3575/384	3200	2800	4800	37	13.0	8.7	38
545	76	122	2.7	3.1	C302_0083 EZ505U	400	600	8.250	33/4	3200	2800	4800	15	13.0	8.7	31
545	97	160	3.5	2.4	C302_0083 EZ703U	400	600	8.250	33/4	3200	2800	4800	24	13.0	8.7	33
545	131	240	4.7	1.8	C302_0083 EZ705U	400	700	8.250	33/4	3200	2800	4800	37	13.0	8.7	38
574	72	116	3.3	2.6	C302_0078 EZ505U	330	469	7.841	494/63	3800	3500	6000	13	16.0	7.1	31
574	92	152	4.2	2.1	C302_0078 EZ703U	330	469	7.841	494/63	3800	3500	6000	22	16.0	7.1	33
574	125	228	5.6	1.5	C302_0078 EZ705U	330	550	7.841	494/63	3800	3500	6000	35	16.0	7.1	38
713	58	94	3.2	3.0	C302_0063 EZ505U	330	434	6.314	221/35	3500	3100	5500	14	16.0	7.1	31
713	74	122	4.0	2.4	C302_0063 EZ703U	330	434	6.314	221/35	3500	3100	5500	23	16.0	7.1	33
713	100	184	5.4	1.8	C302_0063 EZ705U	330	550	6.314	221/35	3500	3100	5500	35	16.0	7.1	38
768	54	87	3.1	3.2	C302_0059 EZ505U	322	403	5.859	2584/441	3500	3100	5500	14	16.0	7.1	31
768	69	114	4.0	2.5	C302_0059 EZ703U	322	403	5.859	2584/441	3500	3100	5500	23	16.0	7.1	33
768	93	170	5.4	1.8	C302_0059 EZ705U	330	550	5.859	2584/441	3500	3100	5500	35	16.0	7.1	38
893	46	75	3.0	3.5	C302_0050 EZ505U	293	367	5.038	403/80	3500	3100	5500	14	16.0	7.1	31
893	59	98	3.9	2.8	C302_0050 EZ703U	293	367	5.038	403/80	3500	3100	5500	24	16.0	7.1	33
893	80	147	5.2	2.0	C302_0050 EZ705U	330	550	5.038	403/80	3500	3100	5500	36	16.0	7.1	38
963	43	69	3.0	3.7	C302_0047 EZ505U	272	340	4.675	589/126	3500	3100	5500	14	16.0	7.1	31
963	55	91	3.8	2.9	C302_0047 EZ703U	272	340	4.675	589/126	3500	3100	5500	24	16.0	7.1	33
963	74	136	5.2	2.1	C302_0047 EZ705U	330	550	4.675	589/126	3500	3100	5500	36	16.0	7.1	38
1077	39	62	2.9	4.0	C302_0042 EZ505U	243	304	4.179	117/28	3200	2800	4800	15	16.0	7.1	31
1077	49	81	3.8	3.1	C302_0042 EZ703U	243	304	4.179	117/28	3200	2800	4800	24	16.0	7.1	33
1077	66	122	5.1	2.3	C302_0042 EZ705U	330	550	4.179	117/28	3200	2800	4800	37	16.0	7.1	38
1160	36	58	2.9	4.2	C302_0039 EZ505U	226	282	3.878	190/49	3200	2800	4800	15	16.0	7.1	31
1160	46	75	3.7	3.3	C302_0039 EZ703U	226	282	3.878	190/49	3200	2800	4800	24	16.0	7.1	33
1160	62	113	5.0	2.4	C302_0039 EZ705U	324	550	3.878	190/49	3200	2800	4800	37	16.0	7.1	38
1342	31	50	2.8	4.6	C302_0034 EZ505U	195	244	3.352	429/128	3200	2800	4800	16	16.0	7.1	31
1342	39	65	3.6	3.6	C302_0034 EZ703U	195	244	3.352	429/128	3200	2800	4800	25	16.0	7.1	33
1342	53	98	4.9	2.7	C302_0034 EZ705U	309	550	3.352	429/128	3200	2800	4800	37	16.0	7.1	38
1447	29	46	2.8	4.9	C302_0031 EZ505U	181	226	3.110	1045/336	3200	2800	4800	16	16.0	7.1	31
1447	37	60	3.6	3.8	C302_0031 EZ703U	181	226	3.110	1045/336	3200	2800	4800	25	16.0	7.1	33
1447	49	91	4.8	2.8	C302_0031 EZ705U	301	550	3.110	1045/336	3200	2800	4800	38	16.0	7.1	38
C3 (n_{1N} = 6000 min^{-1}, $M_{2acc,max}$ = 400 Nm)																
27	315	353	1.5	1.1	C303_2200 EZ302U	350	700	219.9	58045/264	3800	3500	6000	0.35	13.0	8.7	26
33	262	294	1.3	1.3	C303_1830 EZ302U	350	700	182.8	1645/9	3800	3500	6000	0.35	13.0	8.7	26
33	342	393	1.7	1.0	C303_1830 EZ303U	350	700	182.8	1645/9	3800	3500	6000	0.46	13.0	8.7	27
44	197	220	1.2	1.8	C303_1370 EZ302U	350	700	137.2	59267/432	3800	3500	6000	0.36	13.0	8.7	26
44	257	295	1.5	1.4	C303_1370 EZ303U	350	700	137.2	59267/432	3800	3500	6000	0.47	13.0	8.7	27
44	302	367	1.8	1.2	C303_1370 EZ401U	350	700	137.2	59267/432	3800	3500	6000	1.0	13.0	8.7	28
55	157	176	1.0	2.2	C303_1100 EZ302U	350	700	109.6	94705/864	3800	3500	6000	0.37	13.0	8.7	26
55	205	236	1.3	1.7	C303_1100 EZ303U	350	700	109.6	94705/864	3800	3500	6000	0.48	13.0	8.7	27
55	241	293	1.6	1.5	C303_1100 EZ401U	350	700	109.6	94705/864	3800	3500	6000	1.0	13.0	8.7	28
65	132	148	1.0	2.5	C303_0920 EZ302U	350	590	91.93	39715/432	3800	3500	6000	0.38	13.0	8.7	26
65	172	198	1.3	1.9	C303_0920 EZ303U	350	590	91.93	39715/432	3800	3500	6000	0.49	13.0	8.7	27
65	202	246	1.5	1.7	C303_0920 EZ401U	350	590	91.93	39715/432	3800	3500	6000	1.0	13.0	8.7	28
66	295	382	2.1	1.2	C303_0910 EZ501U	350	700	90.76	4901/54	3800	3500	6000	3.1	13.0	8.7	29
74	117	131	1.0	2.5	C303_0810 EZ302U	389	522	81.47	1222/15	3800	3500	6000	0.38	13.0	8.7	26
74	153	175	1.4	1.9	C303_0810 EZ303U	400	522	81.47	1222/15	3800	3500	6000	0.49	13.0	8.7	27
74	179	218	1.6	1.7	C303_0810 EZ401U	400	522	81.47	1222/15	3800	3500	6000	1.0	13.0	8.7	28
75	261	338	2.0	1.3	C303_0800 EZ501U	400	700	80.43	6032/75	3800	3500	6000	3.1	13.0	8.7	29
86	230	298	1.9	1.5	C302_0700 EZ501U	350	700	69.88	559/8	3800	3500	6000	3.0	13.0	8.7	25
97	204	264	1.9	1.6	C302_0620 EZ501U	397	662	61.92	1548/25	3800	3500	6000	3.0	13.0	8.7	25
97	312	468	2.9	1.1	C302_0620 EZ502U	397	662	61.92	1548/25	3800	3500	6000	5.3	13.0	8.7	27
97	312	474	2.9	1.1	C302_0620 EZ701U	397	662	61.92	1548/25	3800	3500	6000	8.6	13.0	8.7	28
107	185	240	1.7	1.9	C302_0560 EZ501U	350	700	56.14	1235/22	3800	3500	6000	3.1	13.0	8.7	25

n_{2N} [rpm]	M_{2N} [Nm]	$M_{2,0}$ [Nm]	a_{th}	S	Type	M_{2acc} [Nm]	M_{2NOT} [Nm]	i	i_{exakt}	n_{1maxDB} EL1,2,3,4 [rpm]	n_{1maxDB} EL5,6 [rpm]	n_{1maxZB} [rpm]	J_1 [kgcm²]	$\Delta\varphi_2$ [arcmin]	C_2 [Nm/arcmin]	m [kg]
C3 (n_{1N} = 6000 min^{-1}, $M_{2acc,max}$ = 400 Nm)																
107	283	425	2.6	1.2	C302_0560 EZ502U	350	700	56.14	1235/22	3800	3500	6000	5.4	13.0	8.7	27
107	283	430	2.6	1.2	C302_0560 EZ701U	350	700	56.14	1235/22	3800	3500	6000	8.7	13.0	8.7	28
107	338	577	3.1	1.0	C302_0560 EZ503U	350	700	56.14	1235/22	3800	3500	6000	7.8	13.0	8.7	28
121	164	212	1.6	2.1	C302_0500 EZ501U	400	700	49.75	2736/55	3800	3500	6000	3.1	13.0	8.7	25
121	251	376	2.4	1.4	C302_0500 EZ502U	400	700	49.75	2736/55	3800	3500	6000	5.4	13.0	8.7	27
121	251	381	2.4	1.4	C302_0500 EZ701U	400	700	49.75	2736/55	3800	3500	6000	8.7	13.0	8.7	28
121	299	511	2.9	1.2	C302_0500 EZ503U	400	700	49.75	2736/55	3800	3500	6000	7.8	13.0	8.7	28
129	154	199	1.5	2.3	C302_0470 EZ501U	350	700	46.67	140/3	3800	3500	6000	3.1	13.0	8.7	25
129	235	353	2.4	1.5	C302_0470 EZ502U	350	700	46.67	140/3	3800	3500	6000	5.4	13.0	8.7	27
129	235	358	2.4	1.5	C302_0470 EZ701U	350	700	46.67	140/3	3800	3500	6000	8.7	13.0	8.7	28
129	281	480	2.8	1.2	C302_0470 EZ503U	350	700	46.67	140/3	3800	3500	6000	7.8	13.0	8.7	28
145	136	176	1.5	2.6	C302_0410 EZ501U	400	700	41.35	2688/65	3800	3500	6000	3.1	13.0	8.7	25
145	209	313	2.2	1.7	C302_0410 EZ502U	400	700	41.35	2688/65	3800	3500	6000	5.4	13.0	8.7	27
145	209	317	2.2	1.7	C302_0410 EZ701U	400	700	41.35	2688/65	3800	3500	6000	8.7	13.0	8.7	28
145	249	425	2.7	1.4	C302_0410 EZ503U	400	700	41.35	2688/65	3800	3500	6000	7.8	13.0	8.7	28
171	116	150	1.4	3.0	C302_0350 EZ501U	350	700	35.03	1261/36	3800	3500	6000	3.3	13.0	8.7	25
171	177	265	2.1	1.9	C302_0350 EZ502U	350	700	35.03	1261/36	3800	3500	6000	5.6	13.0	8.7	27
171	177	268	2.1	1.9	C302_0350 EZ701U	350	700	35.03	1261/36	3800	3500	6000	8.9	13.0	8.7	28
171	211	360	2.5	1.6	C302_0350 EZ503U	350	700	35.03	1261/36	3800	3500	6000	8.0	13.0	8.7	28
171	245	486	2.9	1.4	C302_0350 EZ702U	350	700	35.03	1261/36	3800	3500	6000	14	13.0	8.7	31
193	102	132	1.3	3.2	C302_0310 EZ501U	400	700	31.04	776/25	3800	3500	6000	3.3	13.0	8.7	25
193	157	235	2.1	2.1	C302_0310 EZ502U	400	700	31.04	776/25	3800	3500	6000	5.6	13.0	8.7	27
193	157	238	2.1	2.1	C302_0310 EZ701U	400	700	31.04	776/25	3800	3500	6000	8.9	13.0	8.7	28
193	187	319	2.4	1.8	C302_0310 EZ503U	400	700	31.04	776/25	3800	3500	6000	8.0	13.0	8.7	28
193	217	431	2.8	1.5	C302_0310 EZ702U	400	700	31.04	776/25	3800	3500	6000	14	13.0	8.7	31
214	92	119	1.3	3.4	C302_0280 EZ501U	350	700	27.99	2015/72	3800	3500	6000	3.4	13.0	8.7	25
214	141	212	2.0	2.2	C302_0280 EZ502U	350	700	27.99	2015/72	3800	3500	6000	5.7	13.0	8.7	27
214	141	214	2.0	2.2	C302_0280 EZ701U	350	700	27.99	2015/72	3800	3500	6000	9.0	13.0	8.7	28
214	168	288	2.4	1.9	C302_0280 EZ503U	350	700	27.99	2015/72	3800	3500	6000	8.1	13.0	8.7	28
214	195	388	2.8	1.6	C302_0280 EZ702U	350	700	27.99	2015/72	3800	3500	6000	14	13.0	8.7	31
242	82	106	1.3	3.7	C302_0250 EZ501U	385	666	24.80	124/5	3800	3500	6000	3.4	13.0	8.7	25
242	125	188	2.0	2.4	C302_0250 EZ502U	400	666	24.80	124/5	3800	3500	6000	5.7	13.0	8.7	27
242	125	190	2.0	2.4	C302_0250 EZ701U	400	700	24.80	124/5	3800	3500	6000	9.0	13.0	8.7	28
242	149	255	2.4	2.0	C302_0250 EZ503U	400	666	24.80	124/5	3800	3500	6000	8.1	13.0	8.7	28
242	173	344	2.7	1.8	C302_0250 EZ702U	400	700	24.80	124/5	3800	3500	6000	14	13.0	8.7	31
256	77	100	1.3	3.9	C302_0230 EZ501U	350	683	23.47	845/36	3800	3500	6000	3.6	13.0	8.7	25
256	118	178	2.0	2.5	C302_0230 EZ502U	350	683	23.47	845/36	3800	3500	6000	5.9	13.0	8.7	27
256	118	180	2.0	2.5	C302_0230 EZ701U	350	700	23.47	845/36	3800	3500	6000	9.2	13.0	8.7	28
256	141	241	2.3	2.1	C302_0230 EZ503U	350	683	23.47	845/36	3800	3500	6000	8.3	13.0	8.7	28
256	164	326	2.7	1.8	C302_0230 EZ702U	350	700	23.47	845/36	3800	3500	6000	14	13.0	8.7	31
288	69	89	1.3	4.2	C302_0210 EZ501U	323	605	20.80	104/5	3800	3500	6000	3.6	13.0	8.7	25
288	105	157	1.9	2.7	C302_0210 EZ502U	400	605	20.80	104/5	3800	3500	6000	5.9	13.0	8.7	27
288	105	159	1.9	2.7	C302_0210 EZ701U	400	700	20.80	104/5	3800	3500	6000	9.2	13.0	8.7	28
288	125	214	2.3	2.3	C302_0210 EZ503U	400	605	20.80	104/5	3800	3500	6000	8.3	13.0	8.7	28
288	145	289	2.7	2.0	C302_0210 EZ702U	400	700	20.80	104/5	3800	3500	6000	14	13.0	8.7	31
765	40	59	2.0	4.4	C302_0078 EZ502U	183	228	7.841	494/63	3800	3500	6000	6.1	16.0	7.1	27
765	40	60	2.0	4.4	C302_0078 EZ701U	152	469	7.841	494/63	3800	3500	6000	9.4	16.0	7.1	28
765	47	81	2.3	3.6	C302_0078 EZ503U	183	228	7.841	494/63	3800	3500	6000	8.5	16.0	7.1	28
765	55	109	2.7	3.1	C302_0078 EZ702U	312	469	7.841	494/63	3800	3500	6000	15	16.0	7.1	31
C4 (n_{1N} = 2000 min^{-1}, $M_{2acc,max}$ = 600 Nm)																
143	529	594	6.7	1.0	C402_0140 EZ813U	550	1100	13.99	2015/144	3300	2800	5000	108	12.0	22	66
160	473	531	6.3	1.2	C402_0125 EZ813U	600	1100	12.52	651/52	3300	2800	5000	108	12.0	22	66
172	440	494	6.1	1.3	C402_0115 EZ813U	550	1100	11.64	1885/162	2900	2500	4500	109	12.0	22	66
192	394	442	5.8	1.4	C402_0105 EZ813U	600	1100	10.41	406/39	2900	2500	4500	109	12.0	22	66
216	350	393	5.6	1.5	C402_0093 EZ813U	550	1100	9.261	3445/372	2900	2500	4500	110	12.0	22	66
216	519	618	8.3	1.0	C402_0093 EZ815U	550	1100	9.261	3445/372	2900	2500	4500	173	12.0	22	79
241	313	351	5.5	1.6	C402_0083 EZ813U	600	1100	8.285	3339/403	2900	2500	4500	110	12.0	22	66
241	464	553	8.2	1.1	C402_0083 EZ815U	600	1100	8.285	3339/403	2900	2500	4500	173	12.0	22	79
256	296	332	7.6	1.2	C402_0078 EZ813U	550	850	7.816	2001/256	3500	3200	5500	107	15.0	17	66
340	223	250	7.3	1.5	C402_0059 EZ813U	542	850	5.891	377/64	3300	2800	5000	108	15.0	17	66
427	177	199	7.0	1.7	C402_0047 EZ813U	502	800	4.682	899/192	3300	2800	5000	109	15.0	17	66
427	262	312	10	1.2	C402_0047 EZ815U	502	800	4.682	899/192	3300	2800	5000	172	15.0	17	79
514	147	165	6.8	1.9	C402_0039 EZ813U	472	713	3.894	841/216	2900	2500	4500	110	15.0	17	66
514	218	260	10	1.3	C402_0039 EZ815U	472	713	3.894	841/216	2900	2500	4500	173	15.0	17	79

n_{2N} [rpm]	M_{2N} [Nm]	$M_{2,0}$ [Nm]	a_{th}	S	Type	M_{2acc} [Nm]	M_{2NOT} [Nm]	i	i_{exakt}	n_{1maxDB} EL1,2,3,4 [rpm]	n_{1maxDB} EL5,6 [rpm]	n_{1maxZB} [rpm]	J_1 [kgcm²]	$\Delta\varphi_2$ [arcmin]	C_2 [Nm/arcmin]	m [kg]
C4 (n_{1N} = 2000 min^{-1}, $M_{2acc,max}$ = 600 Nm)																
645	117	131	6.5	2.3	C402_0031 EZ813U	421	599	3.099	1537/496	2900	2500	4500	113	15.0	17	66
645	174	207	9.7	1.5	C402_0031 EZ815U	437	599	3.099	1537/496	2900	2500	4500	176	15.0	17	79
814	93	104	6.3	2.6	C402_0025 EZ813U	334	477	2.456	609/248	2500	2100	3500	117	15.0	17	66
814	138	164	9.3	1.8	C402_0025 EZ815U	381	477	2.456	609/248	2500	2100	3500	180	15.0	17	79
1016	74	83	6.1	3.1	C402_0020 EZ813U	267	382	1.968	551/280	2500	2100	3500	121	15.0	17	66
1016	110	131	9.0	2.1	C402_0020 EZ815U	306	382	1.968	551/280	2500	2100	3500	185	15.0	17	79
C4 (n_{1N} = 3000 min^{-1}, $M_{2acc,max}$ = 600 Nm)																
28	443	484	2.0	1.2	C403_1080 EZ501U	550	1100	107.7	754/7	3500	3200	5500	3.2	12.0	22	40
33	371	406	1.8	1.5	C403_0900 EZ501U	550	1100	90.32	8671/96	3500	3200	5500	3.2	12.0	22	40
37	332	363	1.7	1.7	C403_0810 EZ501U	600	1100	80.81	42021/520	3500	3200	5500	3.2	12.0	22	40
43	291	319	1.6	1.9	C402_0700 EZ501U	550	1022	69.88	559/8	3500	3200	5500	3.2	12.0	22	35
43	502	542	2.8	1.1	C402_0700 EZ502U	550	1022	69.88	559/8	3500	3200	5500	5.5	12.0	22	37
43	502	563	2.8	1.1	C402_0700 EZ701U	550	1022	69.88	559/8	3500	3200	5500	8.8	12.0	22	39
48	261	285	1.7	1.9	C402_0630 EZ501U	600	914	62.52	8127/130	3500	3200	5500	3.2	12.0	22	35
48	449	485	2.9	1.1	C402_0630 EZ502U	600	914	62.52	8127/130	3500	3200	5500	5.5	12.0	22	37
48	449	503	2.9	1.1	C402_0630 EZ701U	600	914	62.52	8127/130	3500	3200	5500	8.8	12.0	22	39
53	234	256	1.5	2.4	C402_0560 EZ501U	550	1025	56.10	9425/168	3500	3200	5500	3.3	12.0	22	35
53	403	435	2.5	1.4	C402_0560 EZ502U	550	1025	56.10	9425/168	3500	3200	5500	5.6	12.0	22	37
53	403	452	2.5	1.4	C402_0560 EZ701U	550	1025	56.10	9425/168	3500	3200	5500	8.9	12.0	22	39
53	528	604	3.3	1.0	C402_0560 EZ503U	550	1025	56.10	9425/168	3500	3200	5500	8.0	12.0	22	38
60	209	229	1.4	2.6	C402_0500 EZ501U	600	917	50.19	1305/26	3500	3200	5500	3.3	12.0	22	35
60	360	389	2.4	1.5	C402_0500 EZ502U	600	917	50.19	1305/26	3500	3200	5500	5.6	12.0	22	37
60	360	404	2.4	1.5	C402_0500 EZ701U	600	917	50.19	1305/26	3500	3200	5500	8.9	12.0	22	39
60	472	540	3.2	1.2	C402_0500 EZ503U	600	917	50.19	1305/26	3500	3200	5500	8.0	12.0	22	38
64	195	213	1.3	2.8	C402_0470 EZ501U	550	934	46.67	140/3	3500	3200	5500	3.4	12.0	22	35
64	335	362	2.3	1.6	C402_0470 EZ502U	550	934	46.67	140/3	3500	3200	5500	5.7	12.0	22	37
64	335	376	2.3	1.6	C402_0470 EZ701U	550	1100	46.67	140/3	3500	3200	5500	9.0	12.0	22	39
64	439	502	3.0	1.3	C402_0470 EZ503U	550	934	46.67	140/3	3500	3200	5500	8.1	12.0	22	38
64	543	652	3.8	1.0	C402_0470 EZ702U	550	1100	46.67	140/3	3500	3200	5500	14	12.0	22	41
72	174	190	1.3	3.2	C402_0420 EZ501U	600	835	41.75	7056/169	3500	3200	5500	3.5	12.0	22	35
72	300	324	2.2	1.8	C402_0420 EZ502U	600	835	41.75	7056/169	3500	3200	5500	5.8	12.0	22	37
72	300	336	2.2	1.8	C402_0420 EZ701U	600	1100	41.75	7056/169	3500	3200	5500	9.1	12.0	22	39
72	393	450	2.9	1.4	C402_0420 EZ503U	600	835	41.75	7056/169	3500	3200	5500	8.1	12.0	22	38
72	486	583	3.6	1.1	C402_0420 EZ702U	600	1100	41.75	7056/169	3500	3200	5500	14	12.0	22	41
72	547	648	4.0	1.0	C402_0420 EZ505U	600	1100	41.75	7056/169	3500	3200	5500	13	12.0	22	41
86	145	159	1.2	3.8	C402_0350 EZ501U	540	794	34.82	975/28	3500	3200	5500	3.8	12.0	22	35
86	250	270	2.0	2.2	C402_0350 EZ502U	550	794	34.82	975/28	3500	3200	5500	6.1	12.0	22	37
86	250	280	2.0	2.2	C402_0350 EZ701U	550	1100	34.82	975/28	3500	3200	5500	9.4	12.0	22	39
86	328	375	2.6	1.7	C402_0350 EZ503U	550	794	34.82	975/28	3500	3200	5500	8.5	12.0	22	38
86	405	486	3.2	1.4	C402_0350 EZ702U	550	1100	34.82	975/28	3500	3200	5500	15	12.0	22	41
86	456	540	3.7	1.2	C402_0350 EZ505U	550	1100	34.82	975/28	3500	3200	5500	13	12.0	22	41
96	130	142	1.1	4.2	C402_0310 EZ501U	484	711	31.15	405/13	3500	3200	5500	3.8	12.0	22	35
96	224	242	1.9	2.5	C402_0310 EZ502U	568	711	31.15	405/13	3500	3200	5500	6.1	12.0	22	37
96	224	251	1.9	2.5	C402_0310 EZ701U	600	1100	31.15	405/13	3500	3200	5500	9.4	12.0	22	39
96	293	335	2.5	1.9	C402_0310 EZ503U	568	711	31.15	405/13	3500	3200	5500	8.5	12.0	22	38
96	363	435	3.1	1.5	C402_0310 EZ702U	600	1100	31.15	405/13	3500	3200	5500	15	12.0	22	41
96	408	484	3.5	1.3	C402_0310 EZ505U	600	1100	31.15	405/13	3500	3200	5500	13	12.0	22	41
96	499	629	4.2	1.1	C402_0310 EZ703U	600	1100	31.15	405/13	3500	3200	5500	23	12.0	22	43
108	200	224	1.8	2.8	C402_0280 EZ701U	540	1100	27.86	195/7	3500	3200	5500	9.8	12.0	22	39
108	324	389	2.9	1.7	C402_0280 EZ702U	550	1100	27.86	195/7	3500	3200	5500	15	12.0	22	41
108	365	432	3.3	1.5	C402_0280 EZ505U	550	1100	27.86	195/7	3500	3200	5500	13	12.0	22	41
108	446	562	4.0	1.2	C402_0280 EZ703U	550	1100	27.86	195/7	3500	3200	5500	23	12.0	22	43
120	179	201	1.7	3.1	C402_0250 EZ701U	484	1100	24.92	324/13	3500	3200	5500	9.8	12.0	22	39
120	290	348	2.7	1.9	C402_0250 EZ702U	600	1100	24.92	324/13	3500	3200	5500	15	12.0	22	41
120	326	387	3.1	1.7	C402_0250 EZ505U	600	1100	24.92	324/13	3500	3200	5500	13	12.0	22	41
120	399	503	3.8	1.4	C402_0250 EZ703U	600	1100	24.92	324/13	3500	3200	5500	23	12.0	22	43
128	168	188	1.6	3.3	C402_0230 EZ701U	453	1100	23.36	1495/64	3500	3200	5500	10	12.0	22	39
128	272	326	2.7	2.0	C402_0230 EZ702U	550	1100	23.36	1495/64	3500	3200	5500	15	12.0	22	41
128	306	363	3.0	1.8	C402_0230 EZ505U	550	1100	23.36	1495/64	3500	3200	5500	14	12.0	22	41
128	374	471	3.7	1.5	C402_0230 EZ703U	550	1100	23.36	1495/64	3500	3200	5500	23	12.0	22	43
128	483	684	4.7	1.1	C402_0230 EZ705U	550	1100	23.36	1495/64	3500	3200	5500	36	12.0	22	49
144	150	168	1.6	3.7	C402_0210 EZ701U	405	1100	20.90	4347/208	3500	3200	5500	10	12.0	22	39
144	243	292	2.5	2.3	C402_0210 EZ702U	600	1100	20.90	4347/208	3500	3200	5500	15	12.0	22	41
144	274	324	2.8	2.0	C402_0210 EZ505U	600	1100	20.90	4347/208	3500	3200	5500	14	12.0	22	41

n_{2N} [rpm]	M_{2N} [Nm]	$M_{2,0}$ [Nm]	a_{th}	S	Type	M_{2acc} [Nm]	M_{2NOT} [Nm]	i	i_{exakt}	n_{1maxDB} EL1,2,3,4 [rpm]	n_{1maxDB} EL5,6 [rpm]	n_{1maxZB} [rpm]	J_1 [kgcm²]	$\Delta\varphi_2$ [arcmin]	C_2 [Nm/arcmin]	m [kg]
C4 (n_{1N} = 3000 min^{-1}, $M_{2acc,max}$ = 600 Nm)																
144	334	422	3.5	1.6	C402_0210 EZ703U	600	1100	20.90	4347/208	3500	3200	5500	23	12.0	22	43
144	432	612	4.5	1.3	C402_0210 EZ705U	600	1100	20.90	4347/208	3500	3200	5500	36	12.0	22	49
170	126	142	1.4	4.4	C402_0175 EZ701U	342	1100	17.60	845/48	3300	2800	5000	11	12.0	22	39
170	205	246	2.3	2.7	C402_0175 EZ702U	550	1100	17.60	845/48	3300	2800	5000	16	12.0	22	41
170	231	273	2.6	2.4	C402_0175 EZ505U	550	1100	17.60	845/48	3300	2800	5000	15	12.0	22	41
170	282	355	3.2	2.0	C402_0175 EZ703U	550	1100	17.60	845/48	3300	2800	5000	24	12.0	22	43
170	364	516	4.1	1.5	C402_0175 EZ705U	550	1100	17.60	845/48	3300	2800	5000	36	12.0	22	49
190	113	127	1.3	4.9	C402_0160 EZ701U	306	1065	15.75	63/4	3300	2800	5000	11	12.0	22	39
190	183	220	2.2	3.0	C402_0160 EZ702U	600	1065	15.75	63/4	3300	2800	5000	16	12.0	22	41
190	206	244	2.5	2.7	C402_0160 EZ505U	600	1065	15.75	63/4	3300	2800	5000	15	12.0	22	41
190	252	318	3.0	2.2	C402_0160 EZ703U	600	1065	15.75	63/4	3300	2800	5000	24	12.0	22	43
190	325	461	3.9	1.7	C402_0160 EZ705U	600	1100	15.75	63/4	3300	2800	5000	37	12.0	22	49
214	163	195	2.1	3.3	C402_0140 EZ702U	550	1018	13.99	2015/144	3300	2800	5000	17	12.0	22	41
214	183	217	2.4	2.9	C402_0140 EZ505U	550	1018	13.99	2015/144	3300	2800	5000	16	12.0	22	41
214	224	282	2.9	2.4	C402_0140 EZ703U	550	1018	13.99	2015/144	3300	2800	5000	25	12.0	22	43
214	289	410	3.8	1.8	C402_0140 EZ705U	550	1100	13.99	2015/144	3300	2800	5000	37	12.0	22	49
240	146	175	2.1	3.5	C402_0125 EZ702U	498	911	12.52	651/52	3300	2800	5000	17	12.0	22	41
240	164	194	2.3	3.1	C402_0125 EZ505U	600	911	12.52	651/52	3300	2800	5000	16	12.0	22	41
240	200	253	2.9	2.6	C402_0125 EZ703U	600	911	12.52	651/52	3300	2800	5000	25	12.0	22	43
240	259	367	3.7	2.0	C402_0125 EZ705U	600	1100	12.52	651/52	3300	2800	5000	37	12.0	22	49
258	135	163	2.1	3.7	C402_0115 EZ702U	463	847	11.64	1885/162	2900	2500	4500	18	12.0	22	41
258	152	181	2.3	3.3	C402_0115 EZ505U	550	847	11.64	1885/162	2900	2500	4500	16	12.0	22	41
258	186	235	2.8	2.7	C402_0115 EZ703U	550	847	11.64	1885/162	2900	2500	4500	26	12.0	22	43
258	240	341	3.7	2.1	C402_0115 EZ705U	550	1100	11.64	1885/162	2900	2500	4500	38	12.0	22	49
288	121	145	2.0	4.0	C402_0105 EZ702U	414	757	10.41	406/39	2900	2500	4500	18	12.0	22	41
288	136	162	2.3	3.5	C402_0105 EZ505U	600	757	10.41	406/39	2900	2500	4500	17	12.0	22	41
288	167	210	2.8	2.9	C402_0105 EZ703U	600	757	10.41	406/39	2900	2500	4500	26	12.0	22	43
288	215	305	3.6	2.2	C402_0105 EZ705U	600	1100	10.41	406/39	2900	2500	4500	38	12.0	22	49
324	191	271	3.5	2.4	C402_0093 EZ705U	550	1100	9.261	3445/372	2900	2500	4500	40	12.0	22	49
362	171	243	3.5	2.6	C402_0083 EZ705U	600	1100	8.285	3339/403	2900	2500	4500	40	12.0	22	49
384	91	109	2.7	3.5	C402_0078 EZ702U	311	450	7.816	2001/256	3500	3200	5500	16	15.0	17	41
384	102	121	3.0	3.1	C402_0078 EZ505U	360	450	7.816	2001/256	3500	3200	5500	14	15.0	17	41
384	125	158	3.7	2.5	C402_0078 EZ703U	360	450	7.816	2001/256	3500	3200	5500	24	15.0	17	43
384	161	229	4.8	2.0	C402_0078 EZ705U	550	850	7.816	2001/256	3500	3200	5500	36	15.0	17	49
509	69	82	2.6	4.2	C402_0059 EZ702U	234	399	5.891	377/64	3300	2800	5000	17	15.0	17	41
509	77	91	2.9	3.7	C402_0059 EZ505U	319	399	5.891	377/64	3300	2800	5000	15	15.0	17	41
509	94	119	3.5	3.0	C402_0059 EZ703U	319	399	5.891	377/64	3300	2800	5000	25	15.0	17	43
509	122	173	4.5	2.4	C402_0059 EZ705U	542	850	5.891	377/64	3300	2800	5000	37	15.0	17	49
641	54	65	2.5	4.9	C402_0047 EZ702U	186	341	4.682	899/192	3300	2800	5000	18	15.0	17	41
641	61	73	2.8	4.3	C402_0047 EZ505U	273	341	4.682	899/192	3300	2800	5000	17	15.0	17	41
641	75	94	3.4	3.5	C402_0047 EZ703U	273	341	4.682	899/192	3300	2800	5000	26	15.0	17	43
641	97	137	4.4	2.7	C402_0047 EZ705U	472	800	4.682	899/192	3300	2800	5000	39	15.0	17	49
770	51	60	3.0	4.4	C402_0039 EZ505U	227	283	3.894	841/216	2900	2500	4500	18	15.0	17	41
770	62	79	3.6	3.6	C402_0039 EZ703U	227	283	3.894	841/216	2900	2500	4500	28	15.0	17	43
770	80	114	4.2	3.1	C402_0039 EZ705U	393	713	3.894	841/216	2900	2500	4500	40	15.0	17	49
968	64	91	4.1	3.6	C402_0031 EZ705U	313	599	3.099	1537/496	2900	2500	4500	42	15.0	17	49
1221	51	72	3.9	4.2	C402_0025 EZ705U	248	477	2.456	609/248	2500	2100	3500	46	15.0	17	49
1524	41	58	3.8	4.9	C402_0020 EZ705U	199	382	1.968	551/280	2500	2100	3500	51	15.0	17	49
C4 (n_{1N} = 4000 min^{-1}, $M_{2acc,max}$ = 600 Nm)																
191	511	886	5.3	1.1	C402_0210 EZ813U	600	1100	20.90	4347/208	3500	3200	5500	106	12.0	22	66
191	529	1361	5.5	1.0	C402_0210 EZ815U	600	1100	20.90	4347/208	3500	3200	5500	169	12.0	22	79
227	430	746	5.1	1.2	C402_0175 EZ813U	550	1100	17.60	845/48	3300	2800	5000	107	12.0	22	66
227	446	1146	5.3	1.2	C402_0175 EZ815U	550	1100	17.60	845/48	3300	2800	5000	170	12.0	22	79
254	385	668	5.0	1.3	C402_0160 EZ813U	600	1100	15.75	63/4	3300	2800	5000	107	12.0	22	66
254	399	1026	5.2	1.3	C402_0160 EZ815U	600	1100	15.75	63/4	3300	2800	5000	170	12.0	22	79
286	342	593	4.9	1.4	C402_0140 EZ813U	550	1100	13.99	2015/144	3300	2800	5000	108	12.0	22	66
286	354	911	5.1	1.4	C402_0140 EZ815U	550	1100	13.99	2015/144	3300	2800	5000	171	12.0	22	79
320	306	531	4.8	1.5	C402_0125 EZ813U	600	1100	12.52	651/52	3300	2800	5000	108	12.0	22	66
320	317	815	5.0	1.5	C402_0125 EZ815U	600	1100	12.52	651/52	3300	2800	5000	171	12.0	22	79
344	284	493	4.8	1.6	C402_0115 EZ813U	550	1100	11.64	1885/162	2900	2500	4500	109	12.0	22	66
344	295	758	4.9	1.5	C402_0115 EZ815U	550	1100	11.64	1885/162	2900	2500	4500	172	12.0	22	79
384	254	441	4.7	1.7	C402_0105 EZ813U	600	1100	10.41	406/39	2900	2500	4500	109	12.0	22	66
384	264	678	4.8	1.7	C402_0105 EZ815U	600	1100	10.41	406/39	2900	2500	4500	172	12.0	22	79
432	226	393	4.6	1.9	C402_0093 EZ813U	550	1100	9.261	3445/372	2900	2500	4500	110	12.0	22	66

n_{2N} [rpm]	M_{2N} [Nm]	$M_{2,0}$ [Nm]	a_{th}	S	Type	M_{2acc} [Nm]	M_{2NOT} [Nm]	i	i_{exakt}	n_{1maxDB} EL1,2,3,4 [rpm]	n_{1maxDB} EL5,6 [rpm]	n_{1maxZB} [rpm]	J_1 [kgcm²]	$\Delta\varphi_2$ [arcmin]	C_2 [Nm/ arcmin]	m [kg]
C4 (n_{1N} = 4000 min^{-1}, $M_{2acc,max}$ = 600 Nm)																
432	235	603	4.8	1.8	C402_0093 EZ815U	550	1100	9.261	3445/372	2900	2500	4500	173	12.0	22	79
483	203	351	4.5	2.0	C402_0083 EZ813U	600	1100	8.285	3339/403	2900	2500	4500	110	12.0	22	66
483	210	540	4.7	1.9	C402_0083 EZ815U	600	1100	8.285	3339/403	2900	2500	4500	173	12.0	22	79
512	191	331	6.2	1.5	C402_0078 EZ813U	550	850	7.816	2001/256	3500	3200	5500	107	15.0	17	66
512	198	509	6.4	1.4	C402_0078 EZ815U	550	850	7.816	2001/256	3500	3200	5500	170	15.0	17	79
679	144	250	5.9	1.8	C402_0059 EZ813U	542	850	5.891	377/64	3300	2800	5000	108	15.0	17	66
679	149	384	6.1	1.7	C402_0059 EZ815U	542	850	5.891	377/64	3300	2800	5000	171	15.0	17	79
854	114	198	5.7	2.1	C402_0047 EZ813U	502	800	4.682	899/192	3300	2800	5000	109	15.0	17	66
854	119	305	5.9	2.0	C402_0047 EZ815U	502	800	4.682	899/192	3300	2800	5000	172	15.0	17	79
1027	95	165	5.5	2.4	C402_0039 EZ813U	472	713	3.894	841/216	2900	2500	4500	110	15.0	17	66
1027	99	254	5.7	2.3	C402_0039 EZ815U	472	713	3.894	841/216	2900	2500	4500	173	15.0	17	79
1291	76	131	5.3	2.8	C402_0031 EZ813U	421	599	3.099	1537/496	2900	2500	4500	113	15.0	17	66
1291	78	202	5.5	2.7	C402_0031 EZ815U	437	599	3.099	1537/496	2900	2500	4500	176	15.0	17	79
C4 (n_{1N} = 4500 min^{-1}, $M_{2acc,max}$ = 600 Nm)																
96	430	693	3.0	1.3	C402_0470 EZ505U	550	1100	46.67	140/3	3500	3200	5500	13	12.0	22	41
96	548	905	3.8	1.0	C402_0470 EZ703U	550	1100	46.67	140/3	3500	3200	5500	22	12.0	22	43
108	385	620	2.8	1.4	C402_0420 EZ505U	600	1100	41.75	7056/169	3500	3200	5500	13	12.0	22	41
108	490	810	3.6	1.1	C402_0420 EZ703U	600	1100	41.75	7056/169	3500	3200	5500	22	12.0	22	43
129	321	517	2.6	1.7	C402_0350 EZ505U	550	1100	34.82	975/28	3500	3200	5500	13	12.0	22	41
129	409	676	3.3	1.3	C402_0350 EZ703U	550	1100	34.82	975/28	3500	3200	5500	23	12.0	22	43
144	287	462	2.4	1.9	C402_0310 EZ505U	600	1100	31.15	405/13	3500	3200	5500	13	12.0	22	41
144	366	604	3.1	1.5	C402_0310 EZ703U	600	1100	31.15	405/13	3500	3200	5500	23	12.0	22	43
162	257	413	2.3	2.1	C402_0280 EZ505U	550	1100	27.86	195/7	3500	3200	5500	13	12.0	22	41
162	327	540	2.9	1.7	C402_0280 EZ703U	550	1100	27.86	195/7	3500	3200	5500	23	12.0	22	43
181	230	370	2.2	2.4	C402_0250 EZ505U	600	1100	24.92	324/13	3500	3200	5500	13	12.0	22	41
181	293	484	2.8	1.9	C402_0250 EZ703U	600	1100	24.92	324/13	3500	3200	5500	23	12.0	22	43
193	215	347	2.1	2.6	C402_0230 EZ505U	550	1100	23.36	1495/64	3500	3200	5500	14	12.0	22	41
193	274	453	2.7	2.0	C402_0230 EZ703U	550	1100	23.36	1495/64	3500	3200	5500	23	12.0	22	43
193	372	680	3.6	1.5	C402_0230 EZ705U	550	1100	23.36	1495/64	3500	3200	5500	36	12.0	22	49
215	193	310	2.1	2.8	C402_0210 EZ505U	600	1100	20.90	4347/208	3500	3200	5500	14	12.0	22	41
215	245	405	2.6	2.2	C402_0210 EZ703U	600	1100	20.90	4347/208	3500	3200	5500	23	12.0	22	43
215	332	608	3.6	1.6	C402_0210 EZ705U	600	1100	20.90	4347/208	3500	3200	5500	36	12.0	22	49
256	162	261	2.0	3.1	C402_0175 EZ505U	550	1100	17.60	845/48	3300	2800	5000	15	12.0	22	41
256	207	342	2.5	2.4	C402_0175 EZ703U	550	1100	17.60	845/48	3300	2800	5000	24	12.0	22	43
256	280	512	3.5	1.8	C402_0175 EZ705U	550	1100	17.60	845/48	3300	2800	5000	36	12.0	22	49
286	145	234	2.0	3.3	C402_0160 EZ505U	600	1065	15.75	63/4	3300	2800	5000	15	12.0	22	41
286	185	306	2.5	2.6	C402_0160 EZ703U	600	1065	15.75	63/4	3300	2800	5000	24	12.0	22	43
286	251	458	3.4	1.9	C402_0160 EZ705U	600	1100	15.75	63/4	3300	2800	5000	37	12.0	22	49
322	129	208	1.9	3.6	C402_0140 EZ505U	550	1018	13.99	2015/144	3300	2800	5000	16	12.0	22	41
322	164	271	2.5	2.8	C402_0140 EZ703U	550	1018	13.99	2015/144	3300	2800	5000	25	12.0	22	43
322	223	407	3.3	2.1	C402_0140 EZ705U	550	1100	13.99	2015/144	3300	2800	5000	37	12.0	22	49
359	115	186	1.9	3.9	C402_0125 EZ505U	600	911	12.52	651/52	3300	2800	5000	16	12.0	22	41
359	147	243	2.4	3.1	C402_0125 EZ703U	600	911	12.52	651/52	3300	2800	5000	25	12.0	22	43
359	199	364	3.3	2.3	C402_0125 EZ705U	600	1100	12.52	651/52	3300	2800	5000	37	12.0	22	49
387	107	173	1.9	4.1	C402_0115 EZ505U	550	847	11.64	1885/162	2900	2500	4500	16	12.0	22	41
387	137	226	2.4	3.2	C402_0115 EZ703U	550	847	11.64	1885/162	2900	2500	4500	26	12.0	22	43
387	185	339	3.2	2.4	C402_0115 EZ705U	550	1100	11.64	1885/162	2900	2500	4500	38	12.0	22	49
432	96	154	1.8	4.4	C402_0105 EZ505U	600	757	10.41	406/39	2900	2500	4500	17	12.0	22	41
432	122	202	2.3	3.5	C402_0105 EZ703U	600	757	10.41	406/39	2900	2500	4500	26	12.0	22	43
432	166	303	3.2	2.5	C402_0105 EZ705U	600	1100	10.41	406/39	2900	2500	4500	38	12.0	22	49
486	147	269	3.1	2.8	C402_0093 EZ705U	550	1100	9.261	3445/372	2900	2500	4500	40	12.0	22	49
543	132	241	3.0	3.0	C402_0083 EZ705U	600	1100	8.285	3339/403	2900	2500	4500	40	12.0	22	49
576	72	116	2.4	3.8	C402_0078 EZ505U	360	450	7.816	2001/256	3500	3200	5500	14	15.0	17	41
576	92	152	3.1	3.0	C402_0078 EZ703U	360	450	7.816	2001/256	3500	3200	5500	24	15.0	17	43
576	124	227	4.2	2.2	C402_0078 EZ705U	550	850	7.816	2001/256	3500	3200	5500	36	15.0	17	49
764	54	87	2.3	4.6	C402_0059 EZ505U	319	399	5.891	377/64	3300	2800	5000	15	15.0	17	41
764	69	114	3.0	3.6	C402_0059 EZ703U	319	399	5.891	377/64	3300	2800	5000	25	15.0	17	43
764	94	171	4.0	2.7	C402_0059 EZ705U	542	850	5.891	377/64	3300	2800	5000	37	15.0	17	49
961	55	91	2.8	4.2	C402_0047 EZ703U	273	341	4.682	899/192	3300	2800	5000	26	15.0	17	43
961	74	136	3.9	3.1	C402_0047 EZ705U	472	800	4.682	899/192	3300	2800	5000	39	15.0	17	49
1156	46	76	2.8	4.8	C402_0039 EZ703U	227	283	3.894	841/216	2900	2500	4500	28	15.0	17	43
1156	62	113	3.7	3.5	C402_0039 EZ705U	393	713	3.894	841/216	2900	2500	4500	40	15.0	17	49
1452	49	90	3.6	4.1	C402_0031 EZ705U	313	599	3.099	1537/496	2900	2500	4500	42	15.0	17	49

n_{2N} [rpm]	M_{2N} [Nm]	$M_{2,0}$ [Nm]	a_{th}	S	Type	M_{2acc} [Nm]	M_{2NOT} [Nm]	i	i_{exakt}	n_{1maxDB} EL1,2,3,4 [rpm]	n_{1maxDB} EL5,6 [rpm]	n_{1maxZB} [rpm]	J_1 [kgcm²]	$\Delta\varphi_2$ [arcmin]	C_2 [Nm/arcmin]	m [kg]
C5 (n_{1N} = 2000 min^{-1}, $M_{2acc,max}$ = 920 Nm)																
96	788	884	6.0	1.0	C502_0210 EZ813U	920	1600	20.84	667/32	3400	3000	5000	107	12.0	23	78
114	666	747	5.6	1.2	C502_0175 EZ813U	850	1600	17.60	845/48	3100	2700	4500	109	12.0	23	78
127	594	666	5.2	1.3	C502_0155 EZ813U	920	1600	15.71	377/24	3100	2700	4500	109	12.0	23	78
144	527	591	4.9	1.5	C502_0140 EZ813U	850	1600	13.93	195/14	3100	2700	4500	111	12.0	23	78
144	780	929	7.3	1.0	C502_0140 EZ815U	850	1600	13.93	195/14	3100	2700	4500	174	12.0	23	90
161	470	527	4.7	1.7	C502_0125 EZ813U	920	1600	12.43	87/7	3100	2700	4500	111	12.0	23	78
161	696	829	6.9	1.1	C502_0125 EZ815U	920	1600	12.43	87/7	3100	2700	4500	174	12.0	23	90
172	440	494	4.5	1.8	C502_0115 EZ813U	850	1600	11.64	1885/162	2800	2400	4000	112	12.0	23	78
172	652	776	6.7	1.2	C502_0115 EZ815U	850	1600	11.64	1885/162	2800	2400	4000	175	12.0	23	90
193	393	440	4.3	2.0	C502_0105 EZ813U	920	1600	10.38	841/81	2800	2400	4000	113	12.0	23	78
193	582	693	6.3	1.4	C502_0105 EZ815U	920	1600	10.38	841/81	2800	2400	4000	176	12.0	23	90
216	350	393	4.0	2.3	C502_0093 EZ813U	850	1600	9.261	3445/372	2800	2400	4000	115	12.0	23	78
216	519	618	6.0	1.5	C502_0093 EZ815U	850	1600	9.261	3445/372	2800	2400	4000	178	12.0	23	90
242	313	351	4.0	2.5	C502_0083 EZ813U	920	1600	8.263	1537/186	2800	2400	4000	115	12.0	23	78
242	463	551	5.9	1.7	C502_0083 EZ815U	920	1600	8.263	1537/186	2800	2400	4000	178	12.0	23	90
258	294	329	5.3	1.9	C502_0078 EZ813U	800	1110	7.763	621/80	3400	3000	5000	108	14.0	21	78
258	435	518	7.8	1.3	C502_0078 EZ815U	800	1110	7.763	621/80	3400	3000	5000	171	14.0	21	90
342	221	248	5.0	2.3	C502_0059 EZ813U	774	967	5.850	117/20	3100	2700	4500	110	14.0	21	78
342	328	390	7.5	1.5	C502_0059 EZ815U	774	967	5.850	117/20	3100	2700	4500	173	14.0	21	90
432	175	196	4.9	2.7	C502_0046 EZ813U	629	881	4.629	162/35	3100	2700	4500	113	14.0	21	78
432	259	309	7.2	1.8	C502_0046 EZ815U	704	881	4.629	162/35	3100	2700	4500	176	14.0	21	90
517	146	164	4.7	3.0	C502_0039 EZ813U	525	750	3.867	58/15	2800	2400	4000	115	14.0	21	78
517	217	258	7.0	2.0	C502_0039 EZ815U	600	750	3.867	58/15	2800	2400	4000	178	14.0	21	90
650	116	131	4.5	3.5	C502_0031 EZ813U	418	597	3.077	477/155	2800	2400	4000	120	14.0	21	78
650	172	205	6.7	2.4	C502_0031 EZ815U	478	597	3.077	477/155	2800	2400	4000	183	14.0	21	90
1012	75	84	4.2	4.7	C502_0020 EZ813U	268	719	1.976	81/41	2400	2000	3200	134	14.0	21	78
1012	111	132	6.2	3.2	C502_0020 EZ815U	383	719	1.976	81/41	2400	2000	3200	197	14.0	21	90
C5 (n_{1N} = 3000 min^{-1}, $M_{2acc,max}$ = 920 Nm)																
17	743	812	1.9	1.1	C503_1810 EZ501U	850	1600	180.6	8671/48	3400	3000	5000	3.1	12.0	23	51
22	556	608	1.7	1.4	C503_1350 EZ501U	850	1600	135.3	406/3	3400	3000	5000	3.2	12.0	23	51
28	447	488	1.5	1.8	C503_1090 EZ501U	850	1600	108.6	31291/288	3400	3000	5000	3.2	12.0	23	51
28	769	831	2.6	1.0	C503_1090 EZ502U	850	1600	108.6	31291/288	3400	3000	5000	5.5	12.0	23	52
33	371	406	1.4	2.2	C503_0900 EZ501U	850	1491	90.32	8671/96	3400	3000	5000	3.3	12.0	23	51
33	639	691	2.4	1.3	C503_0900 EZ502U	850	1491	90.32	8671/96	3400	3000	5000	5.6	12.0	23	52
37	331	362	1.3	2.4	C503_0810 EZ501U	920	1331	80.60	19343/240	3400	3000	5000	3.3	12.0	23	51
37	570	616	2.2	1.4	C503_0810 EZ502U	920	1331	80.60	19343/240	3400	3000	5000	5.6	12.0	23	52
37	747	855	2.9	1.1	C503_0810 EZ503U	920	1331	80.60	19343/240	3400	3000	5000	8.0	12.0	23	54
43	292	319	1.2	2.7	C502_0700 EZ501U	850	1406	69.97	10075/144	3400	3000	5000	3.4	12.0	23	47
43	502	543	2.1	1.6	C502_0700 EZ502U	850	1406	69.97	10075/144	3400	3000	5000	5.7	12.0	23	48
43	502	563	2.1	1.6	C502_0700 EZ701U	850	1406	69.97	10075/144	3400	3000	5000	9.0	12.0	23	50
43	658	753	2.8	1.2	C502_0700 EZ503U	850	1406	69.97	10075/144	3400	3000	5000	8.1	12.0	23	50
48	260	285	1.3	2.7	C502_0620 EZ501U	857	1254	62.43	4495/72	3400	3000	5000	3.4	12.0	23	47
48	448	484	2.2	1.6	C502_0620 EZ502U	857	1254	62.43	4495/72	3400	3000	5000	5.7	12.0	23	48
48	448	503	2.2	1.6	C502_0620 EZ701U	857	1254	62.43	4495/72	3400	3000	5000	9.0	12.0	23	50
48	587	672	2.9	1.2	C502_0620 EZ503U	857	1254	62.43	4495/72	3400	3000	5000	8.1	12.0	23	50
54	233	255	1.1	3.4	C502_0560 EZ501U	850	1117	55.83	335/6	3400	3000	5000	3.6	12.0	23	47
54	401	433	1.9	2.0	C502_0560 EZ502U	850	1117	55.83	335/6	3400	3000	5000	5.9	12.0	23	48
54	401	450	1.9	2.0	C502_0560 EZ701U	850	1600	55.83	335/6	3400	3000	5000	9.2	12.0	23	50
54	525	601	2.5	1.5	C502_0560 EZ503U	850	1117	55.83	335/6	3400	3000	5000	8.3	12.0	23	50
54	650	780	3.0	1.2	C502_0560 EZ702U	850	1600	55.83	335/6	3400	3000	5000	14	12.0	23	53
54	731	867	3.4	1.1	C502_0560 EZ505U	850	1600	55.83	335/6	3400	3000	5000	13	12.0	23	53
60	208	227	1.0	3.8	C502_0500 EZ501U	773	997	49.82	1943/39	3400	3000	5000	3.6	12.0	23	47
60	358	387	1.8	2.2	C502_0500 EZ502U	797	997	49.82	1943/39	3400	3000	5000	5.9	12.0	23	48
60	358	401	1.8	2.2	C502_0500 EZ701U	920	1600	49.82	1943/39	3400	3000	5000	9.2	12.0	23	50
60	469	536	2.3	1.7	C502_0500 EZ503U	797	997	49.82	1943/39	3400	3000	5000	8.3	12.0	23	50
60	580	696	2.9	1.4	C502_0500 EZ702U	920	1600	49.82	1943/39	3400	3000	5000	14	12.0	23	53
60	652	773	3.2	1.2	C502_0500 EZ505U	920	1600	49.82	1943/39	3400	3000	5000	13	12.0	23	53
60	797	1005	4.0	1.0	C502_0500 EZ703U	920	1600	49.82	1943/39	3400	3000	5000	22	12.0	23	55
64	335	376	1.7	2.4	C502_0470 EZ701U	850	1600	46.72	1495/32	3400	3000	5000	9.5	12.0	23	50
64	544	653	2.8	1.5	C502_0470 EZ702U	850	1600	46.72	1495/32	3400	3000	5000	15	12.0	23	53
64	612	725	3.1	1.3	C502_0470 EZ505U	850	1600	46.72	1495/32	3400	3000	5000	13	12.0	23	53
64	748	943	3.8	1.1	C502_0470 EZ703U	850	1600	46.72	1495/32	3400	3000	5000	23	12.0	23	55
72	299	336	1.6	2.7	C502_0420 EZ701U	809	1600	41.69	667/16	3400	3000	5000	9.5	12.0	23	50
72	485	582	2.6	1.6	C502_0420 EZ702U	920	1600	41.69	667/16	3400	3000	5000	15	12.0	23	53

n_{2N} [rpm]	M_{2N} [Nm]	$M_{2,0}$ [Nm]	a_{th}	S	Type	M_{2acc} [Nm]	M_{2NOT} [Nm]	i	i_{exakt}	n_{1maxDB} EL1,2,3,4 [rpm]	n_{1maxDB} EL5,6 [rpm]	n_{1maxZB} [rpm]	J_1 [kgcm²]	$\Delta\varphi_2$ [arcmin]	C_2 [Nm/arcmin]	m [kg]
C5 (n_{1N} = 3000 min^{-1}, $M_{2acc,max}$ = 920 Nm)																
72	546	647	3.0	1.5	C502_0420 EZ505U	920	1600	41.69	667/16	3400	3000	5000	13	12.0	23	53
72	667	841	3.6	1.2	C502_0420 EZ703U	920	1600	41.69	667/16	3400	3000	5000	23	12.0	23	55
86	251	282	1.5	3.2	C502_0350 EZ701U	679	1600	35.00	35/1	3400	3000	5000	10	12.0	23	50
86	407	489	2.4	2.0	C502_0350 EZ702U	850	1600	35.00	35/1	3400	3000	5000	15	12.0	23	53
86	458	543	2.7	1.7	C502_0350 EZ505U	850	1600	35.00	35/1	3400	3000	5000	14	12.0	23	53
86	560	706	3.3	1.4	C502_0350 EZ703U	850	1600	35.00	35/1	3400	3000	5000	23	12.0	23	55
96	224	251	1.4	3.6	C502_0310 EZ701U	606	1524	31.23	406/13	3400	3000	5000	10	12.0	23	50
96	364	436	2.3	2.2	C502_0310 EZ702U	920	1524	31.23	406/13	3400	3000	5000	15	12.0	23	53
96	409	485	2.6	2.0	C502_0310 EZ505U	920	1524	31.23	406/13	3400	3000	5000	14	12.0	23	53
96	500	630	3.1	1.6	C502_0310 EZ703U	920	1524	31.23	406/13	3400	3000	5000	23	12.0	23	55
107	202	226	1.3	4.0	C502_0280 EZ701U	545	1600	28.10	5395/192	3400	3000	5000	11	12.0	23	50
107	327	392	2.2	2.4	C502_0280 EZ702U	850	1600	28.10	5395/192	3400	3000	5000	16	12.0	23	53
107	368	436	2.4	2.2	C502_0280 EZ505U	850	1600	28.10	5395/192	3400	3000	5000	14	12.0	23	53
107	450	567	3.0	1.8	C502_0280 EZ703U	850	1600	28.10	5395/192	3400	3000	5000	24	12.0	23	55
107	581	823	3.8	1.4	C502_0280 EZ705U	850	1600	28.10	5395/192	3400	3000	5000	36	12.0	23	60
120	180	202	1.3	4.4	C502_0250 EZ701U	486	1444	25.07	2407/96	3400	3000	5000	11	12.0	23	50
120	292	350	2.0	2.7	C502_0250 EZ702U	920	1444	25.07	2407/96	3400	3000	5000	16	12.0	23	53
120	328	389	2.3	2.4	C502_0250 EZ505U	920	1444	25.07	2407/96	3400	3000	5000	14	12.0	23	53
120	401	506	2.8	2.0	C502_0250 EZ703U	920	1444	25.07	2407/96	3400	3000	5000	24	12.0	23	55
120	518	734	3.6	1.5	C502_0250 EZ705U	920	1600	25.07	2407/96	3400	3000	5000	36	12.0	23	60
128	168	188	1.2	4.8	C502_0230 EZ701U	453	1491	23.36	1495/64	3400	3000	5000	12	12.0	23	50
128	272	326	2.0	2.9	C502_0230 EZ702U	850	1491	23.36	1495/64	3400	3000	5000	17	12.0	23	53
128	306	363	2.2	2.6	C502_0230 EZ505U	850	1491	23.36	1495/64	3400	3000	5000	15	12.0	23	53
128	374	471	2.7	2.1	C502_0230 EZ703U	850	1491	23.36	1495/64	3400	3000	5000	25	12.0	23	55
128	483	684	3.5	1.7	C502_0230 EZ705U	850	1600	23.36	1495/64	3400	3000	5000	37	12.0	23	60
144	243	291	1.9	3.3	C502_0210 EZ702U	829	1331	20.84	667/32	3400	3000	5000	17	12.0	23	53
144	273	323	2.1	2.9	C502_0210 EZ505U	920	1331	20.84	667/32	3400	3000	5000	15	12.0	23	53
144	334	421	2.6	2.4	C502_0210 EZ703U	920	1331	20.84	667/32	3400	3000	5000	25	12.0	23	55
144	431	611	3.3	1.9	C502_0210 EZ705U	920	1600	20.84	667/32	3400	3000	5000	37	12.0	23	60
170	364	516	3.0	2.2	C502_0175 EZ705U	850	1600	17.60	845/48	3100	2700	4500	39	12.0	23	60
191	325	460	2.9	2.5	C502_0155 EZ705U	920	1600	15.71	377/24	3100	2700	4500	39	12.0	23	60
215	162	195	1.5	4.9	C502_0140 EZ702U	554	1013	13.93	195/14	3100	2700	4500	20	12.0	23	53
215	182	216	1.7	4.4	C502_0140 EZ505U	811	1013	13.93	195/14	3100	2700	4500	18	12.0	23	53
215	223	281	2.1	3.6	C502_0140 EZ703U	811	1013	13.93	195/14	3100	2700	4500	28	12.0	23	55
215	288	408	2.7	2.8	C502_0140 EZ705U	850	1600	13.93	195/14	3100	2700	4500	40	12.0	23	60
241	145	174	1.6	5.0	C502_0125 EZ702U	494	904	12.43	87/7	3100	2700	4500	20	12.0	23	53
241	163	193	1.8	4.4	C502_0125 EZ505U	723	904	12.43	87/7	3100	2700	4500	18	12.0	23	53
241	199	251	2.2	3.6	C502_0125 EZ703U	723	904	12.43	87/7	3100	2700	4500	28	12.0	23	55
241	257	364	2.7	3.0	C502_0125 EZ705U	920	1600	12.43	87/7	3100	2700	4500	40	12.0	23	60
258	240	341	2.6	3.1	C502_0115 EZ705U	850	1600	11.64	1885/162	2800	2400	4000	42	12.0	23	60
289	215	304	2.6	3.4	C502_0105 EZ705U	920	1600	10.38	841/81	2800	2400	4000	42	12.0	23	60
324	191	271	2.5	3.6	C502_0093 EZ705U	850	1600	9.261	3445/372	2800	2400	4000	45	12.0	23	60
363	171	242	2.5	3.9	C502_0083 EZ705U	834	1600	8.263	1537/186	2800	2400	4000	45	12.0	23	60
386	90	108	2.3	4.4	C502_0078 EZ702U	309	496	7.763	621/80	3400	3000	5000	18	14.0	21	53
386	102	120	2.6	3.9	C502_0078 EZ505U	396	496	7.763	621/80	3400	3000	5000	16	14.0	21	53
386	124	157	3.1	3.2	C502_0078 EZ703U	396	496	7.763	621/80	3400	3000	5000	25	14.0	21	55
386	160	227	3.3	3.0	C502_0078 EZ705U	783	1110	7.763	621/80	3400	3000	5000	38	14.0	21	60
513	121	171	3.2	3.7	C502_0059 EZ705U	590	967	5.850	117/20	3100	2700	4500	40	14.0	21	60
648	54	65	2.6	5.0	C502_0046 EZ702U	184	337	4.629	162/35	3100	2700	4500	22	14.0	21	53
648	61	72	2.9	4.4	C502_0046 EZ505U	269	337	4.629	162/35	3100	2700	4500	20	14.0	21	53
648	74	93	3.6	3.6	C502_0046 EZ703U	269	337	4.629	162/35	3100	2700	4500	30	14.0	21	55
648	96	136	3.0	4.3	C502_0046 EZ705U	467	881	4.629	162/35	3100	2700	4500	42	14.0	21	60
776	80	113	2.9	4.8	C502_0039 EZ705U	390	750	3.867	58/15	2800	2400	4000	45	14.0	21	60
C5 (n_{1N} = 4000 min^{-1}, $M_{2acc,max}$ = 920 Nm)																
142	687	1191	4.5	1.2	C502_0280 EZ813U	850	1600	28.10	5395/192	3400	3000	5000	107	12.0	23	78
142	712	1830	4.7	1.1	C502_0280 EZ815U	850	1600	28.10	5395/192	3400	3000	5000	170	12.0	23	90
160	613	1063	4.3	1.3	C502_0250 EZ813U	920	1600	25.07	2407/96	3400	3000	5000	107	12.0	23	78
160	635	1633	4.4	1.3	C502_0250 EZ815U	920	1600	25.07	2407/96	3400	3000	5000	170	12.0	23	90
171	571	990	4.1	1.4	C502_0230 EZ813U	850	1600	23.36	1495/64	3400	3000	5000	107	12.0	23	78
171	592	1521	4.3	1.4	C502_0230 EZ815U	850	1600	23.36	1495/64	3400	3000	5000	171	12.0	23	90
192	510	884	3.9	1.6	C502_0210 EZ813U	920	1600	20.84	667/32	3400	3000	5000	107	12.0	23	78
192	528	1357	4.0	1.5	C502_0210 EZ815U	920	1600	20.84	667/32	3400	3000	5000	171	12.0	23	90
227	430	746	3.7	1.8	C502_0175 EZ813U	850	1600	17.60	845/48	3100	2700	4500	109	12.0	23	78
227	446	1146	3.8	1.8	C502_0175 EZ815U	850	1600	17.60	845/48	3100	2700	4500	172	12.0	23	90

n_{2N} [rpm]	M_{2N} [Nm]	$M_{2,0}$ [Nm]	a_{th}	S	Type	M_{2acc} [Nm]	M_{2NOT} [Nm]	i	i_{exakt}	n_{1maxDB} EL1,2,3,4 [rpm]	n_{1maxDB} EL5,6 [rpm]	n_{1maxZB} [rpm]	J_1 [kgcm²]	$\Delta\varphi_2$ [arcmin]	C_2 [Nm/arcmin]	m [kg]
C5 (n_{1N} = 4000 min^{-1}, $M_{2acc,max}$ = 920 Nm)																
255	384	666	3.6	2.0	C502_0155 EZ813U	920	1600	15.71	377/24	3100	2700	4500	109	12.0	23	78
255	398	1023	3.7	1.9	C502_0155 EZ815U	920	1600	15.71	377/24	3100	2700	4500	172	12.0	23	90
287	340	590	3.5	2.1	C502_0140 EZ813U	850	1600	13.93	195/14	3100	2700	4500	111	12.0	23	78
287	353	907	3.7	2.1	C502_0140 EZ815U	850	1600	13.93	195/14	3100	2700	4500	174	12.0	23	90
322	304	527	3.5	2.3	C502_0125 EZ813U	920	1600	12.43	87/7	3100	2700	4500	111	12.0	23	78
322	315	809	3.6	2.2	C502_0125 EZ815U	920	1600	12.43	87/7	3100	2700	4500	174	12.0	23	90
344	284	493	3.4	2.4	C502_0115 EZ813U	850	1600	11.64	1885/162	2800	2400	4000	112	12.0	23	78
344	295	758	3.5	2.3	C502_0115 EZ815U	850	1600	11.64	1885/162	2800	2400	4000	175	12.0	23	90
385	254	440	3.4	2.6	C502_0105 EZ813U	920	1600	10.38	841/81	2800	2400	4000	113	12.0	23	78
385	263	676	3.5	2.5	C502_0105 EZ815U	920	1600	10.38	841/81	2800	2400	4000	176	12.0	23	90
432	226	393	3.3	2.8	C502_0093 EZ813U	850	1600	9.261	3445/372	2800	2400	4000	115	12.0	23	78
432	235	603	3.4	2.7	C502_0093 EZ815U	850	1600	9.261	3445/372	2800	2400	4000	178	12.0	23	90
484	202	350	3.2	3.0	C502_0083 EZ813U	920	1600	8.263	1537/186	2800	2400	4000	115	12.0	23	78
484	209	538	3.3	2.9	C502_0083 EZ815U	920	1600	8.263	1537/186	2800	2400	4000	178	12.0	23	90
515	190	329	4.3	2.3	C502_0078 EZ813U	800	1110	7.763	621/80	3400	3000	5000	108	14.0	21	78
515	197	506	4.5	2.3	C502_0078 EZ815U	800	1110	7.763	621/80	3400	3000	5000	171	14.0	21	90
684	143	248	4.1	2.8	C502_0059 EZ813U	774	967	5.850	117/20	3100	2700	4500	110	14.0	21	78
684	148	381	4.3	2.7	C502_0059 EZ815U	774	967	5.850	117/20	3100	2700	4500	173	14.0	21	90
864	113	196	4.0	3.3	C502_0046 EZ813U	629	881	4.629	162/35	3100	2700	4500	113	14.0	21	78
864	117	301	4.1	3.2	C502_0046 EZ815U	704	881	4.629	162/35	3100	2700	4500	176	14.0	21	90
1034	95	164	3.8	3.7	C502_0039 EZ813U	525	750	3.867	58/15	2800	2400	4000	115	14.0	21	78
1034	98	252	4.0	3.6	C502_0039 EZ815U	600	750	3.867	58/15	2800	2400	4000	178	14.0	21	90
1300	75	130	3.7	4.3	C502_0031 EZ813U	418	597	3.077	477/155	2800	2400	4000	120	14.0	21	78
1300	78	200	3.8	4.2	C502_0031 EZ815U	478	597	3.077	477/155	2800	2400	4000	183	14.0	21	90
C5 (n_{1N} = 4500 min^{-1}, $M_{2acc,max}$ = 920 Nm)																
81	515	829	2.4	1.6	C502_0560 EZ505U	850	1600	55.83	335/6	3400	3000	5000	13	12.0	23	53
81	655	1083	3.1	1.2	C502_0560 EZ703U	850	1600	55.83	335/6	3400	3000	5000	22	12.0	23	55
90	459	739	2.3	1.7	C502_0500 EZ505U	920	1600	49.82	1943/39	3400	3000	5000	13	12.0	23	53
90	585	967	2.9	1.4	C502_0500 EZ703U	920	1600	49.82	1943/39	3400	3000	5000	22	12.0	23	55
96	431	693	2.2	1.9	C502_0470 EZ505U	850	1600	46.72	1495/32	3400	3000	5000	13	12.0	23	53
96	548	906	2.8	1.5	C502_0470 EZ703U	850	1600	46.72	1495/32	3400	3000	5000	23	12.0	23	55
108	384	619	2.1	2.1	C502_0420 EZ505U	920	1600	41.69	667/16	3400	3000	5000	13	12.0	23	53
108	489	809	2.7	1.6	C502_0420 EZ703U	920	1600	41.69	667/16	3400	3000	5000	23	12.0	23	55
129	323	519	1.9	2.5	C502_0350 EZ505U	850	1600	35.00	35/1	3400	3000	5000	14	12.0	23	53
129	411	679	2.4	1.9	C502_0350 EZ703U	850	1600	35.00	35/1	3400	3000	5000	23	12.0	23	55
144	288	463	1.8	2.8	C502_0310 EZ505U	920	1524	31.23	406/13	3400	3000	5000	14	12.0	23	53
144	367	606	2.3	2.2	C502_0310 EZ703U	920	1524	31.23	406/13	3400	3000	5000	23	12.0	23	55
160	259	417	1.7	3.1	C502_0280 EZ505U	850	1600	28.10	5395/192	3400	3000	5000	14	12.0	23	53
160	330	545	2.2	2.4	C502_0280 EZ703U	850	1600	28.10	5395/192	3400	3000	5000	24	12.0	23	55
160	447	818	3.0	1.8	C502_0280 EZ705U	850	1600	28.10	5395/192	3400	3000	5000	36	12.0	23	60
179	231	372	1.6	3.5	C502_0250 EZ505U	920	1444	25.07	2407/96	3400	3000	5000	14	12.0	23	53
179	294	486	2.1	2.7	C502_0250 EZ703U	920	1444	25.07	2407/96	3400	3000	5000	24	12.0	23	55
179	399	730	2.8	2.0	C502_0250 EZ705U	920	1600	25.07	2407/96	3400	3000	5000	36	12.0	23	60
193	215	347	1.6	3.7	C502_0230 EZ505U	850	1491	23.36	1495/64	3400	3000	5000	15	12.0	23	53
193	274	453	2.0	2.9	C502_0230 EZ703U	850	1491	23.36	1495/64	3400	3000	5000	25	12.0	23	55
193	372	680	2.7	2.2	C502_0230 EZ705U	850	1600	23.36	1495/64	3400	3000	5000	37	12.0	23	60
216	192	309	1.5	4.2	C502_0210 EZ505U	920	1331	20.84	667/32	3400	3000	5000	15	12.0	23	53
216	245	404	1.9	3.3	C502_0210 EZ703U	920	1331	20.84	667/32	3400	3000	5000	25	12.0	23	55
216	332	607	2.6	2.4	C502_0210 EZ705U	920	1600	20.84	667/32	3400	3000	5000	37	12.0	23	60
256	280	512	2.5	2.7	C502_0175 EZ705U	850	1600	17.60	845/48	3100	2700	4500	39	12.0	23	60
286	250	457	2.4	2.9	C502_0155 EZ705U	920	1600	15.71	377/24	3100	2700	4500	39	12.0	23	60
323	163	270	1.8	4.3	C502_0140 EZ703U	811	1013	13.93	195/14	3100	2700	4500	28	12.0	23	55
323	222	405	2.4	3.1	C502_0140 EZ705U	850	1600	13.93	195/14	3100	2700	4500	40	12.0	23	60
362	146	241	1.7	4.6	C502_0125 EZ703U	723	904	12.43	87/7	3100	2700	4500	28	12.0	23	55
362	198	362	2.3	3.4	C502_0125 EZ705U	920	1600	12.43	87/7	3100	2700	4500	40	12.0	23	60
580	91	151	2.3	4.4	C502_0078 EZ703U	396	496	7.763	621/80	3400	3000	5000	25	14.0	21	55
580	123	226	2.9	3.4	C502_0078 EZ705U	783	1110	7.763	621/80	3400	3000	5000	38	14.0	21	60
769	93	170	2.8	4.2	C502_0059 EZ705U	590	967	5.850	117/20	3100	2700	4500	40	14.0	21	60
972	54	90	2.6	5.0	C502_0046 EZ703U	269	337	4.629	162/35	3100	2700	4500	30	14.0	21	55
972	74	135	2.7	4.9	C502_0046 EZ705U	467	881	4.629	162/35	3100	2700	4500	42	14.0	21	60
C6 (n_{1N} = 2000 min^{-1}, $M_{2acc,max}$ = 1650 Nm)																
62	1226	1375	4.5	1.2	C612_0320 EZ813U	1650	2900	32.41	1037/32	3200	2900	4500	107	10.0	74	93
73	1037	1163	4.6	1.3	C612_0270 EZ813U	1380	2600	27.43	192/7	3200	2900	4500	110	10.0	74	93
80	943	1057	3.9	1.5	C612_0250 EZ813U	1650	2900	24.93	5185/208	3200	2900	4500	108	10.0	74	93

n_{2N} [rpm]	M_{2N} [Nm]	$M_{2,0}$ [Nm]	a_{th}	S	Type	M_{2acc} [Nm]	M_{2NOT} [Nm]	i	i_{exakt}	n_{1maxDB} EL1,2,3,4 [rpm]	n_{1maxDB} EL5,6 [rpm]	n_{1maxZB} [rpm]	J_1 [kgcm²]	$\Delta\varphi_2$ [arcmin]	C_2 [Nm/arcmin]	m [kg]
C6 (n_{1N} = 2000 min^{-1}, $M_{2acc,max}$ = 1650 Nm)																
80	1396	1663	5.8	1.0	C612_0250 EZ815U	1650	2900	24.93	5185/208	3200	2900	4500	171	10.0	74	106
88	857	961	4.2	1.5	C612_0230 EZ813U	1380	2600	22.67	68/3	3200	2900	4500	111	10.0	74	93
88	1270	1512	6.2	1.0	C612_0230 EZ815U	1380	2600	22.67	68/3	3200	2900	4500	174	10.0	74	106
102	742	832	3.6	1.9	C612_0195 EZ813U	1650	2560	19.61	549/28	3200	2900	4500	110	10.0	74	93
102	1098	1308	5.3	1.3	C612_0195 EZ815U	1650	2560	19.61	549/28	3200	2900	4500	173	10.0	74	106
114	666	747	3.7	2.0	C612_0175 EZ813U	1380	2600	17.60	88/5	3000	2600	4000	115	10.0	74	93
114	986	1174	5.4	1.3	C612_0175 EZ815U	1380	2600	17.60	88/5	3000	2600	4000	178	10.0	74	106
123	613	687	3.5	2.2	C612_0160 EZ813U	1650	2900	16.20	1037/64	3200	2900	4500	112	10.0	74	93
123	908	1081	5.1	1.5	C612_0160 EZ815U	1650	2900	16.20	1037/64	3200	2900	4500	175	10.0	74	106
141	535	600	3.4	2.4	C612_0140 EZ813U	1380	2600	14.15	976/69	3000	2600	4000	118	10.0	74	93
141	792	943	5.0	1.6	C612_0140 EZ815U	1380	2600	14.15	976/69	3000	2600	4000	181	10.0	74	106
159	476	534	3.3	2.6	C612_0125 EZ813U	1650	2900	12.58	2013/160	3000	2600	4000	115	10.0	74	93
159	705	839	4.9	1.7	C612_0125 EZ815U	1650	2900	12.58	2013/160	3000	2600	4000	178	10.0	74	106
175	433	486	3.3	2.7	C612_0115 EZ813U	1380	2600	11.46	928/81	2700	2300	3800	122	10.0	74	93
175	642	764	4.8	1.8	C612_0115 EZ815U	1380	2600	11.46	928/81	2700	2300	3800	185	10.0	74	106
198	382	429	3.2	3.0	C612_0100 EZ813U	1373	2900	10.11	3721/368	3000	2600	4000	119	10.0	74	93
198	566	674	4.7	2.0	C612_0100 EZ815U	1650	2900	10.11	3721/368	3000	2600	4000	182	10.0	74	106
219	345	387	3.1	3.2	C612_0091 EZ813U	1238	2600	9.118	848/93	2700	2300	3800	128	10.0	74	93
219	511	608	4.6	2.1	C612_0091 EZ815U	1380	2600	9.118	848/93	2700	2300	3800	191	10.0	74	106
244	310	347	3.1	3.4	C612_0082 EZ813U	1112	2900	8.190	1769/216	2700	2300	3800	123	10.0	74	93
244	459	546	4.6	2.3	C612_0082 EZ815U	1589	2900	8.190	1769/216	2700	2300	3800	186	10.0	74	106
281	269	302	3.0	3.7	C612_0071 EZ813U	966	2586	7.111	64/9	2300	1900	3000	137	10.0	74	93
281	398	474	4.5	2.5	C612_0071 EZ815U	1380	2586	7.111	64/9	2300	1900	3000	200	10.0	74	106
307	247	276	3.0	4.0	C612_0065 EZ813U	885	2372	6.518	3233/496	2700	2300	3800	130	10.0	74	93
307	365	435	4.4	2.7	C612_0065 EZ815U	1264	2372	6.518	3233/496	2700	2300	3800	193	10.0	74	106
342	221	248	2.9	4.3	C612_0059 EZ813U	795	2130	5.854	240/41	2300	1900	3000	146	10.0	74	93
342	328	390	4.3	2.9	C612_0059 EZ815U	1136	2130	5.854	240/41	2300	1900	3000	209	10.0	74	106
393	192	216	2.8	4.7	C612_0051 EZ813U	690	1849	5.083	61/12	2300	1900	3000	140	10.0	74	93
393	285	339	4.2	3.2	C612_0051 EZ815U	986	1849	5.083	61/12	2300	1900	3000	204	10.0	74	106
478	234	279	4.1	3.6	C612_0042 EZ815U	812	1523	4.184	2745/656	2300	1900	3000	214	10.0	74	106
C6 (n_{1N} = 3000 min^{-1}, $M_{2acc,max}$ = 1650 Nm)																
11	1095	1197	1.5	1.2	C613_2660 EZ501U	1380	2289	266.4	7192/27	3200	2900	4500	3.1	10.0	74	71
14	876	957	1.4	1.5	C613_2130 EZ501U	1380	2230	213.1	28768/135	3200	2900	4500	3.2	10.0	74	71
17	1256	1409	2.2	1.0	C613_1780 EZ701U	1380	2600	177.6	1598/9	3200	2900	4500	9.1	10.0	74	74
17	721	788	1.3	1.8	C613_1750 EZ501U	1380	1992	175.3	7888/45	3200	2900	4500	3.2	10.0	74	71
17	1240	1341	2.2	1.0	C613_1750 EZ502U	1380	1992	175.3	7888/45	3200	2900	4500	5.5	10.0	74	72
22	966	1084	1.9	1.3	C613_1370 EZ701U	1380	2600	136.6	15980/117	3200	2900	4500	9.2	10.0	74	74
22	554	606	1.1	2.3	C613_1350 EZ501U	1376	1720	134.8	15776/117	3200	2900	4500	3.3	10.0	74	71
22	954	1031	1.9	1.4	C613_1350 EZ502U	1376	1720	134.8	15776/117	3200	2900	4500	5.6	10.0	74	72
22	1250	1431	2.5	1.0	C613_1350 EZ503U	1376	1720	134.8	15776/117	3200	2900	4500	8.0	10.0	74	74
24	898	1007	1.6	1.6	C613_1270 EZ701U	1650	2900	126.9	48739/384	3200	2900	4500	9.1	10.0	74	74
28	760	852	1.7	1.7	C613_1070 EZ701U	1380	2600	107.4	752/7	3200	2900	4500	9.3	10.0	74	74
28	1232	1479	2.7	1.1	C613_1070 EZ702U	1380	2600	107.4	752/7	3200	2900	4500	15	10.0	74	76
28	436	477	1.0	2.9	C613_1060 EZ501U	1277	1597	106.1	3712/35	3200	2900	4500	3.4	10.0	74	71
28	750	811	1.7	1.7	C613_1060 EZ502U	1277	1597	106.1	3712/35	3200	2900	4500	5.7	10.0	74	72
28	983	1125	2.3	1.3	C613_1060 EZ503U	1277	1597	106.1	3712/35	3200	2900	4500	8.1	10.0	74	74
31	691	775	1.4	2.1	C613_0980 EZ701U	1650	2900	97.63	243695/2496	3200	2900	4500	9.2	10.0	74	74
31	1120	1344	2.3	1.3	C613_0980 EZ702U	1650	2900	97.63	243695/2496	3200	2900	4500	14	10.0	74	76
34	628	704	1.5	2.1	C613_0890 EZ701U	1380	2600	88.78	799/9	3200	2900	4500	9.4	10.0	74	74
34	1018	1222	2.5	1.3	C613_0890 EZ702U	1380	2600	88.78	799/9	3200	2900	4500	15	10.0	74	76
39	543	609	1.3	2.7	C613_0770 EZ701U	1468	2560	76.80	8601/112	3200	2900	4500	9.3	10.0	74	74
39	881	1057	2.1	1.6	C613_0770 EZ702U	1650	2560	76.80	8601/112	3200	2900	4500	15	10.0	74	76
39	1211	1527	2.9	1.2	C613_0770 EZ703U	1650	2560	76.80	8601/112	3200	2900	4500	22	10.0	74	78
40	312	341	1.2	2.9	C613_0760 EZ501U	913	1141	75.81	5307/70	3200	2900	4500	3.4	10.0	74	71
40	536	580	2.1	1.7	C613_0760 EZ502U	913	1141	75.81	5307/70	3200	2900	4500	5.7	10.0	74	72
40	703	805	2.7	1.3	C613_0760 EZ503U	913	1141	75.81	5307/70	3200	2900	4500	8.1	10.0	74	74
44	494	555	1.4	2.6	C612_0690 EZ701U	1336	2289	68.89	620/9	3200	2900	4500	9.6	10.0	74	65
44	802	962	2.2	1.6	C612_0690 EZ702U	1380	2289	68.89	620/9	3200	2900	4500	15	10.0	74	68
44	1103	1390	3.1	1.2	C612_0690 EZ703U	1380	2289	68.89	620/9	3200	2900	4500	23	10.0	74	70
47	449	504	1.2	3.1	C613_0630 EZ701U	1213	2296	63.46	48739/768	3200	2900	4500	9.4	10.0	74	74
47	728	874	2.0	1.9	C613_0630 EZ702U	1650	2296	63.46	48739/768	3200	2900	4500	15	10.0	74	76
47	1001	1262	2.7	1.4	C613_0630 EZ703U	1650	2296	63.46	48739/768	3200	2900	4500	23	10.0	74	78
54	396	444	1.2	3.3	C612_0550 EZ701U	1069	2230	55.11	496/9	3200	2900	4500	10	10.0	74	65
54	641	770	2.0	2.0	C612_0550 EZ702U	1380	2230	55.11	496/9	3200	2900	4500	15	10.0	74	68

n_{2N} [rpm]	M_{2N} [Nm]	$M_{2,0}$ [Nm]	a_{th}	S	Type	M_{2acc} [Nm]	M_{2NOT} [Nm]	i	i_{exakt}	n_{1maxDB} EL1,2,3,4 [rpm]	n_{1maxDB} EL5,6 [rpm]	n_{1maxZB} [rpm]	J_1 [kgcm²]	$\Delta\varphi_2$ [arcmin]	C_2 [Nm/arcmin]	m [kg]
C6 (n_{1N} = 3000 min^{-1}, $M_{2acc,max}$ = 1650 Nm)																
54	882	1112	2.7	1.5	C612_0550 EZ703U	1380	2230	55.11	496/9	3200	2900	4500	23	10.0	74	70
61	349	391	1.2	3.7	C613_0490 EZ701U	942	1931	49.28	31537/640	3200	2900	4500	9.7	10.0	74	74
61	565	678	1.9	2.3	C613_0490 EZ702U	1545	1931	49.28	31537/640	3200	2900	4500	15	10.0	74	76
61	777	980	2.6	1.6	C613_0490 EZ703U	1545	1931	49.28	31537/640	3200	2900	4500	23	10.0	74	78
66	325	365	1.1	4.0	C612_0450 EZ701U	879	1992	45.33	136/3	3200	2900	4500	11	10.0	74	65
66	528	633	1.8	2.5	C612_0450 EZ702U	1380	1992	45.33	136/3	3200	2900	4500	16	10.0	74	68
66	726	915	2.5	1.8	C612_0450 EZ703U	1380	1992	45.33	136/3	3200	2900	4500	24	10.0	74	70
66	937	1328	3.2	1.4	C612_0450 EZ705U	1380	2600	45.33	136/3	3200	2900	4500	36	10.0	74	75
76	283	317	1.1	4.3	C612_0390 EZ701U	764	1595	39.40	1891/48	3200	2900	4500	10	10.0	74	65
76	459	550	1.8	2.7	C612_0390 EZ702U	1276	1595	39.40	1891/48	3200	2900	4500	15	10.0	74	68
76	631	795	2.5	1.9	C612_0390 EZ703U	1276	1595	39.40	1891/48	3200	2900	4500	23	10.0	74	70
86	406	487	1.6	3.2	C612_0350 EZ702U	1376	1720	34.87	1360/39	3200	2900	4500	17	10.0	74	68
86	558	704	2.2	2.3	C612_0350 EZ703U	1376	1720	34.87	1360/39	3200	2900	4500	25	10.0	74	70
86	720	1022	2.8	1.8	C612_0350 EZ705U	1380	2600	34.87	1360/39	3200	2900	4500	38	10.0	74	75
93	233	261	1.1	4.9	C612_0320 EZ701U	629	1424	32.41	1037/32	3200	2900	4500	11	10.0	74	65
93	377	453	1.7	3.0	C612_0320 EZ702U	1139	1424	32.41	1037/32	3200	2900	4500	16	10.0	74	68
93	519	654	2.4	2.2	C612_0320 EZ703U	1139	1424	32.41	1037/32	3200	2900	4500	24	10.0	74	70
93	670	949	2.4	2.2	C612_0320 EZ705U	1650	2900	32.41	1037/32	3200	2900	4500	36	10.0	74	75
109	319	383	1.4	4.0	C612_0270 EZ702U	1091	1597	27.43	192/7	3200	2900	4500	19	10.0	74	68
109	439	553	2.0	2.9	C612_0270 EZ703U	1277	1597	27.43	192/7	3200	2900	4500	27	10.0	74	70
109	567	804	2.5	2.3	C612_0270 EZ705U	1380	2600	27.43	192/7	3200	2900	4500	39	10.0	74	75
120	290	348	1.8	3.4	C612_0250 EZ702U	984	1230	24.93	5185/208	3200	2900	4500	17	10.0	74	68
120	399	503	2.4	2.5	C612_0250 EZ703U	984	1230	24.93	5185/208	3200	2900	4500	25	10.0	74	70
120	515	730	2.3	2.6	C612_0250 EZ705U	1650	2900	24.93	5185/208	3200	2900	4500	38	10.0	74	75
132	468	664	2.3	2.8	C612_0230 EZ705U	1380	2600	22.67	68/3	3200	2900	4500	41	10.0	74	75
153	228	274	1.7	4.0	C612_0195 EZ702U	780	1141	19.61	549/28	3200	2900	4500	19	10.0	74	68
153	314	396	2.3	2.9	C612_0195 EZ703U	913	1141	19.61	549/28	3200	2900	4500	27	10.0	74	70
153	405	574	2.2	3.0	C612_0195 EZ705U	1650	2560	19.61	549/28	3200	2900	4500	39	10.0	74	75
170	364	516	2.2	3.3	C612_0175 EZ705U	1380	2600	17.60	88/5	3000	2600	4000	44	10.0	74	75
185	335	475	2.2	3.5	C612_0160 EZ705U	1635	2296	16.20	1037/64	3200	2900	4500	41	10.0	74	75
212	292	414	2.1	3.8	C612_0140 EZ705U	1380	2516	14.15	976/69	3000	2600	4000	48	10.0	74	75
238	260	369	2.1	4.1	C612_0125 EZ705U	1269	2120	12.58	2013/160	3000	2600	4000	45	10.0	74	75
262	237	336	2.0	4.4	C612_0115 EZ705U	1156	2217	11.46	928/81	2700	2300	3800	52	10.0	74	75
297	209	296	2.0	4.7	C612_0100 EZ705U	1020	1799	10.11	3721/368	3000	2600	4000	49	10.0	74	75
C6 (n_{1N} = 4000 min^{-1}, $M_{2acc,max}$ = 1650 Nm)																
88	1108	1922	3.8	1.2	C612_0450 EZ813U	1380	2600	45.33	136/3	3200	2900	4500	107	10.0	74	93
88	1148	2952	3.9	1.1	C612_0450 EZ815U	1380	2600	45.33	136/3	3200	2900	4500	170	10.0	74	106
115	852	1478	3.3	1.5	C612_0350 EZ813U	1380	2600	34.87	1360/39	3200	2900	4500	108	10.0	74	93
115	883	2271	3.5	1.5	C612_0350 EZ815U	1380	2600	34.87	1360/39	3200	2900	4500	171	10.0	74	106
123	792	1374	3.2	1.7	C612_0320 EZ813U	1650	2900	32.41	1037/32	3200	2900	4500	107	10.0	74	93
123	821	2110	3.3	1.6	C612_0320 EZ815U	1650	2900	32.41	1037/32	3200	2900	4500	170	10.0	74	106
146	670	1163	3.1	1.9	C612_0270 EZ813U	1380	2600	27.43	192/7	3200	2900	4500	110	10.0	74	93
146	695	1786	3.2	1.8	C612_0270 EZ815U	1380	2600	27.43	192/7	3200	2900	4500	173	10.0	74	106
160	609	1057	3.0	2.0	C612_0250 EZ813U	1650	2900	24.93	5185/208	3200	2900	4500	108	10.0	74	93
160	631	1623	3.1	1.9	C612_0250 EZ815U	1650	2900	24.93	5185/208	3200	2900	4500	171	10.0	74	106
176	554	961	3.0	2.1	C612_0230 EZ813U	1380	2600	22.67	68/3	3200	2900	4500	111	10.0	74	93
176	574	1476	3.1	2.0	C612_0230 EZ815U	1380	2600	22.67	68/3	3200	2900	4500	174	10.0	74	106
204	479	831	2.9	2.3	C612_0195 EZ813U	1650	2560	19.61	549/28	3200	2900	4500	110	10.0	74	93
204	497	1277	3.0	2.3	C612_0195 EZ815U	1650	2560	19.61	549/28	3200	2900	4500	173	10.0	74	106
227	430	746	2.9	2.5	C612_0175 EZ813U	1380	2600	17.60	88/5	3000	2600	4000	115	10.0	74	93
227	446	1146	3.0	2.4	C612_0175 EZ815U	1380	2600	17.60	88/5	3000	2600	4000	178	10.0	74	106
247	396	687	2.8	2.7	C612_0160 EZ813U	1650	2900	16.20	1037/64	3200	2900	4500	112	10.0	74	93
247	410	1055	2.9	2.6	C612_0160 EZ815U	1650	2900	16.20	1037/64	3200	2900	4500	175	10.0	74	106
283	346	600	2.7	2.9	C612_0140 EZ813U	1380	2600	14.15	976/69	3000	2600	4000	118	10.0	74	93
283	358	921	2.8	2.8	C612_0140 EZ815U	1380	2600	14.15	976/69	3000	2600	4000	181	10.0	74	106
318	308	533	2.7	3.1	C612_0125 EZ813U	1650	2900	12.58	2013/160	3000	2600	4000	115	10.0	74	93
318	319	819	2.8	3.0	C612_0125 EZ815U	1650	2900	12.58	2013/160	3000	2600	4000	178	10.0	74	106
396	247	429	2.6	3.6	C612_0100 EZ813U	1373	2900	10.11	3721/368	3000	2600	4000	119	10.0	74	93
396	256	658	2.7	3.5	C612_0100 EZ815U	1650	2900	10.11	3721/368	3000	2600	4000	182	10.0	74	106
C6 (n_{1N} = 4500 min^{-1}, $M_{2acc,max}$ = 1650 Nm)																
42	1243	2054	2.8	1.0	C613_1070 EZ703U	1380	2600	107.4	752/7	3200	2900	4500	22	10.0	74	78
46	1129	1867	2.6	1.2	C613_0980 EZ703U	1650	2900	97.63	243695/2496	3200	2900	4500	22	10.0	74	78
51	1027	1697	2.5	1.3	C613_0890 EZ703U	1380	2600	88.78	799/9	3200	2900	4500	23	10.0	74	78
59	888	1468	2.4	1.4	C613_0770 EZ703U	1650	2560	76.80	8601/112	3200	2900	4500	22	10.0	74	78

n_{2N} [rpm]	M_{2N} [Nm]	$M_{2,0}$ [Nm]	a_{th}	S	Type	M_{2acc} [Nm]	M_{2NOT} [Nm]	i	i_{exakt}	n_{1maxDB} EL1,2,3,4 [rpm]	n_{1maxDB} EL5,6 [rpm]	n_{1maxZB} [rpm]	J_1 [kgcm²]	$\Delta\varphi_2$ [arcmin]	C_2 [Nm/arcmin]	m [kg]
C6 (n_{1N} = 4500 min^{-1}, $M_{2acc,max}$ = 1650 Nm)																
65	809	1336	2.2	1.6	C612_0690 EZ703U	1380	2289	68.89	620/9	3200	2900	4500	23	10.0	74	70
71	734	1213	2.3	1.6	C613_0630 EZ703U	1650	2296	63.46	48739/768	3200	2900	4500	23	10.0	74	78
82	647	1069	2.0	2.0	C612_0550 EZ703U	1380	2230	55.11	496/9	3200	2900	4500	23	10.0	74	70
91	570	942	2.2	2.0	C613_0490 EZ703U	1545	1931	49.28	31537/640	3200	2900	4500	23	10.0	74	78
99	532	879	1.8	2.4	C612_0450 EZ703U	1380	1992	45.33	136/3	3200	2900	4500	24	10.0	74	70
99	721	1319	2.5	1.8	C612_0450 EZ705U	1380	2600	45.33	136/3	3200	2900	4500	36	10.0	74	75
114	462	764	1.8	2.6	C612_0390 EZ703U	1276	1595	39.40	1891/48	3200	2900	4500	23	10.0	74	70
129	409	677	1.6	3.2	C612_0350 EZ703U	1376	1720	34.87	1360/39	3200	2900	4500	25	10.0	74	70
129	555	1015	2.2	2.3	C612_0350 EZ705U	1380	2600	34.87	1360/39	3200	2900	4500	38	10.0	74	75
139	380	629	1.8	3.0	C612_0320 EZ703U	1139	1424	32.41	1037/32	3200	2900	4500	24	10.0	74	70
139	516	943	2.1	2.5	C612_0320 EZ705U	1650	2900	32.41	1037/32	3200	2900	4500	36	10.0	74	75
164	322	532	1.5	3.7	C612_0270 EZ703U	1277	1597	27.43	192/7	3200	2900	4500	27	10.0	74	70
164	436	798	2.1	2.8	C612_0270 EZ705U	1380	2600	27.43	192/7	3200	2900	4500	39	10.0	74	75
181	293	484	1.8	3.4	C612_0250 EZ703U	984	1230	24.93	5185/208	3200	2900	4500	25	10.0	74	70
181	397	725	2.0	2.9	C612_0250 EZ705U	1650	2900	24.93	5185/208	3200	2900	4500	38	10.0	74	75
199	361	660	2.0	3.1	C612_0230 EZ705U	1380	2600	22.67	68/3	3200	2900	4500	41	10.0	74	75
230	230	380	1.7	4.0	C612_0195 EZ703U	913	1141	19.61	549/28	3200	2900	4500	27	10.0	74	70
230	312	571	2.0	3.4	C612_0195 EZ705U	1650	2560	19.61	549/28	3200	2900	4500	39	10.0	74	75
278	258	472	1.9	3.9	C612_0160 EZ705U	1635	2296	16.20	1037/64	3200	2900	4500	41	10.0	74	75
C7 (n_{1N} = 2000 min^{-1}, $M_{2acc,max}$ = 2760 Nm)																
39	1895	2126	3.5	1.3	C713_0510 EZ813U	2760	4797	50.85	18711/368	3100	2900	4500	107	10.0	122	141
43	1771	1986	4.1	1.1	C712_0470 EZ813U	2300	4000	46.82	515/11	3100	2900	4500	109	10.0	122	128
49	1551	1740	3.7	1.4	C712_0410 EZ813U	2514	4006	41.02	2625/64	3100	2900	4500	108	10.0	122	128
57	1326	1487	3.6	1.5	C712_0350 EZ813U	2300	4000	35.07	2700/77	3100	2900	4500	112	10.0	122	128
57	1964	2339	5.3	1.0	C712_0350 EZ815U	2300	4000	35.07	2700/77	3100	2900	4500	175	10.0	122	141
59	1278	1434	2.9	1.9	C712_0340 EZ813U	2760	3710	33.80	2163/64	3100	2900	4500	109	10.0	122	128
59	1893	2254	4.3	1.3	C712_0340 EZ815U	2760	3710	33.80	2163/64	3100	2900	4500	172	10.0	122	141
70	1083	1215	3.2	1.8	C712_0290 EZ813U	2300	4000	28.64	315/11	3100	2900	4500	115	10.0	122	128
70	1604	1910	4.8	1.2	C712_0290 EZ815U	2300	4000	28.64	315/11	3100	2900	4500	178	10.0	122	141
79	957	1074	2.5	2.5	C712_0250 EZ813U	2536	3170	25.31	405/16	3100	2900	4500	112	10.0	122	128
79	1418	1688	3.8	1.7	C712_0250 EZ815U	2536	3170	25.31	405/16	3100	2900	4500	175	10.0	122	141
86	877	983	2.9	2.3	C712_0230 EZ813U	2300	4000	23.18	255/11	3100	2900	4500	119	10.0	122	128
86	1299	1546	4.3	1.5	C712_0230 EZ815U	2300	4000	23.18	255/11	3100	2900	4500	182	10.0	122	141
97	782	877	2.3	3.0	C712_0210 EZ813U	2760	4800	20.67	1323/64	3100	2900	4500	115	10.0	122	128
97	1158	1379	3.4	2.1	C712_0210 EZ815U	2760	4800	20.67	1323/64	3100	2900	4500	178	10.0	122	141
110	691	775	2.6	2.9	C712_0185 EZ813U	2300	4000	18.26	420/23	2900	2600	4000	125	10.0	122	128
110	1023	1218	3.8	2.0	C712_0185 EZ815U	2300	4000	18.26	420/23	2900	2600	4000	188	10.0	122	141
120	633	710	2.2	3.5	C712_0165 EZ813U	2272	4800	16.73	1071/64	3100	2900	4500	119	10.0	122	128
120	937	1116	3.3	2.4	C712_0165 EZ815U	2760	4800	16.73	1071/64	3100	2900	4500	183	10.0	122	141
146	519	582	2.2	3.9	C712_0135 EZ813U	1865	4000	13.73	4380/319	2900	2600	4000	134	10.0	122	128
146	769	916	3.3	2.6	C712_0135 EZ815U	2300	4000	13.73	4380/319	2900	2600	4000	197	10.0	122	141
152	499	559	2.2	4.1	C712_0130 EZ813U	1790	4797	13.18	4851/368	2900	2600	4000	126	10.0	122	128
152	738	879	3.2	2.8	C712_0130 EZ815U	2557	4797	13.18	4851/368	2900	2600	4000	189	10.0	122	141
170	445	499	2.1	4.4	C712_0120 EZ813U	1597	4000	11.76	1035/88	2600	2300	3500	140	10.0	122	128
170	659	784	3.1	3.0	C712_0120 EZ815U	2282	4000	11.76	1035/88	2600	2300	3500	203	10.0	122	141
202	375	420	2.1	5.0	C712_0099 EZ813U	1346	3606	9.912	4599/464	2900	2600	4000	136	10.0	122	128
202	555	661	3.0	3.3	C712_0099 EZ815U	1923	3606	9.912	4599/464	2900	2600	4000	199	10.0	122	141
236	476	566	3.0	3.7	C712_0085 EZ815U	1647	3089	8.490	4347/512	2600	2300	3500	206	10.0	122	141
272	412	491	2.9	4.1	C712_0074 EZ815U	1427	2677	7.357	3480/473	2200	1900	2800	232	10.0	122	141
C7 (n_{1N} = 3000 min^{-1}, $M_{2acc,max}$ = 2760 Nm)																
13	1574	1766	1.7	1.3	C713_2230 EZ701U	2300	4000	222.5	29375/132	3100	2900	4500	9.2	10.0	122	114
16	1297	1455	1.5	1.5	C713_1830 EZ701U	2300	4000	183.4	24205/132	3100	2900	4500	9.3	10.0	122	114
22	972	1090	1.3	2.1	C713_1370 EZ701U	2300	4000	137.3	10575/77	3100	2900	4500	9.5	10.0	122	114
22	1576	1891	2.2	1.3	C713_1370 EZ702U	2300	4000	137.3	10575/77	3100	2900	4500	15	10.0	122	116
23	936	1050	1.3	2.1	C713_1320 EZ701U	2531	3710	132.4	33887/256	3100	2900	4500	9.3	10.0	122	114
23	1519	1822	2.1	1.3	C713_1320 EZ702U	2760	3710	132.4	33887/256	3100	2900	4500	15	10.0	122	116
30	701	787	1.2	2.7	C713_0990 EZ701U	1896	3170	99.14	6345/64	3100	2900	4500	9.5	10.0	122	114
30	1137	1365	2.0	1.6	C713_0990 EZ702U	2536	3170	99.14	6345/64	3100	2900	4500	15	10.0	122	116
30	1564	1971	2.7	1.2	C713_0990 EZ703U	2536	3170	99.14	6345/64	3100	2900	4500	23	10.0	122	118
37	573	642	1.2	3.1	C713_0810 EZ701U	1548	2821	80.97	20727/256	3100	2900	4500	9.7	10.0	122	114
37	929	1115	1.9	1.9	C713_0810 EZ702U	2257	2821	80.97	20727/256	3100	2900	4500	15	10.0	122	116
37	1277	1610	2.6	1.4	C713_0810 EZ703U	2257	2821	80.97	20727/256	3100	2900	4500	23	10.0	122	118
43	499	560	1.0	4.0	C712_0700 EZ701U	1349	2646	69.55	765/11	3100	2900	4500	11	10.0	122	101
43	810	971	1.6	2.5	C712_0700 EZ702U	2116	2646	69.55	765/11	3100	2900	4500	16	10.0	122	103

n_{2N} [rpm]	M_{2N} [Nm]	$M_{2,0}$ [Nm]	a_{th}	S	Type	M_{2acc} [Nm]	M_{2NOT} [Nm]	i	i_{exakt}	n_{1maxDB} EL1,2,3,4 [rpm]	n_{1maxDB} EL5,6 [rpm]	n_{1maxZB} [rpm]	J_1 [kgcm²]	$\Delta\varphi_2$ [arcmin]	C_2 [Nm/arcmin]	m [kg]
C7 (n_{1N} = 3000 min^{-1}, $M_{2acc,max}$ = 2760 Nm)																
43	1113	1403	2.1	1.8	C712_0700 EZ703U	2116	2646	69.55	765/11	3100	2900	4500	24	10.0	122	105
53	408	457	0.9	4.7	C712_0570 EZ701U	1102	2374	56.82	625/11	3100	2900	4500	12	10.0	122	101
53	661	794	1.5	2.9	C712_0570 EZ702U	1899	2374	56.82	625/11	3100	2900	4500	17	10.0	122	103
53	909	1146	2.0	2.1	C712_0570 EZ703U	1899	2374	56.82	625/11	3100	2900	4500	25	10.0	122	105
53	1174	1664	2.5	1.7	C712_0570 EZ705U	2300	4000	56.82	625/11	3100	2900	4500	37	10.0	122	111
64	967	1371	2.3	2.1	C712_0470 EZ705U	2300	4000	46.82	515/11	3100	2900	4500	39	10.0	122	111
73	294	330	1.1	4.7	C712_0410 EZ701U	796	1714	41.02	2625/64	3100	2900	4500	12	10.0	122	101
73	477	573	1.7	2.9	C712_0410 EZ702U	1371	1714	41.02	2625/64	3100	2900	4500	17	10.0	122	103
73	656	828	2.4	2.1	C712_0410 EZ703U	1371	1714	41.02	2625/64	3100	2900	4500	25	10.0	122	105
73	847	1202	2.0	2.5	C712_0410 EZ705U	2514	4006	41.02	2625/64	3100	2900	4500	37	10.0	122	111
86	408	490	1.4	3.8	C712_0350 EZ702U	1395	1958	35.07	2700/77	3100	2900	4500	21	10.0	122	103
86	561	707	1.9	2.8	C712_0350 EZ703U	1566	1958	35.07	2700/77	3100	2900	4500	29	10.0	122	105
86	724	1027	2.0	2.8	C712_0350 EZ705U	2300	4000	35.07	2700/77	3100	2900	4500	42	10.0	122	111
89	698	990	1.6	3.4	C712_0340 EZ705U	2760	3710	33.80	2163/64	3100	2900	4500	39	10.0	122	111
105	592	839	1.8	3.4	C712_0290 EZ705U	2300	3908	28.64	315/11	3100	2900	4500	44	10.0	122	111
119	295	354	1.7	3.8	C712_0250 EZ702U	1007	1413	25.31	405/16	3100	2900	4500	22	10.0	122	103
119	405	511	2.3	2.8	C712_0250 EZ703U	1131	1413	25.31	405/16	3100	2900	4500	29	10.0	122	105
119	523	742	1.5	4.2	C712_0250 EZ705U	2536	3170	25.31	405/16	3100	2900	4500	42	10.0	122	111
129	479	679	1.6	4.2	C712_0230 EZ705U	2300	3770	23.18	255/11	3100	2900	4500	48	10.0	122	111
145	427	606	1.4	4.9	C712_0210 EZ705U	2085	2821	20.67	1323/64	3100	2900	4500	45	10.0	122	111
C7 (n_{1N} = 4000 min^{-1}, $M_{2acc,max}$ = 2760 Nm)																
41	2352	4079	3.2	1.0	C713_0980 EZ813U	2536	3170	97.63	10935/112	3100	2900	4500	107	10.0	122	141
50	1921	3331	2.9	1.2	C713_0800 EZ813U	2760	4800	79.73	5103/64	3100	2900	4500	107	10.0	122	141
50	1990	5118	3.0	1.2	C713_0800 EZ815U	2760	4800	79.73	5103/64	3100	2900	4500	170	10.0	122	154
62	1555	2697	2.6	1.5	C713_0650 EZ813U	2760	4800	64.55	4131/64	3100	2900	4500	107	10.0	122	141
62	1611	4143	2.7	1.5	C713_0650 EZ815U	2760	4800	64.55	4131/64	3100	2900	4500	170	10.0	122	154
70	1389	2408	2.9	1.4	C712_0570 EZ813U	2300	4000	56.82	625/11	3100	2900	4500	108	10.0	122	128
70	1439	3700	3.1	1.4	C712_0570 EZ815U	2300	4000	56.82	625/11	3100	2900	4500	171	10.0	122	141
79	1225	2124	2.4	1.9	C713_0510 EZ813U	2760	4797	50.85	18711/368	3100	2900	4500	107	10.0	122	141
79	1269	3264	2.4	1.8	C713_0510 EZ815U	2760	4797	50.85	18711/368	3100	2900	4500	171	10.0	122	154
85	1144	1985	2.7	1.7	C712_0470 EZ813U	2300	4000	46.82	515/11	3100	2900	4500	109	10.0	122	128
85	1186	3049	2.8	1.7	C712_0470 EZ815U	2300	4000	46.82	515/11	3100	2900	4500	172	10.0	122	141
98	1003	1739	2.4	2.1	C712_0410 EZ813U	2514	4006	41.02	2625/64	3100	2900	4500	108	10.0	122	128
98	1039	2671	2.5	2.0	C712_0410 EZ815U	2514	4006	41.02	2625/64	3100	2900	4500	171	10.0	122	141
114	857	1486	2.3	2.3	C712_0350 EZ813U	2300	4000	35.07	2700/77	3100	2900	4500	112	10.0	122	128
114	888	2284	2.4	2.3	C712_0350 EZ815U	2300	4000	35.07	2700/77	3100	2900	4500	175	10.0	122	141
118	826	1433	2.0	2.7	C712_0340 EZ813U	2760	3710	33.80	2163/64	3100	2900	4500	109	10.0	122	128
118	856	2201	2.1	2.6	C712_0340 EZ815U	2760	3710	33.80	2163/64	3100	2900	4500	172	10.0	122	141
140	700	1214	2.1	2.9	C712_0290 EZ813U	2300	4000	28.64	315/11	3100	2900	4500	115	10.0	122	128
140	725	1865	2.2	2.8	C712_0290 EZ815U	2300	4000	28.64	315/11	3100	2900	4500	178	10.0	122	141
158	619	1073	2.0	3.3	C712_0250 EZ813U	2536	3170	25.31	405/16	3100	2900	4500	112	10.0	122	128
158	641	1649	2.0	3.1	C712_0250 EZ815U	2536	3170	25.31	405/16	3100	2900	4500	175	10.0	122	141
173	567	983	1.9	3.5	C712_0230 EZ813U	2300	4000	23.18	255/11	3100	2900	4500	119	10.0	122	128
173	587	1510	2.0	3.3	C712_0230 EZ815U	2300	4000	23.18	255/11	3100	2900	4500	182	10.0	122	141
193	505	876	1.9	3.7	C712_0210 EZ813U	2760	4800	20.67	1323/64	3100	2900	4500	115	10.0	122	128
193	524	1346	2.0	3.6	C712_0210 EZ815U	2760	4800	20.67	1323/64	3100	2900	4500	178	10.0	122	141
219	446	774	1.8	4.1	C712_0185 EZ813U	2300	4000	18.26	420/23	2900	2600	4000	125	10.0	122	128
219	462	1189	1.9	3.9	C712_0185 EZ815U	2300	4000	18.26	420/23	2900	2600	4000	188	10.0	122	141
239	409	709	1.8	4.3	C712_0165 EZ813U	2272	4800	16.73	1071/64	3100	2900	4500	119	10.0	122	128
239	424	1090	1.9	4.1	C712_0165 EZ815U	2760	4800	16.73	1071/64	3100	2900	4500	183	10.0	122	141
291	336	582	1.8	4.9	C712_0135 EZ813U	1865	4000	13.73	4380/319	2900	2600	4000	134	10.0	122	128
291	348	894	1.8	4.7	C712_0135 EZ815U	2300	4000	13.73	4380/319	2900	2600	4000	197	10.0	122	141
303	334	858	1.8	4.9	C712_0130 EZ815U	2557	4797	13.18	4851/368	2900	2600	4000	189	10.0	122	141
C7 (n_{1N} = 4500 min^{-1}, $M_{2acc,max}$ = 2760 Nm)																
33	1589	2626	2.2	1.3	C713_1370 EZ703U	2300	4000	137.3	10575/77	3100	2900	4500	23	10.0	122	118
34	1531	2531	2.5	1.1	C713_1320 EZ703U	2760	3710	132.4	33887/256	3100	2900	4500	22	10.0	122	118
45	1147	1896	2.3	1.4	C713_0990 EZ703U	2536	3170	99.14	6345/64	3100	2900	4500	23	10.0	122	118
56	937	1548	2.2	1.6	C713_0810 EZ703U	2257	2821	80.97	20727/256	3100	2900	4500	23	10.0	122	118
65	816	1349	1.6	2.5	C712_0700 EZ703U	2116	2646	69.55	765/11	3100	2900	4500	24	10.0	122	105
79	667	1102	1.5	2.8	C712_0570 EZ703U	1899	2374	56.82	625/11	3100	2900	4500	25	10.0	122	105
79	904	1653	1.9	2.2	C712_0570 EZ705U	2300	4000	56.82	625/11	3100	2900	4500	37	10.0	122	111
96	745	1362	1.7	2.7	C712_0470 EZ705U	2300	4000	46.82	515/11	3100	2900	4500	39	10.0	122	111
110	481	796	1.8	2.8	C712_0410 EZ703U	1371	1714	41.02	2625/64	3100	2900	4500	25	10.0	122	105
110	652	1194	1.6	3.2	C712_0410 EZ705U	2514	4006	41.02	2625/64	3100	2900	4500	37	10.0	122	111

n_{2N} [rpm]	M_{2N} [Nm]	$M_{2,0}$ [Nm]	a_{th}	S	Type	M_{2acc} [Nm]	M_{2NOT} [Nm]	i	i_{exakt}	n_{1maxDB} EL1,2,3,4 [rpm]	n_{1maxDB} EL5,6 [rpm]	n_{1maxZB} [rpm]	J_1 [kgcm²]	$\Delta\varphi_2$ [arcmin]	C_2 [Nm/arcmin]	m [kg]
C7 (n_{1N} = 4500 min^{-1}, $M_{2acc,max}$ = 2760 Nm)																
128	412	680	1.4	3.8	C712_0350 EZ703U	1566	1958	35.07	2700/77	3100	2900	4500	29	10.0	122	105
128	558	1020	1.5	3.6	C712_0350 EZ705U	2300	4000	35.07	2700/77	3100	2900	4500	42	10.0	122	111
133	538	983	1.4	4.0	C712_0340 EZ705U	2760	3710	33.80	2163/64	3100	2900	4500	39	10.0	122	111
157	456	833	1.4	4.4	C712_0290 EZ705U	2300	3908	28.64	315/11	3100	2900	4500	44	10.0	122	111
178	297	491	1.7	3.8	C712_0250 EZ703U	1131	1413	25.31	405/16	3100	2900	4500	29	10.0	122	105
178	403	737	1.3	4.8	C712_0250 EZ705U	2536	3170	25.31	405/16	3100	2900	4500	42	10.0	122	111
C8 (n_{1N} = 2000 min^{-1}, $M_{2acc,max}$ = 4800 Nm)																
20	3746	4202	3.0	1.1	C813_1010 EZ813U	4800	7453	100.5	28143/280	2900	2700	4300	107	10.0	204	200
22	3334	3739	3.3	1.1	C813_0890 EZ813U	4140	7200	89.44	14400/161	2900	2700	4300	108	10.0	204	200
26	2912	3266	2.8	1.4	C813_0780 EZ813U	4800	6759	78.13	54693/700	2900	2700	4300	108	10.0	204	200
29	2605	2922	3.0	1.4	C812_0690 EZ813U	4140	6652	68.89	620/9	2900	2700	4300	110	10.0	204	188
30	2459	2758	2.7	1.5	C813_0660 EZ813U	4800	6222	65.96	10620/161	2900	2700	4300	108	10.0	204	200
30	3642	4336	4.0	1.0	C813_0660 EZ815U	4800	6222	65.96	10620/161	2900	2700	4300	171	10.0	204	213
37	2048	2297	2.6	1.8	C812_0540 EZ813U	4140	6248	54.15	704/13	2900	2700	4300	113	10.0	204	188
37	3034	3612	3.9	1.2	C812_0540 EZ815U	4140	6248	54.15	704/13	2900	2700	4300	176	10.0	204	200
41	1833	2056	2.5	1.9	C813_0490 EZ813U	3710	4638	49.18	49914/1015	2900	2700	4300	110	10.0	204	200
41	2715	3233	3.8	1.3	C813_0490 EZ815U	3710	4638	49.18	49914/1015	2900	2700	4300	173	10.0	204	213
44	1722	1932	2.4	2.1	C812_0460 EZ813U	4140	7200	45.54	592/13	2900	2700	4300	116	10.0	204	188
44	2551	3037	3.6	1.4	C812_0460 EZ815U	4140	7200	45.54	592/13	2900	2700	4300	179	10.0	204	200
50	1510	1694	2.2	2.4	C812_0400 EZ813U	3686	4608	39.94	2596/65	2900	2700	4300	113	10.0	145	188
50	2237	2664	3.3	1.6	C812_0400 EZ815U	3686	4608	39.94	2596/65	2900	2700	4300	176	10.0	145	200
57	1336	1499	2.1	2.7	C812_0350 EZ813U	4140	7200	35.33	106/3	2900	2700	4300	122	10.0	204	188
57	1979	2357	3.1	1.8	C812_0350 EZ815U	4140	7200	35.33	106/3	2900	2700	4300	185	10.0	204	200
60	1270	1425	1.8	3.3	C812_0340 EZ813U	4561	8400	33.59	2183/65	2900	2700	4300	117	10.0	145	188
60	1881	2240	2.6	2.2	C812_0340 EZ815U	4800	8400	33.59	2183/65	2900	2700	4300	180	10.0	145	200
73	1039	1165	1.9	3.5	C812_0270 EZ813U	3730	7200	27.47	412/15	2900	2700	4300	130	10.0	204	188
73	1539	1832	2.8	2.3	C812_0270 EZ815U	4140	7200	27.47	412/15	2900	2700	4300	193	10.0	204	200
77	986	1105	1.6	4.2	C812_0260 EZ813U	3539	7453	26.06	3127/120	2900	2700	4300	123	10.0	145	188
77	1460	1738	2.3	2.9	C812_0260 EZ815U	4800	7453	26.06	3127/120	2900	2700	4300	186	10.0	145	200
86	877	984	1.7	4.1	C812_0230 EZ813U	3149	7200	23.19	1600/69	2900	2700	4300	138	10.0	204	188
86	1299	1547	2.5	2.8	C812_0230 EZ815U	4140	7200	23.19	1600/69	2900	2700	4300	201	10.0	204	200
99	1135	1351	2.2	3.4	C812_0200 EZ815U	3930	6759	20.26	6077/300	2900	2700	4300	195	10.0	145	200
116	968	1153	2.2	3.7	C812_0175 EZ815U	3354	6289	17.29	1504/87	2700	2400	3800	218	10.0	204	200
117	958	1141	2.2	3.8	C812_0170 EZ815U	3318	6222	17.10	1180/69	2900	2700	4300	203	10.0	145	200
145	771	918	2.1	4.4	C812_0140 EZ815U	2670	5008	13.76	1280/93	2700	2400	3800	237	10.0	204	200
157	714	850	2.1	4.6	C812_0125 EZ815U	2473	4638	12.75	5546/435	2700	2400	3800	221	10.0	145	200
C8 (n_{1N} = 3000 min^{-1}, $M_{2acc,max}$ = 4140 Nm)																
11	1909	2141	1.1	1.8	C813_2700 EZ701U	4140	6652	269.8	7285/27	2900	2700	4300	9.4	10.0	204	173
11	3095	3714	1.9	1.1	C813_2700 EZ702U	4140	6652	269.8	7285/27	2900	2700	4300	15	10.0	204	175
14	1501	1683	1.1	2.2	C813_2120 EZ701U	4055	6248	212.1	8272/39	2900	2700	4300	9.6	10.0	204	173
14	2433	2920	1.7	1.4	C813_2120 EZ702U	4140	6248	212.1	8272/39	2900	2700	4300	15	10.0	204	175
17	1262	1415	1.0	2.5	C813_1780 EZ701U	3410	5251	178.4	6956/39	2900	2700	4300	9.8	10.0	204	173
17	2046	2455	1.6	1.6	C813_1780 EZ702U	4140	5251	178.4	6956/39	2900	2700	4300	15	10.0	204	175
17	2813	3547	2.3	1.1	C813_1780 EZ703U	4140	5251	178.4	6956/39	2900	2700	4300	23	10.0	204	177
22	979	1098	0.9	3.1	C813_1380 EZ701U	2646	4648	138.4	2491/18	2900	2700	4300	10	10.0	204	173
22	1588	1905	1.5	1.9	C813_1380 EZ702U	3718	4648	138.4	2491/18	2900	2700	4300	15	10.0	204	175
22	2183	2752	2.1	1.4	C813_1380 EZ703U	3718	4648	138.4	2491/18	2900	2700	4300	23	10.0	204	177
28	761	854	0.9	3.8	C813_1080 EZ701U	2057	4214	107.6	4841/45	2900	2700	4300	11	10.0	204	173
28	1234	1481	1.4	2.3	C813_1080 EZ702U	3371	4214	107.6	4841/45	2900	2700	4300	16	10.0	204	175
28	1697	2139	1.9	1.7	C813_1080 EZ703U	3371	4214	107.6	4841/45	2900	2700	4300	24	10.0	204	177
33	643	721	0.8	4.3	C813_0910 EZ701U	1736	3558	90.82	18800/207	2900	2700	4300	11	10.0	204	173
33	1042	1250	1.4	2.6	C813_0910 EZ702U	2846	3558	90.82	18800/207	2900	2700	4300	16	10.0	204	175
33	1433	1806	1.9	1.9	C813_0910 EZ703U	2846	3558	90.82	18800/207	2900	2700	4300	24	10.0	204	177
38	561	630	1.0	3.8	C813_0790 EZ701U	1517	3108	79.34	285619/3600	2900	2700	4300	11	10.0	204	173
38	910	1092	1.6	2.3	C813_0790 EZ702U	2486	3108	79.34	285619/3600	2900	2700	4300	16	10.0	204	175
38	1251	1578	2.3	1.7	C813_0790 EZ703U	2486	3108	79.34	285619/3600	2900	2700	4300	24	10.0	204	177
C8 (n_{1N} = 4000 min^{-1}, $M_{2acc,max}$ = 4800 Nm)																
29	3283	5694	2.7	1.1	C813_1360 EZ813U	4140	7200	136.3	954/7	2900	2700	4300	107	10.0	204	200
29	3402	8748	2.8	1.1	C813_1360 EZ815U	4140	7200	136.3	954/7	2900	2700	4300	170	10.0	204	213
31	3121	5412	2.7	1.1	C813_1300 EZ813U	4800	8400	129.5	58941/455	2900	2700	4300	107	10.0	204	200
31	3233	8315	2.8	1.1	C813_1300 EZ815U	4800	8400	129.5	58941/455	2900	2700	4300	170	10.0	204	213
38	2552	4426	2.3	1.4	C813_1060 EZ813U	4140	7200	105.9	3708/35	2900	2700	4300	108	10.0	204	200
38	2644	6800	2.4	1.4	C813_1060 EZ815U	4140	7200	105.9	3708/35	2900	2700	4300	171	10.0	204	213

n_{2N} [rpm]	M_{2N} [Nm]	$M_{2,0}$ [Nm]	a_{th}	S	Type	M_{2acc} [Nm]	M_{2NOT} [Nm]	i	i_{exakt}	n_{1maxDB} EL1,2,3,4 [rpm]	n_{1maxDB} EL5,6 [rpm]	n_{1maxZB} [rpm]	J_1 [kgcm²]	$\Delta\varphi_2$ [arcmin]	C_2 [Nm/ arcmin]	m [kg]
C8 (n_{1N} = 4000 min^{-1}, $M_{2acc,max}$ = 4800 Nm)																
40	2421	4199	2.5	1.4	C813_1010 EZ813U	4800	7453	100.5	28143/280	2900	2700	4300	107	10.0	204	200
40	2509	6451	2.6	1.3	C813_1010 EZ815U	4800	7453	100.5	28143/280	2900	2700	4300	170	10.0	204	213
45	2155	3737	2.2	1.7	C813_0890 EZ813U	4140	7200	89.44	14400/161	2900	2700	4300	108	10.0	204	200
45	2233	5741	2.2	1.6	C813_0890 EZ815U	4140	7200	89.44	14400/161	2900	2700	4300	171	10.0	204	213
51	1882	3264	2.3	1.7	C813_0780 EZ813U	4800	6759	78.13	54693/700	2900	2700	4300	108	10.0	204	200
51	1950	5015	2.4	1.6	C813_0780 EZ815U	4800	6759	78.13	54693/700	2900	2700	4300	171	10.0	204	213
58	1684	2920	1.9	2.1	C812_0690 EZ813U	4140	6652	68.89	620/9	2900	2700	4300	110	10.0	204	188
58	1745	4486	2.0	2.1	C812_0690 EZ815U	4140	6652	68.89	620/9	2900	2700	4300	173	10.0	204	200
61	1589	2756	2.2	1.9	C813_0660 EZ813U	4800	6222	65.96	10620/161	2900	2700	4300	108	10.0	204	200
61	1647	4234	2.3	1.8	C813_0660 EZ815U	4800	6222	65.96	10620/161	2900	2700	4300	171	10.0	204	213
74	1324	2296	1.7	2.7	C812_0540 EZ813U	4140	6248	54.15	704/13	2900	2700	4300	113	10.0	204	188
74	1372	3527	1.8	2.6	C812_0540 EZ815U	4140	6248	54.15	704/13	2900	2700	4300	176	10.0	204	200
81	1185	2054	2.1	2.3	C813_0490 EZ813U	3710	4638	49.18	49914/1015	2900	2700	4300	110	10.0	204	200
81	1227	3156	2.1	2.3	C813_0490 EZ815U	3710	4638	49.18	49914/1015	2900	2700	4300	173	10.0	204	213
88	1113	1930	1.6	3.2	C812_0460 EZ813U	4140	7200	45.54	592/13	2900	2700	4300	116	10.0	204	188
88	1153	2966	1.6	3.1	C812_0460 EZ815U	4140	7200	45.54	592/13	2900	2700	4300	179	10.0	204	200
100	976	1693	1.4	3.8	C812_0400 EZ813U	3686	4608	39.94	2596/65	2900	2700	4300	113	10.0	145	188
100	1011	2601	1.5	3.6	C812_0400 EZ815U	3686	4608	39.94	2596/65	2900	2700	4300	176	10.0	145	200
113	864	1498	1.4	4.2	C812_0350 EZ813U	4140	7200	35.33	106/3	2900	2700	4300	122	10.0	204	188
113	895	2301	1.4	4.0	C812_0350 EZ815U	4140	7200	35.33	106/3	2900	2700	4300	185	10.0	204	200
119	821	1424	1.3	4.4	C812_0340 EZ813U	4561	8400	33.59	2183/65	2900	2700	4300	117	10.0	145	188
119	851	2187	1.4	4.2	C812_0340 EZ815U	4800	8400	33.59	2183/65	2900	2700	4300	180	10.0	145	200
146	696	1789	1.3	4.8	C812_0270 EZ815U	4140	7200	27.47	412/15	2900	2700	4300	193	10.0	204	200
C9 (n_{1N} = 2000 min^{-1}, $M_{2acc,max}$ = 6500 Nm)																
18	4116	4617	2.4	1.5	C913_1100 EZ813U	6500	9997	110.4	21645/196	2800	2600	4000	110	10.0	393	307
26	2897	3249	2.6	1.6	C913_0780 EZ813U	5630	7037	77.73	60939/784	2800	2600	4000	110	10.0	393	307
26	4291	5109	3.9	1.1	C913_0780 EZ815U	5630	7037	77.73	60939/784	2800	2600	4000	173	10.0	393	320
C9 (n_{1N} = 4000 min^{-1}, $M_{2acc,max}$ = 6500 Nm)																
19	5188	8997	2.2	1.1	C913_2150 EZ813U	6500	12000	215.4	3015/14	2800	2600	4000	108	10.0	393	307
19	5376	13823	2.3	1.1	C913_2150 EZ815U	6500	12000	215.4	3015/14	2800	2600	4000	171	10.0	393	320
23	4242	7357	2.0	1.3	C913_1760 EZ813U	6500	12000	176.1	34515/196	2800	2600	4000	108	10.0	393	307
23	4396	11303	2.1	1.3	C913_1760 EZ815U	6500	12000	176.1	34515/196	2800	2600	4000	171	10.0	393	320
36	2660	4614	1.8	1.9	C913_1100 EZ813U	6500	9997	110.4	21645/196	2800	2600	4000	110	10.0	393	307
36	2757	7088	1.8	1.9	C913_1100 EZ815U	6500	9997	110.4	21645/196	2800	2600	4000	173	10.0	393	320
51	1873	3247	2.1	1.9	C913_0780 EZ813U	5630	7037	77.73	60939/784	2800	2600	4000	110	10.0	393	307
51	1940	4989	2.2	1.9	C913_0780 EZ815U	5630	7037	77.73	60939/784	2800	2600	4000	173	10.0	393	320

7.3 Dimensional drawings

In this chapter you can find the dimensions of the geared motors.

There is a dimensional drawing for every possible shaft/housing design, each with the tables for gearbox dimensions, motor dimensions and geared motor dimensions.

Dimensions can exceed the specifications of ISO 2768-mK due to casting tolerances or accumulation of individual tolerances.

We reserve the right to make dimensional changes due to ongoing technical development.

You can download 3D models of our standard drives at https://configurator.stoeber.de/en-US/.

Combination options and the dimensions of forced ventilated geared motors can also be found at https://configurator.stoeber.de/en-US/.

Tolerances

Axis height in accordance with DIN 747	Tolerance
Up to 50 mm	-0.4 mm
Up to 250 mm	-0.5 mm
Up to 630 mm	-0.6 mm

Solid shaft	Tolerance
Shaft ∅ fit ≤ 50 mm	DIN 748-1, ISO k6
Shaft ∅ fit > 50 mm	DIN 748-1, ISO m6
Feather keys	DIN 6885-1, high form A

Flange	Pilot tolerance
Up to 300 mm	ISO j6
Starting at 350 mm	ISO h6

Centering holes in solid shafts in accordance with DIN 332-2, DR shape

Thread size	M4	M5	M6	M8	M10	M12	M16	M20	M24
Thread depth [mm]	10	12.5	16	19	22	28	36	42	50

7.3.1 Solid shaft design with feather key, N housing design (foot)

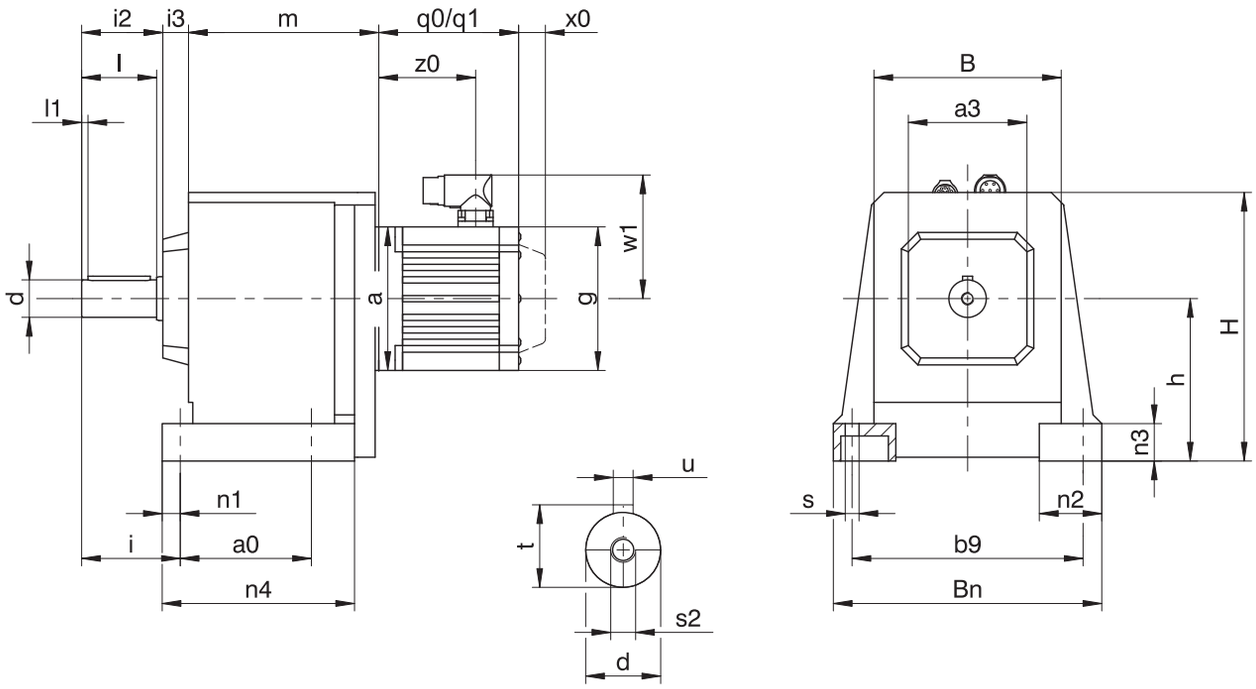

q0	Applies to motors without brake.	q1	Applies to motors with brake.
x0	EZ2: Applies only to motors with brake and encoders using an optical or inductive measuring method EZ3 – EZ8: Applies to encoders using an optical measuring method	w1	Different for the One Cable Solution (OCS), see the chapter [▷ 17.4]

C203, C303, C612, C613: Motor and gearbox are sometimes non-coaxial.

Options: C0 – C5 also available with solid shaft without feather key; on request starting at C6.

Dimensions of gearboxes

Type	a0	a3	b9	B	Bn	Ød	h	H	i	i2	i3	l	l1	n1	n2	n3	n4	Øs	s2	t	u
C0	62	60	110	92	132	20_{k6}	82	144	55	44	13	40	3	11	35	20	95.0	7	M6	22.5	A6×6×32
C1	70	80	150	124	176	25_{k6}	102	177	67	54	15	50	5	13	42	25	117.5	9	M10	28.0	A8×7×40
C2	85	95	170	138	200	30_{k6}	115	195	79	65	21	60	5	14	50	30	134.5	11	M10	33.0	A8×7×50
C3	105	95	185	150	215	30_{k6}	130	215	79	65	20	60	5	14	50	30	153.5	11	M10	33.0	A8×7×50
C4	110	110	220	175	255	40_{k6}	145	245	105	86	20	80	5	19	60	35	180.0	14	M16	43.0	A12×8×70
C5	130	130	245	192	290	40_{k6}	170	290	108	86	21	80	5	22	70	40	197.0	18	M16	43.0	A12×8×70
C6	215	177	245	225	300	50_{k6}	200	315	130	106	47	100	5	25	75	40	265.0	18	M16	53.5	A14×9×90
C7	235	192	300	265	365	60_{m6}	235	375	163	127	58	120	5	25	90	50	285.0	18	M20	64.0	A18×11×100
C8	300	223	340	310	435	70_{m6}	290	450	190	148	70	140	5	29	95	55	360.0	22	M20	74.5	A20×12×125
C9	340	277	400	365	510	90_{m6}	340	530	222	178	78	170	5	34	110	60	410.0	26	M24	95.0	A25×14×140

Dimensions of motors

Type	□g	q0	q1	w1	x0	z0
EZ203U	55	166.0	175.0	47.0	25	111.0
EZ301U	72	114.0	154.0	55.5	21	78.5
EZ302U	72	136.0	176.0	55.5	21	100.5
EZ303U	72	158.0	198.0	55.5	21	122.5
EZ401U	98	118.5	167.0	91.0	22	76.5
EZ402U	98	143.5	192.0	91.0	22	101.5
EZ404U	98	193.5	242.0	91.0	22	151.5
EZ501U	115	112.0	166.5	100.0	22	77.5
EZ502U	115	137.0	191.5	100.0	22	102.5
EZ503U	115	162.0	216.5	100.0	22	127.5
EZ505U	115	212.0	266.5	100.0	22	177.5
EZ701U	145	125.0	184.0	115.0	22	87.0
EZ702U	145	150.0	209.0	115.0	22	112.0
EZ703U	145	175.0	234.0	115.0	22	137.0
EZ705U	145	230.0	289.0	134.0	22	188.0
EZ813U	190	273.5	350.5	156.5	22	219.5
EZ815U	190	355.5	432.5	156.5	22	301.5

Dimensions of geared motors

Type	EZ2		EZ3		EZ4		EZ5		EZ7		EZ8	
	a	m	a	m	a	m	a	m	a	m	a	m
C002	□55	97.5	□72	97.5	□98	97.5	□115	101.5	□145	103.5	–	–
C102	–	–	□72	118.0	□98	118.0	□115	122.0	□145	124.0	–	–
C103	–	–	∅140	155.0	–	–	–	–	–	–	–	–
C202	–	–	∅140	129.0	∅140	129.0	□115	133.0	□145	135.0	–	–
C203	–	–	∅140	166.0	∅140	166.0	–	–	–	–	–	–
C302	–	–	–	–	–	–	∅160	152.5	□145	154.5	□190	157.5
C303	–	–	∅140	185.5	∅140	185.5	∅160	195.5	–	–	–	–
C402	–	–	–	–	–	–	∅160	180.0	□145	182.0	□190	185.0
C403	–	–	–	–	–	–	∅160	223.0	–	–	–	–
C502	–	–	–	–	–	–	∅160	200.0	∅200	202.0	□190	205.0
C503	–	–	–	–	–	–	∅160	243.0	–	–	–	–
C612	–	–	–	–	–	–	–	–	∅200	180.0	□190	183.0
C613	–	–	–	–	–	–	∅160	222.0	∅200	242.0	–	–
C712	–	–	–	–	–	–	–	–	∅200	201.0	∅250	203.0
C713	–	–	–	–	–	–	–	–	∅200	262.0	∅250	274.0
C812	–	–	–	–	–	–	–	–	–	–	∅250	237.0
C813	–	–	–	–	–	–	–	–	∅200	296.0	∅250	308.0
C913	–	–	–	–	–	–	–	–	–	–	∅250	337.0

7.3.2 Solid shaft design with feather key, G housing design (pitch circle diameter)

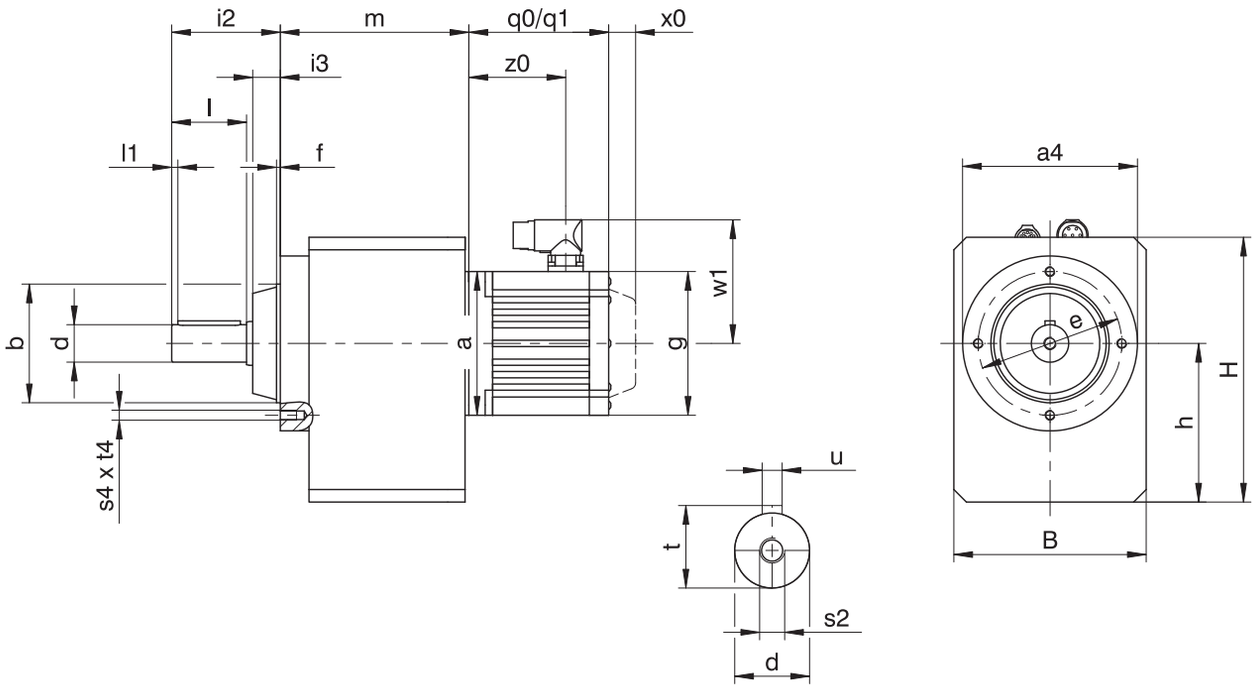

C1 – C4

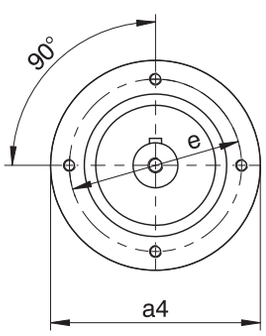

C5

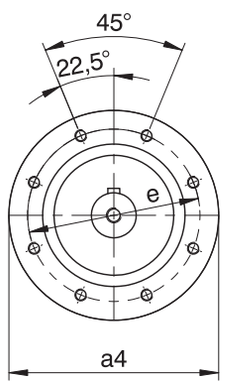

C6 – C9

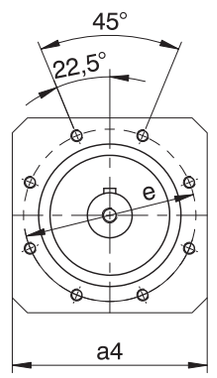

q0	Applies to motors without brake.	q1	Applies to motors with brake.
x0	EZ2: Applies only to motors with brake and encoders using an optical or inductive measuring method EZ3 – EZ8: Applies to encoders using an optical measuring method	w1	Different for the One Cable Solution (OCS), see the chapter [▶ 17.4]

C203, C303, C612, C613: Motor and gearbox are sometimes non-coaxial.

Options: C0 – C5 also available with solid shaft without feather key; on request starting at C6.

Dimensions of gearboxes

Type	a4	Øb	B	Ød	Øe	f	h	H	i2	i3	l	l1	s2	s4	t	t4	u
C0	∅87	55_{j6}	97	20_{k6}	75	3.0	79.0	141.0	58	14	40	3	M6	M6	22.5	10	A6×6×32
C1	∅120	80_{j6}	130	25_{k6}	100	3.0	100.0	175.0	71	17	50	5	M10	M6	28.0	13	A8×7×40
C2	∅140	95_{j6}	142	30_{k6}	115	3.0	112.0	192.0	87	22	60	5	M10	M8	33.0	13	A8×7×50
C3	∅140	95_{j6}	154	30_{k6}	115	3.0	127.0	212.0	87	22	60	5	M10	M8	33.0	13	A8×7×50
C4	∅160	110_{j6}	178	40_{k6}	130	3.5	142.5	242.5	108	22	80	5	M16	M10	43.0	16	A12×8×70
C5	∅192	130_{j6}	195	40_{k6}	165	3.5	166.0	286.0	109	23	80	5	M16	M10	43.0	16	A12×8×70
C6	□180	140_{j6}	225	50_{k6}	165	5.0	195.0	310.0	136	30	100	5	M16	M10	53.5	16	A14×9×90
C7	□195	155_{j6}	265	60_{m6}	185	8.0	231.0	371.0	164	37	120	5	M20	M12	64.0	19	A18×11×100
C8	□226	185_{j6}	310	70_{m6}	215	5.0	285.0	445.0	185	37	140	5	M20	M12	74.5	19	A20×12×125
C9	□280	230_{j6}	365	90_{m6}	265	5.0	334.0	524.0	220	42	170	5	M24	M16	95.0	26	A25×14×140

Dimensions of motors

Type	□g	q0	q1	w1	x0	z0
EZ203U	55	166.0	175.0	47.0	25	111.0
EZ301U	72	114.0	154.0	55.5	21	78.5
EZ302U	72	136.0	176.0	55.5	21	100.5
EZ303U	72	158.0	198.0	55.5	21	122.5
EZ401U	98	118.5	167.0	91.0	22	76.5
EZ402U	98	143.5	192.0	91.0	22	101.5
EZ404U	98	193.5	242.0	91.0	22	151.5
EZ501U	115	112.0	166.5	100.0	22	77.5
EZ502U	115	137.0	191.5	100.0	22	102.5
EZ503U	115	162.0	216.5	100.0	22	127.5
EZ505U	115	212.0	266.5	100.0	22	177.5
EZ701U	145	125.0	184.0	115.0	22	87.0
EZ702U	145	150.0	209.0	115.0	22	112.0
EZ703U	145	175.0	234.0	115.0	22	137.0
EZ705U	145	230.0	289.0	134.0	22	188.0
EZ813U	190	273.5	350.5	156.5	22	219.5
EZ815U	190	355.5	432.5	156.5	22	301.5

Dimensions of geared motors

Type	EZ2		EZ3		EZ4		EZ5		EZ7		EZ8	
	a	m	a	m	a	m	a	m	a	m	a	m
C002	□55	96	□72	96	□98	96	□115	100	□145	102	–	–
C102	–	–	□72	116	□98	116	□115	120	□145	122	–	–
C103	–	–	∅140	153	–	–	–	–	–	–	–	–
C202	–	–	∅140	128	∅140	128	□115	132	□145	134	–	–
C203	–	–	∅140	165	∅140	165	–	–	–	–	–	–
C302	–	–	–	–	–	–	∅160	151	□145	153	□190	156
C303	–	–	∅140	184	∅140	184	∅160	194	–	–	–	–
C402	–	–	–	–	–	–	∅160	178	□145	180	□190	183
C403	–	–	–	–	–	–	∅160	221	–	–	–	–
C502	–	–	–	–	–	–	∅160	198	∅200	200	□190	203
C503	–	–	–	–	–	–	∅160	241	–	–	–	–
C612	–	–	–	–	–	–	–	–	∅200	197	□190	200
C613	–	–	–	–	–	–	∅160	239	∅200	259	–	–
C712	–	–	–	–	–	–	–	–	∅200	222	∅250	224
C713	–	–	–	–	–	–	–	–	∅200	283	∅250	295
C812	–	–	–	–	–	–	–	–	–	–	∅250	270
C813	–	–	–	–	–	–	–	–	∅200	329	∅250	341
C913	–	–	–	–	–	–	–	–	–	–	∅250	373

7.3.3 Solid shaft design with feather key, F housing design (round flange)

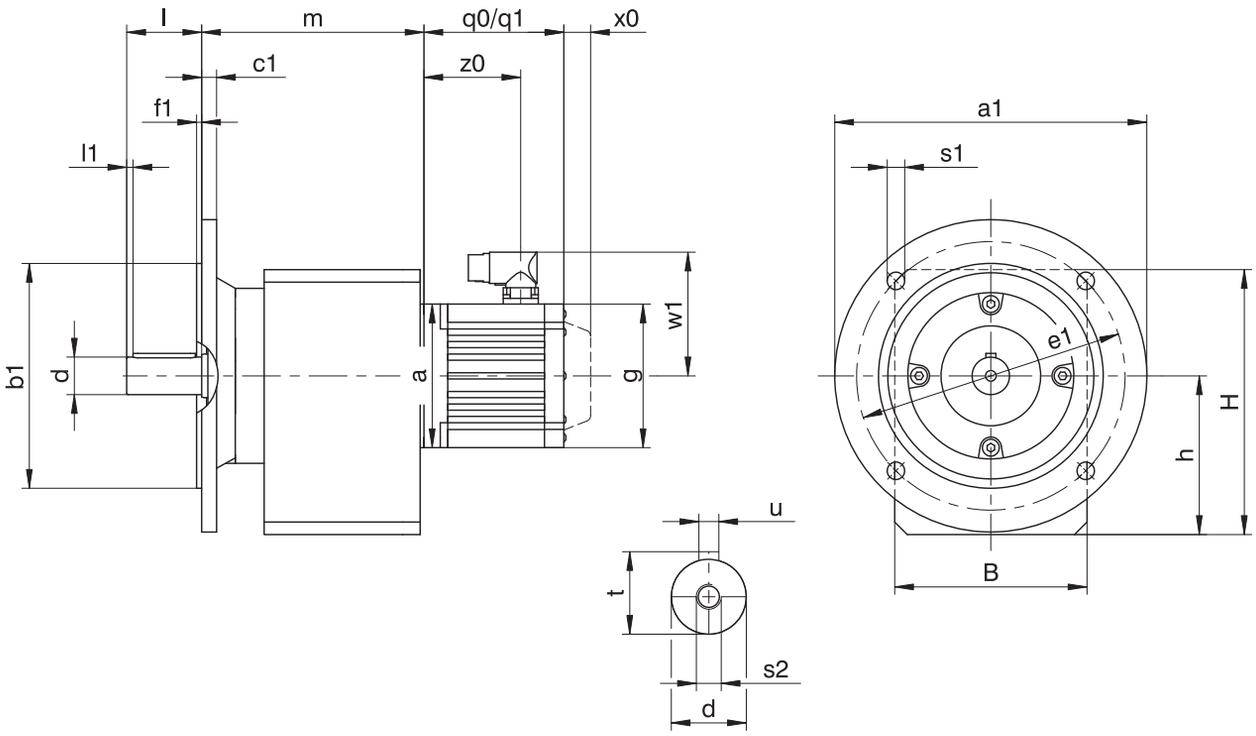

q0 Applies to motors without brake.

q1 Applies to motors with brake.

x0 EZ2: Applies only to motors with brake and encoders using an optical or inductive measuring method
EZ3 – EZ8: Applies to encoders using an optical measuring method

w1 Different for the One Cable Solution (OCS), see the chapter [▶ 17.4]

C203, C303, C612, C613: Motor and gearbox are sometimes non-coaxial.

Options: C0 – C5 also available with solid shaft without feather key; on request starting at C6.

Dimensions of gearboxes

Type	Øa1	Øb1	B	c1	Ød	Øe1	f1	h	H	l	l1	Øs1	s2	t	u
C0	160	110_{j6}	97	10	20_{k6}	130	3.0	79.0	141.0	40	3	9	M6	22.5	A6×6×32
C1	200	130_{j6}	130	12	25_{k6}	165	3.5	100.0	175.0	50	5	11	M10	28.0	A8×7×40
C2	200	130_{j6}	142	12	30_{k6}	165	3.5	112.0	192.0	60	5	11	M10	33.0	A8×7×50
C3	250	180_{j6}	154	12	30_{k6}	215	4.0	127.0	212.0	60	5	14	M10	33.0	A8×7×50
C4	250	180_{j6}	178	14	40_{k6}	215	4.0	142.5	242.5	80	5	14	M16	43.0	A12×8×70
C5	300	230_{j6}	195	16	40_{k6}	265	4.0	166.0	286.0	80	5	14	M16	43.0	A12×8×70
C6	300	230_{j6}	225	17	50_{k6}	265	4.0	195.0	310.0	100	5	14	M16	53.5	A14×9×90
C7	350	250_{h6}	265	18	60_{m6}	300	5.0	231.0	371.0	120	5	18	M20	64.0	A18×11×100
C8	400	300_{h6}	310	20	70_{m6}	350	5.0	285.0	445.0	140	5	18	M20	74.5	A20×12×125
C9	450	350_{h6}	365	23	90_{m6}	400	5.0	334.0	524.0	170	5	18	M24	95.0	A25×14×140

Dimensions of additional round flanges

Type	Øa1	Øb1	c1	Øe1	f1	Øs1
C0	120	80_{j6}	10	100	3.0	7
C0	140	95_{j6}	10	115	3.0	9
C1	140	95_{j6}	8	115	3.5	9
C1	160	110_{j6}	10	130	3.5	9
C2	160	110_{j6}	10	130	3.5	9
C2	250	180_{j6}	12	215	4.0	14
C3	160	110_{j6}	10	130	3.5	9
C3	200	130_{j6}	12	165	3.5	11
C4	200	130_{j6}	14	165	3.5	11
C4	300	230_{j6}	14	265	4.0	14
C5	250	180_{j6}	14	215	4.0	14
C8	350	250_{h6}	18	300	5.0	18
C8	450	350_{h6}	20	400	5.0	18

Dimensions of motors

Type	□g	q0	q1	w1	x0	z0
EZ203U	55	166.0	175.0	47.0	25	111.0
EZ301U	72	114.0	154.0	55.5	21	78.5
EZ302U	72	136.0	176.0	55.5	21	100.5
EZ303U	72	158.0	198.0	55.5	21	122.5
EZ401U	98	118.5	167.0	91.0	22	76.5
EZ402U	98	143.5	192.0	91.0	22	101.5
EZ404U	98	193.5	242.0	91.0	22	151.5
EZ501U	115	112.0	166.5	100.0	22	77.5
EZ502U	115	137.0	191.5	100.0	22	102.5
EZ503U	115	162.0	216.5	100.0	22	127.5
EZ505U	115	212.0	266.5	100.0	22	177.5
EZ701U	145	125.0	184.0	115.0	22	87.0
EZ702U	145	150.0	209.0	115.0	22	112.0
EZ703U	145	175.0	234.0	115.0	22	137.0
EZ705U	145	230.0	289.0	134.0	22	188.0
EZ813U	190	273.5	350.5	156.5	22	219.5
EZ815U	190	355.5	432.5	156.5	22	301.5

Dimensions of geared motors

Type	EZ2		EZ3		EZ4		EZ5		EZ7		EZ8	
	a	m	a	m	a	m	a	m	a	m	a	m
C002	□55	114	□72	114	□98	114	□115	118	□145	120	–	–
C102	–	–	□72	137	□98	137	□115	141	□145	143	–	–
C103	–	–	∅140	174	–	–	–	–	–	–	–	–
C202	–	–	∅140	155	∅140	155	□115	159	□145	161	–	–
C203	–	–	∅140	192	∅140	192	–	–	–	–	–	–
C302	–	–	–	–	–	–	∅160	178	□145	180	□190	183
C303	–	–	∅140	211	∅140	211	∅160	221	–	–	–	–
C402	–	–	–	–	–	–	∅160	206	□145	208	□190	211
C403	–	–	–	–	–	–	∅160	249	–	–	–	–
C502	–	–	–	–	–	–	∅160	227	∅200	229	□190	232
C503	–	–	–	–	–	–	∅160	270	–	–	–	–
C612	–	–	–	–	–	–	–	–	∅200	233	□190	236
C613	–	–	–	–	–	–	∅160	275	∅200	295	–	–
C712	–	–	–	–	–	–	–	–	∅200	266	∅250	268
C713	–	–	–	–	–	–	–	–	∅200	327	∅250	339
C812	–	–	–	–	–	–	–	–	–	–	∅250	315
C813	–	–	–	–	–	–	–	–	∅200	374	∅250	386
C913	–	–	–	–	–	–	–	–	–	–	∅250	423

7.3.4 Solid shaft design with feather key, Q housing design (square flange)

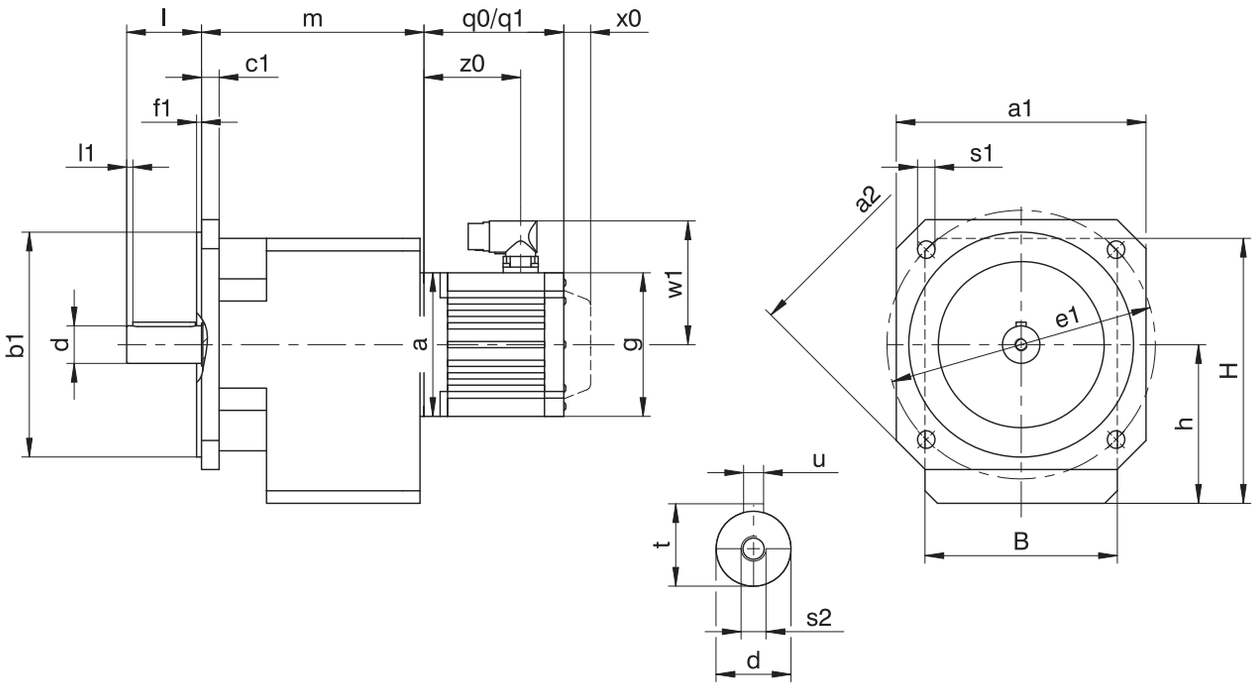

q0	Applies to motors without brake.	q1	Applies to motors with brake.
x0	EZ2: Applies only to motors with brake and encoders using an optical or inductive measuring method EZ3 – EZ8: Applies to encoders using an optical measuring method	w1	Different for the One Cable Solution (OCS), see the chapter [▶ 17.4]

C203, C303: Motor and gearbox are sometimes non-coaxial.

Options: C0 – C4 also available with solid shaft without feather key.

Dimensions of gearboxes

Type	□a1	□a2	Ø$b1_{j6}$	B	c1	Ød_{k6}	Ø$e1_{k6}$	f1	h	H	l	l1	Øs1	s2	t	u
C0	124	160	110_{j6}	97	9	20_{k6}	130	3.0	79.0	141.0	40	3	9	M6	22.5	A6×6×32
C1	145	192	130_{j6}	130	11	25_{k6}	165	3.5	100.0	175.0	50	5	11	M10	28.0	A8×7×40
C2	145	192	130_{j6}	142	11	30_{k6}	165	3.5	112.0	192.0	60	5	11	M10	33.0	A8×7×50
C3	200	250	180_{j6}	154	14	30_{k6}	215	4.0	127.0	212.0	60	5	14	M10	33.0	A8×7×50
C4	200	250	180_{j6}	178	14	40_{k6}	215	4.0	142.5	242.5	80	5	14	M16	43.0	A12×8×70

Dimensions of motors

Type	□g	q0	q1	w1	x0	z0
EZ203U	55	166.0	175.0	47.0	25	111.0
EZ301U	72	114.0	154.0	55.5	21	78.5
EZ302U	72	136.0	176.0	55.5	21	100.5
EZ303U	72	158.0	198.0	55.5	21	122.5
EZ401U	98	118.5	167.0	91.0	22	76.5
EZ402U	98	143.5	192.0	91.0	22	101.5
EZ404U	98	193.5	242.0	91.0	22	151.5
EZ501U	115	112.0	166.5	100.0	22	77.5
EZ502U	115	137.0	191.5	100.0	22	102.5
EZ503U	115	162.0	216.5	100.0	22	127.5
EZ505U	115	212.0	266.5	100.0	22	177.5
EZ701U	145	125.0	184.0	115.0	22	87.0
EZ702U	145	150.0	209.0	115.0	22	112.0
EZ703U	145	175.0	234.0	115.0	22	137.0
EZ705U	145	230.0	289.0	134.0	22	188.0
EZ813U	190	273.5	350.5	156.5	22	219.5
EZ815U	190	355.5	432.5	156.5	22	301.5

Dimensions of geared motors

Type	EZ2		EZ3		EZ4		EZ5		EZ7		EZ8	
	a	m	a	m	a	m	a	m	a	m	a	m
C002	□55	114	□72	114	□98	114	□115	118	□145	120	–	–
C102	–	–	□72	137	□98	137	□115	141	□145	143	–	–
C103	–	–	∅140	174	–	–	–	–	–	–	–	–
C202	–	–	∅140	155	∅140	155	□115	159	□145	161	–	–
C203	–	–	∅140	192	∅140	192	–	–	–	–	–	–
C302	–	–	–	–	–	–	∅160	178	□145	180	□190	183
C303	–	–	∅140	211	∅140	211	∅160	221	–	–	–	–
C402	–	–	–	–	–	–	∅160	206	□145	208	□190	211
C403	–	–	–	–	–	–	∅160	249	–	–	–	–

7.3.5 Oil expansion tank

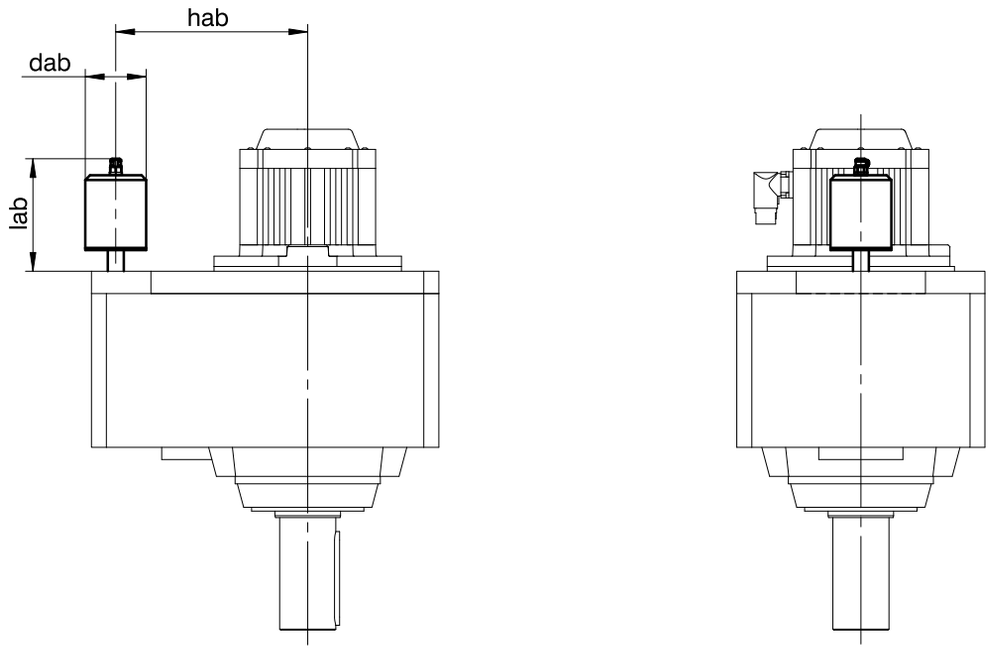

Dimensions

Type	EZ7			EZ8		
	dab	hab	lab	dab	hab	lab
C612	65	170	114.5	65	170	112
C712	73	205	129.5	73	205	129.5

More information can be found in Chapter [▶ 7.6.4]

7.4 Type designation

This chapter shows you an explanation of the type designation with the associated options.

Additional ordering information not included in the type designation can be found at the end of the chapter.

Example code

C	2	0	2	N	0280	EZ401U

Explanation

Code	Designation	Design
C	Type	Helical gearbox
2	Size	2 (example)
0	Generation	Generation 0
1		Generation 1
2	Stages	Two-stage
3		Three-stage
G	Housing	Pitch circle diameter
F		Round flange
Q		Square flange
N		Foot
0280	Transmission ratio (i x 10 rounded)	i = 28.24 (example)
EZ401U	Motor	EZ synchronous servo motor

To complete the type designation, also specify the following in your order:

- A detailed type designation of the motor, see the chapter [▶ 17.5]
- Mounting position, see the chapter [▶ 7.5.5]
- Position of the plug connectors, see the chapter [▶ 7.5.7]
- Oil expansion tank (option, recommended for gearboxes in mounting position EL5), see the chapter [▶ 7.6.4]

To make selecting your geared motor easy, use our STOBER Configurator at https://configurator.stoeber.de/en-US/.

You can find a detailed description of the nameplate in the chapter [▶ 17.5.1].

7.5 Product description

7.5.1 Input options

EZ synchronous servo motor

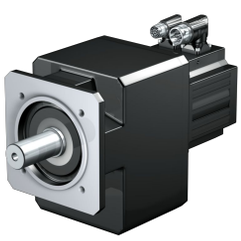

Catalog ID 442437_en

MB motor adapter + EZ synchronous servo motor



Catalog ID 443311_en

LM Lean motor

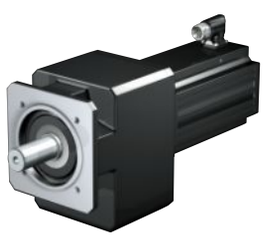

Catalog ID 443016_en

Asynchronous motor

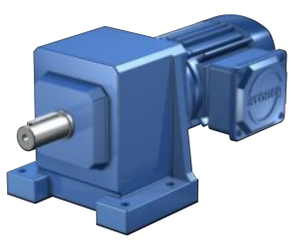

Catalog ID 443136_en

The corresponding catalogs can be found at http://www.stoeber.de/en/downloads/

Enter the ID of the catalog in the Search term field.

7.5.2 Housing design

Pitch circle diameter G	Round flange F
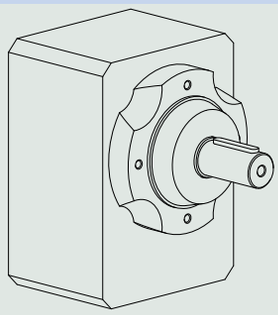	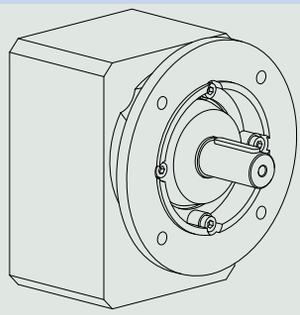

Square flange Q	Foot N
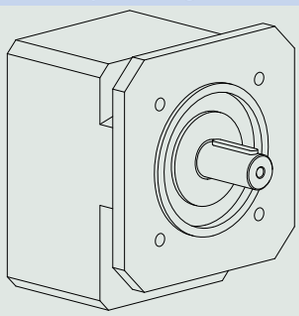	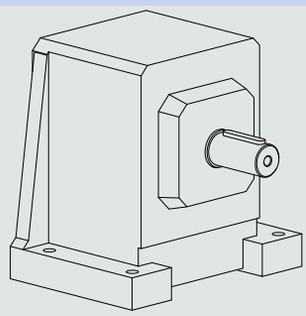

	G	F	Q	N
C0	✓	✓	✓	✓
C1	✓	✓	✓	✓
C2	✓	✓	✓	✓
C3	✓	✓	✓	✓
C4	✓	✓	✓	✓
C5	✓	✓	–	✓
C6	✓	✓	–	✓
C7	✓	✓	–	✓
C8	✓	✓	–	✓
C9	✓	✓	–	✓

7.5.3 Shaft design

Gearboxes in sizes C0 – C9 come standard with a solid shaft with feather key.

Gearboxes in sizes C0 – C5 can be ordered with the option of a solid shaft without feather key. Only upon request starting at size C6.

7.5.4 Installation conditions

Fastening the gearboxes on the machine side using the pitch circle diameter

The specified torques and forces only apply when gearboxes are fastened on the machine side using screws of strength class 10.9. In addition, the gear housings must be adjusted at the pilot. The machine-side fit must be H7.

7.5.5 Mounting positions

The following table shows the standard mounting positions.

The numbers identify the gearbox sides. The mounting position is defined by the gearbox side facing downwards.

EL1 IMB3, IMB5, IMB14, IMB34, IMB35	EL2 IMB8	EL3 IMB7
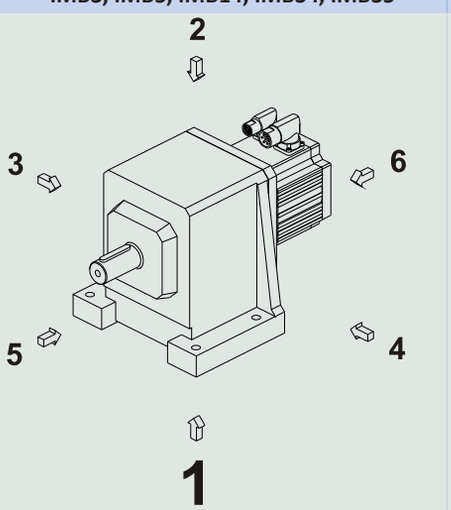	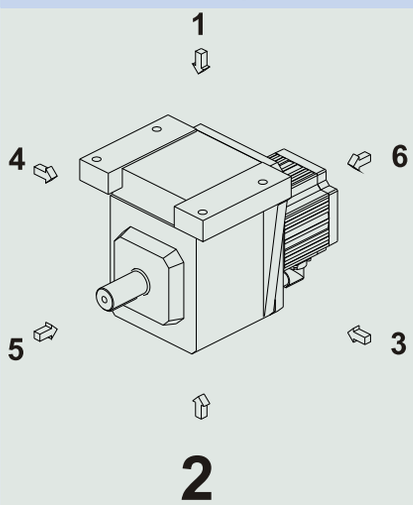	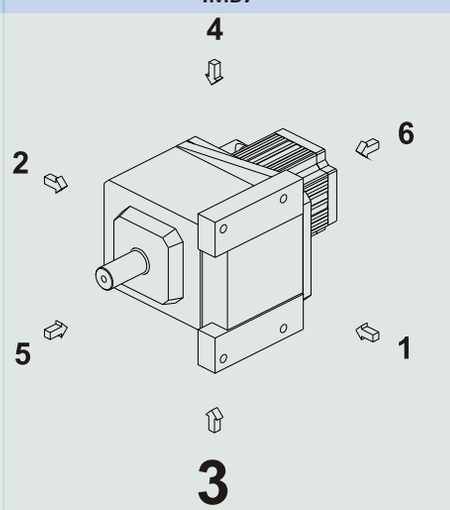
EL4 **IMB6**	**EL5** **IMV1, IMV5, IMV18**	**EL6** **IMV3, IMV6, IMV19**
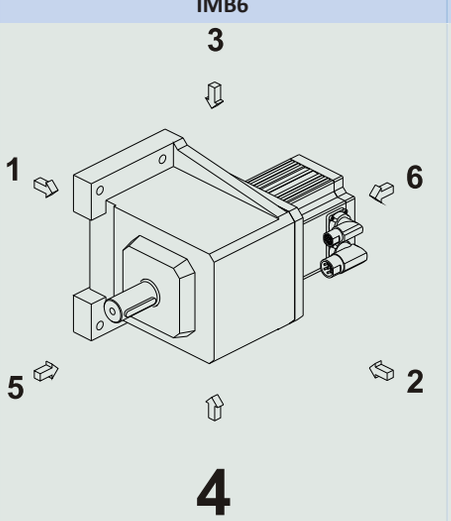	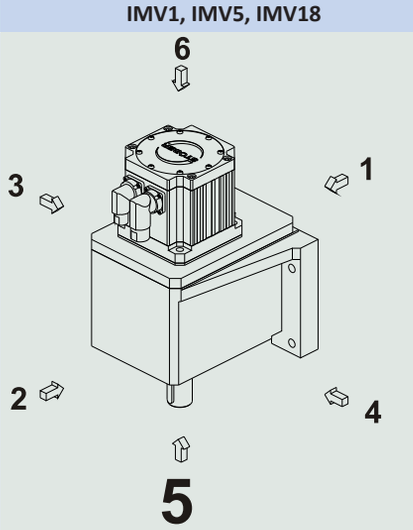	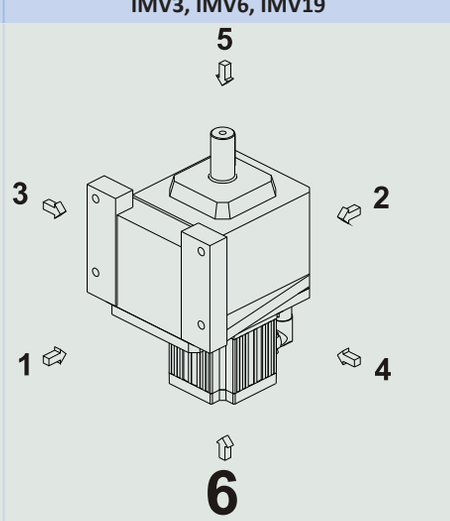

Since the lubricant filling volume of the gearbox depends on the mounting position, the mounting position must be specified when ordering.

7.5.6 Lubricants

STOBER fills the gearboxes with the amount and type of lubricant specified on the nameplate. The filling volume and the structure of the gearboxes depend on the mounting position.

Only install the gearboxes in the intended mounting position! Reposition the gearboxes only after consulting STOBER. Otherwise, STOBER assumes no liability for the gearboxes.

You will receive lubricants for use in the food industry upon request.

7.5.7 Position of the plug connectors

Mounting position EL1 Plug connector in 270° position (standard)	Mounting position EL4 Plug connector in 270° position (standard)
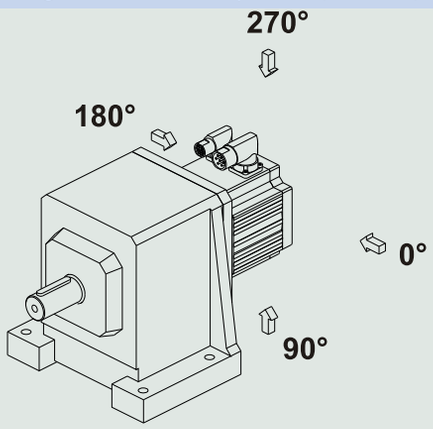	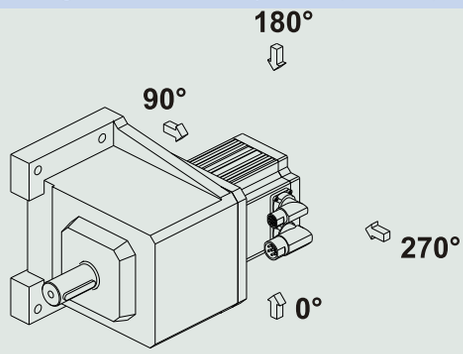

Indicate variations for your geared motor in the order.

Note that the plug connector position rotates along with the geared motor if the geared motor is in another mounting position.

7.5.8 Other product features

Feature	Value
Max. permitted gearbox temperature (on the surface of the gearbox)	≤ 80 °C
Paint	Black RAL 9005
Explosion-proof design in accordance with (ATEX) Directive 2014/34/EU (optional)	Not available
Efficiency:	
η_{get} two-stage	97%
η_{get} three-stage	96%
Protection class:[1]	
Gearbox	IP65
Motor	IP56, optionally IP66

7.5.9 Maintenance

The instructions for maintenance can be found in the operating manual, ID 443027_en, at http://www.stoeber.de/en/downloads/. Enter the ID of the documentation in the Search... field.

Ventilation

Air release valves are fitted as a standard feature and independently of installation position for gearbox sizes C6 to C9.

For the position and dimensions of the air release valve, refer to the 3D model.

Download the 3D model at https://configurator.stoeber.de/en-US/.

[1] Observe the protection class of all the components.

7.5.10 Direction of rotation

C002 – C912	C103 – C913
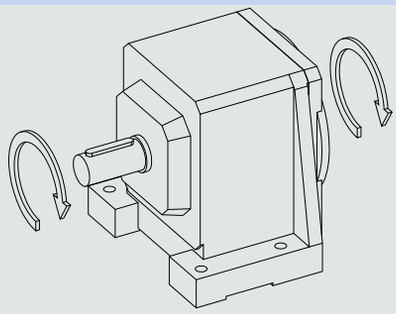	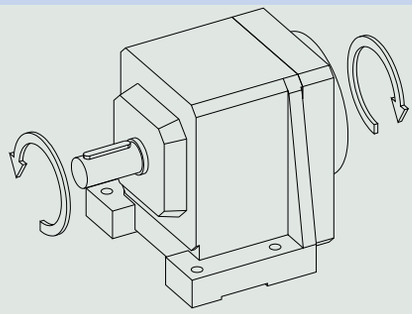
The input and output rotate in the same direction.	The input and output rotate in opposite directions.

The pictures show mounting position EL1.

7.6 Project configuration

Project your drives using our SERVOsoft designing software. Download SERVOsoft free of charge after registration at https://www.stoeber.de/en/services/info-servosoft/.

It is the most convenient and reliable method of drive selection, as the entire torque/speed curve of the application is displayed and evaluated here in the curve of the geared motor.

In this chapter, only limit values for specific operating points can be taken into consideration for manual drive selection.

An explanation of the formula symbols can be found in Chapter [▷ 20.1].

The formula symbols for values actually present in the application are marked with *.

7.6.1 Drive selection

Drive selection for gearboxes

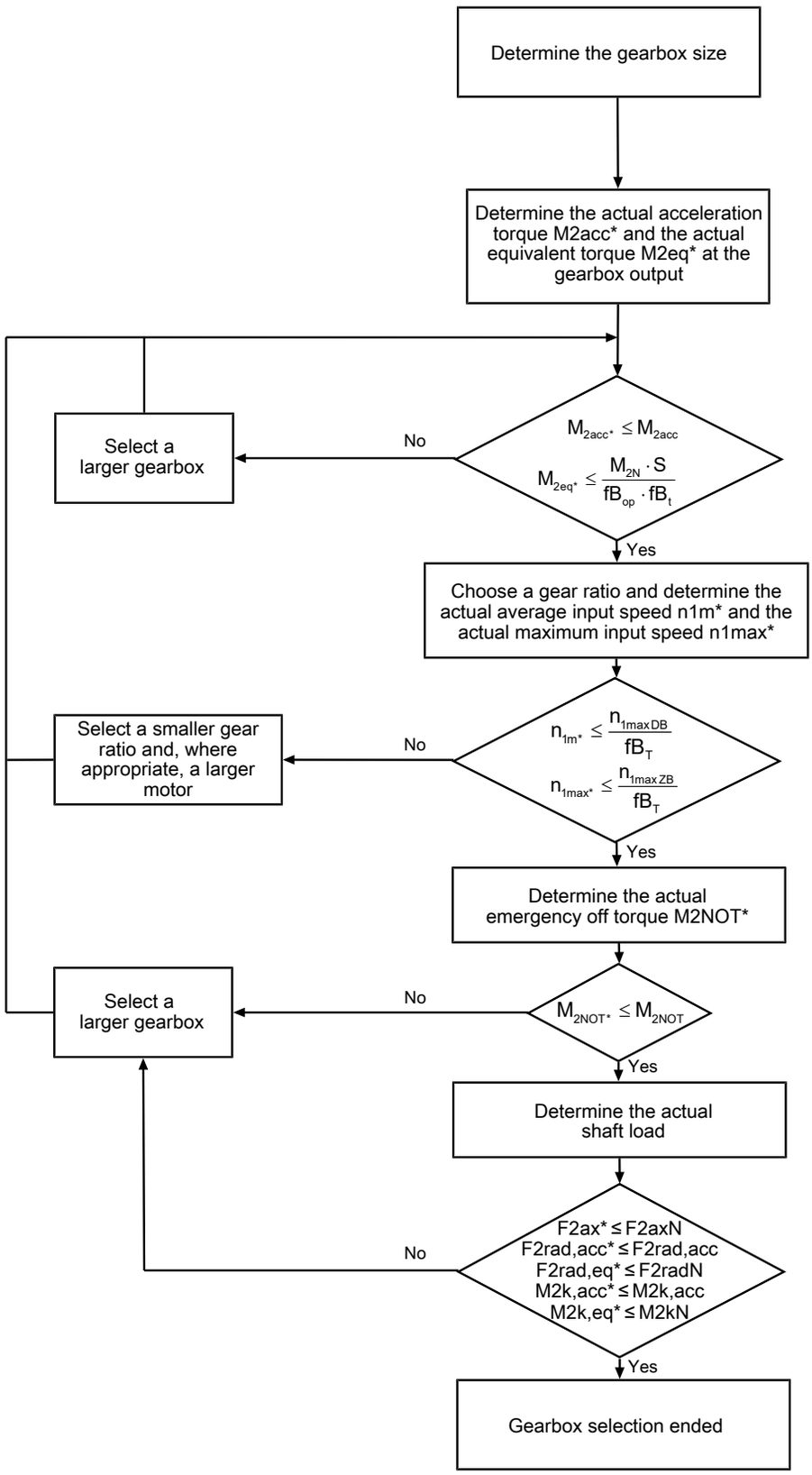

Calculate the forces and tilting torques in the chapter Permitted shaft loads.

Refer to the selection tables for the values for i, n_{1maxDB}, n_{1maxZB}, M_{2acc}, M_{2NOT}, M_{2N} and S.

The values for fB_T, fB_{op} and fB_t can be found in the corresponding tables in this chapter.

Drive selection for motors

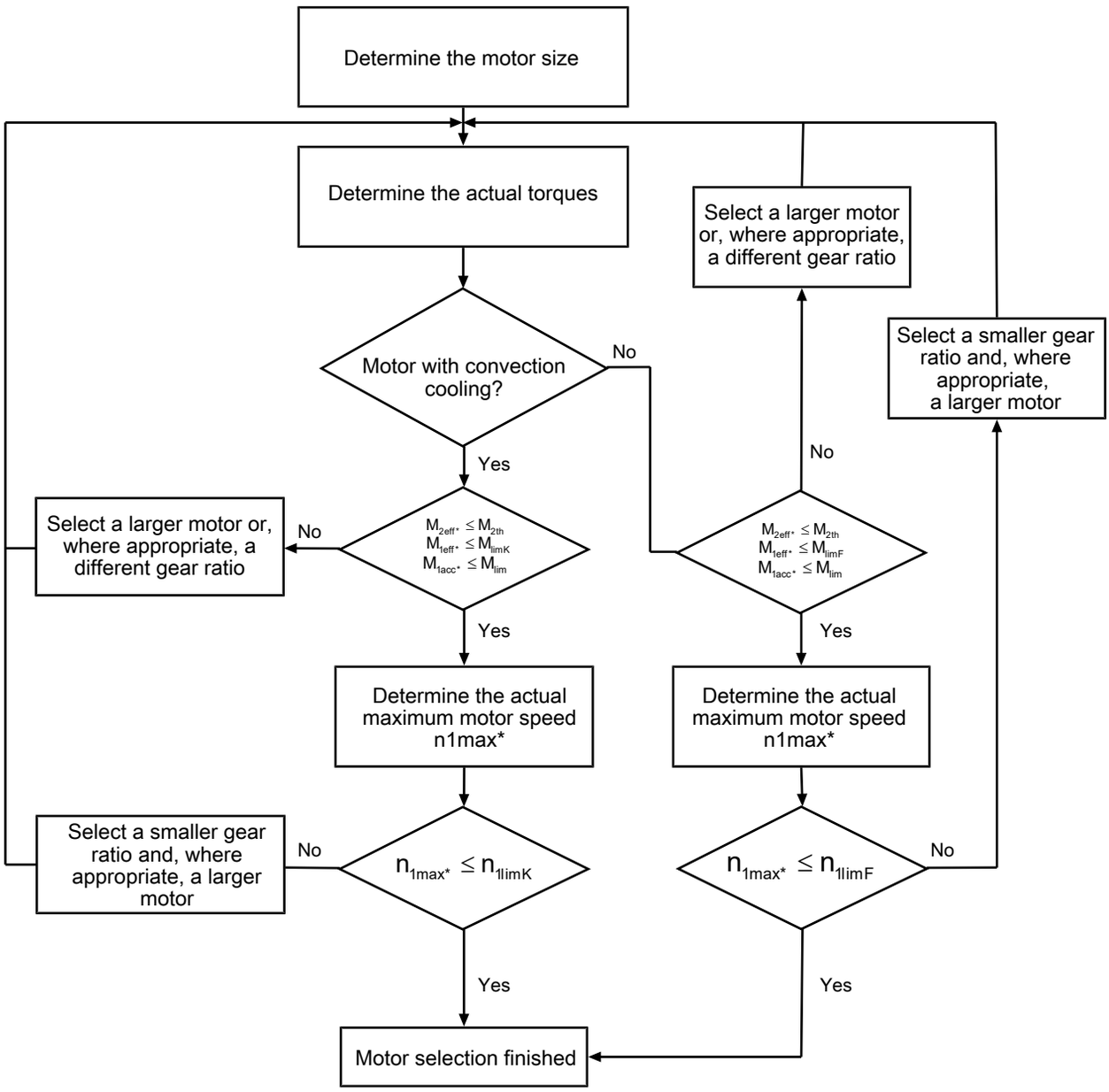

The value for M_{lim}, M_{limK}, M_{limF}, n_{1limK} and n_{1limF} can be found in the motor characteristic curve in the chapter [▷ 17.3]. Note the size, nominal speed n_N and cooling type of the motor.

Example of cyclic operation

The following calculations are based on a representation of the power taken from the output based in accordance with the following example:

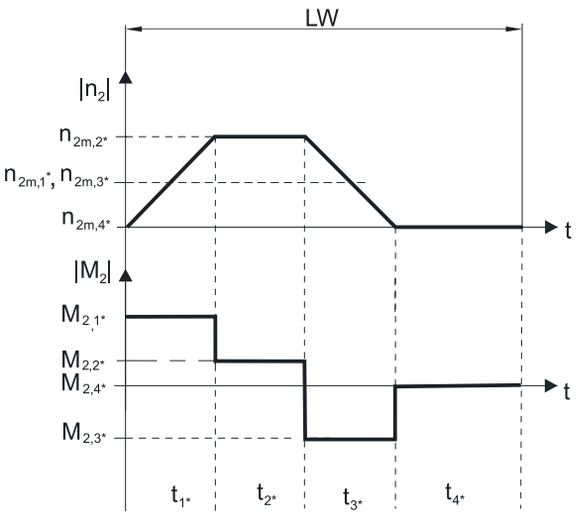

Calculation of the actual maximum acceleration torques

$$M_{2acc*} = J_{tot} \cdot \frac{\Delta n_2}{9{,}55 \cdot \Delta t} + M_{L*}$$

$$M_{1acc*} = \frac{M_{2acc*}}{i \cdot \eta_{get}} + J_1 \cdot \frac{\Delta n_1}{9{,}55 \cdot \Delta t}$$

Calculation of the actual average input speed

$$n_{1m*} = n_{2m*} \cdot i$$

$$n_{2m*} = \frac{\left|n_{2m,1*}\right| \cdot t_{1*} + \ldots + \left|n_{2m,n*}\right| \cdot t_{n*}}{t_{1*} + \ldots + t_{n*}}$$

If $t_{1*} + \ldots + t_{3*} \geq 6$ min, calculate n_{2m*} without the rest phase t_{4*}.

The values for the ratio i can be found in the selection tables.

Calculation of the actual effective torque

$$M_{2eff*} = \sqrt{\frac{t_{1*} \cdot M_{2,1*}{}^2 + \ldots + t_{n*} \cdot M_{2,n*}{}^2}{t_{1*} + \ldots + t_{n*}}}$$

Calculation of the actual emergency off torque

$$M_{2NOT*} = J_{tot} \cdot \frac{\Delta n_2}{9.55 \cdot \Delta t} + M_{L*}$$

Calculation of the actual equivalent torque

$$M_{2eq*} = \sqrt[3]{\frac{\left|n_{2m,1*}\right| \cdot t_{1*} \cdot \left|M_{2,1*}{}^3\right| + \ldots + \left|n_{2m,n*}\right| \cdot t_{n*} \cdot \left|M_{2,n*}{}^3\right|}{\left|n_{2m,1*}\right| \cdot t_{1*} + \ldots + \left|n_{2m,n*}\right| \cdot t_{n*}}}$$

Calculation of the thermal limit torque

Calculate the thermal limit torque M_{2th} for a duty cycle $ED_{10} > 50\%$ and the actual average input speed n_{1m*}. (At $K_{mot,th} \leq 0$ you must reduce the average input speed n_{1m*} accordingly or select another geared motor size.)

$$M_{2th} = M_{op} \cdot i \cdot K_{mot,th}$$

$$K_{mot,th} = 0{,}95 - \frac{a_{th}}{1000} \cdot athEL \cdot fB_T \cdot \left(\frac{n_{1m*}}{1000}\right)^3$$

The values for i and a_{th} can be found in the selection tables.

The values for a_{thEL} and fB_T can be found in the corresponding tables in this chapter.

The value for the torque of the motor at operating point M_{op} with the determined average input speed n_{1m*} can be found in the motor characteristic curve in the chapter [▶ 17.3]. Note the size, nominal speed n_N and cooling type of the motor. The figure below shows an example of reading the torque M_{op} of a motor with convection cooling at the operating point.

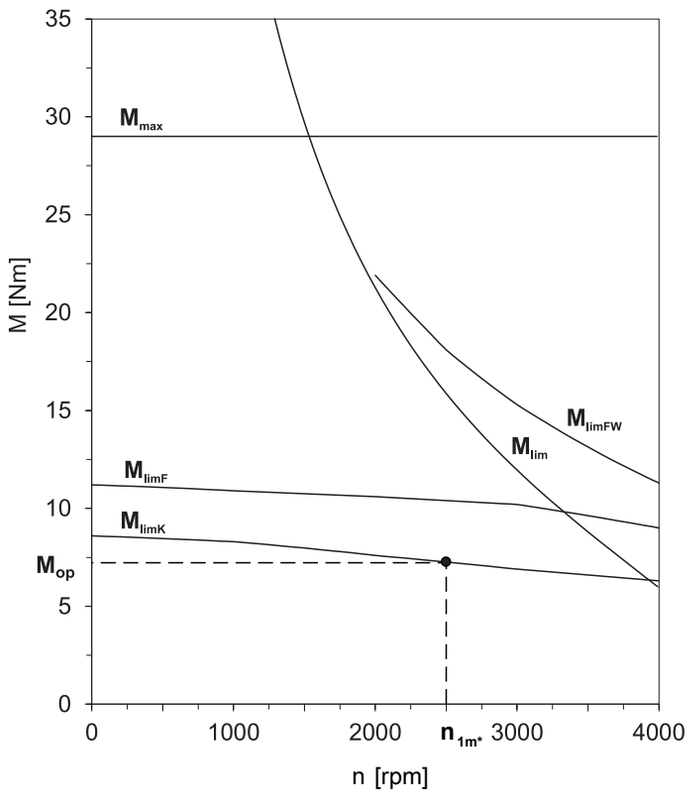

Operating factors

Parameter a_{thEL}

Mounting position	a_{thEL}
EL1, 2, 5, 6	1.0
EL3, 4	1.1

Operating mode	fB_{op}
Uniform continuous operation	1.00
Cyclic operation	1.25
Reversing load cyclic operation	1.40

Run time	fB_t
Daily runtime ≤ 8 h	1.00
Daily runtime ≤ 16 h	1.15
Daily runtime ≤ 24 h	1.20

Temperature		fB_T
Motor cooling	**Surrounding temperature**	
Motor with forced ventilation	≤ 20 °C	0.9
	≤ 30 °C	1.0
	≤ 40 °C	1.15
Motor with convection cooling	≤ 20 °C	1.0
	≤ 30 °C	1.1
	≤ 40 °C	1.25

Notes

- The maximum permitted gearbox temperature (see the "Other product features" chapter) must not be exceeded. Doing so may result in damage to the geared motor.
- For braking from full speed (for example when the power fails or when setting up the machine), note the permitted gearbox torques (M_{2acc}, M_{2NOT}) in the selection tables.

7.6.2 Permitted shaft loads for the output shaft

The values specified in the tables apply to the permitted shaft loads:

- For shaft dimensions in accordance with the catalog
- For output speeds $n_{2m*} \leq 20$ rpm ($F_{2axN} = F_{2ax20}$; $F_{2radN} = F_{2rad20}$; $M_{2kN} = M_{2k20}$)
- Only if radial forces on the gearbox are stabilized by its pilots for the pitch circle diameter and flange housing design

Permitted shaft loads

Type	z_2	F_{2ax20}	F_{2rad20}	$F_{2rad,acc}$	M_{2k20}	$M_{2k,acc}$
	[mm]	[N]	[N]	[N]	[Nm]	[Nm]
C0	20.0	500	1900	1900	80	80
C1	30.0	850	3400	3400	190	190
C2	30.0	1050	4200	4200	260	260
C3	30.0	1400	5650	5650	350	350
C4	35.0	2400	9700	9700	750	750
C5	42.0	3000	11000	11000	900	900
C6	40.0	4000	16000	16000	1500	1500
C7	45.0	5500	22000	22000	2400	2400
C8	50.0	7500	30000	30000	3700	3700
C9	55.0	9500	37000	37000	5200	5200

For other output speeds, download diagrams at https://configurator.stoeber.de/en-US/.

The following applies to output speeds $n_{2m*} > 20$ rpm:

$$F_{2axN} = \frac{F_{2ax20}}{\sqrt[3]{\frac{n_{2m*}}{20\ \text{rpm}}}} \qquad F_{2radN} = \frac{F_{2rad20}}{\sqrt[3]{\frac{n_{2m*}}{20\ \text{rpm}}}} \qquad M_{2kN} = \frac{M_{2k20}}{\sqrt[3]{\frac{n_{2m*}}{20\ \text{rpm}}}}$$

The values for F_{2ax20}, F_{2rad20} and M_{2k20} can be found in the table "Permitted shaft loads" in this chapter.

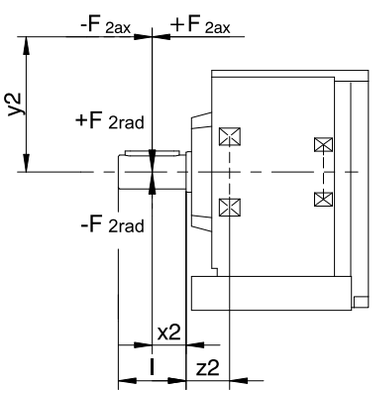

Fig. 1: Force application points

The specified values for F_{2rad20} and $F_{2rad,acc}$ refer to an application of force at the center of the output shaft: $x_2 = l/2$.

Shaft dimensions can be found in the "Dimensional drawings" chapter.

The following applies to other force application points:

$$M_{2k,acc*} = \frac{2 \cdot F_{2ax*} \cdot y_2 + F_{2rad,acc*} \cdot (x_2 + z_2)}{1000}$$

For applications with multiple axial and/or radial forces, you must add the forces as vectors.

In the event of EMERGENCY OFF operation (max. 1000 load changes), you can multiply the permitted forces and torques for F_{2ax20}, F_{2rad20} and M_{2k20} by a factor of two.

Also note the calculation for equivalent values:

$$M_{2k,eq^*} = \sqrt[3]{\frac{\left|n_{2m,1^*}\right| \cdot t_{1^*} \cdot \left|M_{2k,acc,1^*}{}^3\right| + \ldots + \left|n_{2m,n^*}\right| \cdot t_{n^*} \cdot \left|M_{2k,acc,n^*}{}^3\right|}{\left|n_{2m,1^*}\right| \cdot t_{1^*} + \ldots + \left|n_{2m,n^*}\right| \cdot t_{n^*}}}$$

$$F_{2rad,eq^*} = \sqrt[3]{\frac{\left|n_{2m,1^*}\right| \cdot t_{1^*} \cdot \left|F_{2rad,acc,1^*}{}^3\right| + \ldots + \left|n_{2m,n^*}\right| \cdot t_{n^*} \cdot \left|F_{2rad,acc,n^*}{}^3\right|}{\left|n_{2m,1^*}\right| \cdot t_{1^*} + \ldots + \left|n_{2m,n^*}\right| \cdot t_{n^*}}}$$

7.6.3 Radial shaft seal rings

Leak-proofness

Our gearboxes are equipped with high-quality radial shaft seal rings and checked for leaks. However, a leak cannot be fully ruled out over the length of use of a gearbox. If you use a gearbox with goods incompatible with the lubricant, you must take measures to prevent direct contact with the gearbox lubricant in case of a leak.

7.6.4 Oil expansion tank

The gearboxes have a higher fill level in mounting position EL5. The oil expansion tank prevents oil from escaping out of the gearbox.

Notes

- We recommend using an oil expansion tank in mounting position EL5 (additional cost) for fast running gearboxes with an input speed $n_1 > 1750$ rpm and gear ratios $i < 20$.
- It is not possible to use an oil expansion tank if the plug connector is at 90°!
- The oil expansion tank can only be used with certain sizes; see the chapter [▷ 7.3.5]

7.7 Additional documentation

Additional documentation related to the product can be found at
http://www.stoeber.de/en/downloads/

Enter the ID of the documentation in the Search term field.

Documentation	ID
Operating manual gearboxes, geared motors C	443365_en

8 F offset helical geared motors

Table of contents

8.1 Overview 186

8.2 Selection tables 187

8.3 Dimensional drawings 199

8.3.1 A shaft design (hollow shaft), G housing design (pitch circle diameter) 200

8.3.2 A shaft design (hollow shaft), GN housing design (pitch circle diameter + side fastening) 202

8.3.3 A shaft design (hollow shaft), F housing design (round flange) 204

8.3.4 A shaft design (hollow shaft), Q housing design (square flange) 206

8.3.5 V shaft design (solid shaft), F housing design (round flange) 208

8.3.6 V shaft design (solid shaft), Q housing design (square flange) 210

8.3.7 S shaft design (hollow shaft with shrink disk), G housing design (pitch circle diameter) 212

8.3.8 S shaft design (hollow shaft with shrink disk), GN housing design (pitch circle diameter + side fastening) 214

8.3.9 S shaft design (hollow shaft with shrink disk), F housing design (round flange) 216

8.3.10 S shaft design (hollow shaft with shrink disk), Q housing design (square flange) 218

8.4 Type designation 220

8.5 Product description 220

8.5.1 Input options 220

8.5.2 Housing design 221

8.5.3 Combinatorial shaft/housing design 222

8.5.4 Installation conditions 222

8.5.5 Mounting positions 223

8.5.6 Lubricants 223

8.5.7 Position of the plug connectors 224

8.5.8 Other product features 224

8.5.9 Direction of rotation 224

8.6 Project configuration 225

8.6.1 Drive selection 226

8.6.2 Permitted shaft loads for the output shaft 230

8.6.3 Radial shaft seal rings 232

8.7 Additional documentation 232

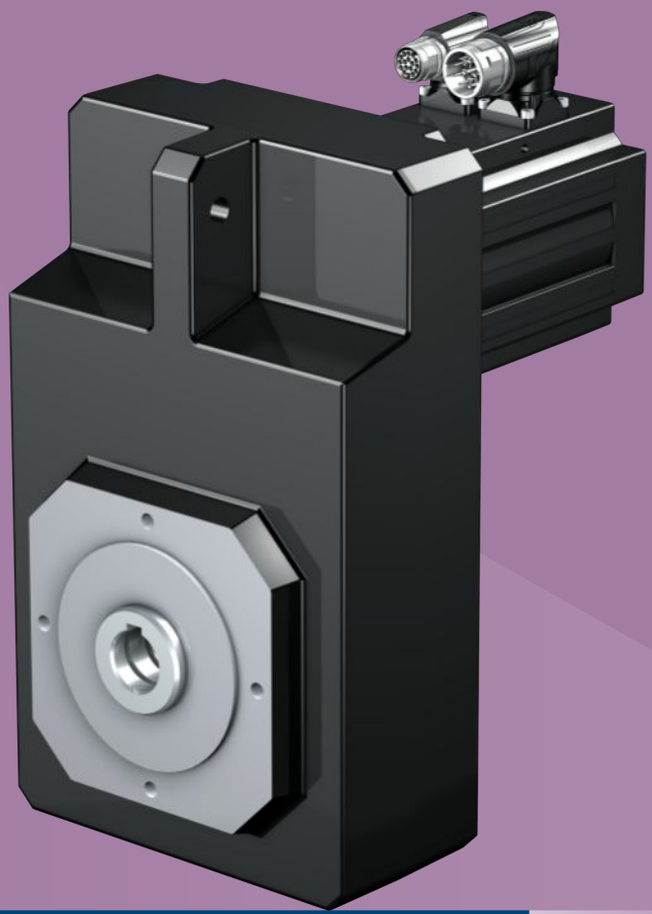

8 Offset helical geared motors F

8.1 Overview

Offset helical geared motors with large axial distances

Features

Power density	★☆☆☆☆
Backlash	★★★☆☆
Price category	€
Shaft load	★★★☆☆
Smooth operation	★★★☆☆
Torsional stiffness	★★☆☆☆
Mass moment of inertia	★★★★★
Helical gearing	✓
Maintenance-free	✓
FKM seal ring at the input	✓
Large axial distances, suitable for confined situations	✓
Compact and highly dynamic due to direct motor attachment	✓

Key ★☆☆☆☆ good | ★★★★★ excellent
€ Economy | €€€€€ Premium

Technical data

i	4.3 – 440
M_{2acc}	21 – 1100 Nm
$\Delta\phi_2$	5 – 11 arcmin
η_{get}	96 – 97 %

8.2 Selection tables

The technical data specified in the selection tables applies to:

- Installation altitudes up to 1000 m above sea level
- Surrounding temperatures from 0 °C to 40 °C
- Drives with convection-cooled motors (e.g. EZ401**U**)
- Weight specification for mounting position EL1, housing design G

For the technical data on drives with forced ventilated motors (e.g. EZ401**B**), refer to https://configurator.stoeber.de/en-US/.

An explanation of the formula symbols can be found in Chapter [▷ 20.1].

n_{2N}	M_{2N}	$M_{2,0}$	a_{th}	S	Type	M_{2acc}	M_{2NOT}	i	i_{exakt}	n_{1maxDB}		n_{1maxZB}	J_1	$\Delta\varphi_2$	$\Delta\varphi_{2redII}$	C_2	m
										EL1,2,3,4	EL5,6						
[rpm]	[Nm]	[Nm]				[Nm]	[Nm]			[rpm]	[rpm]	[rpm]	[kgcm²]	[arcmin]	[arcmin]	[Nm/ arcmin]	[kg]
F1 (n_{1N} = 3000 min^{-1}, $M_{2acc,max}$ = 120 Nm)																	
27	101	103	1.6	1.2	F102_1120 EZ301U	120	240	111.9	2015/18	4000	4000	7000	0.21	11.0	6.0	7.7	13
32	84	86	1.5	1.4	F102_0940 EZ301U	120	240	93.63	7865/84	4000	4000	7000	0.22	11.0	6.0	7.7	13
43	63	65	1.3	1.9	F102_0700 EZ301U	120	240	70.06	1261/18	4000	4000	7000	0.23	11.0	6.0	7.7	13
43	108	114	2.2	1.1	F102_0700 EZ302U	120	240	70.06	1261/18	4000	4000	7000	0.33	11.0	6.0	7.7	13
54	50	52	1.1	2.4	F102_0560 EZ301U	120	240	55.97	2015/36	4000	4000	7000	0.25	11.0	6.0	7.7	13
54	86	91	1.9	1.4	F102_0560 EZ302U	120	240	55.97	2015/36	4000	4000	7000	0.35	11.0	6.0	7.7	13
54	112	119	2.5	1.1	F102_0560 EZ303U	120	240	55.97	2015/36	4000	4000	7000	0.46	11.0	6.0	7.7	14
65	42	43	1.0	2.9	F102_0460 EZ301U	120	240	46.43	325/7	4000	4000	7000	0.28	11.0	6.0	7.7	13
65	72	76	1.8	1.7	F102_0460 EZ302U	120	240	46.43	325/7	4000	4000	7000	0.38	11.0	6.0	7.7	13
65	93	99	2.3	1.3	F102_0460 EZ303U	120	240	46.43	325/7	4000	4000	7000	0.49	11.0	6.0	7.7	14
86	32	32	1.0	3.5	F102_0350 EZ301U	95	240	35.05	3575/102	4000	4000	6500	0.32	11.0	6.0	7.7	13
86	54	57	1.7	2.0	F102_0350 EZ302U	120	240	35.05	3575/102	4000	4000	6500	0.42	11.0	6.0	7.7	13
86	70	74	2.2	1.6	F102_0350 EZ303U	120	240	35.05	3575/102	4000	4000	6500	0.53	11.0	6.0	7.7	14
86	95	102	2.9	1.2	F102_0350 EZ401U	120	240	35.05	3575/102	4000	4000	6500	1.1	11.0	6.0	7.7	15
107	25	26	0.9	4.0	F102_0280 EZ301U	77	205	28.17	169/6	4000	4000	6500	0.37	11.0	6.0	7.7	13
107	43	46	1.6	2.3	F102_0280 EZ302U	120	205	28.17	169/6	4000	4000	6500	0.47	11.0	6.0	7.7	13
107	57	60	2.1	1.8	F102_0280 EZ303U	120	205	28.17	169/6	4000	4000	6500	0.58	11.0	6.0	7.7	14
107	77	82	2.8	1.3	F102_0280 EZ401U	120	240	28.17	169/6	4000	4000	6500	1.1	11.0	6.0	7.7	15
130	21	21	0.9	4.6	F102_0230 EZ301U	63	168	23.08	3185/138	3700	3600	6000	0.43	11.0	6.0	7.7	13
130	36	38	1.6	2.7	F102_0230 EZ302U	112	168	23.08	3185/138	3700	3600	6000	0.53	11.0	6.0	7.7	13
130	46	49	2.0	2.1	F102_0230 EZ303U	120	168	23.08	3185/138	3700	3600	6000	0.64	11.0	6.0	7.7	14
130	63	67	2.7	1.5	F102_0230 EZ401U	120	240	23.08	3185/138	3700	3600	6000	1.2	11.0	6.0	7.7	15
163	28	30	1.5	3.1	F102_0185 EZ302U	90	134	18.46	1495/81	3700	3600	6000	0.62	11.0	6.0	7.7	13
163	37	39	2.0	2.4	F102_0185 EZ303U	107	134	18.46	1495/81	3700	3600	6000	0.73	11.0	6.0	7.7	14
163	50	54	2.6	1.8	F102_0185 EZ401U	120	240	18.46	1495/81	3700	3600	6000	1.3	11.0	6.0	7.7	15
163	77	84	4.1	1.1	F102_0185 EZ501U	120	240	18.46	1495/81	3700	3600	6000	3.2	11.0	6.0	7.7	16
163	84	93	4.4	1.1	F102_0185 EZ402U	120	240	18.46	1495/81	3700	3600	6000	2.0	11.0	6.0	7.7	16
221	21	22	1.4	3.8	F102_0135 EZ302U	66	99	13.59	231/17	4000	4000	6500	0.51	11.0	8.0	6.5	13
221	27	29	1.9	2.9	F102_0135 EZ303U	79	99	13.59	231/17	4000	4000	6500	0.62	11.0	8.0	6.5	14
221	37	40	2.5	2.2	F102_0135 EZ401U	105	200	13.59	231/17	4000	4000	6500	1.1	11.0	8.0	6.5	15
221	57	62	3.9	1.4	F102_0135 EZ501U	105	200	13.59	231/17	4000	4000	6500	3.1	11.0	8.0	6.5	16
221	62	69	4.2	1.3	F102_0135 EZ402U	105	200	13.59	231/17	4000	4000	6500	1.8	11.0	8.0	6.5	16
275	17	18	1.6	3.8	F102_0110 EZ302U	53	79	10.92	273/25	4000	4000	6500	0.60	11.0	8.0	6.5	13
275	22	23	2.1	2.9	F102_0110 EZ303U	64	79	10.92	273/25	4000	4000	6500	0.71	11.0	8.0	6.5	14
275	30	32	2.4	2.5	F102_0110 EZ401U	90	200	10.92	273/25	4000	4000	6500	1.2	11.0	8.0	6.5	15
275	46	50	3.7	1.6	F102_0110 EZ501U	105	200	10.92	273/25	4000	4000	6500	3.2	11.0	8.0	6.5	16
275	50	55	4.1	1.5	F102_0110 EZ402U	105	200	10.92	273/25	4000	4000	6500	1.9	11.0	8.0	6.5	16
275	73	91	6.0	1.0	F102_0110 EZ404U	105	200	10.92	273/25	4000	4000	6500	3.3	11.0	8.0	6.5	18
335	14	15	1.8	3.8	F102_0089 EZ302U	43	65	8.948	1029/115	3700	3600	6000	0.73	11.0	8.0	6.5	13
335	18	19	2.3	2.9	F102_0089 EZ303U	52	65	8.948	1029/115	3700	3600	6000	0.84	11.0	8.0	6.5	14
335	24	26	2.3	2.9	F102_0089 EZ401U	74	200	8.948	1029/115	3700	3600	6000	1.4	11.0	8.0	6.5	15
335	37	41	3.6	1.9	F102_0089 EZ501U	105	200	8.948	1029/115	3700	3600	6000	3.3	11.0	8.0	6.5	16
335	41	45	3.9	1.7	F102_0089 EZ402U	105	200	8.948	1029/115	3700	3600	6000	2.1	11.0	8.0	6.5	16
335	60	75	5.8	1.2	F102_0089 EZ404U	105	200	8.948	1029/115	3700	3600	6000	3.4	11.0	8.0	6.5	18
335	64	69	6.2	1.1	F102_0089 EZ502U	105	200	8.948	1029/115	3700	3600	6000	5.6	11.0	8.0	6.5	18
335	64	72	6.2	1.1	F102_0089 EZ701U	105	200	8.948	1029/115	3700	3600	6000	8.9	11.0	8.0	6.5	20
419	11	12	2.0	3.8	F102_0072 EZ302U	35	52	7.156	322/45	3700	3600	6000	0.92	11.0	8.0	6.5	13
419	14	15	2.6	2.9	F102_0072 EZ303U	42	52	7.156	322/45	3700	3600	6000	1.0	11.0	8.0	6.5	14
419	19	21	2.3	3.3	F102_0072 EZ401U	59	200	7.156	322/45	3700	3600	6000	1.6	11.0	8.0	6.5	15
419	30	33	3.5	2.2	F102_0072 EZ501U	105	200	7.156	322/45	3700	3600	6000	3.5	11.0	8.0	6.5	16
419	33	36	3.8	2.0	F102_0072 EZ402U	105	200	7.156	322/45	3700	3600	6000	2.3	11.0	8.0	6.5	16

n_{2N} [rpm]	M_{2N} [Nm]	$M_{2,0}$ [Nm]	a_{th}	S	Type	M_{2acc} [Nm]	M_{2NOT} [Nm]	i	i_{exakt}	n_{1maxDB} EL1,2,3,4 [rpm]	n_{1maxDB} EL5,6 [rpm]	n_{1maxZB} [rpm]	J_1 [kgcm²]	$\Delta\varphi_2$ [arcmin]	$\Delta\varphi_{2redII}$ [arcmin]	C_2 [Nm/ arcmin]	m [kg]
F1 (n_{1N} = 3000 min^{-1}, $M_{2acc,max}$ = 120 Nm)																	
419	48	60	5.6	1.3	F102_0072 EZ404U	105	200	7.156	322/45	3700	3600	6000	3.6	11.0	8.0	6.5	18
419	51	56	6.0	1.3	F102_0072 EZ502U	105	200	7.156	322/45	3700	3600	6000	5.8	11.0	8.0	6.5	18
419	51	58	6.0	1.3	F102_0072 EZ701U	105	200	7.156	322/45	3700	3600	6000	9.1	11.0	8.0	6.5	20
464	18	19	2.2	3.6	F102_0065 EZ401U	53	188	6.462	84/13	3500	3000	6000	1.7	11.0	8.0	6.5	15
464	27	29	3.4	2.3	F102_0065 EZ501U	100	188	6.462	84/13	3500	3000	6000	3.7	11.0	8.0	6.5	16
464	29	33	3.7	2.1	F102_0065 EZ402U	100	188	6.462	84/13	3500	3000	6000	2.4	11.0	8.0	6.5	16
464	43	54	5.5	1.4	F102_0065 EZ404U	105	188	6.462	84/13	3500	3000	6000	3.7	11.0	8.0	6.5	18
464	46	50	5.9	1.3	F102_0065 EZ502U	105	188	6.462	84/13	3500	3000	6000	6.0	11.0	8.0	6.5	18
464	46	52	5.9	1.3	F102_0065 EZ701U	105	188	6.462	84/13	3500	3000	6000	9.3	11.0	8.0	6.5	20
464	61	70	7.7	1.0	F102_0065 EZ503U	105	188	6.462	84/13	3500	3000	6000	8.3	11.0	8.0	6.5	19
696	6.6	7.0	2.6	3.8	F102_0043 EZ302U	21	31	4.308	56/13	3500	3000	6000	1.8	11.0	8.0	6.5	13
696	8.7	9.2	3.3	2.9	F102_0043 EZ303U	25	31	4.308	56/13	3500	3000	6000	1.9	11.0	8.0	6.5	14
696	12	13	2.1	4.7	F102_0043 EZ401U	36	125	4.308	56/13	3500	3000	6000	2.4	11.0	8.0	6.5	15
696	18	20	3.2	3.0	F102_0043 EZ501U	67	125	4.308	56/13	3500	3000	6000	4.4	11.0	8.0	6.5	16
696	20	22	3.5	2.8	F102_0043 EZ402U	67	125	4.308	56/13	3500	3000	6000	3.1	11.0	8.0	6.5	16
696	29	36	5.1	1.9	F102_0043 EZ404U	100	125	4.308	56/13	3500	3000	6000	4.5	11.0	8.0	6.5	18
696	31	33	5.5	1.8	F102_0043 EZ502U	100	125	4.308	56/13	3500	3000	6000	6.7	11.0	8.0	6.5	18
696	31	35	5.5	1.8	F102_0043 EZ701U	84	125	4.308	56/13	3500	3000	6000	10	11.0	8.0	6.5	20
696	41	46	7.2	1.3	F102_0043 EZ503U	100	125	4.308	56/13	3500	3000	6000	9.1	11.0	8.0	6.5	19
F1 (n_{1N} = 6000 min^{-1}, $M_{2acc,max}$ = 120 Nm)																	
43	83	94	1.2	1.5	F102_1400 EZ203U	120	240	139.8	559/4	4000	4000	7000	0.18	11.0	6.0	7.7	13
54	66	75	1.0	1.8	F102_1120 EZ203U	120	240	111.9	2015/18	4000	4000	7000	0.19	11.0	6.0	7.7	13
54	97	103	1.5	1.2	F102_1120 EZ301U	120	240	111.9	2015/18	4000	4000	7000	0.21	11.0	6.0	7.7	13
64	55	63	1.0	2.2	F102_0940 EZ203U	120	240	93.63	7865/84	4000	4000	7000	0.19	11.0	6.0	7.7	13
64	81	86	1.4	1.5	F102_0940 EZ301U	120	240	93.63	7865/84	4000	4000	7000	0.22	11.0	6.0	7.7	13
86	60	65	1.3	1.8	F102_0700 EZ301U	120	240	70.06	1261/18	4000	4000	7000	0.23	11.0	6.0	7.7	13
86	102	114	2.2	1.1	F102_0700 EZ302U	120	240	70.06	1261/18	4000	4000	7000	0.33	11.0	6.0	7.7	13
107	48	52	1.3	2.1	F102_0560 EZ301U	120	240	55.97	2015/36	4000	4000	7000	0.25	11.0	6.0	7.7	13
107	81	91	2.1	1.2	F102_0560 EZ302U	120	240	55.97	2015/36	4000	4000	7000	0.35	11.0	6.0	7.7	13
129	40	43	1.2	2.4	F102_0460 EZ301U	120	240	46.43	325/7	4000	4000	7000	0.28	11.0	6.0	7.7	13
129	68	76	2.1	1.4	F102_0460 EZ302U	120	240	46.43	325/7	4000	4000	7000	0.38	11.0	6.0	7.7	13
129	88	101	2.7	1.1	F102_0460 EZ303U	120	240	46.43	325/7	4000	4000	7000	0.49	11.0	6.0	7.7	14
171	30	32	1.2	2.9	F102_0350 EZ301U	95	240	35.05	3575/102	4000	4000	6500	0.32	11.0	6.0	7.7	13
171	51	57	2.0	1.7	F102_0350 EZ302U	120	240	35.05	3575/102	4000	4000	6500	0.42	11.0	6.0	7.7	13
171	67	76	2.6	1.3	F102_0350 EZ303U	120	240	35.05	3575/102	4000	4000	6500	0.53	11.0	6.0	7.7	14
171	78	95	3.0	1.1	F102_0350 EZ401U	120	240	35.05	3575/102	4000	4000	6500	1.1	11.0	6.0	7.7	15
213	24	26	1.1	3.3	F102_0280 EZ301U	77	205	28.17	169/6	4000	4000	6500	0.37	11.0	6.0	7.7	13
213	41	46	1.9	2.0	F102_0280 EZ302U	120	205	28.17	169/6	4000	4000	6500	0.47	11.0	6.0	7.7	13
213	54	61	2.5	1.5	F102_0280 EZ303U	120	205	28.17	169/6	4000	4000	6500	0.58	11.0	6.0	7.7	14
213	63	77	2.9	1.3	F102_0280 EZ401U	120	240	28.17	169/6	4000	4000	6500	1.1	11.0	6.0	7.7	15
260	20	21	1.1	3.8	F102_0230 EZ301U	63	168	23.08	3185/138	3700	3600	6000	0.43	11.0	6.0	7.7	13
260	34	38	1.8	2.3	F102_0230 EZ302U	112	168	23.08	3185/138	3700	3600	6000	0.53	11.0	6.0	7.7	13
260	44	50	2.4	1.7	F102_0230 EZ303U	120	168	23.08	3185/138	3700	3600	6000	0.64	11.0	6.0	7.7	14
260	51	63	2.8	1.5	F102_0230 EZ401U	120	240	23.08	3185/138	3700	3600	6000	1.2	11.0	6.0	7.7	15
325	16	17	1.1	4.4	F102_0185 EZ301U	50	134	18.46	1495/81	3700	3600	6000	0.52	11.0	6.0	7.7	13
325	27	30	1.8	2.6	F102_0185 EZ302U	90	134	18.46	1495/81	3700	3600	6000	0.62	11.0	6.0	7.7	13
325	35	40	2.3	2.0	F102_0185 EZ303U	107	134	18.46	1495/81	3700	3600	6000	0.73	11.0	6.0	7.7	14
325	41	50	2.7	1.7	F102_0185 EZ401U	120	240	18.46	1495/81	3700	3600	6000	1.3	11.0	6.0	7.7	15
325	61	79	4.0	1.2	F102_0185 EZ501U	120	240	18.46	1495/81	3700	3600	6000	3.2	11.0	6.0	7.7	16
325	63	88	4.2	1.1	F102_0185 EZ402U	120	240	18.46	1495/81	3700	3600	6000	2.0	11.0	6.0	7.7	16
442	20	22	1.7	3.2	F102_0135 EZ302U	66	99	13.59	231/17	4000	4000	6500	0.51	11.0	8.0	6.5	13
442	26	30	2.2	2.5	F102_0135 EZ303U	79	99	13.59	231/17	4000	4000	6500	0.62	11.0	8.0	6.5	14
442	30	37	2.6	2.1	F102_0135 EZ401U	105	200	13.59	231/17	4000	4000	6500	1.1	11.0	8.0	6.5	15
442	45	58	3.8	1.4	F102_0135 EZ501U	105	200	13.59	231/17	4000	4000	6500	3.1	11.0	8.0	6.5	16
442	46	65	4.0	1.4	F102_0135 EZ402U	105	200	13.59	231/17	4000	4000	6500	1.8	11.0	8.0	6.5	16
549	16	18	1.6	3.7	F102_0110 EZ302U	53	79	10.92	273/25	4000	4000	6500	0.60	11.0	8.0	6.5	13
549	21	24	2.1	2.8	F102_0110 EZ303U	64	79	10.92	273/25	4000	4000	6500	0.71	11.0	8.0	6.5	14
549	24	30	2.5	2.4	F102_0110 EZ401U	90	200	10.92	273/25	4000	4000	6500	1.2	11.0	8.0	6.5	15
549	36	47	3.7	1.6	F102_0110 EZ501U	105	200	10.92	273/25	4000	4000	6500	3.2	11.0	8.0	6.5	16
549	37	52	3.8	1.6	F102_0110 EZ402U	105	200	10.92	273/25	4000	4000	6500	1.9	11.0	8.0	6.5	16
549	55	83	5.7	1.1	F102_0110 EZ502U	105	200	10.92	273/25	4000	4000	6500	5.5	11.0	8.0	6.5	18
549	55	84	5.7	1.1	F102_0110 EZ701U	105	200	10.92	273/25	4000	4000	6500	8.8	11.0	8.0	6.5	20
671	13	15	1.7	4.0	F102_0089 EZ302U	43	65	8.948	1029/115	3700	3600	6000	0.73	11.0	8.0	6.5	13
671	17	20	2.2	3.1	F102_0089 EZ303U	52	65	8.948	1029/115	3700	3600	6000	0.84	11.0	8.0	6.5	14

n_{2N} [rpm]	M_{2N} [Nm]	$M_{2,0}$ [Nm]	a_{th}	S	Type	M_{2acc} [Nm]	M_{2NOT} [Nm]	i	i_{exakt}	n_{1maxDB} EL1,2,3,4 [rpm]	n_{1maxDB} EL5,6 [rpm]	n_{1maxZB} [rpm]	J_1 [kgcm²]	$\Delta\varphi_2$ [arcmin]	$\Delta\varphi_{2redII}$ [arcmin]	C_2 [Nm/ arcmin]	m [kg]
F1 (n_{1N} = 6000 min^{-1}, $M_{2acc,max}$ = 120 Nm)																	
671	20	24	2.4	2.8	F102_0089 EZ401U	74	200	8.948	1029/115	3700	3600	6000	1.4	11.0	8.0	6.5	15
671	30	38	3.6	1.9	F102_0089 EZ501U	105	200	8.948	1029/115	3700	3600	6000	3.3	11.0	8.0	6.5	16
671	30	43	3.7	1.8	F102_0089 EZ402U	105	200	8.948	1029/115	3700	3600	6000	2.1	11.0	8.0	6.5	16
671	45	68	5.5	1.2	F102_0089 EZ502U	105	200	8.948	1029/115	3700	3600	6000	5.6	11.0	8.0	6.5	18
671	45	69	5.5	1.2	F102_0089 EZ701U	105	200	8.948	1029/115	3700	3600	6000	8.9	11.0	8.0	6.5	20
671	50	73	6.1	1.1	F102_0089 EZ404U	105	200	8.948	1029/115	3700	3600	6000	3.4	11.0	8.0	6.5	18
671	54	92	6.5	1.0	F102_0089 EZ503U	105	200	8.948	1029/115	3700	3600	6000	8.0	11.0	8.0	6.5	19
838	10	12	1.9	4.0	F102_0072 EZ302U	35	52	7.156	322/45	3700	3600	6000	0.92	11.0	8.0	6.5	13
838	14	16	2.4	3.1	F102_0072 EZ303U	42	52	7.156	322/45	3700	3600	6000	1.0	11.0	8.0	6.5	14
838	16	19	2.3	3.2	F102_0072 EZ401U	59	200	7.156	322/45	3700	3600	6000	1.6	11.0	8.0	6.5	15
838	24	31	3.4	2.2	F102_0072 EZ501U	105	200	7.156	322/45	3700	3600	6000	3.5	11.0	8.0	6.5	16
838	24	34	3.6	2.1	F102_0072 EZ402U	105	200	7.156	322/45	3700	3600	6000	2.3	11.0	8.0	6.5	16
838	36	54	5.3	1.4	F102_0072 EZ502U	105	200	7.156	322/45	3700	3600	6000	5.8	11.0	8.0	6.5	18
838	36	55	5.3	1.4	F102_0072 EZ701U	105	200	7.156	322/45	3700	3600	6000	9.1	11.0	8.0	6.5	20
838	40	58	5.9	1.3	F102_0072 EZ404U	105	200	7.156	322/45	3700	3600	6000	3.6	11.0	8.0	6.5	18
838	43	74	6.3	1.2	F102_0072 EZ503U	105	200	7.156	322/45	3700	3600	6000	8.2	11.0	8.0	6.5	19
929	14	18	2.3	3.4	F102_0065 EZ401U	53	188	6.462	84/13	3500	3000	6000	1.7	11.0	8.0	6.5	15
929	21	28	3.4	2.3	F102_0065 EZ501U	100	188	6.462	84/13	3500	3000	6000	3.7	11.0	8.0	6.5	16
929	22	31	3.5	2.3	F102_0065 EZ402U	100	188	6.462	84/13	3500	3000	6000	2.4	11.0	8.0	6.5	16
929	33	49	5.2	1.5	F102_0065 EZ502U	105	188	6.462	84/13	3500	3000	6000	6.0	11.0	8.0	6.5	18
929	33	50	5.2	1.5	F102_0065 EZ701U	105	188	6.462	84/13	3500	3000	6000	9.3	11.0	8.0	6.5	20
929	36	53	5.8	1.4	F102_0065 EZ404U	105	188	6.462	84/13	3500	3000	6000	3.7	11.0	8.0	6.5	18
929	39	66	6.2	1.3	F102_0065 EZ503U	105	188	6.462	84/13	3500	3000	6000	8.3	11.0	8.0	6.5	19
1393	6.3	7.0	2.4	4.0	F102_0043 EZ302U	21	31	4.308	56/13	3500	3000	6000	1.8	11.0	8.0	6.5	13
1393	8.2	9.4	3.1	3.1	F102_0043 EZ303U	25	31	4.308	56/13	3500	3000	6000	1.9	11.0	8.0	6.5	14
1393	9.6	12	2.1	4.5	F102_0043 EZ401U	36	125	4.308	56/13	3500	3000	6000	2.4	11.0	8.0	6.5	15
1393	14	18	3.2	3.0	F102_0043 EZ501U	67	125	4.308	56/13	3500	3000	6000	4.4	11.0	8.0	6.5	16
1393	15	20	3.3	3.0	F102_0043 EZ402U	67	125	4.308	56/13	3500	3000	6000	3.1	11.0	8.0	6.5	16
1393	22	33	4.8	2.0	F102_0043 EZ502U	100	125	4.308	56/13	3500	3000	6000	6.7	11.0	8.0	6.5	18
1393	22	33	4.8	2.0	F102_0043 EZ701U	84	125	4.308	56/13	3500	3000	6000	10	11.0	8.0	6.5	20
1393	24	35	5.4	1.8	F102_0043 EZ404U	100	125	4.308	56/13	3500	3000	6000	4.5	11.0	8.0	6.5	18
1393	26	44	5.8	1.7	F102_0043 EZ503U	100	125	4.308	56/13	3500	3000	6000	9.1	11.0	8.0	6.5	19
F2 (n_{1N} = 3000 min^{-1}, $M_{2acc,max}$ = 270 Nm)																	
14	198	202	1.2	1.2	F203_2220 EZ301U	270	480	222.2	2444/11	4000	3900	6500	0.25	11.0	7.0	18	24
16	164	167	1.1	1.5	F203_1840 EZ301U	270	480	184.3	16215/88	4000	3900	6500	0.25	11.0	7.0	18	24
21	127	130	1.0	1.9	F202_1410 EZ301U	270	480	140.9	1550/11	4000	3900	6500	0.23	11.0	6.0	18	21
21	217	230	1.7	1.1	F202_1410 EZ302U	270	480	140.9	1550/11	4000	3900	6500	0.33	11.0	6.0	18	22
27	102	104	0.9	2.4	F202_1130 EZ301U	270	480	112.7	1240/11	4000	3900	6500	0.24	11.0	6.0	18	21
27	174	184	1.5	1.4	F202_1130 EZ302U	270	480	112.7	1240/11	4000	3900	6500	0.34	11.0	6.0	18	22
27	226	239	2.0	1.1	F202_1130 EZ303U	270	480	112.7	1240/11	4000	3900	6500	0.45	11.0	6.0	18	22
32	85	86	0.8	2.8	F202_0940 EZ301U	255	480	93.82	1032/11	4000	3900	6500	0.26	11.0	6.0	18	21
32	145	153	1.4	1.7	F202_0940 EZ302U	270	480	93.82	1032/11	4000	3900	6500	0.36	11.0	6.0	18	22
32	188	199	1.8	1.3	F202_0940 EZ303U	270	480	93.82	1032/11	4000	3900	6500	0.47	11.0	6.0	18	22
43	108	114	1.2	2.2	F202_0700 EZ302U	270	435	70.13	5400/77	4000	3900	6500	0.41	11.0	6.0	18	22
43	141	149	1.5	1.7	F202_0700 EZ303U	270	435	70.13	5400/77	4000	3900	6500	0.52	11.0	6.0	18	22
43	190	204	2.1	1.3	F202_0700 EZ401U	270	480	70.13	5400/77	4000	3900	6500	1.1	11.0	6.0	18	23
53	154	165	1.9	1.6	F202_0570 EZ401U	270	480	56.73	624/11	4000	3900	6500	1.1	11.0	6.0	18	23
53	237	259	2.9	1.0	F202_0570 EZ501U	270	480	56.73	624/11	4000	3900	6500	3.1	11.0	6.0	18	24
64	73	77	1.0	3.3	F202_0470 EZ302U	228	342	47.05	1035/22	4000	3900	6500	0.52	11.0	6.0	18	22
64	94	100	1.3	2.5	F202_0470 EZ303U	270	342	47.05	1035/22	4000	3900	6500	0.63	11.0	6.0	18	22
64	128	137	1.7	1.9	F202_0470 EZ401U	270	480	47.05	1035/22	4000	3900	6500	1.2	11.0	6.0	18	23
64	196	214	2.6	1.2	F202_0470 EZ501U	270	480	47.05	1035/22	4000	3900	6500	3.1	11.0	6.0	18	24
64	214	237	2.9	1.1	F202_0470 EZ402U	270	480	47.05	1035/22	4000	3900	6500	1.9	11.0	6.0	18	25
85	55	58	1.0	3.8	F202_0350 EZ302U	172	258	35.46	390/11	3800	3500	6000	0.65	11.0	6.0	18	22
85	71	75	1.3	2.9	F202_0350 EZ303U	206	258	35.46	390/11	3800	3500	6000	0.76	11.0	6.0	18	22
85	96	103	1.6	2.3	F202_0350 EZ401U	270	480	35.46	390/11	3800	3500	6000	1.3	11.0	6.0	18	23
85	148	162	2.5	1.5	F202_0350 EZ501U	270	480	35.46	390/11	3800	3500	6000	3.3	11.0	6.0	18	24
85	162	179	2.7	1.4	F202_0350 EZ402U	270	480	35.46	390/11	3800	3500	6000	2.0	11.0	6.0	18	25
107	76	82	1.6	2.7	F202_0280 EZ401U	232	480	28.11	4020/143	3800	3500	6000	1.4	11.0	6.0	18	23
107	117	128	2.4	1.7	F202_0280 EZ501U	270	480	28.11	4020/143	3800	3500	6000	3.4	11.0	6.0	18	24
107	128	142	2.6	1.6	F202_0280 EZ402U	270	480	28.11	4020/143	3800	3500	6000	2.1	11.0	6.0	18	25
107	188	235	3.9	1.1	F202_0280 EZ404U	270	480	28.11	4020/143	3800	3500	6000	3.5	11.0	6.0	18	27
107	202	218	4.1	1.0	F202_0280 EZ502U	270	480	28.11	4020/143	3800	3500	6000	5.7	11.0	6.0	18	26
107	202	226	4.1	1.0	F202_0280 EZ701U	270	480	28.11	4020/143	3800	3500	6000	9.0	11.0	6.0	18	28

n_{2N} [rpm]	M_{2N} [Nm]	$M_{2,0}$ [Nm]	a_{th}	S	Type	M_{2acc} [Nm]	M_{2NOT} [Nm]	i	i_{exakt}	n_{1maxDB} EL1,2,3,4 [rpm]	n_{1maxDB} EL5,6 [rpm]	n_{1maxZB} [rpm]	J_1 [kgcm²]	$\Delta\varphi_2$ [arcmin]	$\Delta\varphi_{2redII}$ [arcmin]	C_2 [Nm/ arcmin]	m [kg]
F2 (n_{1N} = 3000 min^{-1}, $M_{2acc,max}$ = 270 Nm)																	
128	36	38	1.2	3.8	F202_0230 EZ302U	114	171	23.43	2320/99	3600	3100	6000	0.95	11.0	6.0	18	22
128	47	50	1.6	2.9	F202_0230 EZ303U	136	171	23.43	2320/99	3600	3100	6000	1.1	11.0	6.0	18	22
128	64	68	1.5	3.0	F202_0230 EZ401U	193	480	23.43	2320/99	3600	3100	6000	1.6	11.0	6.0	18	23
128	98	107	2.3	1.9	F202_0230 EZ501U	270	480	23.43	2320/99	3600	3100	6000	3.6	11.0	6.0	18	24
128	107	118	2.5	1.8	F202_0230 EZ402U	270	480	23.43	2320/99	3600	3100	6000	2.3	11.0	6.0	18	25
128	157	195	3.7	1.2	F202_0230 EZ404U	270	480	23.43	2320/99	3600	3100	6000	3.6	11.0	6.0	18	27
128	168	182	4.0	1.1	F202_0230 EZ502U	270	480	23.43	2320/99	3600	3100	6000	5.9	11.0	6.0	18	26
128	168	189	4.0	1.1	F202_0230 EZ701U	270	480	23.43	2320/99	3600	3100	6000	9.2	11.0	6.0	18	28
161	51	54	1.5	3.5	F202_0185 EZ401U	154	480	18.65	6360/341	3600	3100	6000	1.9	11.0	6.0	18	23
161	78	85	2.2	2.3	F202_0185 EZ501U	270	480	18.65	6360/341	3600	3100	6000	3.8	11.0	6.0	18	24
161	85	94	2.5	2.1	F202_0185 EZ402U	270	480	18.65	6360/341	3600	3100	6000	2.6	11.0	6.0	18	25
161	125	156	3.6	1.4	F202_0185 EZ404U	270	480	18.65	6360/341	3600	3100	6000	3.9	11.0	6.0	18	27
161	134	145	3.9	1.3	F202_0185 EZ502U	270	480	18.65	6360/341	3600	3100	6000	6.1	11.0	6.0	18	26
161	134	150	3.9	1.3	F202_0185 EZ701U	270	480	18.65	6360/341	3600	3100	6000	9.4	11.0	6.0	18	28
161	175	201	5.1	1.0	F202_0185 EZ503U	270	480	18.65	6360/341	3600	3100	6000	8.5	11.0	6.0	18	27
220	21	22	1.6	3.8	F202_0135 EZ302U	66	99	13.63	109/8	3800	3500	6000	0.93	11.0	8.0	16	22
220	27	29	2.1	2.9	F202_0135 EZ303U	79	99	13.63	109/8	3800	3500	6000	1.0	11.0	8.0	16	22
220	37	40	1.4	4.3	F202_0135 EZ401U	112	397	13.63	109/8	3800	3500	6000	1.6	11.0	8.0	16	23
220	57	62	2.1	2.8	F202_0135 EZ501U	210	397	13.63	109/8	3800	3500	6000	3.5	11.0	8.0	16	24
220	62	69	2.3	2.6	F202_0135 EZ402U	210	397	13.63	109/8	3800	3500	6000	2.3	11.0	8.0	16	25
220	91	114	3.4	1.7	F202_0135 EZ404U	210	397	13.63	109/8	3800	3500	6000	3.6	11.0	8.0	16	27
220	98	106	3.7	1.6	F202_0135 EZ502U	210	397	13.63	109/8	3800	3500	6000	5.8	11.0	8.0	16	26
220	98	110	3.7	1.6	F202_0135 EZ701U	210	400	13.63	109/8	3800	3500	6000	9.1	11.0	8.0	16	28
220	128	147	4.8	1.2	F202_0135 EZ503U	210	397	13.63	109/8	3800	3500	6000	8.2	11.0	8.0	16	27
220	159	190	5.9	1.0	F202_0135 EZ702U	210	400	13.63	109/8	3800	3500	6000	14	11.0	8.0	16	30
278	45	49	2.0	3.3	F202_0110 EZ501U	168	314	10.80	7303/676	3800	3500	6000	3.8	11.0	8.0	16	24
278	49	54	2.2	3.0	F202_0110 EZ402U	168	314	10.80	7303/676	3800	3500	6000	2.6	11.0	8.0	16	25
278	72	90	3.3	2.0	F202_0110 EZ404U	210	314	10.80	7303/676	3800	3500	6000	3.9	11.0	8.0	16	27
278	78	84	3.5	1.9	F202_0110 EZ502U	210	314	10.80	7303/676	3800	3500	6000	6.1	11.0	8.0	16	26
278	78	87	3.5	1.9	F202_0110 EZ701U	210	400	10.80	7303/676	3800	3500	6000	9.4	11.0	8.0	16	28
278	102	116	4.6	1.4	F202_0110 EZ503U	210	314	10.80	7303/676	3800	3500	6000	8.5	11.0	8.0	16	27
278	126	151	5.7	1.2	F202_0110 EZ702U	210	400	10.80	7303/676	3800	3500	6000	15	11.0	8.0	16	30
278	141	168	6.4	1.0	F202_0110 EZ505U	210	400	10.80	7303/676	3800	3500	6000	13	11.0	8.0	16	30
333	14	15	1.9	3.8	F202_0090 EZ302U	44	66	9.006	3161/351	3600	3100	6000	1.6	11.0	8.0	16	22
333	18	19	2.5	2.9	F202_0090 EZ303U	52	66	9.006	3161/351	3600	3100	6000	1.7	11.0	8.0	16	22
333	38	41	2.0	3.7	F202_0090 EZ501U	140	262	9.006	3161/351	3600	3100	6000	4.2	11.0	8.0	16	24
333	41	45	2.2	3.4	F202_0090 EZ402U	140	262	9.006	3161/351	3600	3100	6000	2.9	11.0	8.0	16	25
333	60	75	3.2	2.3	F202_0090 EZ404U	210	262	9.006	3161/351	3600	3100	6000	4.3	11.0	8.0	16	27
333	65	70	3.4	2.1	F202_0090 EZ502U	210	262	9.006	3161/351	3600	3100	6000	6.5	11.0	8.0	16	26
333	65	73	3.4	2.1	F202_0090 EZ701U	175	400	9.006	3161/351	3600	3100	6000	9.8	11.0	8.0	16	28
333	85	97	4.5	1.6	F202_0090 EZ503U	210	262	9.006	3161/351	3600	3100	6000	8.9	11.0	8.0	16	27
333	105	126	5.6	1.3	F202_0090 EZ702U	210	400	9.006	3161/351	3600	3100	6000	15	11.0	8.0	16	30
333	118	140	6.2	1.2	F202_0090 EZ505U	210	400	9.006	3161/351	3600	3100	6000	13	11.0	8.0	16	30
419	30	33	1.9	4.3	F202_0072 EZ501U	111	209	7.167	5777/806	3600	3100	6000	4.8	11.0	8.0	16	24
419	33	36	2.1	3.9	F202_0072 EZ402U	111	209	7.167	5777/806	3600	3100	6000	3.6	11.0	8.0	16	25
419	48	60	3.1	2.7	F202_0072 EZ404U	167	209	7.167	5777/806	3600	3100	6000	4.9	11.0	8.0	16	27
419	51	56	3.3	2.5	F202_0072 EZ502U	167	209	7.167	5777/806	3600	3100	6000	7.1	11.0	8.0	16	26
419	51	58	3.3	2.5	F202_0072 EZ701U	139	400	7.167	5777/806	3600	3100	6000	10	11.0	8.0	16	28
419	67	77	4.3	1.9	F202_0072 EZ503U	167	209	7.167	5777/806	3600	3100	6000	9.5	11.0	8.0	16	27
419	83	100	5.3	1.5	F202_0072 EZ702U	210	400	7.167	5777/806	3600	3100	6000	16	11.0	8.0	16	30
419	94	111	6.0	1.4	F202_0072 EZ505U	210	400	7.167	5777/806	3600	3100	6000	14	11.0	8.0	16	30
419	115	145	7.3	1.1	F202_0072 EZ703U	210	400	7.167	5777/806	3600	3100	6000	24	11.0	8.0	16	32
540	40	45	3.2	3.0	F202_0056 EZ701U	108	400	5.552	5341/962	3100	2600	5000	12	11.0	8.0	16	28
540	65	78	5.1	1.8	F202_0056 EZ702U	210	400	5.552	5341/962	3100	2600	5000	17	11.0	8.0	16	30
540	73	86	5.8	1.6	F202_0056 EZ505U	210	400	5.552	5341/962	3100	2600	5000	15	11.0	8.0	16	30
540	89	112	7.0	1.3	F202_0056 EZ703U	210	400	5.552	5341/962	3100	2600	5000	25	11.0	8.0	16	32
641	31	39	2.9	3.5	F202_0047 EZ404U	109	136	4.680	2616/559	3100	2600	5000	7.0	11.0	8.0	16	27
641	34	36	3.1	3.2	F202_0047 EZ502U	109	136	4.680	2616/559	3100	2600	5000	9.3	11.0	8.0	16	26
641	34	38	3.1	3.3	F202_0047 EZ701U	91	340	4.680	2616/559	3100	2600	5000	13	11.0	8.0	16	28
641	44	50	4.1	2.5	F202_0047 EZ503U	109	136	4.680	2616/559	3100	2600	5000	12	11.0	8.0	16	27
641	54	65	5.0	2.0	F202_0047 EZ702U	186	340	4.680	2616/559	3100	2600	5000	18	11.0	8.0	16	30
641	61	73	5.6	1.8	F202_0047 EZ505U	210	340	4.680	2616/559	3100	2600	5000	16	11.0	8.0	16	30
641	75	94	6.8	1.5	F202_0047 EZ703U	210	340	4.680	2616/559	3100	2600	5000	26	11.0	8.0	16	32

n_{2N} [rpm]	M_{2N} [Nm]	$M_{2,0}$ [Nm]	a_{th}	S	Type	M_{2acc} [Nm]	M_{2NOT} [Nm]	i	i_{exakt}	n_{1maxDB} EL1,2,3,4 [rpm]	n_{1maxDB} EL5,6 [rpm]	n_{1maxZB} [rpm]	J_1 [kgcm²]	$\Delta\varphi_2$ [arcmin]	$\Delta\varphi_{2redII}$ [arcmin]	C_2 [Nm/ arcmin]	m [kg]
F2 (n_{1N} = 4500 min^{-1}, $M_{2acc,max}$ = 210 Nm)																	
330	126	202	5.4	1.1	F202_0135 EZ505U	210	400	13.63	109/8	3800	3500	6000	13	11.0	8.0	16	30
417	100	160	5.2	1.3	F202_0110 EZ505U	210	400	10.80	7303/676	3800	3500	6000	13	11.0	8.0	16	30
417	127	210	6.6	1.0	F202_0110 EZ703U	210	400	10.80	7303/676	3800	3500	6000	23	11.0	8.0	16	32
500	83	134	5.0	1.5	F202_0090 EZ505U	210	400	9.006	3161/351	3600	3100	6000	13	11.0	8.0	16	30
500	106	175	6.4	1.1	F202_0090 EZ703U	210	400	9.006	3161/351	3600	3100	6000	23	11.0	8.0	16	32
628	66	106	4.8	1.7	F202_0072 EZ505U	210	400	7.167	5777/806	3600	3100	6000	14	11.0	8.0	16	30
628	84	139	6.2	1.3	F202_0072 EZ703U	210	400	7.167	5777/806	3600	3100	6000	24	11.0	8.0	16	32
811	51	82	4.6	2.0	F202_0056 EZ505U	210	400	5.552	5341/962	3100	2600	5000	15	11.0	8.0	16	30
811	65	108	5.9	1.6	F202_0056 EZ703U	210	400	5.552	5341/962	3100	2600	5000	25	11.0	8.0	16	32
962	43	69	4.5	2.3	F202_0047 EZ505U	210	340	4.680	2616/559	3100	2600	5000	16	11.0	8.0	16	30
962	55	91	5.7	1.8	F202_0047 EZ703U	210	340	4.680	2616/559	3100	2600	5000	26	11.0	8.0	16	32
F2 (n_{1N} = 6000 min^{-1}, $M_{2acc,max}$ = 270 Nm)																	
43	205	230	1.6	1.2	F202_1410 EZ302U	270	480	140.9	1550/11	4000	3900	6500	0.33	11.0	6.0	18	22
53	164	184	1.4	1.5	F202_1130 EZ302U	270	480	112.7	1240/11	4000	3900	6500	0.34	11.0	6.0	18	22
53	214	246	1.9	1.1	F202_1130 EZ303U	270	480	112.7	1240/11	4000	3900	6500	0.45	11.0	6.0	18	22
64	137	153	1.3	1.8	F202_0940 EZ302U	270	480	93.82	1032/11	4000	3900	6500	0.36	11.0	6.0	18	22
64	178	205	1.7	1.3	F202_0940 EZ303U	270	480	93.82	1032/11	4000	3900	6500	0.47	11.0	6.0	18	22
64	209	255	2.0	1.1	F202_0940 EZ401U	270	480	93.82	1032/11	4000	3900	6500	1.0	11.0	6.0	18	23
86	102	114	1.2	2.1	F202_0700 EZ302U	270	435	70.13	5400/77	4000	3900	6500	0.41	11.0	6.0	18	22
86	133	153	1.6	1.6	F202_0700 EZ303U	270	435	70.13	5400/77	4000	3900	6500	0.52	11.0	6.0	18	22
86	156	190	1.9	1.4	F202_0700 EZ401U	270	480	70.13	5400/77	4000	3900	6500	1.1	11.0	6.0	18	23
106	127	154	1.8	1.6	F202_0570 EZ401U	270	480	56.73	624/11	4000	3900	6500	1.1	11.0	6.0	18	23
106	187	242	2.7	1.1	F202_0570 EZ501U	270	480	56.73	624/11	4000	3900	6500	3.1	11.0	6.0	18	24
106	193	270	2.8	1.1	F202_0570 EZ402U	270	480	56.73	624/11	4000	3900	6500	1.8	11.0	6.0	18	25
128	68	77	1.2	2.8	F202_0470 EZ302U	228	342	47.05	1035/22	4000	3900	6500	0.52	11.0	6.0	18	22
128	89	103	1.5	2.1	F202_0470 EZ303U	270	342	47.05	1035/22	4000	3900	6500	0.63	11.0	6.0	18	22
128	105	128	1.8	1.8	F202_0470 EZ401U	270	480	47.05	1035/22	4000	3900	6500	1.2	11.0	6.0	18	23
128	155	201	2.6	1.2	F202_0470 EZ501U	270	480	47.05	1035/22	4000	3900	6500	3.1	11.0	6.0	18	24
128	160	224	2.7	1.2	F202_0470 EZ402U	270	480	47.05	1035/22	4000	3900	6500	1.9	11.0	6.0	18	25
169	52	58	1.1	3.4	F202_0350 EZ302U	172	258	35.46	390/11	3800	3500	6000	0.65	11.0	6.0	18	22
169	67	77	1.4	2.6	F202_0350 EZ303U	206	258	35.46	390/11	3800	3500	6000	0.76	11.0	6.0	18	22
169	79	96	1.7	2.2	F202_0350 EZ401U	270	480	35.46	390/11	3800	3500	6000	1.3	11.0	6.0	18	23
169	117	151	2.5	1.5	F202_0350 EZ501U	270	480	35.46	390/11	3800	3500	6000	3.3	11.0	6.0	18	24
169	120	169	2.6	1.4	F202_0350 EZ402U	270	480	35.46	390/11	3800	3500	6000	2.0	11.0	6.0	18	25
213	63	76	1.6	2.6	F202_0280 EZ401U	232	480	28.11	4020/143	3800	3500	6000	1.4	11.0	6.0	18	23
213	93	120	2.4	1.7	F202_0280 EZ501U	270	480	28.11	4020/143	3800	3500	6000	3.4	11.0	6.0	18	24
213	95	134	2.5	1.7	F202_0280 EZ402U	270	480	28.11	4020/143	3800	3500	6000	2.1	11.0	6.0	18	25
213	142	213	3.7	1.1	F202_0280 EZ502U	270	480	28.11	4020/143	3800	3500	6000	5.7	11.0	6.0	18	26
213	142	215	3.7	1.1	F202_0280 EZ701U	270	480	28.11	4020/143	3800	3500	6000	9.0	11.0	6.0	18	28
213	158	229	4.1	1.0	F202_0280 EZ404U	270	480	28.11	4020/143	3800	3500	6000	3.5	11.0	6.0	18	27
256	34	38	1.1	4.0	F202_0230 EZ302U	114	171	23.43	2320/99	3600	3100	6000	0.95	11.0	6.0	18	22
256	45	51	1.5	3.1	F202_0230 EZ303U	136	171	23.43	2320/99	3600	3100	6000	1.1	11.0	6.0	18	22
256	52	64	1.6	2.9	F202_0230 EZ401U	193	480	23.43	2320/99	3600	3100	6000	1.6	11.0	6.0	18	23
256	77	100	2.3	2.0	F202_0230 EZ501U	270	480	23.43	2320/99	3600	3100	6000	3.6	11.0	6.0	18	24
256	80	111	2.4	1.9	F202_0230 EZ402U	270	480	23.43	2320/99	3600	3100	6000	2.3	11.0	6.0	18	25
256	118	177	3.6	1.3	F202_0230 EZ502U	270	480	23.43	2320/99	3600	3100	6000	5.9	11.0	6.0	18	26
256	118	180	3.6	1.3	F202_0230 EZ701U	270	480	23.43	2320/99	3600	3100	6000	9.2	11.0	6.0	18	28
256	132	191	4.0	1.1	F202_0230 EZ404U	270	480	23.43	2320/99	3600	3100	6000	3.6	11.0	6.0	18	27
256	141	241	4.2	1.1	F202_0230 EZ503U	270	480	23.43	2320/99	3600	3100	6000	8.2	11.0	6.0	18	27
322	42	51	1.5	3.4	F202_0185 EZ401U	154	480	18.65	6360/341	3600	3100	6000	1.9	11.0	6.0	18	23
322	62	80	2.2	2.3	F202_0185 EZ501U	270	480	18.65	6360/341	3600	3100	6000	3.8	11.0	6.0	18	24
322	63	89	2.3	2.2	F202_0185 EZ402U	270	480	18.65	6360/341	3600	3100	6000	2.6	11.0	6.0	18	25
322	94	141	3.4	1.5	F202_0185 EZ502U	270	480	18.65	6360/341	3600	3100	6000	6.1	11.0	6.0	18	26
322	94	143	3.4	1.5	F202_0185 EZ701U	270	480	18.65	6360/341	3600	3100	6000	9.4	11.0	6.0	18	28
322	105	152	3.8	1.3	F202_0185 EZ404U	270	480	18.65	6360/341	3600	3100	6000	3.9	11.0	6.0	18	27
322	112	192	4.1	1.2	F202_0185 EZ503U	270	480	18.65	6360/341	3600	3100	6000	8.5	11.0	6.0	18	27
322	130	259	4.7	1.1	F202_0185 EZ702U	270	480	18.65	6360/341	3600	3100	6000	15	11.0	6.0	18	30
440	20	22	1.5	4.0	F202_0135 EZ302U	66	99	13.63	109/8	3800	3500	6000	0.93	11.0	8.0	16	22
440	26	30	1.9	3.1	F202_0135 EZ303U	79	99	13.63	109/8	3800	3500	6000	1.0	11.0	8.0	16	22
440	30	37	1.4	4.2	F202_0135 EZ401U	112	397	13.63	109/8	3800	3500	6000	1.6	11.0	8.0	16	23
440	45	58	2.1	2.8	F202_0135 EZ501U	210	397	13.63	109/8	3800	3500	6000	3.5	11.0	8.0	16	24
440	46	65	2.2	2.7	F202_0135 EZ402U	210	397	13.63	109/8	3800	3500	6000	2.3	11.0	8.0	16	25
440	69	103	3.2	1.8	F202_0135 EZ502U	210	397	13.63	109/8	3800	3500	6000	5.8	11.0	8.0	16	26
440	69	104	3.2	1.8	F202_0135 EZ701U	210	400	13.63	109/8	3800	3500	6000	9.1	11.0	8.0	16	28

n_{2N} [rpm]	M_{2N} [Nm]	$M_{2,0}$ [Nm]	a_{th}	S	Type	M_{2acc} [Nm]	M_{2NOT} [Nm]	i	i_{exakt}	n_{1maxDB} EL1,2,3,4 [rpm]	n_{1maxDB} EL5,6 [rpm]	n_{1maxZB} [rpm]	J_1 [kgcm²]	$\Delta\varphi_2$ [arcmin]	$\Delta\varphi_{2redII}$ [arcmin]	C_2 [Nm/ arcmin]	m [kg]
F2 (n_{1N} = 6000 min^{-1}, $M_{2acc,max}$ = 270 Nm)																	
440	77	111	3.6	1.6	F202_0135 EZ404U	210	397	13.63	109/8	3800	3500	6000	3.6	11.0	8.0	16	27
440	82	140	3.9	1.5	F202_0135 EZ503U	210	397	13.63	109/8	3800	3500	6000	8.2	11.0	8.0	16	27
440	95	189	4.5	1.3	F202_0135 EZ702U	210	400	13.63	109/8	3800	3500	6000	14	11.0	8.0	16	30
555	24	29	1.4	4.8	F202_0110 EZ401U	89	314	10.80	7303/676	3800	3500	6000	1.9	11.0	8.0	16	23
555	36	46	2.0	3.3	F202_0110 EZ501U	168	314	10.80	7303/676	3800	3500	6000	3.8	11.0	8.0	16	24
555	37	51	2.1	3.2	F202_0110 EZ402U	168	314	10.80	7303/676	3800	3500	6000	2.6	11.0	8.0	16	25
555	54	82	3.1	2.1	F202_0110 EZ502U	210	314	10.80	7303/676	3800	3500	6000	6.1	11.0	8.0	16	26
555	54	83	3.1	2.1	F202_0110 EZ701U	210	400	10.80	7303/676	3800	3500	6000	9.4	11.0	8.0	16	28
555	61	88	3.5	1.9	F202_0110 EZ404U	210	314	10.80	7303/676	3800	3500	6000	3.9	11.0	8.0	16	27
555	65	111	3.7	1.8	F202_0110 EZ503U	210	314	10.80	7303/676	3800	3500	6000	8.5	11.0	8.0	16	27
555	75	150	4.3	1.5	F202_0110 EZ702U	210	400	10.80	7303/676	3800	3500	6000	15	11.0	8.0	16	30
666	13	15	1.8	4.0	F202_0090 EZ302U	44	66	9.006	3161/351	3600	3100	6000	1.6	11.0	8.0	16	22
666	17	20	2.4	3.1	F202_0090 EZ303U	52	66	9.006	3161/351	3600	3100	6000	1.7	11.0	8.0	16	22
666	30	38	2.0	3.7	F202_0090 EZ501U	140	262	9.006	3161/351	3600	3100	6000	4.2	11.0	8.0	16	24
666	31	43	2.0	3.6	F202_0090 EZ402U	140	262	9.006	3161/351	3600	3100	6000	2.9	11.0	8.0	16	25
666	45	68	3.0	2.4	F202_0090 EZ502U	210	262	9.006	3161/351	3600	3100	6000	6.5	11.0	8.0	16	26
666	45	69	3.0	2.4	F202_0090 EZ701U	175	400	9.006	3161/351	3600	3100	6000	9.8	11.0	8.0	16	28
666	51	73	3.4	2.2	F202_0090 EZ404U	210	262	9.006	3161/351	3600	3100	6000	4.3	11.0	8.0	16	27
666	54	93	3.6	2.0	F202_0090 EZ503U	210	262	9.006	3161/351	3600	3100	6000	8.9	11.0	8.0	16	27
666	63	125	4.2	1.7	F202_0090 EZ702U	210	400	9.006	3161/351	3600	3100	6000	15	11.0	8.0	16	30
837	24	31	1.9	4.3	F202_0072 EZ501U	111	209	7.167	5777/806	3600	3100	6000	4.8	11.0	8.0	16	24
837	24	34	2.0	4.2	F202_0072 EZ402U	111	209	7.167	5777/806	3600	3100	6000	3.6	11.0	8.0	16	25
837	36	54	2.9	2.8	F202_0072 EZ502U	167	209	7.167	5777/806	3600	3100	6000	7.1	11.0	8.0	16	26
837	36	55	2.9	2.8	F202_0072 EZ701U	139	400	7.167	5777/806	3600	3100	6000	10	11.0	8.0	16	28
837	40	58	3.3	2.5	F202_0072 EZ404U	167	209	7.167	5777/806	3600	3100	6000	4.9	11.0	8.0	16	27
837	43	74	3.5	2.4	F202_0072 EZ503U	167	209	7.167	5777/806	3600	3100	6000	9.5	11.0	8.0	16	27
837	50	99	4.0	2.0	F202_0072 EZ702U	210	400	7.167	5777/806	3600	3100	6000	16	11.0	8.0	16	30
F3 (n_{1N} = 3000 min^{-1}, $M_{2acc,max}$ = 450 Nm)																	
14	336	355	1.4	1.2	F303_2210 EZ302U	450	800	221.2	191149/864	4000	3900	6500	0.36	11.0	7.0	22	34
16	281	297	1.2	1.4	F303_1850 EZ302U	450	800	184.8	29939/162	4000	3900	6500	0.37	11.0	7.0	22	34
16	366	387	1.6	1.1	F303_1850 EZ303U	450	800	184.8	29939/162	4000	3900	6500	0.48	11.0	7.0	22	35
21	217	229	1.1	1.8	F302_1410 EZ302U	450	603	140.6	7595/54	4000	3900	6500	0.37	11.0	6.0	22	29
21	282	299	1.4	1.4	F302_1410 EZ303U	450	603	140.6	7595/54	4000	3900	6500	0.48	11.0	6.0	22	30
21	382	409	1.9	1.0	F302_1410 EZ401U	450	603	140.6	7595/54	4000	3900	6500	1.0	11.0	6.0	22	31
27	306	328	1.7	1.3	F302_1130 EZ401U	450	800	112.8	3724/33	4000	3900	6500	1.0	11.0	6.0	22	31
32	254	273	1.6	1.6	F302_0940 EZ401U	450	800	93.64	4214/45	4000	3900	6500	1.1	11.0	6.0	22	31
32	391	427	2.4	1.0	F302_0940 EZ501U	450	800	93.64	4214/45	4000	3900	6500	3.1	11.0	6.0	22	32
43	191	205	1.4	2.1	F302_0700 EZ401U	450	800	70.36	2744/39	4000	3900	6500	1.2	11.0	6.0	22	31
43	293	321	2.1	1.4	F302_0700 EZ501U	450	800	70.36	2744/39	4000	3900	6500	3.2	11.0	6.0	22	32
43	321	355	2.3	1.2	F302_0700 EZ402U	450	800	70.36	2744/39	4000	3900	6500	1.9	11.0	6.0	22	32
53	153	164	1.2	2.6	F302_0560 EZ401U	450	800	56.49	4067/72	4000	3900	6500	1.3	11.0	6.0	22	31
53	236	258	1.9	1.7	F302_0560 EZ501U	450	800	56.49	4067/72	4000	3900	6500	3.3	11.0	6.0	22	32
53	258	285	2.1	1.6	F302_0560 EZ402U	450	800	56.49	4067/72	4000	3900	6500	2.0	11.0	6.0	22	32
53	378	471	3.0	1.1	F302_0560 EZ404U	450	800	56.49	4067/72	4000	3900	6500	3.3	11.0	6.0	22	34
64	128	137	1.1	3.1	F302_0470 EZ401U	389	800	47.19	1274/27	4000	3900	6500	1.4	11.0	6.0	22	31
64	197	215	1.7	2.0	F302_0470 EZ501U	450	800	47.19	1274/27	4000	3900	6500	3.4	11.0	6.0	22	32
64	215	238	1.9	1.9	F302_0470 EZ402U	450	800	47.19	1274/27	4000	3900	6500	2.1	11.0	6.0	22	32
64	316	394	2.8	1.3	F302_0470 EZ404U	450	800	47.19	1274/27	4000	3900	6500	3.5	11.0	6.0	22	34
64	339	366	3.0	1.2	F302_0470 EZ502U	450	800	47.19	1274/27	4000	3900	6500	5.7	11.0	6.0	22	34
64	339	380	3.0	1.2	F302_0470 EZ701U	450	800	47.19	1274/27	4000	3900	6500	9.0	11.0	6.0	22	35
86	95	102	1.1	3.8	F302_0350 EZ401U	289	800	35.03	7252/207	3700	3500	5500	1.7	11.0	6.0	22	31
86	146	160	1.6	2.5	F302_0350 EZ501U	450	800	35.03	7252/207	3700	3500	5500	3.6	11.0	6.0	22	32
86	160	177	1.8	2.3	F302_0350 EZ402U	450	800	35.03	7252/207	3700	3500	5500	2.4	11.0	6.0	22	32
86	234	292	2.6	1.5	F302_0350 EZ404U	450	800	35.03	7252/207	3700	3500	5500	3.7	11.0	6.0	22	34
86	251	272	2.8	1.4	F302_0350 EZ502U	450	800	35.03	7252/207	3700	3500	5500	5.9	11.0	6.0	22	34
86	251	282	2.8	1.4	F302_0350 EZ701U	450	800	35.03	7252/207	3700	3500	5500	9.2	11.0	6.0	22	35
86	330	377	3.7	1.1	F302_0350 EZ503U	450	800	35.03	7252/207	3700	3500	5500	8.3	11.0	6.0	22	35
106	77	82	1.0	4.4	F302_0280 EZ401U	233	800	28.23	6860/243	3700	3500	5500	2.0	11.0	6.0	22	31
106	118	129	1.6	2.9	F302_0280 EZ501U	438	800	28.23	6860/243	3700	3500	5500	3.9	11.0	6.0	22	32
106	129	142	1.7	2.6	F302_0280 EZ402U	438	800	28.23	6860/243	3700	3500	5500	2.7	11.0	6.0	22	32
106	189	235	2.5	1.8	F302_0280 EZ404U	450	800	28.23	6860/243	3700	3500	5500	4.0	11.0	6.0	22	34
106	203	219	2.7	1.7	F302_0280 EZ502U	450	800	28.23	6860/243	3700	3500	5500	6.2	11.0	6.0	22	34
106	203	227	2.7	1.7	F302_0280 EZ701U	450	800	28.23	6860/243	3700	3500	5500	9.5	11.0	6.0	22	35
106	266	304	3.6	1.3	F302_0280 EZ503U	450	800	28.23	6860/243	3700	3500	5500	8.6	11.0	6.0	22	35

n_{2N} [rpm]	M_{2N} [Nm]	$M_{2,0}$ [Nm]	a_{th}	S	Type	M_{2acc} [Nm]	M_{2NOT} [Nm]	i	i_{exakt}	n_{1maxDB} EL1,2,3,4 [rpm]	n_{1maxDB} EL5,6 [rpm]	n_{1maxZB} [rpm]	J_1 [kgcm²]	$\Delta\varphi_2$ [arcmin]	$\Delta\varphi_{2redII}$ [arcmin]	C_2 [Nm/ arcmin]	m [kg]
F3 (n_{1N} = 3000 min^{-1}, $M_{2acc,max}$ = 450 Nm)																	
106	329	394	4.4	1.0	F302_0280 EZ702U	450	800	28.23	6860/243	3700	3500	5500	15	11.0	6.0	22	38
128	64	68	1.0	5.0	F302_0240 EZ401U	194	685	23.52	588/25	3500	3100	5000	2.3	11.0	6.0	22	31
128	98	107	1.5	3.2	F302_0240 EZ501U	365	685	23.52	588/25	3500	3100	5000	4.3	11.0	6.0	22	32
128	107	119	1.7	3.0	F302_0240 EZ402U	365	685	23.52	588/25	3500	3100	5000	3.0	11.0	6.0	22	32
128	157	196	2.5	2.0	F302_0240 EZ404U	450	685	23.52	588/25	3500	3100	5000	4.4	11.0	6.0	22	34
128	169	183	2.6	1.9	F302_0240 EZ502U	450	685	23.52	588/25	3500	3100	5000	6.6	11.0	6.0	22	34
128	169	189	2.6	1.9	F302_0240 EZ701U	450	800	23.52	588/25	3500	3100	5000	9.9	11.0	6.0	22	35
128	221	253	3.5	1.4	F302_0240 EZ503U	450	685	23.52	588/25	3500	3100	5000	9.0	11.0	6.0	22	35
128	274	329	4.3	1.2	F302_0240 EZ702U	450	800	23.52	588/25	3500	3100	5000	15	11.0	6.0	22	38
128	308	365	4.8	1.0	F302_0240 EZ505U	450	800	23.52	588/25	3500	3100	5000	14	11.0	6.0	22	38
160	135	151	2.5	2.2	F302_0190 EZ701U	364	800	18.77	4900/261	3500	3100	5000	10	11.0	6.0	22	35
160	219	262	4.1	1.3	F302_0190 EZ702U	450	800	18.77	4900/261	3500	3100	5000	16	11.0	6.0	22	38
160	246	291	4.6	1.2	F302_0190 EZ505U	450	800	18.77	4900/261	3500	3100	5000	14	11.0	6.0	22	38
224	56	61	1.4	4.7	F302_0135 EZ501U	208	390	13.38	7696/575	3700	3500	5500	4.2	11.0	8.0	20	32
224	61	68	1.5	4.3	F302_0135 EZ402U	208	390	13.38	7696/575	3700	3500	5500	2.9	11.0	8.0	20	32
224	90	112	2.2	2.9	F302_0135 EZ404U	312	390	13.38	7696/575	3700	3500	5500	4.3	11.0	8.0	20	34
224	96	104	2.4	2.7	F302_0135 EZ502U	312	390	13.38	7696/575	3700	3500	5500	6.5	11.0	8.0	20	34
224	96	108	2.4	2.7	F302_0135 EZ701U	260	650	13.38	7696/575	3700	3500	5500	9.8	11.0	8.0	20	35
224	126	144	3.1	2.1	F302_0135 EZ503U	312	390	13.38	7696/575	3700	3500	5500	8.9	11.0	8.0	20	35
224	156	187	3.9	1.7	F302_0135 EZ702U	350	650	13.38	7696/575	3700	3500	5500	15	11.0	8.0	20	38
224	175	208	4.4	1.5	F302_0135 EZ505U	350	650	13.38	7696/575	3700	3500	5500	13	11.0	8.0	20	38
224	214	270	5.3	1.2	F302_0135 EZ703U	350	650	13.38	7696/575	3700	3500	5500	23	11.0	8.0	20	40
278	49	54	1.5	5.0	F302_0110 EZ402U	167	314	10.79	1456/135	3700	3500	5500	3.5	11.0	8.0	20	32
278	72	90	2.2	3.4	F302_0110 EZ404U	251	314	10.79	1456/135	3700	3500	5500	4.9	11.0	8.0	20	34
278	77	84	2.3	3.2	F302_0110 EZ502U	251	314	10.79	1456/135	3700	3500	5500	7.1	11.0	8.0	20	34
278	77	87	2.3	3.2	F302_0110 EZ701U	209	650	10.79	1456/135	3700	3500	5500	10	11.0	8.0	20	35
278	101	116	3.0	2.4	F302_0110 EZ503U	251	314	10.79	1456/135	3700	3500	5500	9.5	11.0	8.0	20	35
278	126	151	3.7	2.0	F302_0110 EZ702U	350	650	10.79	1456/135	3700	3500	5500	16	11.0	8.0	20	38
278	141	167	4.2	1.7	F302_0110 EZ505U	350	650	10.79	1456/135	3700	3500	5500	14	11.0	8.0	20	38
278	173	218	5.2	1.4	F302_0110 EZ703U	350	650	10.79	1456/135	3700	3500	5500	24	11.0	8.0	20	40
334	60	75	2.3	3.5	F302_0090 EZ404U	209	262	8.986	5616/625	3500	3100	5000	5.6	11.0	8.0	20	34
334	65	70	2.5	3.2	F302_0090 EZ502U	209	262	8.986	5616/625	3500	3100	5000	7.8	11.0	8.0	20	34
334	65	72	2.2	3.6	F302_0090 EZ701U	174	650	8.986	5616/625	3500	3100	5000	11	11.0	8.0	20	35
334	85	97	3.2	2.5	F302_0090 EZ503U	209	262	8.986	5616/625	3500	3100	5000	10	11.0	8.0	20	35
334	105	126	3.6	2.2	F302_0090 EZ702U	350	650	8.986	5616/625	3500	3100	5000	16	11.0	8.0	20	38
334	118	139	4.1	2.0	F302_0090 EZ505U	350	650	8.986	5616/625	3500	3100	5000	15	11.0	8.0	20	38
334	144	181	5.0	1.6	F302_0090 EZ703U	350	650	8.986	5616/625	3500	3100	5000	24	11.0	8.0	20	40
418	51	58	2.2	4.2	F302_0072 EZ701U	139	522	7.172	208/29	3500	3100	5000	12	11.0	8.0	20	35
418	83	100	3.5	2.6	F302_0072 EZ702U	285	522	7.172	208/29	3500	3100	5000	18	11.0	8.0	20	38
418	94	111	3.9	2.3	F302_0072 EZ505U	350	522	7.172	208/29	3500	3100	5000	16	11.0	8.0	20	38
418	115	145	4.8	1.9	F302_0072 EZ703U	350	522	7.172	208/29	3500	3100	5000	25	11.0	8.0	20	40
524	41	46	2.1	4.8	F302_0057 EZ701U	111	416	5.720	143/25	3000	2600	4500	14	11.0	8.0	20	35
524	67	80	3.4	3.0	F302_0057 EZ702U	227	416	5.720	143/25	3000	2600	4500	19	11.0	8.0	20	38
524	75	89	3.8	2.6	F302_0057 EZ505U	333	416	5.720	143/25	3000	2600	4500	18	11.0	8.0	20	38
524	92	115	4.6	2.2	F302_0057 EZ703U	333	416	5.720	143/25	3000	2600	4500	27	11.0	8.0	20	40
646	54	65	3.3	3.4	F302_0046 EZ702U	185	338	4.644	4992/1075	3000	2600	4500	22	11.0	8.0	20	38
646	61	72	3.7	3.0	F302_0046 EZ505U	270	338	4.644	4992/1075	3000	2600	4500	20	11.0	8.0	20	38
646	74	94	4.5	2.5	F302_0046 EZ703U	270	338	4.644	4992/1075	3000	2600	4500	30	11.0	8.0	20	40
646	96	136	5.8	1.9	F302_0046 EZ705U	349	650	4.644	4992/1075	3000	2600	4500	42	11.0	8.0	20	45
F3 (n_{1N} = 4500 min^{-1}, $M_{2acc,max}$ = 450 Nm)																	
159	260	419	4.0	1.1	F302_0280 EZ505U	450	800	28.23	6860/243	3700	3500	5500	13	11.0	6.0	22	38
191	217	349	3.9	1.3	F302_0240 EZ505U	450	800	23.52	588/25	3500	3100	5000	14	11.0	6.0	22	38
191	276	456	4.9	1.0	F302_0240 EZ703U	450	800	23.52	588/25	3500	3100	5000	23	11.0	6.0	22	40
240	173	279	3.7	1.5	F302_0190 EZ505U	450	800	18.77	4900/261	3500	3100	5000	14	11.0	6.0	22	38
240	220	364	4.7	1.2	F302_0190 EZ703U	450	800	18.77	4900/261	3500	3100	5000	24	11.0	6.0	22	40
336	123	199	3.5	1.9	F302_0135 EZ505U	350	650	13.38	7696/575	3700	3500	5500	13	11.0	8.0	20	38
336	157	260	4.5	1.5	F302_0135 EZ703U	350	650	13.38	7696/575	3700	3500	5500	23	11.0	8.0	20	40
417	99	160	3.4	2.2	F302_0110 EZ505U	350	650	10.79	1456/135	3700	3500	5500	14	11.0	8.0	20	38
417	127	209	4.3	1.7	F302_0110 EZ703U	350	650	10.79	1456/135	3700	3500	5500	24	11.0	8.0	20	40
501	83	133	3.3	2.4	F302_0090 EZ505U	350	650	8.986	5616/625	3500	3100	5000	15	11.0	8.0	20	38
501	105	174	4.2	1.9	F302_0090 EZ703U	350	650	8.986	5616/625	3500	3100	5000	24	11.0	8.0	20	40
627	66	106	3.2	2.8	F302_0072 EZ505U	350	522	7.172	208/29	3500	3100	5000	16	11.0	8.0	20	38
627	84	139	4.0	2.2	F302_0072 EZ703U	350	522	7.172	208/29	3500	3100	5000	25	11.0	8.0	20	40
787	53	85	3.1	3.3	F302_0057 EZ505U	333	416	5.720	143/25	3000	2600	4500	18	11.0	8.0	20	38

n_{2N} [rpm]	M_{2N} [Nm]	$M_{2,0}$ [Nm]	a_{th}	S	Type	M_{2acc} [Nm]	M_{2NOT} [Nm]	i	i_{exakt}	n_{1maxDB} EL1,2,3,4 [rpm]	n_{1maxDB} EL5,6 [rpm]	n_{1maxZB} [rpm]	J_1 [kgcm²]	$\Delta\varphi_2$ [arcmin]	$\Delta\varphi_{2redII}$ [arcmin]	C_2 [Nm/ arcmin]	m [kg]
F3 (n_{1N} = 4500 min^{-1}, $M_{2acc,max}$ = 450 Nm)																	
787	67	111	3.9	2.6	F302_0057 EZ703U	333	416	5.720	143/25	3000	2600	4500	27	11.0	8.0	20	40
969	43	69	3.0	3.8	F302_0046 EZ505U	270	338	4.644	4992/1075	3000	2600	4500	20	11.0	8.0	20	38
969	55	90	3.8	3.0	F302_0046 EZ703U	270	338	4.644	4992/1075	3000	2600	4500	30	11.0	8.0	20	40
969	74	135	5.1	2.2	F302_0046 EZ705U	349	650	4.644	4992/1075	3000	2600	4500	42	11.0	8.0	20	45
F3 (n_{1N} = 6000 min^{-1}, $M_{2acc,max}$ = 450 Nm)																	
22	395	443	1.4	1.0	F303_2760 EZ302U	450	800	275.6	32242/117	4000	3900	6500	0.35	11.0	7.0	22	34
27	317	355	1.3	1.3	F303_2210 EZ302U	450	800	221.2	191149/864	4000	3900	6500	0.36	11.0	7.0	22	34
32	265	297	1.2	1.5	F303_1850 EZ302U	450	800	184.8	29939/162	4000	3900	6500	0.37	11.0	7.0	22	34
32	346	398	1.5	1.2	F303_1850 EZ303U	450	800	184.8	29939/162	4000	3900	6500	0.48	11.0	7.0	22	35
43	205	229	1.0	2.0	F302_1410 EZ302U	450	603	140.6	7595/54	4000	3900	6500	0.37	11.0	6.0	22	29
43	267	307	1.4	1.5	F302_1410 EZ303U	450	603	140.6	7595/54	4000	3900	6500	0.48	11.0	6.0	22	30
43	314	382	1.6	1.3	F302_1410 EZ401U	450	603	140.6	7595/54	4000	3900	6500	1.0	11.0	6.0	22	31
53	252	306	1.4	1.6	F302_1130 EZ401U	450	800	112.8	3724/33	4000	3900	6500	1.0	11.0	6.0	22	31
53	372	482	2.1	1.1	F302_1130 EZ501U	450	800	112.8	3724/33	4000	3900	6500	3.0	11.0	6.0	22	32
53	383	536	2.2	1.0	F302_1130 EZ402U	450	800	112.8	3724/33	4000	3900	6500	1.7	11.0	6.0	22	32
64	209	254	1.3	1.9	F302_0940 EZ401U	450	800	93.64	4214/45	4000	3900	6500	1.1	11.0	6.0	22	31
64	309	400	1.9	1.3	F302_0940 EZ501U	450	800	93.64	4214/45	4000	3900	6500	3.1	11.0	6.0	22	32
64	318	445	2.0	1.3	F302_0940 EZ402U	450	800	93.64	4214/45	4000	3900	6500	1.8	11.0	6.0	22	32
85	157	191	1.2	2.3	F302_0700 EZ401U	450	800	70.36	2744/39	4000	3900	6500	1.2	11.0	6.0	22	31
85	232	300	1.8	1.6	F302_0700 EZ501U	450	800	70.36	2744/39	4000	3900	6500	3.2	11.0	6.0	22	32
85	239	334	1.9	1.5	F302_0700 EZ402U	450	800	70.36	2744/39	4000	3900	6500	1.9	11.0	6.0	22	32
85	355	532	2.8	1.0	F302_0700 EZ502U	450	800	70.36	2744/39	4000	3900	6500	5.5	11.0	6.0	22	34
85	355	539	2.8	1.0	F302_0700 EZ701U	450	800	70.36	2744/39	4000	3900	6500	8.8	11.0	6.0	22	35
106	126	153	1.2	2.7	F302_0560 EZ401U	450	800	56.49	4067/72	4000	3900	6500	1.3	11.0	6.0	22	31
106	186	241	1.8	1.8	F302_0560 EZ501U	450	800	56.49	4067/72	4000	3900	6500	3.3	11.0	6.0	22	32
106	192	268	1.8	1.8	F302_0560 EZ402U	450	800	56.49	4067/72	4000	3900	6500	2.0	11.0	6.0	22	32
106	285	427	2.7	1.2	F302_0560 EZ502U	450	800	56.49	4067/72	4000	3900	6500	5.6	11.0	6.0	22	34
106	285	433	2.7	1.2	F302_0560 EZ701U	450	800	56.49	4067/72	4000	3900	6500	8.9	11.0	6.0	22	35
106	318	460	3.0	1.1	F302_0560 EZ404U	450	800	56.49	4067/72	4000	3900	6500	3.3	11.0	6.0	22	34
127	105	128	1.2	3.0	F302_0470 EZ401U	389	800	47.19	1274/27	4000	3900	6500	1.4	11.0	6.0	22	31
127	156	201	1.7	2.0	F302_0470 EZ501U	450	800	47.19	1274/27	4000	3900	6500	3.4	11.0	6.0	22	32
127	160	224	1.8	2.0	F302_0470 EZ402U	450	800	47.19	1274/27	4000	3900	6500	2.1	11.0	6.0	22	32
127	238	357	2.6	1.3	F302_0470 EZ502U	450	800	47.19	1274/27	4000	3900	6500	5.7	11.0	6.0	22	34
127	238	362	2.6	1.3	F302_0470 EZ701U	450	800	47.19	1274/27	4000	3900	6500	9.0	11.0	6.0	22	35
127	265	384	2.9	1.2	F302_0470 EZ404U	450	800	47.19	1274/27	4000	3900	6500	3.5	11.0	6.0	22	34
127	284	485	3.1	1.1	F302_0470 EZ503U	450	800	47.19	1274/27	4000	3900	6500	8.1	11.0	6.0	22	35
F4 (n_{1N} = 2000 min^{-1}, $M_{2acc,max}$ = 550 Nm)																	
185	409	459	7.0	1.1	F402_0110 EZ813U	550	1100	10.83	682/63	3500	3100	5500	108	10.0	7.0	39	71
223	340	381	6.8	1.3	F402_0090 EZ813U	550	1100	8.980	440/49	3200	2800	4800	109	10.0	7.0	39	71
278	272	305	6.5	1.5	F402_0072 EZ813U	550	1100	7.202	605/84	3200	2800	4800	111	10.0	7.0	39	71
278	403	480	9.7	1.0	F402_0072 EZ815U	550	1100	7.202	605/84	3200	2800	4800	174	10.0	7.0	39	84
344	220	247	6.3	1.7	F402_0058 EZ813U	550	1100	5.813	3784/651	2700	2300	4000	115	10.0	7.0	39	71
344	326	388	9.3	1.2	F402_0058 EZ815U	550	1100	5.813	3784/651	2700	2300	4000	178	10.0	7.0	39	84
428	177	198	6.1	2.0	F402_0047 EZ813U	550	907	4.678	1408/301	2700	2300	4000	119	10.0	7.0	39	71
428	262	312	9.0	1.3	F402_0047 EZ815U	550	907	4.678	1408/301	2700	2300	4000	182	10.0	7.0	39	84
F4 (n_{1N} = 3000 min^{-1}, $M_{2acc,max}$ = 700 Nm)																	
6.8	668	706	1.2	1.0	F403_4400 EZ302U	700	1400	439.7	58045/132	3800	3500	6000	0.35	10.0	6.0	39	42
8.2	556	587	1.1	1.3	F403_3660 EZ302U	700	1400	365.6	3290/9	3800	3500	6000	0.35	10.0	6.0	39	42
11	417	441	0.9	1.7	F403_2740 EZ302U	700	1400	274.4	59267/216	3800	3500	6000	0.36	10.0	6.0	39	42
11	543	574	1.2	1.3	F403_2740 EZ303U	700	1400	274.4	59267/216	3800	3500	6000	0.47	10.0	6.0	39	42
14	333	352	0.8	2.1	F403_2190 EZ302U	700	1400	219.2	94705/432	3800	3500	6000	0.38	10.0	6.0	39	42
14	434	459	1.1	1.6	F403_2190 EZ303U	700	1400	219.2	94705/432	3800	3500	6000	0.49	10.0	6.0	39	42
14	587	629	1.5	1.2	F403_2190 EZ401U	700	1400	219.2	94705/432	3800	3500	6000	1.0	10.0	6.0	39	44
16	279	295	0.8	2.5	F403_1840 EZ302U	700	1179	183.9	39715/216	3800	3500	6000	0.39	10.0	6.0	39	42
16	364	385	1.0	1.9	F403_1840 EZ303U	700	1179	183.9	39715/216	3800	3500	6000	0.50	10.0	6.0	39	42
16	492	527	1.3	1.4	F403_1840 EZ401U	700	1179	183.9	39715/216	3800	3500	6000	1.0	10.0	6.0	39	44
21	583	637	1.8	1.2	F402_1400 EZ501U	700	1400	139.8	559/4	3800	3500	6000	3.0	10.0	5.0	39	40
27	468	512	1.6	1.5	F402_1120 EZ501U	700	1400	112.3	1235/11	3800	3500	6000	3.1	10.0	5.0	39	40
32	389	426	1.5	1.8	F402_0930 EZ501U	700	1400	93.33	280/3	3800	3500	6000	3.2	10.0	5.0	39	40
32	670	724	2.6	1.0	F402_0930 EZ502U	700	1400	93.33	280/3	3800	3500	6000	5.5	10.0	5.0	39	42
32	670	751	2.6	1.0	F402_0930 EZ701U	700	1400	93.33	280/3	3800	3500	6000	8.8	10.0	5.0	39	44
43	292	319	1.3	2.4	F402_0700 EZ501U	700	1400	70.06	1261/18	3800	3500	6000	3.3	10.0	5.0	39	40
43	503	544	2.2	1.4	F402_0700 EZ502U	700	1400	70.06	1261/18	3800	3500	6000	5.6	10.0	5.0	39	42

n_{2N} [rpm]	M_{2N} [Nm]	$M_{2,0}$ [Nm]	a_{th}	S	Type	M_{2acc} [Nm]	M_{2NOT} [Nm]	i	i_{exakt}	n_{1maxDB} EL1,2,3,4 [rpm]	n_{1maxDB} EL5,6 [rpm]	n_{1maxZB} [rpm]	J_1 [kgcm²]	$\Delta\varphi_2$ [arcmin]	$\Delta\varphi_{2redII}$ [arcmin]	C_2 [Nm/ arcmin]	m [kg]
F4 (n_{1N} = 3000 min^{-1}, $M_{2acc,max}$ = 700 Nm)																	
43	503	564	2.2	1.4	F402_0700 EZ701U	700	1400	70.06	1261/18	3800	3500	6000	8.9	10.0	5.0	39	44
43	659	754	2.9	1.1	F402_0700 EZ503U	700	1400	70.06	1261/18	3800	3500	6000	8.0	10.0	5.0	39	43
54	233	255	1.2	3.0	F402_0560 EZ501U	700	1400	55.97	2015/36	3800	3500	6000	3.5	10.0	5.0	39	40
54	402	434	2.0	1.7	F402_0560 EZ502U	700	1400	55.97	2015/36	3800	3500	6000	5.8	10.0	5.0	39	42
54	402	451	2.0	1.7	F402_0560 EZ701U	700	1400	55.97	2015/36	3800	3500	6000	9.1	10.0	5.0	39	44
54	527	603	2.6	1.3	F402_0560 EZ503U	700	1400	55.97	2015/36	3800	3500	6000	8.2	10.0	5.0	39	43
54	652	782	3.2	1.1	F402_0560 EZ702U	700	1400	55.97	2015/36	3800	3500	6000	14	10.0	5.0	39	46
64	196	214	1.1	3.4	F402_0470 EZ501U	700	1366	46.94	845/18	3800	3500	6000	3.7	10.0	5.0	39	40
64	337	364	1.9	2.0	F402_0470 EZ502U	700	1366	46.94	845/18	3800	3500	6000	6.0	10.0	5.0	39	42
64	337	378	1.9	2.0	F402_0470 EZ701U	700	1400	46.94	845/18	3800	3500	6000	9.3	10.0	5.0	39	44
64	442	505	2.5	1.5	F402_0470 EZ503U	700	1366	46.94	845/18	3800	3500	6000	8.4	10.0	5.0	39	43
64	546	656	3.1	1.2	F402_0470 EZ702U	700	1400	46.94	845/18	3800	3500	6000	15	10.0	5.0	39	46
64	615	729	3.5	1.1	F402_0470 EZ505U	700	1400	46.94	845/18	3800	3500	6000	13	10.0	5.0	39	46
86	252	282	1.8	2.4	F402_0350 EZ701U	681	1400	35.08	2210/63	3500	3100	5500	9.8	10.0	5.0	39	44
86	408	490	3.0	1.5	F402_0350 EZ702U	700	1400	35.08	2210/63	3500	3100	5500	15	10.0	5.0	39	46
86	459	544	3.4	1.3	F402_0350 EZ505U	700	1400	35.08	2210/63	3500	3100	5500	13	10.0	5.0	39	46
86	561	708	4.1	1.1	F402_0350 EZ703U	700	1400	35.08	2210/63	3500	3100	5500	23	10.0	5.0	39	48
107	201	225	1.8	2.8	F402_0280 EZ701U	543	1400	27.99	2015/72	3500	3100	5500	10	10.0	5.0	39	44
107	326	391	2.9	1.7	F402_0280 EZ702U	700	1400	27.99	2015/72	3500	3100	5500	16	10.0	5.0	39	46
107	366	434	3.2	1.5	F402_0280 EZ505U	700	1400	27.99	2015/72	3500	3100	5500	14	10.0	5.0	39	46
107	448	565	4.0	1.2	F402_0280 EZ703U	700	1400	27.99	2015/72	3500	3100	5500	23	10.0	5.0	39	48
129	167	187	1.7	3.1	F402_0230 EZ701U	450	1400	23.21	325/14	3200	2800	4800	11	10.0	5.0	39	44
129	270	324	2.8	1.9	F402_0230 EZ702U	700	1400	23.21	325/14	3200	2800	4800	16	10.0	5.0	39	46
129	304	360	3.1	1.7	F402_0230 EZ505U	700	1400	23.21	325/14	3200	2800	4800	15	10.0	5.0	39	46
129	372	468	3.8	1.4	F402_0230 EZ703U	700	1400	23.21	325/14	3200	2800	4800	24	10.0	5.0	39	48
129	480	680	5.0	1.1	F402_0230 EZ705U	700	1400	23.21	325/14	3200	2800	4800	36	10.0	5.0	39	54
161	134	150	1.7	3.6	F402_0185 EZ701U	361	1355	18.62	3575/192	3200	2800	4800	12	10.0	5.0	39	44
161	217	260	2.7	2.2	F402_0185 EZ702U	700	1355	18.62	3575/192	3200	2800	4800	17	10.0	5.0	39	46
161	244	289	3.0	2.0	F402_0185 EZ505U	700	1355	18.62	3575/192	3200	2800	4800	15	10.0	5.0	39	46
161	298	376	3.7	1.6	F402_0185 EZ703U	700	1355	18.62	3575/192	3200	2800	4800	25	10.0	5.0	39	48
161	385	545	4.8	1.3	F402_0185 EZ705U	700	1400	18.62	3575/192	3200	2800	4800	37	10.0	5.0	39	54
221	97	109	1.6	4.5	F402_0135 EZ701U	263	932	13.57	5984/441	3500	3100	5500	11	10.0	7.0	39	44
221	158	190	2.6	2.8	F402_0135 EZ702U	540	932	13.57	5984/441	3500	3100	5500	16	10.0	7.0	39	46
221	178	211	2.9	2.5	F402_0135 EZ505U	550	932	13.57	5984/441	3500	3100	5500	14	10.0	7.0	39	46
221	217	274	3.5	2.0	F402_0135 EZ703U	550	932	13.57	5984/441	3500	3100	5500	24	10.0	7.0	39	48
221	280	397	4.5	1.6	F402_0135 EZ705U	550	1100	13.57	5984/441	3500	3100	5500	36	10.0	7.0	39	54
277	126	151	2.5	3.2	F402_0110 EZ702U	431	788	10.83	682/63	3500	3100	5500	17	10.0	7.0	39	46
277	142	168	2.8	2.9	F402_0110 EZ505U	550	788	10.83	682/63	3500	3100	5500	16	10.0	7.0	39	46
277	173	218	3.4	2.3	F402_0110 EZ703U	550	788	10.83	682/63	3500	3100	5500	25	10.0	7.0	39	48
277	224	317	4.4	1.8	F402_0110 EZ705U	550	1100	10.83	682/63	3500	3100	5500	37	10.0	7.0	39	54
334	105	125	2.4	3.6	F402_0090 EZ702U	357	653	8.980	440/49	3200	2800	4800	18	10.0	7.0	39	46
334	118	139	2.7	3.2	F402_0090 EZ505U	523	653	8.980	440/49	3200	2800	4800	17	10.0	7.0	39	46
334	144	181	3.3	2.6	F402_0090 EZ703U	523	653	8.980	440/49	3200	2800	4800	26	10.0	7.0	39	48
334	186	263	4.2	2.1	F402_0090 EZ705U	550	1100	8.980	440/49	3200	2800	4800	39	10.0	7.0	39	54
417	84	101	2.3	4.2	F402_0072 EZ702U	286	524	7.202	605/84	3200	2800	4800	21	10.0	7.0	39	46
417	94	112	2.6	3.7	F402_0072 EZ505U	419	524	7.202	605/84	3200	2800	4800	19	10.0	7.0	39	46
417	115	145	3.2	3.1	F402_0072 EZ703U	419	524	7.202	605/84	3200	2800	4800	29	10.0	7.0	39	48
417	149	211	4.1	2.4	F402_0072 EZ705U	550	1100	7.202	605/84	3200	2800	4800	41	10.0	7.0	39	54
516	120	170	3.9	2.7	F402_0058 EZ705U	550	1100	5.813	3784/651	2700	2300	4000	44	10.0	7.0	39	54
641	97	137	3.8	3.2	F402_0047 EZ705U	472	907	4.678	1408/301	2700	2300	4000	49	10.0	7.0	39	54
F4 (n_{1N} = 4000 min^{-1}, $M_{2acc,max}$ = 550 Nm)																	
295	332	575	5.9	1.2	F402_0135 EZ813U	550	1100	13.57	5984/441	3500	3100	5500	107	10.0	7.0	39	71
295	344	884	6.1	1.2	F402_0135 EZ815U	550	1100	13.57	5984/441	3500	3100	5500	170	10.0	7.0	39	84
370	265	459	5.7	1.4	F402_0110 EZ813U	550	1100	10.83	682/63	3500	3100	5500	108	10.0	7.0	39	71
370	274	705	5.9	1.3	F402_0110 EZ815U	550	1100	10.83	682/63	3500	3100	5500	171	10.0	7.0	39	84
445	220	381	5.5	1.6	F402_0090 EZ813U	550	1100	8.980	440/49	3200	2800	4800	109	10.0	7.0	39	71
445	227	585	5.7	1.5	F402_0090 EZ815U	550	1100	8.980	440/49	3200	2800	4800	172	10.0	7.0	39	84
555	176	305	5.3	1.8	F402_0072 EZ813U	550	1100	7.202	605/84	3200	2800	4800	111	10.0	7.0	39	71
555	182	469	5.5	1.8	F402_0072 EZ815U	550	1100	7.202	605/84	3200	2800	4800	174	10.0	7.0	39	84
688	142	246	5.1	2.1	F402_0058 EZ813U	550	1100	5.813	3784/651	2700	2300	4000	115	10.0	7.0	39	71
688	147	379	5.3	2.0	F402_0058 EZ815U	550	1100	5.813	3784/651	2700	2300	4000	178	10.0	7.0	39	84
855	114	198	4.9	2.4	F402_0047 EZ813U	550	907	4.678	1408/301	2700	2300	4000	119	10.0	7.0	39	71
855	118	305	5.1	2.3	F402_0047 EZ815U	550	907	4.678	1408/301	2700	2300	4000	182	10.0	7.0	39	84

n_{2N} [rpm]	M_{2N} [Nm]	$M_{2,0}$ [Nm]	a_{th}	S	Type	M_{2acc} [Nm]	M_{2NOT} [Nm]	i	i_{exakt}	n_{1maxDB} EL1,2,3,4 [rpm]	n_{1maxDB} EL5,6 [rpm]	n_{1maxZB} [rpm]	J_1 [kgcm²]	$\Delta\varphi_2$ [arcmin]	$\Delta\varphi_{2redII}$ [arcmin]	C_2 [Nm/ arcmin]	m [kg]
F4 (n_{1N} = 4500 min^{-1}, $M_{2acc,max}$ = 700 Nm)																	
64	646	1040	3.0	1.0	F402_0700 EZ505U	700	1400	70.06	1261/18	3800	3500	6000	13	10.0	5.0	39	46
80	516	831	2.9	1.2	F402_0560 EZ505U	700	1400	55.97	2015/36	3800	3500	6000	13	10.0	5.0	39	46
96	433	697	2.8	1.3	F402_0470 EZ505U	700	1400	46.94	845/18	3800	3500	6000	13	10.0	5.0	39	46
96	551	911	3.6	1.0	F402_0470 EZ703U	700	1400	46.94	845/18	3800	3500	6000	22	10.0	5.0	39	48
128	323	521	2.7	1.6	F402_0350 EZ505U	700	1400	35.08	2210/63	3500	3100	5500	13	10.0	5.0	39	46
128	412	681	3.5	1.3	F402_0350 EZ703U	700	1400	35.08	2210/63	3500	3100	5500	23	10.0	5.0	39	48
161	258	415	2.6	1.9	F402_0280 EZ505U	700	1400	27.99	2015/72	3500	3100	5500	14	10.0	5.0	39	46
161	328	543	3.3	1.5	F402_0280 EZ703U	700	1400	27.99	2015/72	3500	3100	5500	23	10.0	5.0	39	48
161	445	814	4.5	1.1	F402_0280 EZ705U	700	1400	27.99	2015/72	3500	3100	5500	36	10.0	5.0	39	54
194	214	345	2.5	2.1	F402_0230 EZ505U	700	1400	23.21	325/14	3200	2800	4800	15	10.0	5.0	39	46
194	272	450	3.2	1.7	F402_0230 EZ703U	700	1400	23.21	325/14	3200	2800	4800	24	10.0	5.0	39	48
194	369	676	4.4	1.2	F402_0230 EZ705U	700	1400	23.21	325/14	3200	2800	4800	36	10.0	5.0	39	54
242	172	276	2.4	2.5	F402_0185 EZ505U	700	1355	18.62	3575/192	3200	2800	4800	15	10.0	5.0	39	46
242	219	361	3.1	1.9	F402_0185 EZ703U	700	1355	18.62	3575/192	3200	2800	4800	25	10.0	5.0	39	48
242	296	542	4.2	1.4	F402_0185 EZ705U	700	1400	18.62	3575/192	3200	2800	4800	37	10.0	5.0	39	54
332	125	201	2.3	3.0	F402_0135 EZ505U	550	932	13.57	5984/441	3500	3100	5500	14	10.0	7.0	39	46
332	159	263	2.9	2.4	F402_0135 EZ703U	550	932	13.57	5984/441	3500	3100	5500	24	10.0	7.0	39	48
332	216	395	4.0	1.8	F402_0135 EZ705U	550	1100	13.57	5984/441	3500	3100	5500	36	10.0	7.0	39	54
416	100	161	2.2	3.5	F402_0110 EZ505U	550	788	10.83	682/63	3500	3100	5500	16	10.0	7.0	39	46
416	127	210	2.8	2.8	F402_0110 EZ703U	550	788	10.83	682/63	3500	3100	5500	25	10.0	7.0	39	48
416	172	315	3.8	2.1	F402_0110 EZ705U	550	1100	10.83	682/63	3500	3100	5500	37	10.0	7.0	39	54
501	83	133	2.2	4.0	F402_0090 EZ505U	523	653	8.980	440/49	3200	2800	4800	17	10.0	7.0	39	46
501	105	174	2.8	3.2	F402_0090 EZ703U	523	653	8.980	440/49	3200	2800	4800	26	10.0	7.0	39	48
501	143	261	3.7	2.3	F402_0090 EZ705U	550	1100	8.980	440/49	3200	2800	4800	39	10.0	7.0	39	54
625	66	107	2.1	4.7	F402_0072 EZ505U	419	524	7.202	605/84	3200	2800	4800	19	10.0	7.0	39	46
625	85	140	2.7	3.7	F402_0072 EZ703U	419	524	7.202	605/84	3200	2800	4800	29	10.0	7.0	39	48
625	115	210	3.6	2.7	F402_0072 EZ705U	550	1100	7.202	605/84	3200	2800	4800	41	10.0	7.0	39	54
F4 (n_{1N} = 6000 min^{-1}, $M_{2acc,max}$ = 700 Nm)																	
14	631	706	1.1	1.1	F403_4400 EZ302U	700	1400	439.7	58045/132	3800	3500	6000	0.35	10.0	6.0	39	42
16	524	587	1.0	1.3	F403_3660 EZ302U	700	1400	365.6	3290/9	3800	3500	6000	0.35	10.0	6.0	39	42
16	685	786	1.3	1.0	F403_3660 EZ303U	700	1400	365.6	3290/9	3800	3500	6000	0.46	10.0	6.0	39	42
22	393	441	0.9	1.8	F403_2740 EZ302U	700	1400	274.4	59267/216	3800	3500	6000	0.36	10.0	6.0	39	42
22	514	590	1.2	1.4	F403_2740 EZ303U	700	1400	274.4	59267/216	3800	3500	6000	0.47	10.0	6.0	39	42
22	603	734	1.4	1.2	F403_2740 EZ401U	700	1400	274.4	59267/216	3800	3500	6000	1.0	10.0	6.0	39	44
27	314	352	0.8	2.2	F403_2190 EZ302U	700	1400	219.2	94705/432	3800	3500	6000	0.38	10.0	6.0	39	42
27	411	472	1.0	1.7	F403_2190 EZ303U	700	1400	219.2	94705/432	3800	3500	6000	0.49	10.0	6.0	39	42
27	482	587	1.2	1.5	F403_2190 EZ401U	700	1400	219.2	94705/432	3800	3500	6000	1.0	10.0	6.0	39	44
33	264	295	0.8	2.5	F403_1840 EZ302U	700	1179	183.9	39715/216	3800	3500	6000	0.39	10.0	6.0	39	42
33	345	395	1.0	1.9	F403_1840 EZ303U	700	1179	183.9	39715/216	3800	3500	6000	0.50	10.0	6.0	39	42
33	404	492	1.2	1.7	F403_1840 EZ401U	700	1179	183.9	39715/216	3800	3500	6000	1.0	10.0	6.0	39	44
33	590	764	1.6	1.2	F403_1820 EZ501U	700	1400	181.5	4901/27	3800	3500	6000	3.1	10.0	6.0	39	45
43	461	596	1.4	1.5	F402_1400 EZ501U	700	1400	139.8	559/4	3800	3500	6000	3.0	10.0	5.0	39	40
53	370	479	1.3	1.9	F402_1120 EZ501U	700	1400	112.3	1235/11	3800	3500	6000	3.1	10.0	5.0	39	40
53	566	849	2.0	1.2	F402_1120 EZ502U	700	1400	112.3	1235/11	3800	3500	6000	5.4	10.0	5.0	39	42
53	566	860	2.0	1.2	F402_1120 EZ701U	700	1400	112.3	1235/11	3800	3500	6000	8.7	10.0	5.0	39	44
53	675	1154	2.4	1.0	F402_1120 EZ503U	700	1400	112.3	1235/11	3800	3500	6000	7.8	10.0	5.0	39	43
64	308	398	1.3	2.1	F402_0930 EZ501U	700	1400	93.33	280/3	3800	3500	6000	3.2	10.0	5.0	39	40
64	471	706	1.9	1.4	F402_0930 EZ502U	700	1400	93.33	280/3	3800	3500	6000	5.5	10.0	5.0	39	42
64	471	715	1.9	1.4	F402_0930 EZ701U	700	1400	93.33	280/3	3800	3500	6000	8.8	10.0	5.0	39	44
64	561	960	2.3	1.2	F402_0930 EZ503U	700	1400	93.33	280/3	3800	3500	6000	7.8	10.0	5.0	39	43
86	231	299	1.2	2.6	F402_0700 EZ501U	700	1400	70.06	1261/18	3800	3500	6000	3.3	10.0	5.0	39	40
86	353	530	1.8	1.7	F402_0700 EZ502U	700	1400	70.06	1261/18	3800	3500	6000	5.6	10.0	5.0	39	42
86	353	537	1.8	1.7	F402_0700 EZ701U	700	1400	70.06	1261/18	3800	3500	6000	8.9	10.0	5.0	39	44
86	421	720	2.2	1.4	F402_0700 EZ503U	700	1400	70.06	1261/18	3800	3500	6000	8.0	10.0	5.0	39	43
86	489	972	2.5	1.2	F402_0700 EZ702U	700	1400	70.06	1261/18	3800	3500	6000	14	10.0	5.0	39	46
107	185	239	1.2	3.0	F402_0560 EZ501U	700	1400	55.97	2015/36	3800	3500	6000	3.5	10.0	5.0	39	40
107	282	423	1.8	2.0	F402_0560 EZ502U	700	1400	55.97	2015/36	3800	3500	6000	5.8	10.0	5.0	39	42
107	282	429	1.8	2.0	F402_0560 EZ701U	700	1400	55.97	2015/36	3800	3500	6000	9.1	10.0	5.0	39	44
107	337	576	2.1	1.7	F402_0560 EZ503U	700	1400	55.97	2015/36	3800	3500	6000	8.2	10.0	5.0	39	43
107	391	776	2.4	1.4	F402_0560 EZ702U	700	1400	55.97	2015/36	3800	3500	6000	14	10.0	5.0	39	46
128	155	200	1.1	3.4	F402_0470 EZ501U	700	1366	46.94	845/18	3800	3500	6000	3.7	10.0	5.0	39	40
128	237	355	1.7	2.2	F402_0470 EZ502U	700	1366	46.94	845/18	3800	3500	6000	6.0	10.0	5.0	39	42
128	237	360	1.7	2.2	F402_0470 EZ701U	700	1400	46.94	845/18	3800	3500	6000	9.3	10.0	5.0	39	44

n_{2N} [rpm]	M_{2N} [Nm]	$M_{2,0}$ [Nm]	a_{th}	S	Type	M_{2acc} [Nm]	M_{2NOT} [Nm]	i	i_{exakt}	n_{1maxDB} EL1,2,3,4 [rpm]	n_{1maxDB} EL5,6 [rpm]	n_{1maxZB} [rpm]	J_1 [kgcm²]	$\Delta\varphi_2$ [arcmin]	$\Delta\varphi_{2redII}$ [arcmin]	C_2 [Nm/ arcmin]	m [kg]
F4 (n_{1N} = 6000 min^{-1}, $M_{2acc,max}$ = 700 Nm)																	
128	282	483	2.0	1.9	F402_0470 EZ503U	700	1366	46.94	845/18	3800	3500	6000	8.4	10.0	5.0	39	43
128	328	651	2.4	1.6	F402_0470 EZ702U	700	1400	46.94	845/18	3800	3500	6000	15	10.0	5.0	39	46
F6 (n_{1N} = 2000 min^{-1}, $M_{2acc,max}$ = 1100 Nm)																	
71	1058	1187	5.6	1.0	F602_0280 EZ813U	1100	2000	27.99	2015/72	3300	2800	5000	109	10.0	5.0	77	98
86	880	987	5.5	1.1	F602_0230 EZ813U	1100	2000	23.27	1885/81	2900	2500	4500	110	10.0	5.0	77	98
108	701	786	5.3	1.3	F602_0185 EZ813U	1100	2000	18.52	3445/186	2900	2500	4500	112	10.0	5.0	77	98
147	515	577	5.0	1.6	F602_0135 EZ813U	1000	1600	13.61	871/64	3300	2800	5000	110	10.0	7.0	73	98
147	762	908	7.4	1.1	F602_0135 EZ815U	1000	1600	13.61	871/64	3300	2800	5000	173	10.0	7.0	73	111
185	409	459	4.8	1.9	F602_0110 EZ813U	1000	1600	10.82	2077/192	3300	2800	5000	112	10.0	7.0	73	98
185	606	722	7.1	1.3	F602_0110 EZ815U	1000	1600	10.82	2077/192	3300	2800	5000	175	10.0	7.0	73	111
222	340	382	4.7	2.1	F602_0090 EZ813U	1000	1600	8.995	1943/216	2900	2500	4500	115	10.0	7.0	73	98
222	504	600	6.9	1.4	F602_0090 EZ815U	1000	1600	8.995	1943/216	2900	2500	4500	178	10.0	7.0	73	111
279	271	304	4.5	2.5	F602_0072 EZ813U	972	1385	7.159	3551/496	2900	2500	4500	121	10.0	7.0	73	98
279	401	477	6.7	1.7	F602_0072 EZ815U	1000	1385	7.159	3551/496	2900	2500	4500	184	10.0	7.0	73	111
353	215	241	4.3	2.9	F602_0057 EZ813U	770	1101	5.673	1407/248	2500	2100	3500	129	10.0	7.0	73	98
353	318	378	6.4	2.0	F602_0057 EZ815U	881	1101	5.673	1407/248	2500	2100	3500	192	10.0	7.0	73	111
440	172	193	4.2	3.4	F602_0045 EZ813U	617	883	4.546	1273/280	2500	2100	3500	141	10.0	7.0	73	98
440	255	303	6.2	2.3	F602_0045 EZ815U	706	883	4.546	1273/280	2500	2100	3500	204	10.0	7.0	73	111
F6 (n_{1N} = 3000 min^{-1}, $M_{2acc,max}$ = 1100 Nm)																	
14	886	968	1.6	1.2	F603_2150 EZ501U	1100	2000	215.4	1508/7	3500	3200	5500	3.2	10.0	6.0	77	72
17	743	812	1.5	1.5	F603_1810 EZ501U	1100	2000	180.6	8671/48	3500	3200	5500	3.2	10.0	6.0	77	72
21	583	637	1.3	1.9	F602_1400 EZ501U	1100	2000	139.8	559/4	3500	3200	5500	3.2	10.0	5.0	77	67
21	1003	1084	2.3	1.1	F602_1400 EZ502U	1100	2000	139.8	559/4	3500	3200	5500	5.5	10.0	5.0	77	69
21	1003	1125	2.3	1.1	F602_1400 EZ701U	1100	2000	139.8	559/4	3500	3200	5500	8.8	10.0	5.0	77	71
27	468	512	1.2	2.4	F602_1120 EZ501U	1100	2000	112.2	9425/84	3500	3200	5500	3.3	10.0	5.0	77	67
27	805	871	2.1	1.4	F602_1120 EZ502U	1100	2000	112.2	9425/84	3500	3200	5500	5.6	10.0	5.0	77	69
27	805	903	2.1	1.4	F602_1120 EZ701U	1100	2000	112.2	9425/84	3500	3200	5500	8.9	10.0	5.0	77	71
27	1056	1208	2.7	1.0	F602_1120 EZ503U	1100	2000	112.2	9425/84	3500	3200	5500	8.0	10.0	5.0	77	70
32	389	426	1.1	2.8	F602_0930 EZ501U	1100	1867	93.33	280/3	3500	3200	5500	3.5	10.0	5.0	77	67
32	670	724	1.9	1.6	F602_0930 EZ502U	1100	1867	93.33	280/3	3500	3200	5500	5.8	10.0	5.0	77	69
32	670	751	1.9	1.6	F602_0930 EZ701U	1100	2000	93.33	280/3	3500	3200	5500	9.1	10.0	5.0	77	71
32	878	1005	2.5	1.3	F602_0930 EZ503U	1100	1867	93.33	280/3	3500	3200	5500	8.2	10.0	5.0	77	70
32	1086	1304	3.1	1.0	F602_0930 EZ702U	1100	2000	93.33	280/3	3500	3200	5500	14	10.0	5.0	77	73
43	290	318	0.9	3.8	F602_0700 EZ501U	1081	1588	69.64	975/14	3500	3200	5500	3.9	10.0	5.0	77	67
43	500	540	1.6	2.2	F602_0700 EZ502U	1100	1588	69.64	975/14	3500	3200	5500	6.2	10.0	5.0	77	69
43	500	561	1.6	2.2	F602_0700 EZ701U	1100	2000	69.64	975/14	3500	3200	5500	9.5	10.0	5.0	77	71
43	655	750	2.1	1.7	F602_0700 EZ503U	1100	1588	69.64	975/14	3500	3200	5500	8.6	10.0	5.0	77	70
43	811	973	2.6	1.4	F602_0700 EZ702U	1100	2000	69.64	975/14	3500	3200	5500	15	10.0	5.0	77	73
43	912	1081	3.0	1.2	F602_0700 EZ505U	1100	2000	69.64	975/14	3500	3200	5500	13	10.0	5.0	77	73
54	400	449	1.5	2.8	F602_0560 EZ701U	1081	2000	55.71	390/7	3500	3200	5500	10	10.0	5.0	77	71
54	649	778	2.4	1.7	F602_0560 EZ702U	1100	2000	55.71	390/7	3500	3200	5500	15	10.0	5.0	77	73
54	730	865	2.7	1.5	F602_0560 EZ505U	1100	2000	55.71	390/7	3500	3200	5500	14	10.0	5.0	77	73
54	892	1124	3.3	1.2	F602_0560 EZ703U	1100	2000	55.71	390/7	3500	3200	5500	23	10.0	5.0	77	75
64	335	376	1.3	3.3	F602_0470 EZ701U	906	2000	46.72	1495/32	3500	3200	5500	10	10.0	5.0	77	71
64	544	653	2.2	2.0	F602_0470 EZ702U	1100	2000	46.72	1495/32	3500	3200	5500	16	10.0	5.0	77	73
64	612	725	2.4	1.8	F602_0470 EZ505U	1100	2000	46.72	1495/32	3500	3200	5500	14	10.0	5.0	77	73
64	748	943	3.0	1.5	F602_0470 EZ703U	1100	2000	46.72	1495/32	3500	3200	5500	24	10.0	5.0	77	75
64	965	1369	3.9	1.1	F602_0470 EZ705U	1100	2000	46.72	1495/32	3500	3200	5500	36	10.0	5.0	77	81
85	253	283	1.3	4.0	F602_0350 EZ701U	683	2000	35.21	845/24	3300	2800	5000	11	10.0	5.0	77	71
85	410	492	2.1	2.4	F602_0350 EZ702U	1100	2000	35.21	845/24	3300	2800	5000	17	10.0	5.0	77	73
85	461	546	2.3	2.2	F602_0350 EZ505U	1100	2000	35.21	845/24	3300	2800	5000	15	10.0	5.0	77	73
85	564	710	2.8	1.8	F602_0350 EZ703U	1100	2000	35.21	845/24	3300	2800	5000	25	10.0	5.0	77	75
85	727	1031	3.7	1.4	F602_0350 EZ705U	1100	2000	35.21	845/24	3300	2800	5000	37	10.0	5.0	77	81
107	201	225	1.2	4.6	F602_0280 EZ701U	543	2000	27.99	2015/72	3300	2800	5000	13	10.0	5.0	77	71
107	326	391	2.0	2.9	F602_0280 EZ702U	1100	2000	27.99	2015/72	3300	2800	5000	18	10.0	5.0	77	73
107	366	434	2.2	2.5	F602_0280 EZ505U	1100	2000	27.99	2015/72	3300	2800	5000	16	10.0	5.0	77	73
107	448	565	2.7	2.1	F602_0280 EZ703U	1100	2000	27.99	2015/72	3300	2800	5000	26	10.0	5.0	77	75
107	578	820	3.5	1.6	F602_0280 EZ705U	1100	2000	27.99	2015/72	3300	2800	5000	38	10.0	5.0	77	81
129	271	325	1.9	3.2	F602_0230 EZ702U	926	1693	23.27	1885/81	2900	2500	4500	19	10.0	5.0	77	73
129	305	361	2.2	2.9	F602_0230 EZ505U	1100	1693	23.27	1885/81	2900	2500	4500	18	10.0	5.0	77	73
129	372	470	2.7	2.3	F602_0230 EZ703U	1100	1693	23.27	1885/81	2900	2500	4500	27	10.0	5.0	77	75
129	481	682	3.4	1.8	F602_0230 EZ705U	1100	2000	23.27	1885/81	2900	2500	4500	39	10.0	5.0	77	81
162	383	543	3.3	2.1	F602_0185 EZ705U	1100	2000	18.52	3445/186	2900	2500	4500	42	10.0	5.0	77	81
220	158	190	1.8	4.6	F602_0135 EZ702U	541	921	13.61	871/64	3300	2800	5000	19	10.0	7.0	73	73

n_{2N} [rpm]	M_{2N} [Nm]	$M_{2,0}$ [Nm]	a_{th}	S	Type	M_{2acc} [Nm]	M_{2NOT} [Nm]	i	i_{exakt}	n_{1maxDB} EL1,2,3,4 [rpm]	n_{1maxDB} EL5,6 [rpm]	n_{1maxZB} [rpm]	J_1 [kgcm²]	$\Delta\varphi_2$ [arcmin]	$\Delta\varphi_{2redII}$ [arcmin]	C_2 [Nm/ arcmin]	m [kg]
F6 (n_{1N} = 3000 min^{-1}, $M_{2acc,max}$ = 1100 Nm)																	
220	178	211	2.0	4.1	F602_0135 EZ505U	736	921	13.61	871/64	3300	2800	5000	18	10.0	7.0	73	73
220	218	275	2.4	3.4	F602_0135 EZ703U	736	921	13.61	871/64	3300	2800	5000	27	10.0	7.0	73	75
220	281	399	3.1	2.6	F602_0135 EZ705U	1000	1600	13.61	871/64	3300	2800	5000	39	10.0	7.0	73	81
277	142	168	2.1	4.4	F602_0110 EZ505U	630	787	10.82	2077/192	3300	2800	5000	20	10.0	7.0	73	73
277	173	218	2.5	3.6	F602_0110 EZ703U	630	787	10.82	2077/192	3300	2800	5000	30	10.0	7.0	73	75
277	224	317	3.0	3.0	F602_0110 EZ705U	1000	1600	10.82	2077/192	3300	2800	5000	42	10.0	7.0	73	81
334	118	140	2.3	4.4	F602_0090 EZ505U	524	655	8.995	1943/216	2900	2500	4500	23	10.0	7.0	73	73
334	144	181	2.8	3.6	F602_0090 EZ703U	524	655	8.995	1943/216	2900	2500	4500	33	10.0	7.0	73	75
334	186	264	2.9	3.4	F602_0090 EZ705U	907	1600	8.995	1943/216	2900	2500	4500	45	10.0	7.0	73	81
419	148	210	2.8	4.0	F602_0072 EZ705U	722	1385	7.159	3551/496	2900	2500	4500	50	10.0	7.0	73	81
529	117	166	2.7	4.7	F602_0057 EZ705U	572	1101	5.673	1407/248	2500	2100	3500	58	10.0	7.0	73	81
F6 (n_{1N} = 4000 min^{-1}, $M_{2acc,max}$ = 1100 Nm)																	
114	861	1492	4.8	1.1	F602_0350 EZ813U	1100	2000	35.21	845/24	3300	2800	5000	107	10.0	5.0	77	98
114	892	2293	5.0	1.0	F602_0350 EZ815U	1100	2000	35.21	845/24	3300	2800	5000	170	10.0	5.0	77	111
143	684	1186	4.6	1.2	F602_0280 EZ813U	1100	2000	27.99	2015/72	3300	2800	5000	109	10.0	5.0	77	98
143	709	1823	4.8	1.2	F602_0280 EZ815U	1100	2000	27.99	2015/72	3300	2800	5000	172	10.0	5.0	77	111
172	569	986	4.5	1.4	F602_0230 EZ813U	1100	2000	23.27	1885/81	2900	2500	4500	110	10.0	5.0	77	98
172	589	1516	4.6	1.3	F602_0230 EZ815U	1100	2000	23.27	1885/81	2900	2500	4500	173	10.0	5.0	77	111
216	453	785	4.3	1.6	F602_0185 EZ813U	1100	2000	18.52	3445/186	2900	2500	4500	112	10.0	5.0	77	98
216	469	1206	4.4	1.6	F602_0185 EZ815U	1100	2000	18.52	3445/186	2900	2500	4500	175	10.0	5.0	77	111
294	333	577	4.1	2.0	F602_0135 EZ813U	1000	1600	13.61	871/64	3300	2800	5000	110	10.0	7.0	73	98
294	345	886	4.2	1.9	F602_0135 EZ815U	1000	1600	13.61	871/64	3300	2800	5000	173	10.0	7.0	73	111
370	264	459	3.9	2.3	F602_0110 EZ813U	1000	1600	10.82	2077/192	3300	2800	5000	112	10.0	7.0	73	98
370	274	705	4.1	2.2	F602_0110 EZ815U	1000	1600	10.82	2077/192	3300	2800	5000	175	10.0	7.0	73	111
445	220	381	3.8	2.6	F602_0090 EZ813U	1000	1600	8.995	1943/216	2900	2500	4500	115	10.0	7.0	73	98
445	228	586	3.9	2.5	F602_0090 EZ815U	1000	1600	8.995	1943/216	2900	2500	4500	178	10.0	7.0	73	111
559	175	303	3.7	3.1	F602_0072 EZ813U	972	1385	7.159	3551/496	2900	2500	4500	121	10.0	7.0	73	98
559	181	466	3.8	3.0	F602_0072 EZ815U	1000	1385	7.159	3551/496	2900	2500	4500	184	10.0	7.0	73	111
F6 (n_{1N} = 4500 min^{-1}, $M_{2acc,max}$ = 1100 Nm)																	
48	860	1385	2.4	1.3	F602_0930 EZ505U	1100	2000	93.33	280/3	3500	3200	5500	13	10.0	5.0	77	73
48	1095	1811	3.1	1.0	F602_0930 EZ703U	1100	2000	93.33	280/3	3500	3200	5500	22	10.0	5.0	77	75
65	642	1034	2.1	1.7	F602_0700 EZ505U	1100	2000	69.64	975/14	3500	3200	5500	13	10.0	5.0	77	73
65	817	1351	2.7	1.3	F602_0700 EZ703U	1100	2000	69.64	975/14	3500	3200	5500	23	10.0	5.0	77	75
81	513	827	2.0	2.0	F602_0560 EZ505U	1100	2000	55.71	390/7	3500	3200	5500	14	10.0	5.0	77	73
81	654	1081	2.6	1.6	F602_0560 EZ703U	1100	2000	55.71	390/7	3500	3200	5500	23	10.0	5.0	77	75
96	431	693	2.0	2.2	F602_0470 EZ505U	1100	2000	46.72	1495/32	3500	3200	5500	14	10.0	5.0	77	73
96	548	906	2.5	1.8	F602_0470 EZ703U	1100	2000	46.72	1495/32	3500	3200	5500	24	10.0	5.0	77	75
96	743	1360	3.4	1.3	F602_0470 EZ705U	1100	2000	46.72	1495/32	3500	3200	5500	36	10.0	5.0	77	81
128	324	523	1.9	2.7	F602_0350 EZ505U	1100	2000	35.21	845/24	3300	2800	5000	15	10.0	5.0	77	73
128	413	683	2.4	2.1	F602_0350 EZ703U	1100	2000	35.21	845/24	3300	2800	5000	25	10.0	5.0	77	75
128	560	1025	3.2	1.6	F602_0350 EZ705U	1100	2000	35.21	845/24	3300	2800	5000	37	10.0	5.0	77	81
161	258	415	1.8	3.1	F602_0280 EZ505U	1100	2000	27.99	2015/72	3300	2800	5000	16	10.0	5.0	77	73
161	328	543	2.3	2.5	F602_0280 EZ703U	1100	2000	27.99	2015/72	3300	2800	5000	26	10.0	5.0	77	75
161	445	814	3.1	1.8	F602_0280 EZ705U	1100	2000	27.99	2015/72	3300	2800	5000	38	10.0	5.0	77	81
193	214	345	1.7	3.6	F602_0230 EZ505U	1100	1693	23.27	1885/81	2900	2500	4500	18	10.0	5.0	77	73
193	273	451	2.2	2.8	F602_0230 EZ703U	1100	1693	23.27	1885/81	2900	2500	4500	27	10.0	5.0	77	75
193	370	677	3.0	2.1	F602_0230 EZ705U	1100	2000	23.27	1885/81	2900	2500	4500	39	10.0	5.0	77	81
243	295	539	2.9	2.4	F602_0185 EZ705U	1100	2000	18.52	3445/186	2900	2500	4500	42	10.0	5.0	77	81
331	160	264	2.0	4.0	F602_0135 EZ703U	736	921	13.61	871/64	3300	2800	5000	27	10.0	7.0	73	75
331	216	396	2.8	2.9	F602_0135 EZ705U	1000	1600	13.61	871/64	3300	2800	5000	39	10.0	7.0	73	81
416	127	210	2.0	4.7	F602_0110 EZ703U	630	787	10.82	2077/192	3300	2800	5000	30	10.0	7.0	73	75
416	172	315	2.7	3.4	F602_0110 EZ705U	1000	1600	10.82	2077/192	3300	2800	5000	42	10.0	7.0	73	81
500	106	175	2.0	5.0	F602_0090 EZ703U	524	655	8.995	1943/216	2900	2500	4500	33	10.0	7.0	73	75
500	143	262	2.6	3.9	F602_0090 EZ705U	907	1600	8.995	1943/216	2900	2500	4500	45	10.0	7.0	73	81
629	114	208	2.5	4.5	F602_0072 EZ705U	722	1385	7.159	3551/496	2900	2500	4500	50	10.0	7.0	73	81

8.3 Dimensional drawings

In this chapter you can find the dimensions of the geared motors.

There is a dimensional drawing for every possible shaft/housing design, each with the tables for gearbox dimensions, motor dimensions and geared motor dimensions.

Dimensions can exceed the specifications of ISO 2768-mK due to casting tolerances or accumulation of individual tolerances.

We reserve the right to make dimensional changes due to ongoing technical development.

You can download 3D models of our standard drives at https://configurator.stoeber.de/en-US/.

Combination options and the dimensions of forced ventilated geared motors can also be found at https://configurator.stoeber.de/en-US/.

Tolerances

Axis height in accordance with DIN 747	Tolerance
Up to 50 mm	-0.4 mm
Up to 250 mm	-0.5 mm
Up to 630 mm	-0.6 mm

Solid shaft	Tolerance
Shaft ∅ fit ≤ 50 mm	DIN 748-1, ISO k6
Shaft ∅ fit > 50 mm	DIN 748-1, ISO m6
Feather keys	DIN 6885-1, high form A

Hollow shaft	Tolerance
Hollow shaft hole fit	ISO H7
Feather keys	DIN 6885-1, high form

Flange	Pilot tolerance
Up to 300 mm	ISO j6
Starting at 350 mm	ISO h6

Centering holes in solid shafts in accordance with DIN 332-2, DR shape

Thread size	M4	M5	M6	M8	M10	M12	M16	M20	M24
Thread depth [mm]	10	12.5	16	19	22	28	36	42	50

8.3.1 A shaft design (hollow shaft), G housing design (pitch circle diameter)

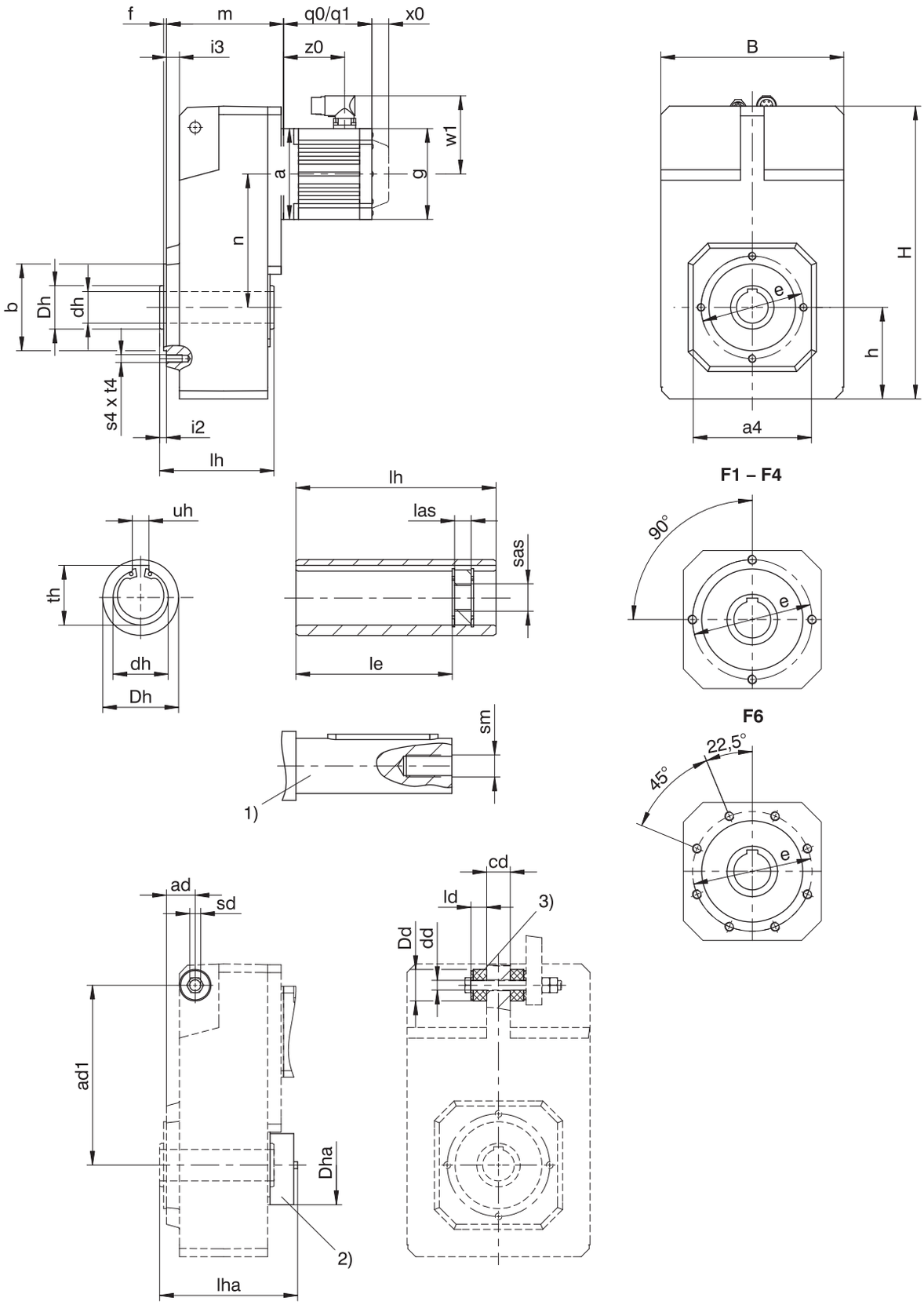

q0	Applies to motors without brake.	q1	Applies to motors with brake.
x0	EZ2: Applies only to motors with brake and encoders using an optical or inductive measuring method EZ3 – EZ8: Applies to encoders using an optical measuring method	w1	Different for the One Cable Solution (OCS), see the chapter [▶ 17.4]
1)	The length of the machine shaft must be at least 2.2 x ∅dh and the length of the feather key must be at least 2 x ∅dh.	2)	Cover (optional)

3) Rubber buffer for torque arm bracket (optional). Dimension ∅Dd = outer diameter of the rubber buffer when not tensioned.

Dimensions of gearboxes

Type	□a4	ad	ad1	Øb	B	cd	Ødd	Ødh	ØDd	ØDh	ØDha	Øe	f	h	H	i2	i3	ld	le	lh	las	lha	s4	sd	sm	sas	t4	th	uh
F1	100	28.5	150	70_{j6}	145	20	$11.0^{+0,5}$	20^{H7}	30	35	70	85	2.5	74	238.0	6.5	12.5	15	73	95	12	112	M8	M10	M6	M8	13	22.8	6^{JS9}
F2	130	32.0	181	95_{j6}	180	22	$11.0^{+0,5}$	25^{H7}	30	45	82	115	3.0	93	299.0	8.0	15.0	15	92	115	12	132	M8	M10	M10	M12	13	28.3	8^{JS9}
F3	150	36.5	205	110_{j6}	206	30	$14.0^{+0,5}$	30^{H7}	37	50	88	130	3.5	106	335.5	8.5	16.5	20	103	130	12	157	M10	M12	M10	M12	16	33.3	8^{JS9}
F4	150	36.5	228	110_{j6}	230	30	$14.0^{+0,5}$	40^{H7}	37	55	100	130	3.5	116	370.0	8.5	16.5	20	114	145	12	175	M10	M12	M16	M20	16	43.3	12^{JS9}
F6	180	44.5	270	130_{j6}	265	35	$22.0^{+0,5}$	50^{H7}	60	70	115	165	3.5	137	433.0	10.5	20.5	30	143	180	12	194	M10	M20	M16	M20	16	53.8	14^{JS9}

Dimensions of motors

Type	□g	q0	q1	w1	x0	z0
EZ203U	55	166.0	175.0	47.0	25	111.0
EZ301U	72	114.0	154.0	55.5	21	78.5
EZ302U	72	136.0	176.0	55.5	21	100.5
EZ303U	72	158.0	198.0	55.5	21	122.5
EZ401U	98	118.5	167.0	91.0	22	76.5
EZ402U	98	143.5	192.0	91.0	22	101.5
EZ404U	98	193.5	242.0	91.0	22	151.5
EZ501U	115	112.0	166.5	100.0	22	77.5
EZ502U	115	137.0	191.5	100.0	22	102.5
EZ503U	115	162.0	216.5	100.0	22	127.5
EZ505U	115	212.0	266.5	100.0	22	177.5
EZ701U	145	125.0	184.0	115.0	22	87.0
EZ702U	145	150.0	209.0	115.0	22	112.0
EZ703U	145	175.0	234.0	115.0	22	137.0
EZ705U	145	230.0	289.0	134.0	22	188.0
EZ813U	190	273.5	350.5	156.5	22	219.5
EZ815U	190	355.5	432.5	156.5	22	301.5

Dimensions of geared motors

Type	EZ2			EZ3			EZ4			EZ5			EZ7			EZ8		
	a	m	n	a	m	n	a	m	n	a	m	n	a	m	n	a	m	n
F102	□55	97.5	102.0	□72	97.5	102.0	□98	97.5	102.0	□115	101.5	102.0	□145	103.5	102.0	–	–	–
F202	–	–	–	□72	115.0	131.0	□98	115.0	131.0	□115	119.0	131.0	□145	121.0	131.0	–	–	–
F203	–	–	–	∅140	152.0	131.0	–	–	–	–	–	–	–	–	–	–	–	–
F302	–	–	–	∅140	129.5	149.5	∅140	129.5	149.5	□115	133.5	149.5	□145	135.5	149.5	–	–	–
F303	–	–	–	∅140	166.5	149.5	–	–	–	–	–	–	–	–	–	–	–	–
F402	–	–	–	–	–	–	–	–	–	∅160	148.5	169.0	□145	150.5	169.0	□190	153.5	169.0
F403	–	–	–	∅140	181.5	169.0	∅140	181.5	169.0	∅160	191.5	132.0	–	–	–	–	–	–
F602	–	–	–	–	–	–	–	–	–	∅160	179.5	196.0	□145	181.5	196.0	□190	184.5	196.0
F603	–	–	–	–	–	–	–	–	–	∅160	222.5	196.0	–	–	–	–	–	–

8.3.2 A shaft design (hollow shaft), GN housing design (pitch circle diameter + side fastening)

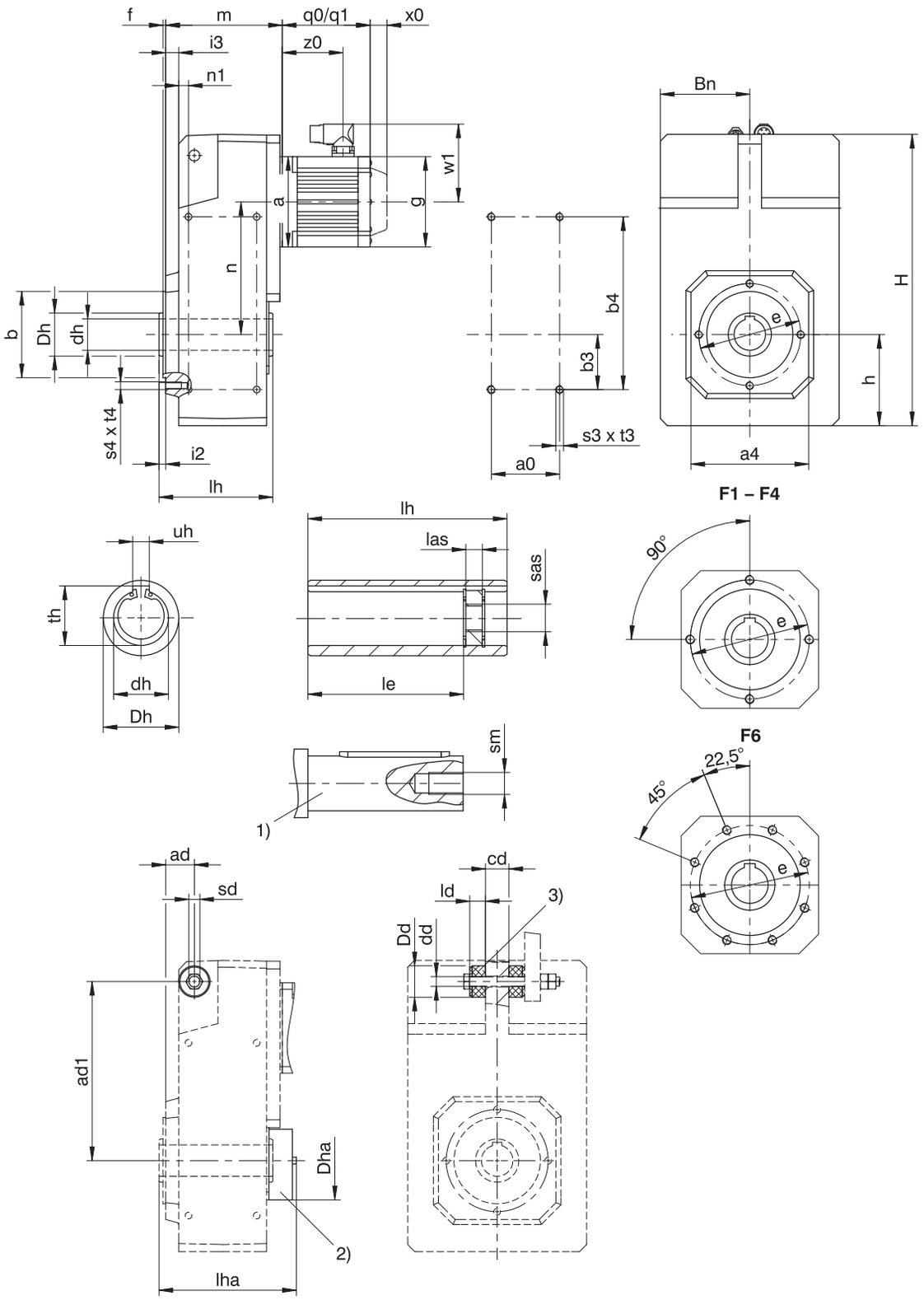

q0	Applies to motors without brake.	q1	Applies to motors with brake.
x0	EZ2: Applies only to motors with brake and encoders using an optical or inductive measuring method EZ3 – EZ8: Applies to encoders using an optical measuring method	w1	Different for the One Cable Solution (OCS), see the chapter [▶ 17.4]
1)	The length of the machine shaft must be at least 2.2 x ∅dh and the length of the feather key must be at least 2 x ∅dh.	2)	Cover (optional)

3) Rubber buffer for torque arm bracket (optional). Dimension ∅Dd = outer diameter of the rubber buffer when not tensioned.

Dimensions of gearboxes

Type	a0	□a4	ad	ad1	Øb	b3	b4	Bn	cd	Ødd	Ødh	ØDd	ØDh	ØDha	Øe	f	h	H
F1	50	100	28.5	150	70_{j6}	40	140	71	20	$11.0^{+0,5}$	20^{H7}	30	35	70	85	2.5	74	238.0
F2	64	130	32.0	181	95_{j6}	55	175	88	22	$11.0^{+0,5}$	25^{H7}	30	45	82	115	3.0	93	299.0
F3	72	150	36.5	205	110_{j6}	60	200	102	30	$14.0^{+0,5}$	30^{H7}	37	50	88	130	3.5	106	335.5
F4	87	150	36.5	228	110_{j6}	70	220	114	30	$14.0^{+0,5}$	40^{H7}	37	55	100	130	3.5	116	370.0
F6	108	180	44.5	270	130_{j6}	85	270	131	35	$22.0^{+0,5}$	50^{H7}	60	70	115	165	3.5	137	433.0

Type	i2	i3	ld	le	lh	las	lha	n1	s3	s4	sd	sm	sas	t3	t4	th	uh
F1	6.5	12.5	15	73	95	12	112	10.0	M6	M8	M10	M6	M8	11	13	22.8	6^{JS9}
F2	8.0	15.0	15	92	115	12	132	10.5	M8	M8	M10	M10	M12	13	13	28.3	8^{JS9}
F3	8.5	16.5	20	103	130	12	157	12.5	M10	M10	M12	M10	M12	16	16	33.3	8^{JS9}
F4	8.5	16.5	20	114	145	12	175	12.5	M10	M10	M12	M16	M20	16	16	43.3	12^{JS9}
F6	10.5	20.5	30	143	180	12	194	15.5	M12	M10	M20	M16	M20	19	16	53.8	14^{JS9}

Dimensions of motors

Type	□g	q0	q1	w1	x0	z0
EZ203U	55	166.0	175.0	47.0	25	111.0
EZ301U	72	114.0	154.0	55.5	21	78.5
EZ302U	72	136.0	176.0	55.5	21	100.5
EZ303U	72	158.0	198.0	55.5	21	122.5
EZ401U	98	118.5	167.0	91.0	22	76.5
EZ402U	98	143.5	192.0	91.0	22	101.5
EZ404U	98	193.5	242.0	91.0	22	151.5
EZ501U	115	112.0	166.5	100.0	22	77.5
EZ502U	115	137.0	191.5	100.0	22	102.5
EZ503U	115	162.0	216.5	100.0	22	127.5
EZ505U	115	212.0	266.5	100.0	22	177.5
EZ701U	145	125.0	184.0	115.0	22	87.0
EZ702U	145	150.0	209.0	115.0	22	112.0
EZ703U	145	175.0	234.0	115.0	22	137.0
EZ705U	145	230.0	289.0	134.0	22	188.0
EZ813U	190	273.5	350.5	156.5	22	219.5
EZ815U	190	355.5	432.5	156.5	22	301.5

Dimensions of geared motors

Type	EZ2			EZ3			EZ4			EZ5			EZ7			EZ8		
	a	m	n	a	m	n	a	m	n	a	m	n	a	m	n	a	m	n
F102	□55	97.5	102.0	□72	97.5	102.0	□98	97.5	102.0	□115	101.5	102.0	□145	103.5	102.0	–	–	–
F202	–	–	–	□72	115.0	131.0	□98	115.0	131.0	□115	119.0	131.0	□145	121.0	131.0	–	–	–
F203	–	–	–	∅140	152.0	131.0	–	–	–	–	–	–	–	–	–	–	–	–
F302	–	–	–	∅140	129.5	149.5	∅140	129.5	149.5	□115	133.5	149.5	□145	135.5	149.5	–	–	–
F303	–	–	–	∅140	166.5	149.5	–	–	–	–	–	–	–	–	–	–	–	–
F402	–	–	–	–	–	–	–	–	–	∅160	148.5	169.0	□145	150.5	169.0	□190	153.5	169.0
F403	–	–	–	∅140	181.5	169.0	∅140	181.5	169.0	∅160	191.5	132.0	–	–	–	–	–	–
F602	–	–	–	–	–	–	–	–	–	∅160	179.5	196.0	□145	181.5	196.0	□190	184.5	196.0
F603	–	–	–	–	–	–	–	–	–	∅160	222.5	196.0	–	–	–	–	–	–

8.3.3 A shaft design (hollow shaft), F housing design (round flange)

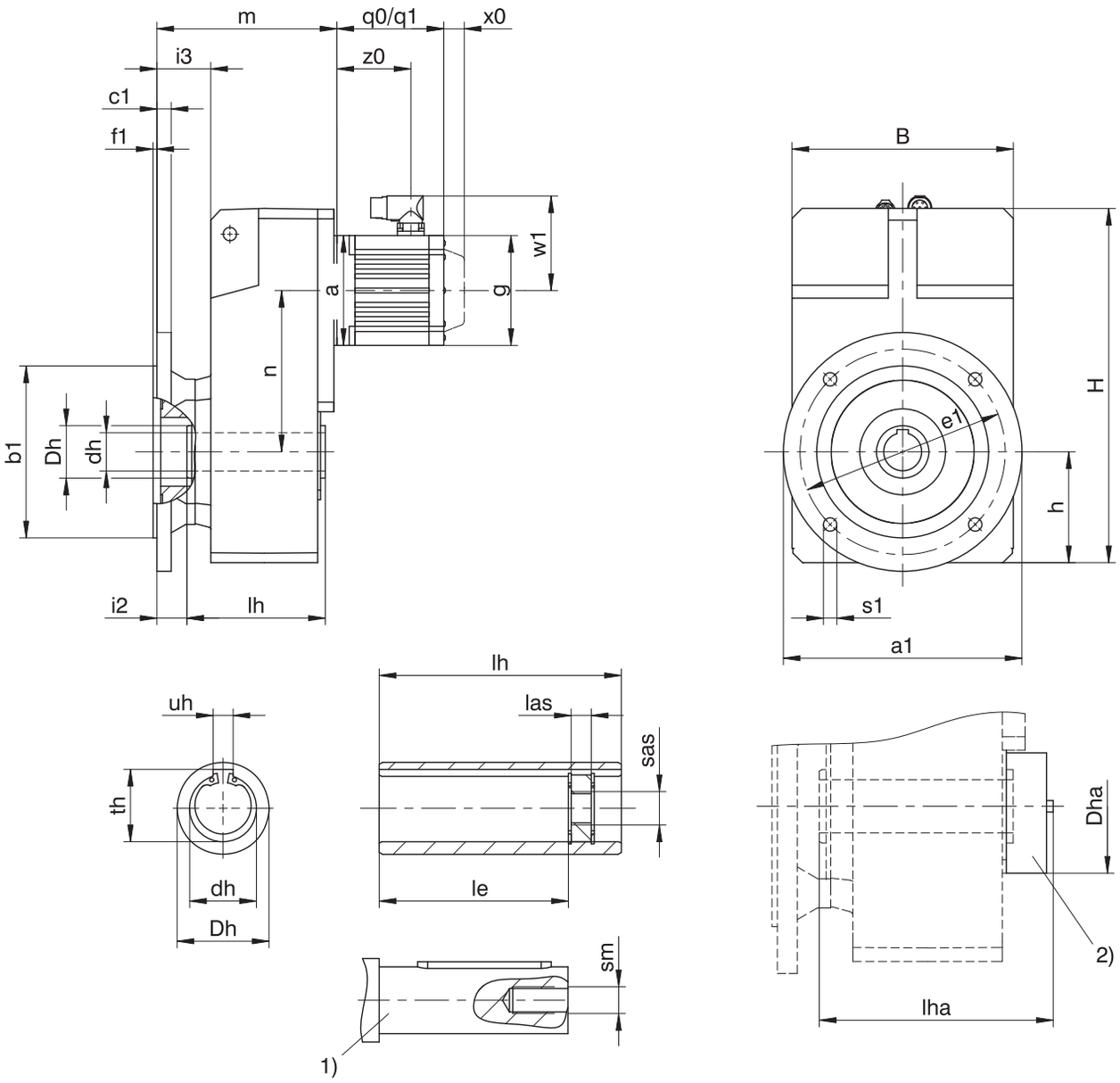

q0	Applies to motors without brake.	q1	Applies to motors with brake.
x0	EZ2: Applies only to motors with brake and encoders using an optical or inductive measuring method EZ3 – EZ8: Applies to encoders using an optical measuring method	w1	Different for the One Cable Solution (OCS), see the chapter [▶ 17.4]
1)	The length of the machine shaft must be at least 2.2 x ∅dh and the length of the feather key must be at least 2 x ∅dh.	2)	Cover (optional)

Dimensions of gearboxes

Type	Øa1	Øb1	B	c1	Ødh	ØDh	ØDha	Øe1	f1	h	H	i2	i3	le	lh	las	lha	Øs1	sm	sas	th	uh
F1	160	110_{j6}	145	10	20^{H7}	35	70	130	3.5	74	238.0	25.5	44.5	73	95	12	112	9	M6	M8	22.8	6^{JS9}
F2	200	130_{j6}	180	14	25^{H7}	45	82	165	3.5	93	299.0	30.0	53.0	92	115	12	132	11	M10	M12	28.3	8^{JS9}
F3	250	180_{j6}	206	15	30^{H7}	50	88	215	4.0	106	335.5	31.5	56.5	103	130	12	157	14	M10	M12	33.3	8^{JS9}
F4	250	180_{j6}	230	15	40^{H7}	55	100	215	4.0	116	370.0	31.5	56.5	114	145	12	175	14	M16	M20	43.3	12^{JS9}
F6	300	230_{j6}	265	17	50^{H7}	70	115	265	4.0	137	433.0	29.5	60.5	143	180	12	194	14	M16	M20	53.8	14^{JS9}

Dimensions of motors

Type	□g	q0	q1	w1	x0	z0
EZ203U	55	166.0	175.0	47.0	25	111.0
EZ301U	72	114.0	154.0	55.5	21	78.5
EZ302U	72	136.0	176.0	55.5	21	100.5
EZ303U	72	158.0	198.0	55.5	21	122.5
EZ401U	98	118.5	167.0	91.0	22	76.5
EZ402U	98	143.5	192.0	91.0	22	101.5
EZ404U	98	193.5	242.0	91.0	22	151.5
EZ501U	115	112.0	166.5	100.0	22	77.5
EZ502U	115	137.0	191.5	100.0	22	102.5
EZ503U	115	162.0	216.5	100.0	22	127.5
EZ505U	115	212.0	266.5	100.0	22	177.5
EZ701U	145	125.0	184.0	115.0	22	87.0
EZ702U	145	150.0	209.0	115.0	22	112.0
EZ703U	145	175.0	234.0	115.0	22	137.0
EZ705U	145	230.0	289.0	134.0	22	188.0
EZ813U	190	273.5	350.5	156.5	22	219.5
EZ815U	190	355.5	432.5	156.5	22	301.5

Dimensions of geared motors

Type	EZ2			EZ3			EZ4			EZ5			EZ7			EZ8		
	a	m	n	a	m	n	a	m	n	a	m	n	a	m	n	a	m	n
F102	□55	129.5	102.0	□72	129.5	102.0	□98	129.5	102.0	□115	133.5	102.0	□145	135.5	102.0	–	–	–
F202	–	–	–	□72	153.0	131.0	□98	153.0	131.0	□115	157.0	131.0	□145	159.0	131.0	–	–	–
F203	–	–	–	∅140	190.0	131.0	–	–	–	–	–	–	–	–	–	–	–	–
F302	–	–	–	∅140	169.5	149.5	∅140	169.5	149.5	□115	173.5	149.5	□145	175.5	149.5	–	–	–
F303	–	–	–	∅140	206.5	149.5	–	–	–	–	–	–	–	–	–	–	–	–
F402	–	–	–	–	–	–	–	–	–	∅160	188.5	169.0	□145	190.5	169.0	□190	193.5	169.0
F403	–	–	–	∅140	221.5	169.0	∅140	221.5	169.0	∅160	231.5	132.0	–	–	–	–	–	–
F602	–	–	–	–	–	–	–	–	–	∅160	219.5	196.0	□145	221.5	196.0	□190	224.5	196.0
F603	–	–	–	–	–	–	–	–	–	∅160	262.5	196.0	–	–	–	–	–	–

8.3.4 A shaft design (hollow shaft), Q housing design (square flange)

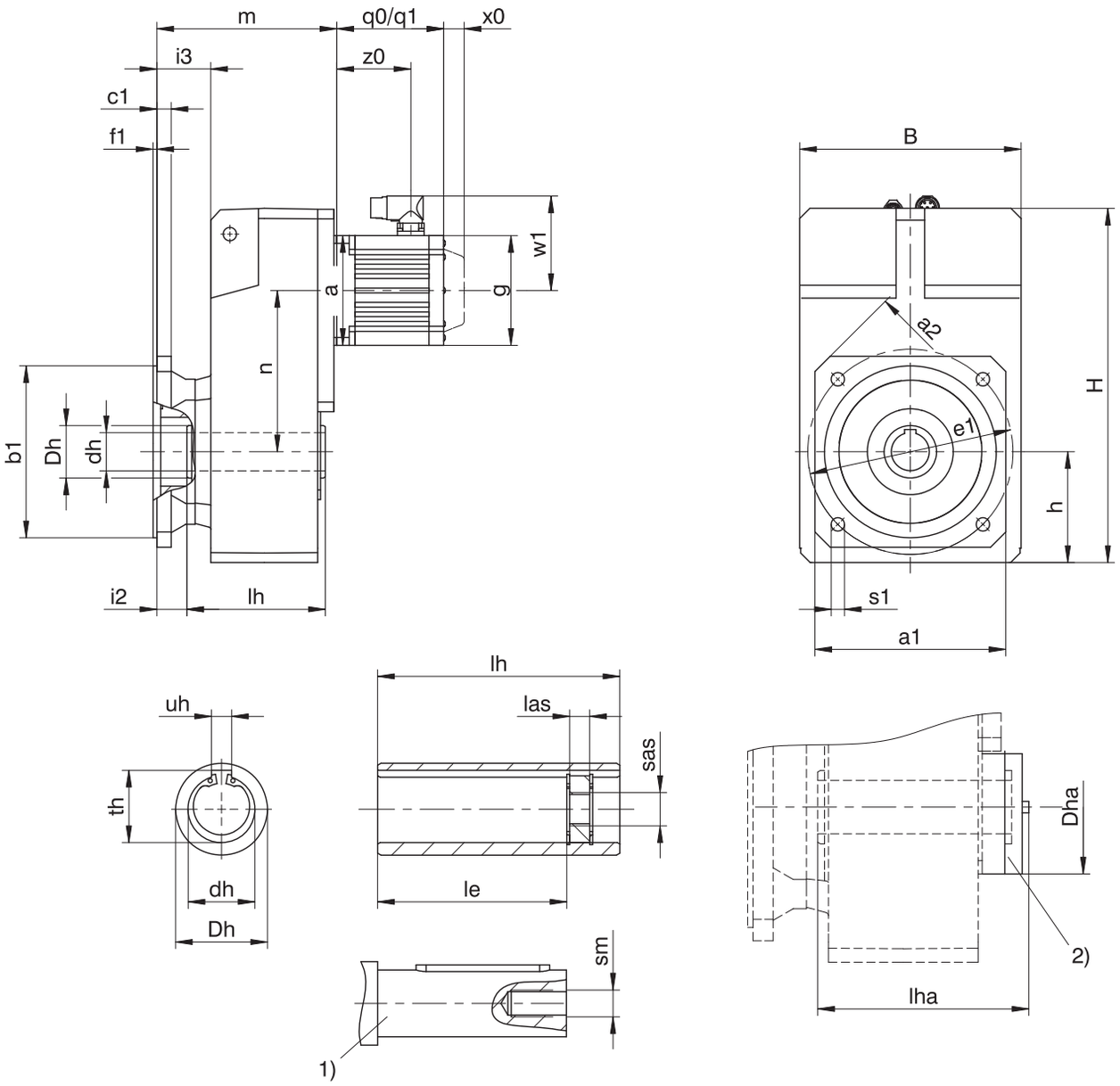

q0	Applies to motors without brake.	q1	Applies to motors with brake.
x0	EZ2: Applies only to motors with brake and encoders using an optical or inductive measuring method EZ3 – EZ8: Applies to encoders using an optical measuring method	w1	Different for the One Cable Solution (OCS), see the chapter [▶ 17.4]
1)	The length of the machine shaft must be at least 2.2 x ∅dh and the length of the feather key must be at least 2 x ∅dh.	2)	Cover (optional)

Dimensions of gearboxes

Type	□a1	□a2	Øb1	B	c1	Ødh	ØDh	ØDha	Øe1	f1	h	H	i2	i3	le	lh	las	lha	Øs1	sm	sas	th	uh
F1	125	160	110_{j6}	145	10	20^{H7}	35	70	130	3.5	74	238.0	25.5	44.5	73	95	12	112	9	M6	M8	22.8	6^{JS9}
F2	150	195	130_{j6}	180	14	25^{H7}	45	82	165	3.5	93	299.0	30.0	53.0	92	115	12	132	11	M10	M12	28.3	8^{JS9}
F3	200	260	180_{j6}	206	15	30^{H7}	50	88	215	4.0	106	335.5	31.5	56.5	103	130	12	157	14	M10	M12	33.3	8^{JS9}
F4	200	260	180_{j6}	230	15	40^{H7}	55	100	215	4.0	116	370.0	31.5	56.5	114	145	12	175	14	M16	M20	43.3	12^{JS9}
F6	250	325	230_{j6}	265	17	50^{H7}	70	115	265	4.0	137	433.0	29.5	60.5	143	180	12	194	14	M16	M20	53.8	14^{JS9}

Dimensions of motors

Type	□g	q0	q1	w1	x0	z0
EZ203U	55	166.0	175.0	47.0	25	111.0
EZ301U	72	114.0	154.0	55.5	21	78.5
EZ302U	72	136.0	176.0	55.5	21	100.5
EZ303U	72	158.0	198.0	55.5	21	122.5
EZ401U	98	118.5	167.0	91.0	22	76.5
EZ402U	98	143.5	192.0	91.0	22	101.5
EZ404U	98	193.5	242.0	91.0	22	151.5
EZ501U	115	112.0	166.5	100.0	22	77.5
EZ502U	115	137.0	191.5	100.0	22	102.5
EZ503U	115	162.0	216.5	100.0	22	127.5
EZ505U	115	212.0	266.5	100.0	22	177.5
EZ701U	145	125.0	184.0	115.0	22	87.0
EZ702U	145	150.0	209.0	115.0	22	112.0
EZ703U	145	175.0	234.0	115.0	22	137.0
EZ705U	145	230.0	289.0	134.0	22	188.0
EZ813U	190	273.5	350.5	156.5	22	219.5
EZ815U	190	355.5	432.5	156.5	22	301.5

Dimensions of geared motors

Type	EZ2			EZ3			EZ4			EZ5			EZ7			EZ8		
	a	m	n	a	m	n	a	m	n	a	m	n	a	m	n	a	m	n
F102	□55	129.5	102.0	□72	129.5	102.0	□98	129.5	102.0	□115	133.5	102.0	□145	135.5	102.0	–	–	–
F202	–	–	–	□72	153.0	131.0	□98	153.0	131.0	□115	157.0	131.0	□145	159.0	131.0	–	–	–
F203	–	–	–	∅140	190.0	131.0	–	–	–	–	–	–	–	–	–	–	–	–
F302	–	–	–	∅140	169.5	149.5	∅140	169.5	149.5	□115	173.5	149.5	□145	175.5	149.5	–	–	–
F303	–	–	–	∅140	206.5	149.5	–	–	–	–	–	–	–	–	–	–	–	–
F402	–	–	–	–	–	–	–	–	–	∅160	188.5	169.0	□145	190.5	169.0	□190	193.5	169.0
F403	–	–	–	∅140	221.5	169.0	∅140	221.5	169.0	∅160	231.5	132.0	–	–	–	–	–	–
F602	–	–	–	–	–	–	–	–	–	∅160	219.5	196.0	□145	221.5	196.0	□190	224.5	196.0
F603	–	–	–	–	–	–	–	–	–	∅160	262.5	196.0	–	–	–	–	–	–

8.3.5 V shaft design (solid shaft), F housing design (round flange)

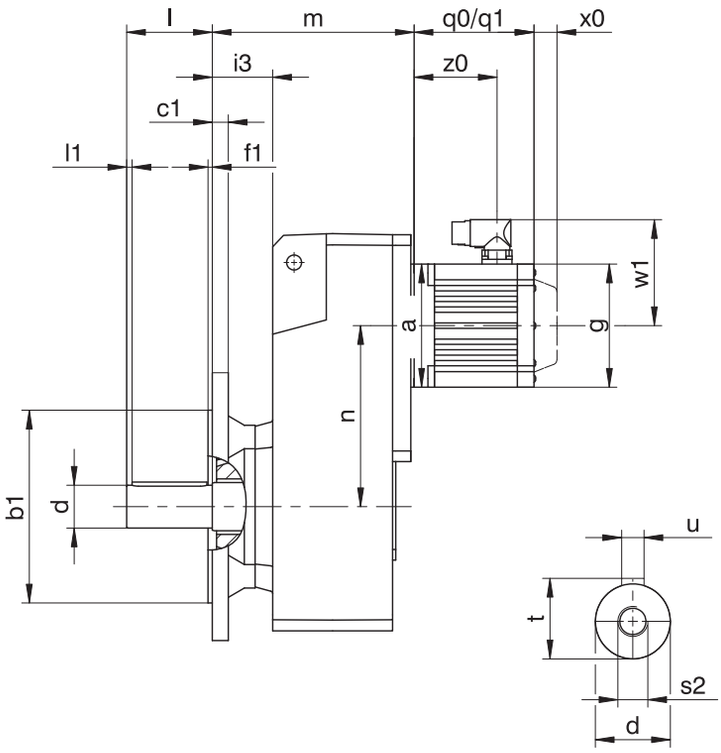

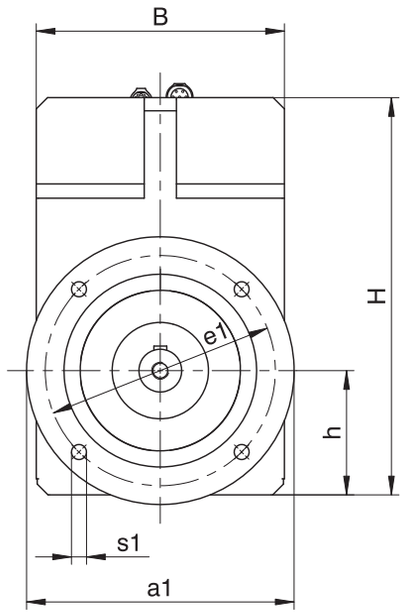

q0	Applies to motors without brake.	q1	Applies to motors with brake.
x0	EZ2: Applies only to motors with brake and encoders using an optical or inductive measuring method EZ3 – EZ8: Applies to encoders using an optical measuring method	w1	Different for the One Cable Solution (OCS), see the chapter [▶ 17.4]

Dimensions of gearboxes

Type	Øa1	Øb1	B	c1	Ød	Øe1	f1	h	H	i3	l	l1	Øs1	s2	t	u
F1	160	110_{j6}	145	10	25_{k6}	130	3.5	74	238.0	44.5	50	5	9	M10	28.0	A8×7×40
F2	200	130_{j6}	180	14	30_{k6}	165	3.5	93	299.0	53.0	60	5	11	M10	33.0	A8×7×50
F3	250	180_{j6}	206	15	35_{k6}	215	4.0	106	335.5	56.5	70	5	14	M12	38.0	A10×8×60
F4	250	180_{j6}	230	15	40_{k6}	215	4.0	116	370.0	56.5	80	5	14	M16	43.0	A12×8×70
F6	300	230_{j6}	265	17	50_{k6}	265	4.0	137	433.0	60.5	100	5	14	M16	53.5	A14×9×90

Dimensions of motors

Type	□g	q0	q1	w1	x0	z0
EZ203U	55	166.0	175.0	47.0	25	111.0
EZ301U	72	114.0	154.0	55.5	21	78.5
EZ302U	72	136.0	176.0	55.5	21	100.5
EZ303U	72	158.0	198.0	55.5	21	122.5
EZ401U	98	118.5	167.0	91.0	22	76.5
EZ402U	98	143.5	192.0	91.0	22	101.5
EZ404U	98	193.5	242.0	91.0	22	151.5
EZ501U	115	112.0	166.5	100.0	22	77.5
EZ502U	115	137.0	191.5	100.0	22	102.5
EZ503U	115	162.0	216.5	100.0	22	127.5
EZ505U	115	212.0	266.5	100.0	22	177.5
EZ701U	145	125.0	184.0	115.0	22	87.0
EZ702U	145	150.0	209.0	115.0	22	112.0
EZ703U	145	175.0	234.0	115.0	22	137.0
EZ705U	145	230.0	289.0	134.0	22	188.0
EZ813U	190	273.5	350.5	156.5	22	219.5
EZ815U	190	355.5	432.5	156.5	22	301.5

Dimensions of geared motors

Type	EZ2			EZ3			EZ4			EZ5			EZ7			EZ8		
	a	m	n	a	m	n	a	m	n	a	m	n	a	m	n	a	m	n
F102	□55	129.5	102.0	□72	129.5	102.0	□98	129.5	102.0	□115	133.5	102.0	□145	135.5	102.0	–	–	–
F202	–	–	–	□72	153.0	131.0	□98	153.0	131.0	□115	157.0	131.0	□145	159.0	131.0	–	–	–
F203	–	–	–	∅140	190.0	131.0	–	–	–	–	–	–	–	–	–	–	–	–
F302	–	–	–	∅140	169.5	149.5	∅140	169.5	149.5	□115	173.5	149.5	□145	175.5	149.5	–	–	–
F303	–	–	–	∅140	206.5	149.5	–	–	–	–	–	–	–	–	–	–	–	–
F402	–	–	–	–	–	–	–	–	–	∅160	188.5	169.0	□145	190.5	169.0	□190	193.5	169.0
F403	–	–	–	∅140	221.5	169.0	∅140	221.5	169.0	∅160	231.5	132.0	–	–	–	–	–	–
F602	–	–	–	–	–	–	–	–	–	∅160	219.5	196.0	□145	221.5	196.0	□190	224.5	196.0
F603	–	–	–	–	–	–	–	–	–	∅160	262.5	196.0	–	–	–	–	–	–

8.3.6 V shaft design (solid shaft), Q housing design (square flange)

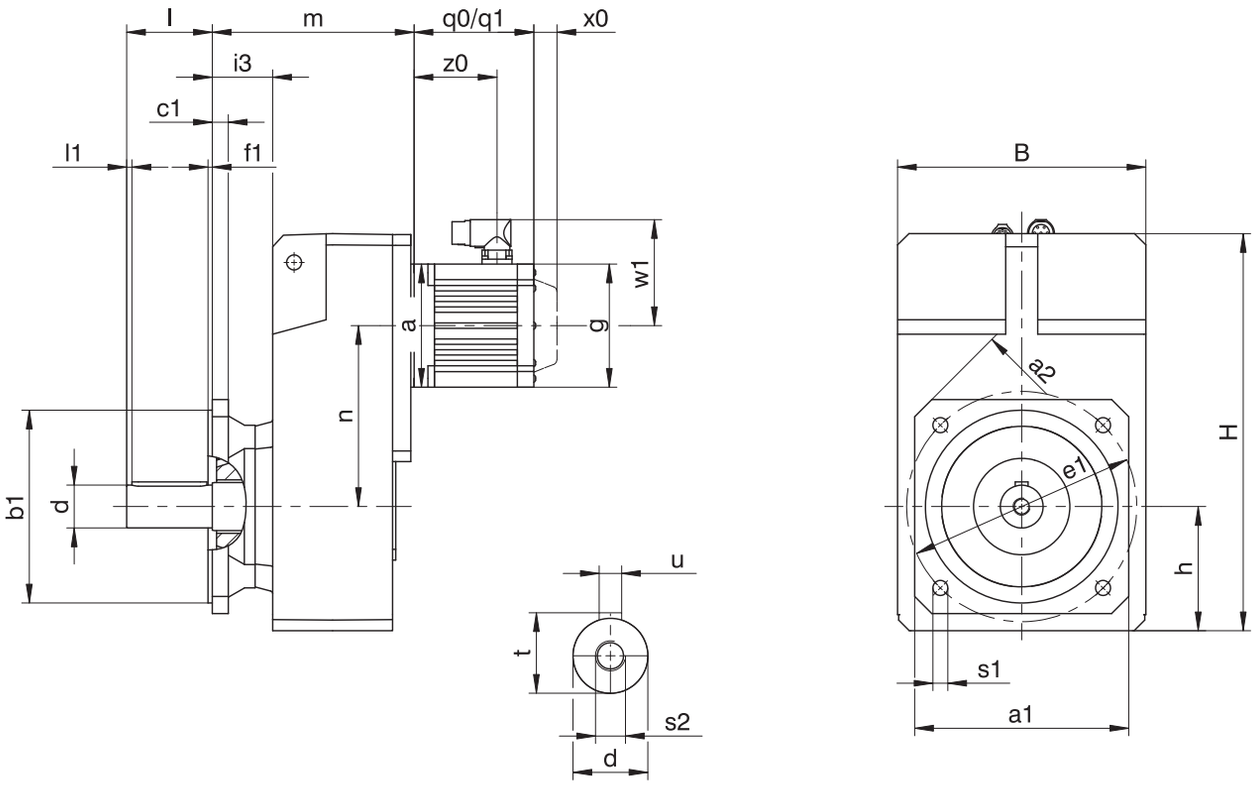

q0	Applies to motors without brake.	q1	Applies to motors with brake.
x0	EZ2: Applies only to motors with brake and encoders using an optical or inductive measuring method EZ3 – EZ8: Applies to encoders using an optical measuring method	w1	Different for the One Cable Solution (OCS), see the chapter [▶ 17.4]

Dimensions of gearboxes

Type	□a1	□a2	Øb1	c1	B	Ød	Øe1	f1	h	H	i3	l	l1	Øs1	s2	t	u
F1	125	160	110_{j6}	10	145	25_{k6}	130	3.5	74	238.0	44.5	50	5	9	M10	28.0	A8×7×40
F2	150	195	130_{j6}	14	180	30_{k6}	165	3.5	93	299.0	53.0	60	5	11	M10	33.0	A8×7×50
F3	200	260	180_{j6}	15	206	35_{k6}	215	4.0	106	335.5	56.5	70	5	14	M12	38.0	A10×8×60
F4	200	260	180_{j6}	15	230	40_{k6}	215	4.0	116	370.0	56.5	80	5	14	M16	43.0	A12×8×70
F6	250	325	230_{j6}	17	265	50_{k6}	265	4.0	137	433.0	60.5	100	5	14	M16	53.5	A14×9×90

Dimensions of motors

Type	□g	q0	q1	w1	x0	z0
EZ203U	55	166.0	175.0	47.0	25	111.0
EZ301U	72	114.0	154.0	55.5	21	78.5
EZ302U	72	136.0	176.0	55.5	21	100.5
EZ303U	72	158.0	198.0	55.5	21	122.5
EZ401U	98	118.5	167.0	91.0	22	76.5
EZ402U	98	143.5	192.0	91.0	22	101.5
EZ404U	98	193.5	242.0	91.0	22	151.5
EZ501U	115	112.0	166.5	100.0	22	77.5
EZ502U	115	137.0	191.5	100.0	22	102.5
EZ503U	115	162.0	216.5	100.0	22	127.5
EZ505U	115	212.0	266.5	100.0	22	177.5
EZ701U	145	125.0	184.0	115.0	22	87.0
EZ702U	145	150.0	209.0	115.0	22	112.0
EZ703U	145	175.0	234.0	115.0	22	137.0
EZ705U	145	230.0	289.0	134.0	22	188.0
EZ813U	190	273.5	350.5	156.5	22	219.5
EZ815U	190	355.5	432.5	156.5	22	301.5

Dimensions of geared motors

Type	EZ2			EZ3			EZ4			EZ5			EZ7			EZ8		
	a	m	n	a	m	n	a	m	n	a	m	n	a	m	n	a	m	n
F102	□55	129.5	102.0	□72	129.5	102.0	□98	129.5	102.0	□115	133.5	102.0	□145	135.5	102.0	–	–	–
F202	–	–	–	□72	153.0	131.0	□98	153.0	131.0	□115	157.0	131.0	□145	159.0	131.0	–	–	–
F203	–	–	–	∅140	190.0	131.0	–	–	–	–	–	–	–	–	–	–	–	–
F302	–	–	–	∅140	169.5	149.5	∅140	169.5	149.5	□115	173.5	149.5	□145	175.5	149.5	–	–	–
F303	–	–	–	∅140	206.5	149.5	–	–	–	–	–	–	–	–	–	–	–	–
F402	–	–	–	–	–	–	–	–	–	∅160	188.5	169.0	□145	190.5	169.0	□190	193.5	169.0
F403	–	–	–	∅140	221.5	169.0	∅140	221.5	169.0	∅160	231.5	132.0	–	–	–	–	–	–
F602	–	–	–	–	–	–	–	–	–	∅160	219.5	196.0	□145	221.5	196.0	□190	224.5	196.0
F603	–	–	–	–	–	–	–	–	–	∅160	262.5	196.0	–	–	–	–	–	–

8.3.7 S shaft design (hollow shaft with shrink disk), G housing design (pitch circle diameter)

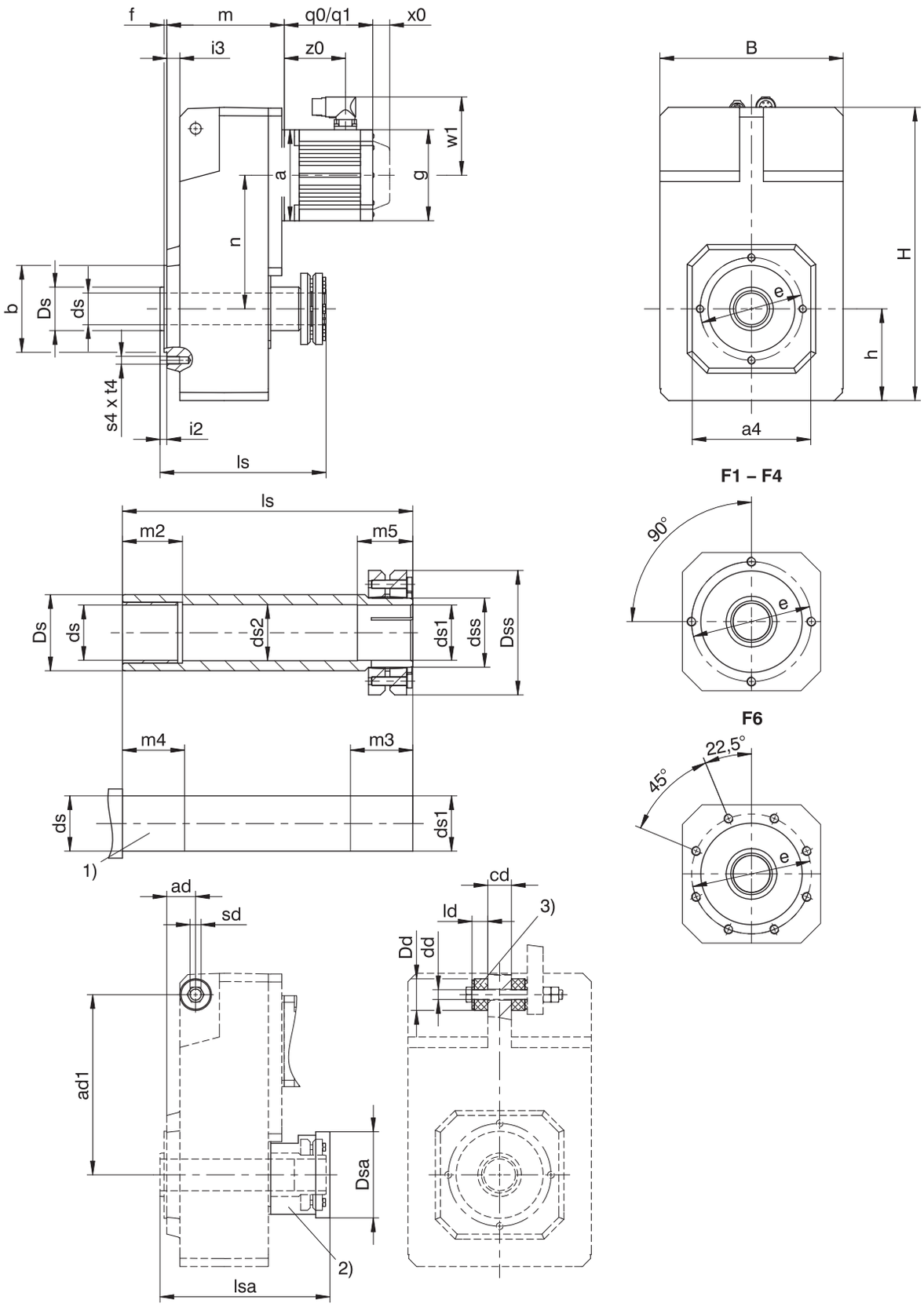

q0	Applies to motors without brake.	q1	Applies to motors with brake.
x0	EZ2: Applies only to motors with brake and encoders using an optical or inductive measuring method EZ3 – EZ8: Applies to encoders using an optical measuring method	w1	Different for the One Cable Solution (OCS), see the chapter [▶ 17.4]
1)	Machine shaft: The dimension ls must meet or exceed the specified value.	2)	Cover (optional)

3) Rubber buffer for torque arm bracket (optional). Dimension ∅Dd = outer diameter of the rubber buffer when not tensioned.

Dimensions of gearboxes

Type	□a4	ad	ad1	Øb	B	cd	Ødd	Øds	Øds1	Øds2	Ødss	ØDd	ØDs	ØDsa	ØDss	Øe	f	h	H	i2	i3	ld	ls	lsa	m2	m3	m4	m5	s4	sd	t4
F1	100	28.5	150	70_{j6}	145	20	$11.0^{+0,5}$	20_{h9}	$20_{h9}{}^{H7}$	20.5	24	30	35	63	50	85	2.5	74	238.0	6.5	12.5	15	146	150	20	31	25	26	M8	M10	13
F2	130	32.0	181	95_{j6}	180	22	$11.0^{+0,5}$	25_{h9}	$25_{h9}{}^{H7}$	25.5	30	30	45	73	60	115	3.0	93	299.0	8.0	15.0	15	175	180	20	37	25	32	M8	M10	13
F3	150	36.5	205	110_{j6}	206	30	$14.0^{+0,5}$	30_{h9}	$30_{h9}{}^{H7}$	30.5	36	37	50	83	72	130	3.5	106	335.5	8.5	16.5	20	192	196	25	37	30	32	M10	M12	16
F4	150	36.5	228	110_{j6}	230	30	$14.0^{+0,5}$	40_{h9}	$40_{h9}{}^{H7}$	40.5	50	37	55	108	90	130	3.5	116	370.0	8.5	16.5	20	210	215	40	45	45	40	M10	M12	16
F6	180	44.5	270	130_{j6}	265	35	$22.0^{+0,5}$	50_{h9}	$50_{h9}{}^{H7}$	50.5	62	60	70	128	106	165	3.5	137	433.0	10.5	20.5	30	248	251	40	47	45	42	M10	M20	16

Dimensions of motors

Type	□g	q0	q1	w1	x0	z0
EZ203U	55	166.0	175.0	47.0	25	111.0
EZ301U	72	114.0	154.0	55.5	21	78.5
EZ302U	72	136.0	176.0	55.5	21	100.5
EZ303U	72	158.0	198.0	55.5	21	122.5
EZ401U	98	118.5	167.0	91.0	22	76.5
EZ402U	98	143.5	192.0	91.0	22	101.5
EZ404U	98	193.5	242.0	91.0	22	151.5
EZ501U	115	112.0	166.5	100.0	22	77.5
EZ502U	115	137.0	191.5	100.0	22	102.5
EZ503U	115	162.0	216.5	100.0	22	127.5
EZ505U	115	212.0	266.5	100.0	22	177.5
EZ701U	145	125.0	184.0	115.0	22	87.0
EZ702U	145	150.0	209.0	115.0	22	112.0
EZ703U	145	175.0	234.0	115.0	22	137.0
EZ705U	145	230.0	289.0	134.0	22	188.0
EZ813U	190	273.5	350.5	156.5	22	219.5
EZ815U	190	355.5	432.5	156.5	22	301.5

Dimensions of geared motors

Type	EZ2			EZ3			EZ4			EZ5			EZ7			EZ8		
	a	m	n	a	m	n	a	m	n	a	m	n	a	m	n	a	m	n
F102	□55	97.5	102.0	□72	97.5	102.0	□98	97.5	102.0	□115	101.5	102.0	□145	103.5	102.0	–	–	–
F202	–	–	–	□72	115.0	131.0	□98	115.0	131.0	□115	119.0	131.0	□145	121.0	131.0	–	–	–
F203	–	–	–	∅140	152.0	131.0	–	–	–	–	–	–	–	–	–	–	–	–
F302	–	–	–	∅140	129.5	149.5	∅140	129.5	149.5	□115	133.5	149.5	□145	135.5	149.5	–	–	–
F303	–	–	–	∅140	166.5	149.5	–	–	–	–	–	–	–	–	–	–	–	–
F402	–	–	–	–	–	–	–	–	–	∅160	148.5	169.0	□145	150.5	169.0	□190	153.5	169.0
F403	–	–	–	∅140	181.5	169.0	∅140	181.5	169.0	∅160	191.5	132.0	–	–	–	–	–	–
F602	–	–	–	–	–	–	–	–	–	∅160	179.5	196.0	□145	181.5	196.0	□190	184.5	196.0
F603	–	–	–	–	–	–	–	–	–	∅160	222.5	196.0	–	–	–	–	–	–

8.3.8 S shaft design (hollow shaft with shrink disk), GN housing design (pitch circle diameter + side fastening)

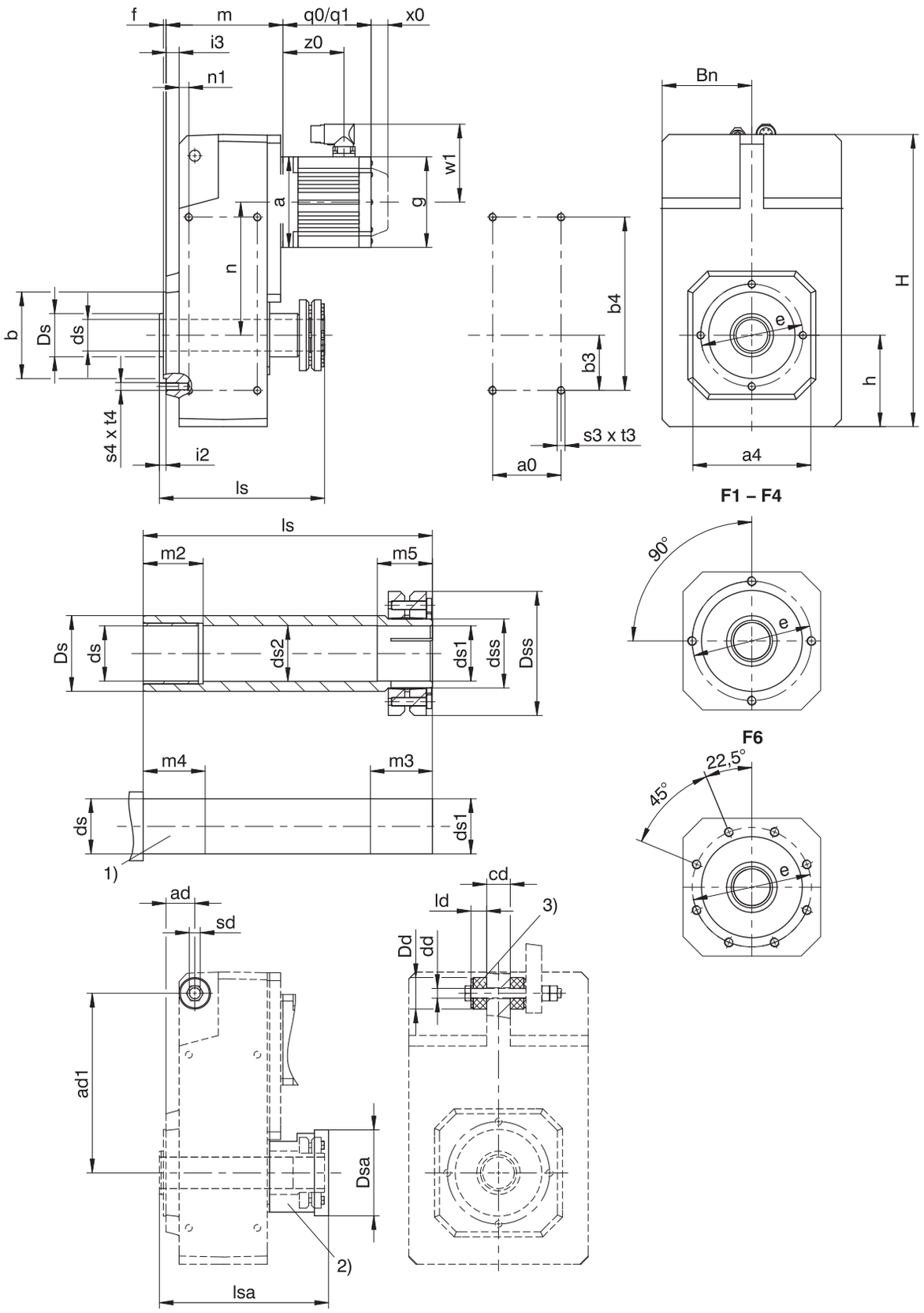

q0	Applies to motors without brake.	q1	Applies to motors with brake.
x0	EZ2: Applies only to motors with brake and encoders using an optical or inductive measuring method EZ3 – EZ8: Applies to encoders using an optical measuring method	w1	Different for the One Cable Solution (OCS), see the chapter [▶ 17.4]
1)	Machine shaft: The dimension ls must meet or exceed the specified value.	2)	Cover (optional)

3) Rubber buffer for torque arm bracket (optional). Dimension ∅Dd = outer diameter of the rubber buffer when not tensioned.

Dimensions of gearboxes

Type	a0	□a4	ad	ad1	Øb	b3	b4	Bn	cd	Ødd	Øds	Øds1	Øds2	Ødss	ØDd	ØDs	ØDsa	ØDss
F1	50	100	29.5	150	70_{j6}	40	140	71	20	$11.0^{+0,5}$	20_{h9}	20_{h9}^{H7}	20.5	24	30	63	63	50
F2	64	130	33.0	181	95_{j6}	55	175	88	22	$11.0^{+0,5}$	25_{h9}	25_{h9}^{H7}	25.5	30	30	73	73	60
F3	72	150	38.5	205	110_{j6}	60	200	102	30	$14.0^{+0,5}$	30_{h9}	30_{h9}^{H7}	30.5	36	37	83	83	72
F4	87	150	38.5	228	110_{j6}	70	220	114	30	$14.0^{+0,5}$	40_{h9}	40_{h9}^{H7}	40.5	50	37	108	108	90
F6	108	180	44.5	270	130_{j6}	85	270	131	35	$22.0^{+0,5}$	50_{h9}	50_{h9}^{H7}	50.5	62	60	128	128	106

Type	Øe	f	h	H	i2	i3	ld	ls	lsa	n1	m2	m3	m4	m5	s3	s4	sd	t3	t4
F1	85	2.5	74	238.0	6.5	12.5	15	146	150	10	20	31	25	26	M6	M8	M10	11	13
F2	115	3.0	93	299.0	8.0	15.0	15	175	180	10.5	20	37	25	32	M8	M8	M10	13	13
F3	130	3.5	106	335.5	8.5	16.5	20	192	196	12.5	25	37	30	32	M10	M10	M12	16	16
F4	130	3.5	116	370.0	8.5	16.5	20	210	215	12.5	40	45	45	40	M10	M10	M12	16	16
F6	165	3.5	137	433.0	10.5	20.5	30	248	251	15.5	40	47	45	42	M12	M10	M20	19	16

Dimensions of motors

Type	□g	q0	q1	w1	x0	z0
EZ203U	55	166.0	175.0	47.0	25	111.0
EZ301U	72	114.0	154.0	55.5	21	78.5
EZ302U	72	136.0	176.0	55.5	21	100.5
EZ303U	72	158.0	198.0	55.5	21	122.5
EZ401U	98	118.5	167.0	91.0	22	76.5
EZ402U	98	143.5	192.0	91.0	22	101.5
EZ404U	98	193.5	242.0	91.0	22	151.5
EZ501U	115	112.0	166.5	100.0	22	77.5
EZ502U	115	137.0	191.5	100.0	22	102.5
EZ503U	115	162.0	216.5	100.0	22	127.5
EZ505U	115	212.0	266.5	100.0	22	177.5
EZ701U	145	125.0	184.0	115.0	22	87.0
EZ702U	145	150.0	209.0	115.0	22	112.0
EZ703U	145	175.0	234.0	115.0	22	137.0
EZ705U	145	230.0	289.0	134.0	22	188.0
EZ813U	190	273.5	350.5	156.5	22	219.5
EZ815U	190	355.5	432.5	156.5	22	301.5

Dimensions of geared motors

Type	EZ2			EZ3			EZ4			EZ5			EZ7			EZ8		
	a	m	n	a	m	n	a	m	n	a	m	n	a	m	n	a	m	n
F102	□55	97.5	102.0	□72	97.5	102.0	□98	97.5	102.0	□115	101.5	102.0	□145	103.5	102.0	–	–	–
F202	–	–	–	□72	115.0	131.0	□98	115.0	131.0	□115	119.0	131.0	□145	121.0	131.0	–	–	–
F203	–	–	–	∅140	152.0	131.0	–	–	–	–	–	–	–	–	–	–	–	–
F302	–	–	–	∅140	129.5	149.5	∅140	129.5	149.5	□115	133.5	149.5	□145	135.5	149.5	–	–	–
F303	–	–	–	∅140	166.5	149.5	–	–	–	–	–	–	–	–	–	–	–	–
F402	–	–	–	–	–	–	–	–	–	∅160	148.5	169.0	□145	150.5	169.0	□190	153.5	169.0
F403	–	–	–	∅140	181.5	169.0	∅140	181.5	169.0	∅160	191.5	132.0	–	–	–	–	–	–
F602	–	–	–	–	–	–	–	–	–	∅160	179.5	196.0	□145	181.5	196.0	□190	184.5	196.0
F603	–	–	–	–	–	–	–	–	–	∅160	222.5	196.0	–	–	–	–	–	–

8.3.9 S shaft design (hollow shaft with shrink disk), F housing design (round flange)

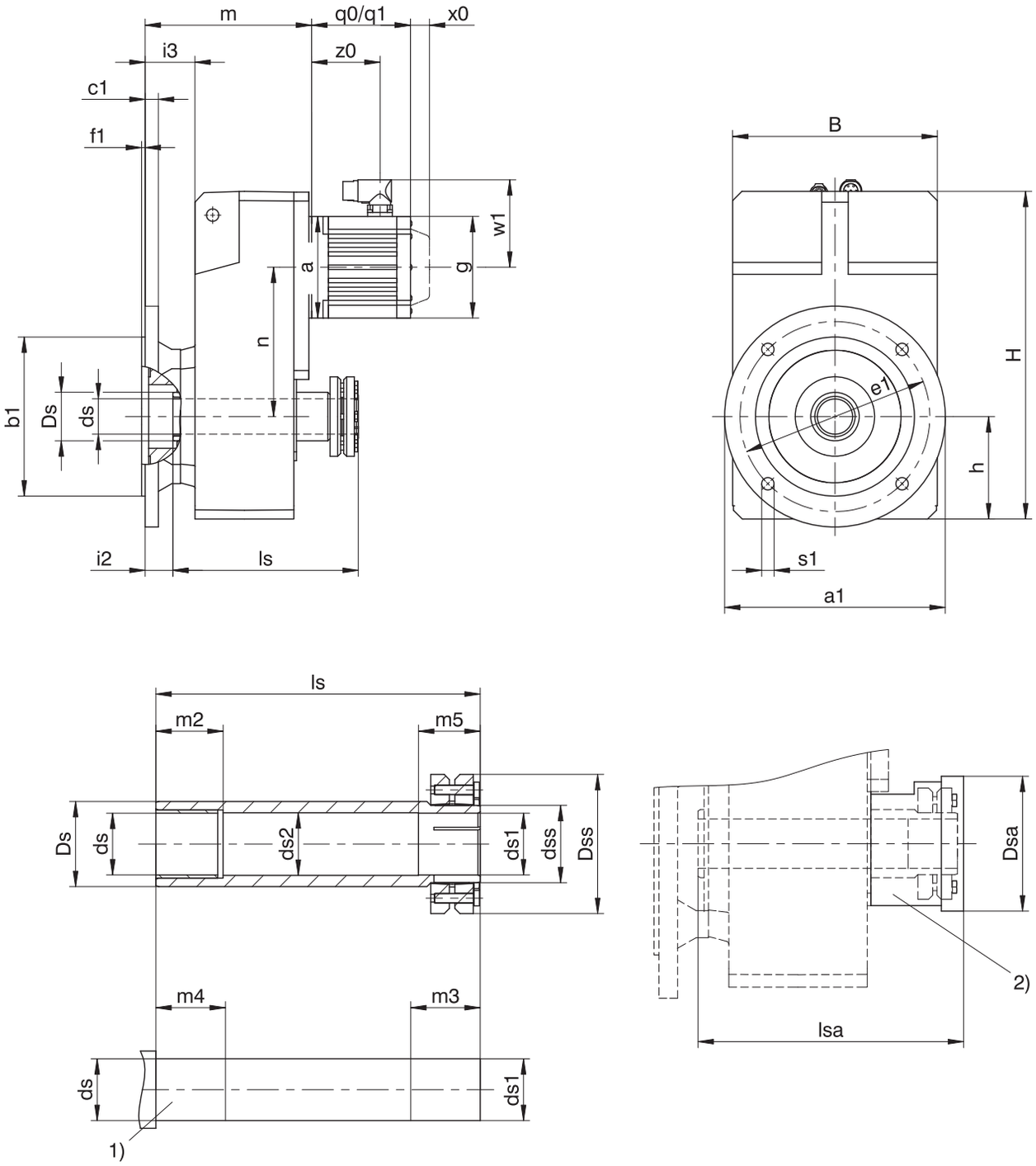

q0	Applies to motors without brake.	q1	Applies to motors with brake.
x0	EZ2: Applies only to motors with brake and encoders using an optical or inductive measuring method EZ3 – EZ8: Applies to encoders using an optical measuring method	w1	Different for the One Cable Solution (OCS), see the chapter [▶ 17.4]
1)	Machine shaft: The dimension ls must meet or exceed the specified value.	2)	Cover (optional)

Dimensions of gearboxes

Type	Øa1	Øb1	B	c1	Ød$_{h9}$	Ød1$_{h9}^{H7}$	Ød2	Ødss	ØDs	ØDsa	ØDss	Øe1	f1	h	H	i2	i3	ls	lsa	m2	m3	m4	m5	Øs1
F1	160	110$_{j6}$	145	10	20$_{h9}$	20$_{h9}^{H7}$	20.5	24	35	63	50	130	3.5	74	238.0	25.5	44.5	146	150	20	31	25	26	9
F2	200	130$_{j6}$	180	14	25$_{h9}$	25$_{h9}^{H7}$	25.5	30	45	73	60	165	3.5	93	299.0	30.0	53.0	175	180	20	37	25	32	11
F3	250	180$_{j6}$	206	15	30$_{h9}$	30$_{h9}^{H7}$	30.5	36	50	83	72	215	4.0	106	335.5	31.5	56.5	192	196	25	37	30	32	14
F4	250	180$_{j6}$	230	15	40$_{h9}$	40$_{h9}^{H7}$	40.5	50	55	108	90	215	4.0	116	370.0	31.5	56.5	210	215	40	45	45	40	14
F6	300	230$_{j6}$	265	17	50$_{h9}$	50$_{h9}^{H7}$	50.5	62	70	128	106	265	4.0	137	433.0	29.5	60.5	248	251	40	47	45	42	14

Dimensions of motors

Type	□g	q0	q1	w1	x0	z0
EZ203U	55	166.0	175.0	47.0	25	111.0
EZ301U	72	114.0	154.0	55.5	21	78.5
EZ302U	72	136.0	176.0	55.5	21	100.5
EZ303U	72	158.0	198.0	55.5	21	122.5
EZ401U	98	118.5	167.0	91.0	22	76.5
EZ402U	98	143.5	192.0	91.0	22	101.5
EZ404U	98	193.5	242.0	91.0	22	151.5
EZ501U	115	112.0	166.5	100.0	22	77.5
EZ502U	115	137.0	191.5	100.0	22	102.5
EZ503U	115	162.0	216.5	100.0	22	127.5
EZ505U	115	212.0	266.5	100.0	22	177.5
EZ701U	145	125.0	184.0	115.0	22	87.0
EZ702U	145	150.0	209.0	115.0	22	112.0
EZ703U	145	175.0	234.0	115.0	22	137.0
EZ705U	145	230.0	289.0	134.0	22	188.0
EZ813U	190	273.5	350.5	156.5	22	219.5
EZ815U	190	355.5	432.5	156.5	22	301.5

Dimensions of geared motors

Type	EZ2			EZ3			EZ4			EZ5			EZ7			EZ8		
	a	m	n	a	m	n	a	m	n	a	m	n	a	m	n	a	m	n
F102	□55	129.5	102.0	□72	129.5	102.0	□98	129.5	102.0	□115	133.5	102.0	□145	135.5	102.0	–	–	–
F202	–	–	–	□72	153.0	131.0	□98	153.0	131.0	□115	157.0	131.0	□145	159.0	131.0	–	–	–
F203	–	–	–	∅140	190.0	131.0	–	–	–	–	–	–	–	–	–	–	–	–
F302	–	–	–	∅140	169.5	149.5	∅140	169.5	149.5	□115	173.5	149.5	□145	175.5	149.5	–	–	–
F303	–	–	–	∅140	206.5	149.5	–	–	–	–	–	–	–	–	–	–	–	–
F402	–	–	–	–	–	–	–	–	–	∅160	188.5	169.0	□145	190.5	169.0	□190	193.5	169.0
F403	–	–	–	∅140	221.5	169.0	∅140	221.5	169.0	∅160	231.5	132.0	–	–	–	–	–	–
F602	–	–	–	–	–	–	–	–	–	∅160	219.5	196.0	□145	221.5	196.0	□190	224.5	196.0
F603	–	–	–	–	–	–	–	–	–	∅160	262.5	196.0	–	–	–	–	–	–

8.3.10 S shaft design (hollow shaft with shrink disk), Q housing design (square flange)

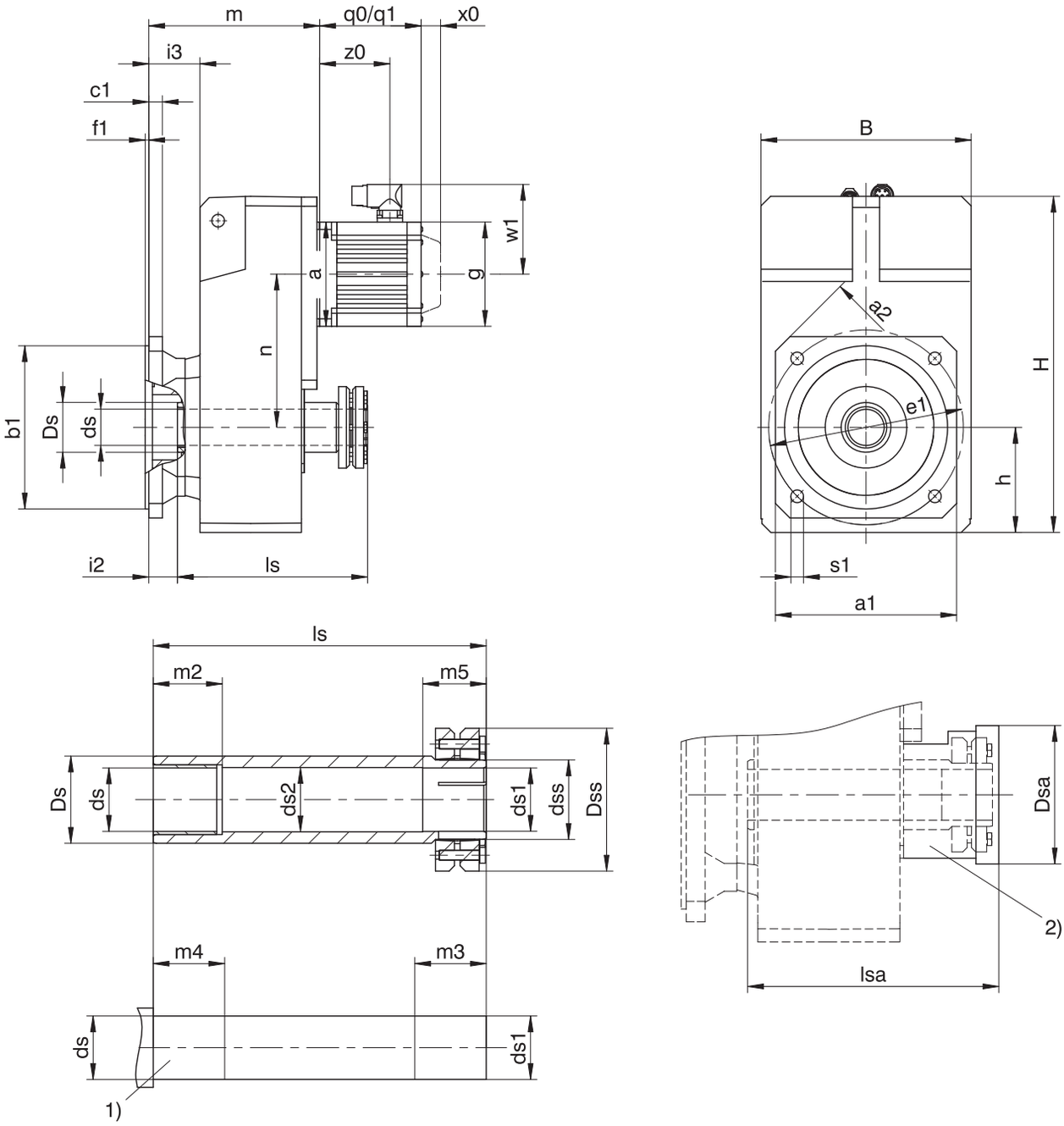

q0	Applies to motors without brake.	q1	Applies to motors with brake.
x0	EZ2: Applies only to motors with brake and encoders using an optical or inductive measuring method EZ3 – EZ8: Applies to encoders using an optical measuring method	w1	Different for the One Cable Solution (OCS), see the chapter [▶ 17.4]
1)	Machine shaft: The dimension ls must meet or exceed the specified value.	2)	Cover (optional)

Dimensions of gearboxes

Type	□a1	□a2	Øb1	B	c1	Ød	Ød1	Ød2	Ødss	ØDs	ØDsa	ØDss	Øe1	f1	h	H	i2	i3	ls	lsa	m2	m3	m4	m5	Øs1
F1	125	160	110_{j6}	145	10	20_{h9}	20_{h9}^{H7}	20.5	24	35	63	50	130	3.5	74	238.0	25.5	44.5	146	150	20	31	25	26	9
F2	150	195	130_{j6}	180	14	25_{h9}	25_{h9}^{H7}	25.5	30	45	73	60	165	3.5	93	299.0	30.0	53.0	175	180	20	37	25	32	11
F3	200	260	180_{j6}	206	15	30_{h9}	30_{h9}^{H7}	30.5	36	50	83	72	215	4.0	106	335.5	31.5	56.5	192	196	25	37	30	32	14
F4	200	260	180_{j6}	230	15	40_{h9}	40_{h9}^{H7}	40.5	50	55	108	90	215	4.0	116	370.0	31.5	56.5	210	215	40	45	45	40	14
F6	250	325	230_{j6}	265	17	50_{h9}	50_{h9}^{H7}	50.5	62	70	128	106	265	4.0	137	433.0	29.5	60.5	248	251	40	47	45	42	14

Dimensions of motors

Type	□g	q0	q1	w1	x0	z0
EZ203U	55	166.0	175.0	47.0	25	111.0
EZ301U	72	114.0	154.0	55.5	21	78.5
EZ302U	72	136.0	176.0	55.5	21	100.5
EZ303U	72	158.0	198.0	55.5	21	122.5
EZ401U	98	118.5	167.0	91.0	22	76.5
EZ402U	98	143.5	192.0	91.0	22	101.5
EZ404U	98	193.5	242.0	91.0	22	151.5
EZ501U	115	112.0	166.5	100.0	22	77.5
EZ502U	115	137.0	191.5	100.0	22	102.5
EZ503U	115	162.0	216.5	100.0	22	127.5
EZ505U	115	212.0	266.5	100.0	22	177.5
EZ701U	145	125.0	184.0	115.0	22	87.0
EZ702U	145	150.0	209.0	115.0	22	112.0
EZ703U	145	175.0	234.0	115.0	22	137.0
EZ705U	145	230.0	289.0	134.0	22	188.0
EZ813U	190	273.5	350.5	156.5	22	219.5
EZ815U	190	355.5	432.5	156.5	22	301.5

Dimensions of geared motors

Type	EZ2			EZ3			EZ4			EZ5			EZ7			EZ8		
	a	m	n	a	m	n	a	m	n	a	m	n	a	m	n	a	m	n
F102	□55	129.5	102.0	□72	129.5	102.0	□98	129.5	102.0	□115	133.5	102.0	□145	135.5	102.0	–	–	–
F202	–	–	–	□72	153.0	131.0	□98	153.0	131.0	□115	157.0	131.0	□145	159.0	131.0	–	–	–
F203	–	–	–	∅140	190.0	131.0	–	–	–	–	–	–	–	–	–	–	–	–
F302	–	–	–	∅140	169.5	149.5	∅140	169.5	149.5	□115	173.5	149.5	□145	175.5	149.5	–	–	–
F303	–	–	–	∅140	206.5	149.5	–	–	–	–	–	–	–	–	–	–	–	–
F402	–	–	–	–	–	–	–	–	–	∅160	188.5	169.0	□145	190.5	169.0	□190	193.5	169.0
F403	–	–	–	∅140	221.5	169.0	∅140	221.5	169.0	∅160	231.5	132.0	–	–	–	–	–	–
F602	–	–	–	–	–	–	–	–	–	∅160	219.5	196.0	□145	221.5	196.0	□190	224.5	196.0
F603	–	–	–	–	–	–	–	–	–	∅160	262.5	196.0	–	–	–	–	–	–

8.4 Type designation

This chapter shows you an explanation of the type designation with the associated options.

Additional ordering information not included in the type designation can be found at the end of the chapter.

Example code

F	2	0	2	A	G	0700	EZ401U

Explanation

Code	Designation	Design
F	Type	Offset helical gearbox
2	Size	2 (example)
0	Generation	Generation 0
2	Stages	Two-stage
3		Three-stage
A	Shaft	Hollow shaft with keyway
S		Hollow shaft with shrink ring
V		Solid shaft
G	Housing	Pitch circle diameter
F		Round flange
Q		Square flange
GN		Pitch circle diameter + side fastening
/0700	Transmission ratio (i x 10 rounded)	i = 70.13 (example)
EZ401U	Motor	EZ synchronous servo motor

To complete the type designation, also specify the following in your order:

- A detailed type designation of the motor, see the chapter [▷ 17.5]
- Mounting position, see the chapter [▷ 8.5.5]
- Position of the plug connectors, see the chapter [▷ 8.5.7]

To make selecting your geared motor easy, use our STOBER Configurator at https://configurator.stoeber.de/en-US/.

You can find a detailed description of the nameplate in the chapter [▷ 17.5.1].

8.5 Product description

8.5.1 Input options

EZ synchronous servo motor



Catalog ID 442437_en

MB motor adapter + EZ synchronous servo motor



Catalog ID 443311_en

LM Lean motor



Catalog ID 443016_en

Asynchronous motor

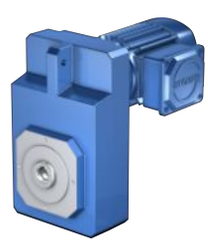

Catalog ID 443136_en

The corresponding catalogs can be found at http://www.stoeber.de/en/downloads/

Enter the ID of the catalog in the Search term field.

8.5.2 Housing design

Pitch circle diameter G	Round flange F
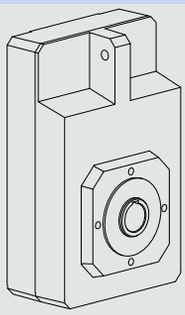	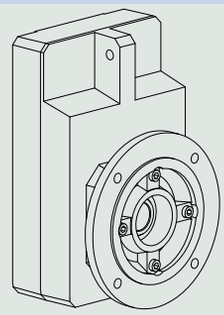

Square flange Q	Pitch circle diameter + side fastening GN
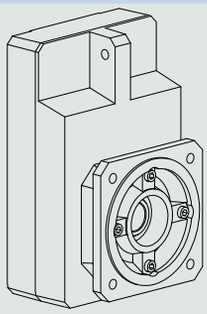	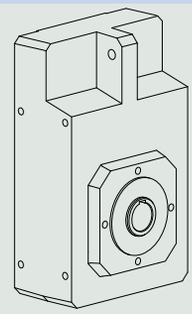

	G	F	Q	GN
F1	✓	✓	✓	✓
F2	✓	✓	✓	✓
F3	✓	✓	✓	✓
F4	✓	✓	✓	✓
F6	✓	✓	✓	✓

8.5.3 Combinatorial shaft/housing design

	Housing design				
Shaft design	**Code**	**G**	**F**	**Q**	**GN**
Hollow shaft with keyway	**A**	AG	AF	AQ	AGN
Hollow shaft with shrink ring	**S**	SG	SF	SQ	SGN
Solid shaft	**V**	–	VF	VQ	–

8.5.4 Installation conditions

Hollow shaft

The hollow shaft hole tolerance is ISO H7. The tolerance of the machine shaft must be ISO k6.

Take care to align the machine shaft with the gearbox hollow shaft when attaching the gearbox.

Maximum deviation ≤ 0.03 mm.

For simpler assembly and disassembly of the machine shaft, the hollow shafts are equipped with a spiral groove (as a grease deposit).

A hardened, threaded keeper plate is included in the scope of delivery. You also have the option to order the hollow shaft without a keeper plate.

Hollow shaft with shrink ring

The tolerance of the hollow shaft hole is ISO H7.

The machine shaft must be ISO h9.

Select a material for the machine shaft with a permitted surface pressure of $p \geq 325\ N/mm^2$.

Possible materials:

- C45E +QT
- 42CrMo4

Fastening the gearboxes on the machine side using the pitch circle diameter

The specified torques and forces only apply when gearboxes are fastened on the machine side using screws of strength class 10.9. In addition, the gear housings must be adjusted at the pilot. The machine-side fit must be H7.

8.5.5 Mounting positions

The following table shows the standard mounting positions.

The numbers identify the gearbox sides. The mounting position is defined by the gearbox side facing downwards.

EL1	EL2	EL3
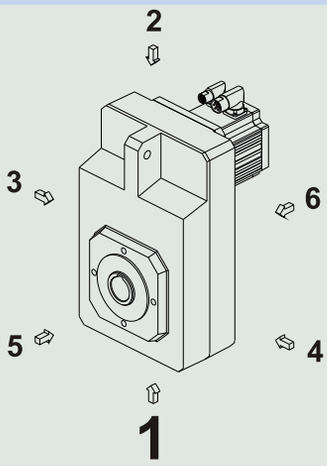	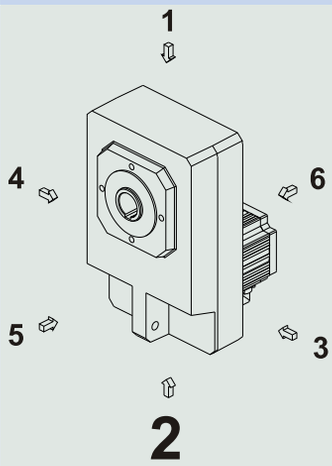	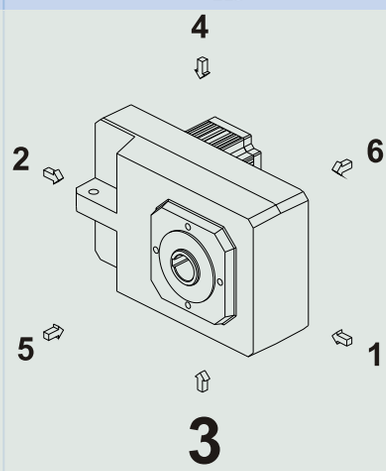
EL4	**EL5**	**EL6**
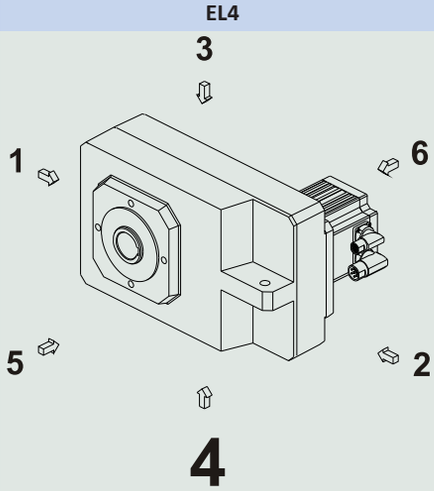	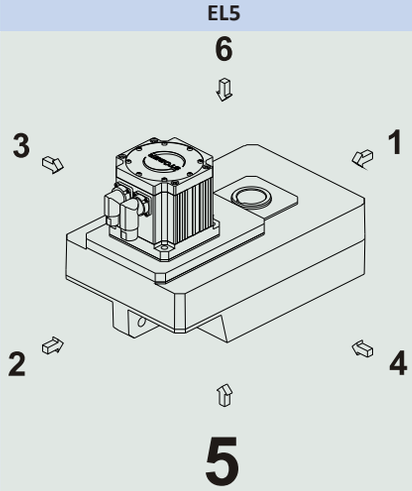	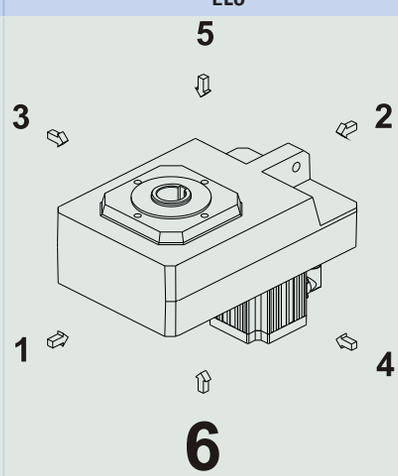

Since the lubricant filling volume of the gearbox depends on the mounting position, the mounting position must be specified when ordering.

8.5.6 Lubricants

STOBER fills the gearboxes with the amount and type of lubricant specified on the nameplate. The filling volume and the structure of the gearboxes depend on the mounting position.

Only install the gearboxes in the intended mounting position! Reposition the gearboxes only after consulting STOBER. Otherwise, STOBER assumes no liability for the gearboxes.

You will receive lubricants for use in the food industry upon request.

8.5.7 Position of the plug connectors

Mounting position EL1 Plug connector in 270° position (standard)	Mounting position EL4 Plug connector in 270° position (standard)
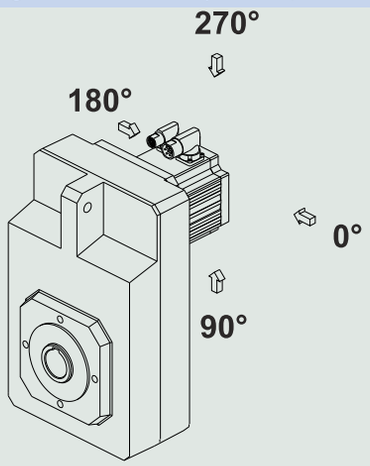	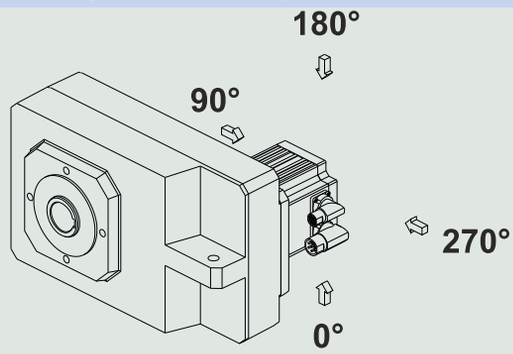

Indicate variations for your geared motor in the order.

Note that the plug connector position rotates along with the geared motor if the geared motor is in another mounting position.

8.5.8 Other product features

Feature	Value
Max. permitted gearbox temperature (on the surface of the gearbox)	≤ 80 °C
Paint	Black RAL 9005
Explosion-proof design in accordance with (ATEX) Directive 2014/34/EU (optional)	Not available
Efficiency:	
η_{get} two-stage	97%
η_{get} three-stage	96%
Protection class:[1]	
Gearbox	IP65
Motor	IP56, optionally IP66

8.5.9 Direction of rotation

Solid shaft (V), hollow shaft with keyway (A), hollow shaft with shrink ring (S)

F102 – F602	F203 – F603
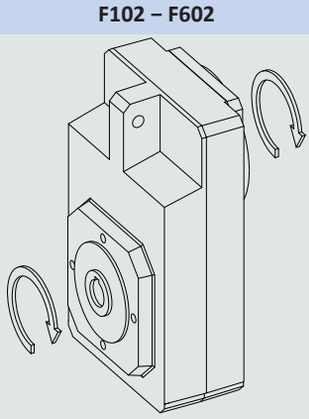	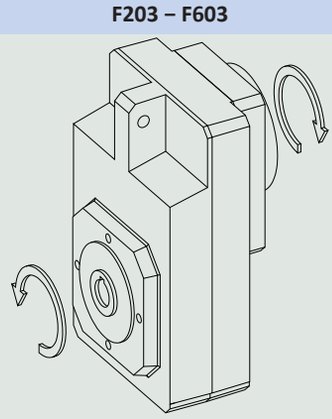
The input and output rotate in the same direction.	The input and output rotate in opposite directions.

The pictures show mounting position EL1.

[1] Observe the protection class of all the components.

8.6 Project configuration

Project your drives using our SERVOsoft designing software. Download SERVOsoft free of charge after registration at https://www.stoeber.de/en/services/info-servosoft/.

It is the most convenient and reliable method of drive selection, as the entire torque/speed curve of the application is displayed and evaluated here in the curve of the geared motor.

In this chapter, only limit values for specific operating points can be taken into consideration for manual drive selection.

An explanation of the formula symbols can be found in Chapter [▷ 20.1].

The formula symbols for values actually present in the application are marked with *.

8.6.1 Drive selection

Drive selection for gearboxes

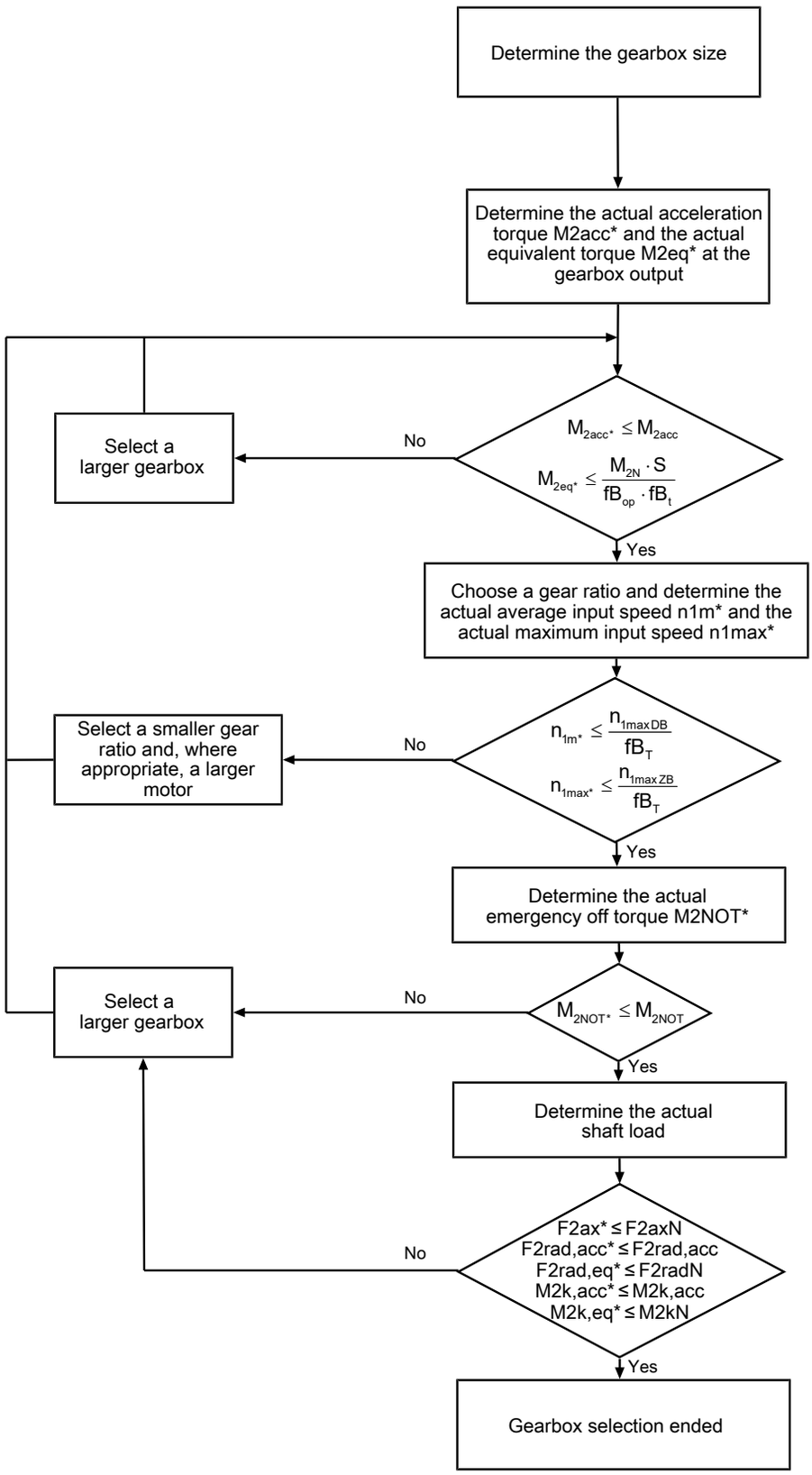

Calculate the forces and tilting torques in the chapter Permitted shaft loads.

Refer to the selection tables for the values for i, n_{1maxDB}, n_{1maxZB}, M_{2acc}, M_{2NOT}, M_{2N} and S.

The values for fB_T, fB_{op} and fB_t can be found in the corresponding tables in this chapter.

Drive selection for motors

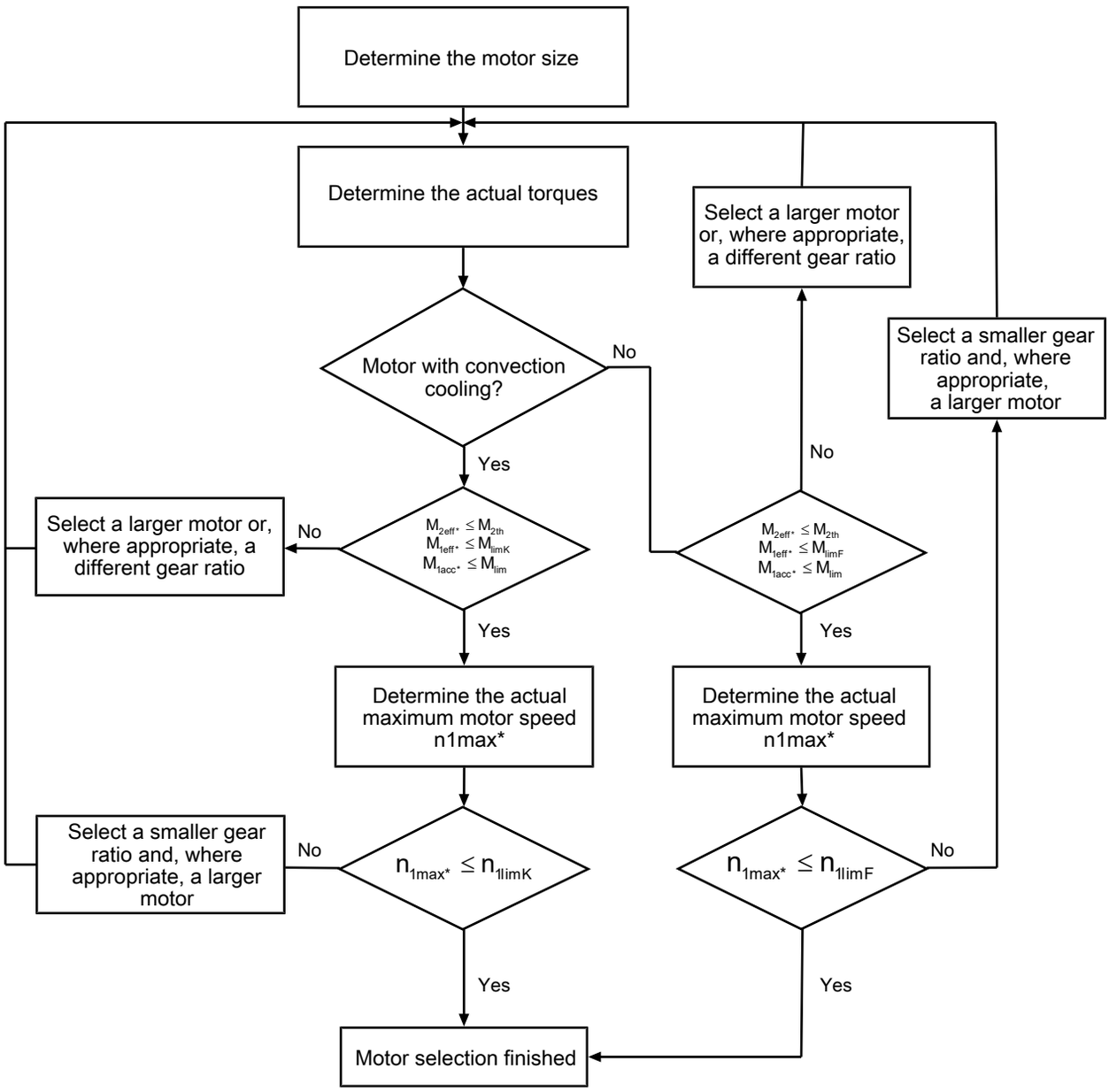

The value for M_{lim}, M_{limK}, M_{limF}, n_{1limK} and n_{1limF} can be found in the motor characteristic curve in the chapter [▷ 17.3]. Note the size, nominal speed n_N and cooling type of the motor.

Example of cyclic operation

The following calculations are based on a representation of the power taken from the output based in accordance with the following example:

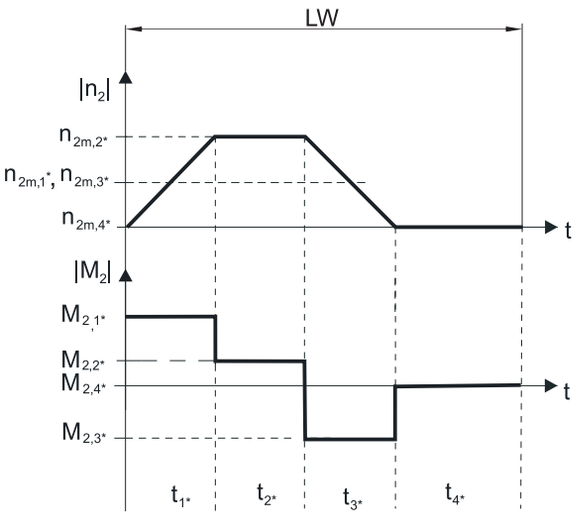

Calculation of the actual maximum acceleration torques

$$M_{2acc*} = J_{tot} \cdot \frac{\Delta n_2}{9{,}55 \cdot \Delta t} + M_{L*}$$

$$M_{1acc*} = \frac{M_{2acc*}}{i \cdot \eta_{get}} + J_1 \cdot \frac{\Delta n_1}{9{,}55 \cdot \Delta t}$$

Calculation of the actual average input speed

$$n_{1m*} = n_{2m*} \cdot i$$

$$n_{2m*} = \frac{\left|n_{2m,1*}\right| \cdot t_{1*} + \ldots + \left|n_{2m,n*}\right| \cdot t_{n*}}{t_{1*} + \ldots + t_{n*}}$$

If $t_{1*} + \ldots + t_{3*} \geq 6$ min, calculate n_{2m*} without the rest phase t_{4*}.

The values for the ratio i can be found in the selection tables.

Calculation of the actual effective torque

$$M_{2eff*} = \sqrt{\frac{t_{1*} \cdot M_{2,1*}{}^2 + \ldots + t_{n*} \cdot M_{2,n*}{}^2}{t_{1*} + \ldots + t_{n*}}}$$

Calculation of the actual emergency off torque

$$M_{2NOT*} = J_{tot} \cdot \frac{\Delta n_2}{9.55 \cdot \Delta t} + M_{L*}$$

Calculation of the actual equivalent torque

$$M_{2eq*} = \sqrt[3]{\frac{\left|n_{2m,1*}\right| \cdot t_{1*} \cdot \left|M_{2,1*}{}^3\right| + \ldots + \left|n_{2m,n*}\right| \cdot t_{n*} \cdot \left|M_{2,n*}{}^3\right|}{\left|n_{2m,1*}\right| \cdot t_{1*} + \ldots + \left|n_{2m,n*}\right| \cdot t_{n*}}}$$

Calculation of the thermal limit torque

Calculate the thermal limit torque M_{2th} for a duty cycle $ED_{10} > 50\%$ and the actual average input speed n_{1m*}. (At $K_{mot,th} \leq 0$ you must reduce the average input speed n_{1m*} accordingly or select another geared motor size.)

$$M_{2th} = M_{op} \cdot i \cdot K_{mot,th}$$

$$K_{mot,th} = 0{,}95 - \frac{a_{th}}{1000} \cdot athEL \cdot fB_T \cdot \left(\frac{n_{1m*}}{1000}\right)^3$$

The values for i and a_{th} can be found in the selection tables.

The values for a_{thEL} and fB_T can be found in the corresponding tables in this chapter.

The value for the torque of the motor at operating point M_{op} with the determined average input speed n_{1m*} can be found in the motor characteristic curve in the chapter [▶ 17.3]. Note the size, nominal speed n_N and cooling type of the motor. The figure below shows an example of reading the torque M_{op} of a motor with convection cooling at the operating point.

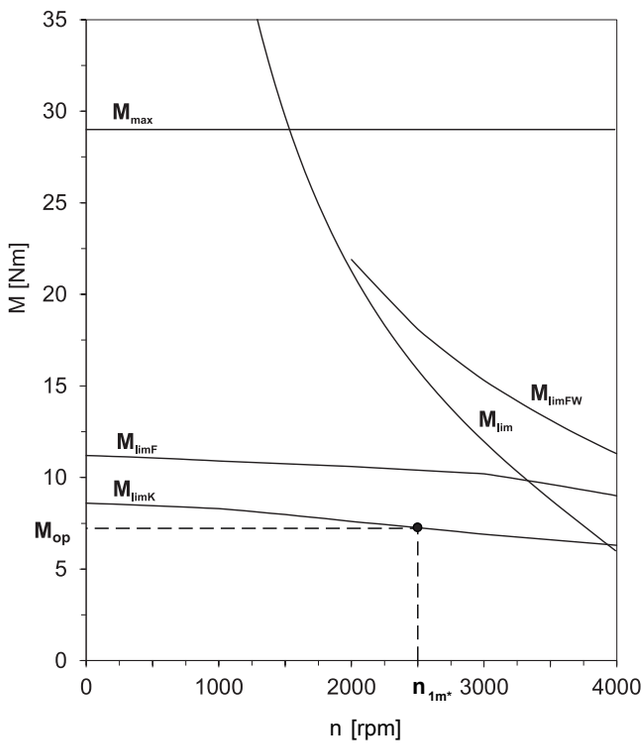

Operating factors

Parameter a_{thEL}

Mounting position	a_{thEL}
EL1, 2, 5, 6	1.0
EL3, 4	1.1

Operating mode	fB_{op}
Uniform continuous operation	1.00
Cyclic operation	1.25
Reversing load cyclic operation	1.40

Run time	fB_t
Daily runtime ≤ 8 h	1.00
Daily runtime ≤ 16 h	1.15
Daily runtime ≤ 24 h	1.20

Temperature		fB_T
Motor cooling	**Surrounding temperature**	
Motor with forced ventilation	≤ 20 °C	0.9
	≤ 30 °C	1.0
	≤ 40 °C	1.15
Motor with convection cooling	≤ 20 °C	1.0
	≤ 30 °C	1.1
	≤ 40 °C	1.25

Notes

- The maximum permitted gearbox temperature (see the "Other product features" chapter) must not be exceeded. Doing so may result in damage to the geared motor.
- For braking from full speed (for example when the power fails or when setting up the machine), note the permitted gearbox torques (M_{2acc}, M_{2NOT}) in the selection tables.

8.6.2 Permitted shaft loads for the output shaft

The values specified in the tables apply to the permitted shaft loads:

- For shaft dimensions in accordance with the catalog
- For output speeds $n_{2m*} \leq 20$ rpm ($F_{2axN} = F_{2ax20}$; $F_{2radN} = F_{2rad20}$; $M_{2kN} = M_{2k20}$)
- Only if radial forces on the gearbox are stabilized by its pilots for the pitch circle diameter and flange housing design

8.6.2.1 V shaft design

Permitted shaft loads for V shaft design (solid shaft)

Type	z_2 [mm]	F_{2ax20} [N]	F_{2rad20} [N]	$F_{2rad,acc}$ [N]	M_{2k20} [Nm]	$M_{2k,acc}$ [Nm]
F1	35.0	1100	4200	4200	260	260
F2	41.0	1400	5400	5400	400	400
F3	43.0	1900	7500	7500	600	600
F4	44.0	2350	9250	9250	800	800
F6	44.0	3100	12500	12500	1200	1200

For other output speeds, download diagrams at https://configurator.stoeber.de/en-US/.

The following applies to output speeds $n_{2m*} > 20$ rpm:

$$F_{2axN} = \frac{F_{2ax20}}{\sqrt[3]{\frac{n_{2m*}}{20\ \text{rpm}}}} \qquad F_{2radN} = \frac{F_{2rad20}}{\sqrt[3]{\frac{n_{2m*}}{20\ \text{rpm}}}} \qquad M_{2kN} = \frac{M_{2k20}}{\sqrt[3]{\frac{n_{2m*}}{20\ \text{rpm}}}}$$

The values for F_{2ax20}, F_{2rad20} and M_{2k20} can be found in the table "Permitted shaft loads" in this chapter.

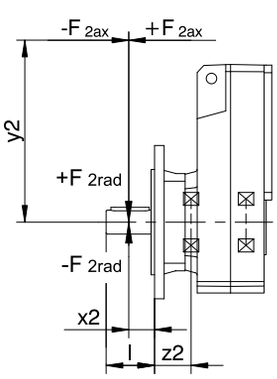

Fig. 1: Force application points for solid shaft

The specified values for F_{2rad20} and $F_{2rad,acc}$ refer to an application of force at the center of the output shaft: $x_2 = l/2$.

Shaft dimensions can be found in the "Dimensional drawings" chapter.

The following applies to other force application points:

$$M_{2k,acc*} = \frac{2 \cdot F_{2ax*} \cdot y_2 + F_{2rad,acc*} \cdot (x_2 + z_2)}{1000}$$

For applications with multiple axial and/or radial forces, you must add the forces as vectors.

In the event of EMERGENCY OFF operation (max. 1000 load changes), you can multiply the permitted forces and torques for F_{2ax20}, F_{2rad20} and M_{2k20} by a factor of two.

Also note the calculation for equivalent values:

$$M_{2k,eq*} = \sqrt[3]{\frac{|n_{2m,1*}| \cdot t_{1*} \cdot |M_{2k,acc,1*}{}^3| + \ldots + |n_{2m,n*}| \cdot t_{n*} \cdot |M_{2k,acc,n*}{}^3|}{|n_{2m,1*}| \cdot t_{1*} + \ldots + |n_{2m,n*}| \cdot t_{n*}}}$$

$$F_{2rad,eq*} = \sqrt[3]{\frac{|n_{2m,1*}| \cdot t_{1*} \cdot |F_{2rad,acc,1*}{}^3| + \ldots + |n_{2m,n*}| \cdot t_{n*} \cdot |F_{2rad,acc,n*}{}^3|}{|n_{2m,1*}| \cdot t_{1*} + \ldots + |n_{2m,n*}| \cdot t_{n*}}}$$

8.6.2.2 A and S shaft design

Permitted shaft loads for A shaft design (hollow shaft with keyway)

Type	z_2 [mm]	F_{2ax20} [N]	F_{2rad20} [N]	$F_{2rad,acc}$ [N]	M_{2k20} [Nm]	$M_{2k,acc}$ [Nm]
F1	30.0	900	4200	4200	175	175
F2	33.0	1200	5400	5400	250	250
F3	33.0	1350	7500	7500	375	375
F4	39.0	1900	9250	9250	550	550
F6	45.0	2200	12500	12500	800	800

Permitted shaft loads for S shaft design (hollow shaft with shrink ring)

Type	z_2 [mm]	F_{2ax20} [N]	F_{2rad20} [N]	$F_{2rad,acc}$ [N]	M_{2k20} [Nm]	$M_{2k,acc}$ [Nm]
F1	30.0	900	4200	4200	175	175
F2	33.0	1200	5400	5400	250	250
F3	33.0	1350	7500	7500	375	375
F4	39.0	1900	9250	9250	550	550
F6	45.0	2200	12500	12500	800	800

For other output speeds, download diagrams at https://configurator.stoeber.de/en-US/.

The following applies to output speeds n_{2m*} > 20 rpm:

$$F_{2axN} = \frac{F_{2ax20}}{\sqrt[3]{\frac{n_{2m*}}{20\ rpm}}} \qquad F_{2radN} = \frac{F_{2rad20}}{\sqrt[3]{\frac{n_{2m*}}{20\ rpm}}} \qquad M_{2kN} = \frac{M_{2k20}}{\sqrt[3]{\frac{n_{2m*}}{20\ rpm}}}$$

The values for F_{2ax20}, F_{2rad20} and M_{2k20} can be found in the table "Permitted shaft loads" in this chapter.

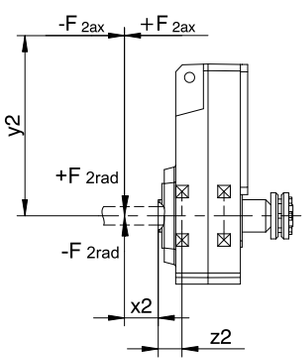

Fig. 2: Force application points for hollow shaft

You can determine the permitted radial forces from the permitted tilting torque M_{2kN} and $M_{2k,acc}$. The actual radial forces may not exceed the permitted radial forces. The permitted radial forces pertain to the shaft end (x2 = 0).

$$M_{2k,acc^*} = \frac{2 \cdot F_{2ax^*} \cdot y_2 + F_{2rad,acc^*} \cdot (x_2 + z_2)}{1000}$$

For applications with multiple axial and/or radial forces, you must add the forces as vectors.

In the event of EMERGENCY OFF operation (max. 1000 load changes), you can multiply the permitted forces and torques for F_{2ax20}, F_{2rad20} and M_{2k20} by a factor of two.

Also note the calculation for equivalent values:

$$M_{2k,eq^*} = \sqrt[3]{\frac{|n_{2m,1^*}| \cdot t_{1^*} \cdot |M_{2k,acc,1^*}{}^3| + \ldots + |n_{2m,n^*}| \cdot t_{n^*} \cdot |M_{2k,acc,n^*}{}^3|}{|n_{2m,1^*}| \cdot t_{1^*} + \ldots + |n_{2m,n^*}| \cdot t_{n^*}}}$$

$$F_{2rad,eq^*} = \sqrt[3]{\frac{|n_{2m,1^*}| \cdot t_{1^*} \cdot |F_{2rad,acc,1^*}{}^3| + \ldots + |n_{2m,n^*}| \cdot t_{n^*} \cdot |F_{2rad,acc,n^*}{}^3|}{|n_{2m,1^*}| \cdot t_{1^*} + \ldots + |n_{2m,n^*}| \cdot t_{n^*}}}$$

8.6.3 Radial shaft seal rings

Leak-proofness

Our gearboxes are equipped with high-quality radial shaft seal rings and checked for leaks. However, a leak cannot be fully ruled out over the length of use of a gearbox. If you use a gearbox with goods incompatible with the lubricant, you must take measures to prevent direct contact with the gearbox lubricant in case of a leak.

8.7 Additional documentation

Additional documentation related to the product can be found at
http://www.stoeber.de/en/downloads/

Enter the ID of the documentation in the Search term field.

Documentation	ID
Operating manual gearboxes, geared motors F	443366_en

9 KS right-angle servo geared motors

Table of contents

9.1 Overview 234

9.2 Selection tables 235

9.3 Dimensional drawings 243

9.3.1 F shaft design (flange hollow shaft) 244

9.3.2 S shaft design (hollow shaft with shrink disk) 246

9.3.3 G shaft design (solid shaft without feather key) 248

9.3.4 P shaft design (solid shaft with feather key) 250

9.4 Type designation 252

9.5 Product description 252

9.5.1 Input options 252

9.5.2 Installation conditions 253

9.5.3 Mounting positions 253

9.5.4 Lubricants 254

9.5.5 Position of the plug connectors 254

9.5.6 Other product features 254

9.5.7 Direction of rotation 254

9.6 Project configuration 255

9.6.1 Drive selection 256

9.6.2 Permitted shaft loads for the output shaft 260

9.6.3 Recommendation for radial shaft seal rings 263

9.7 Additional documentation 263

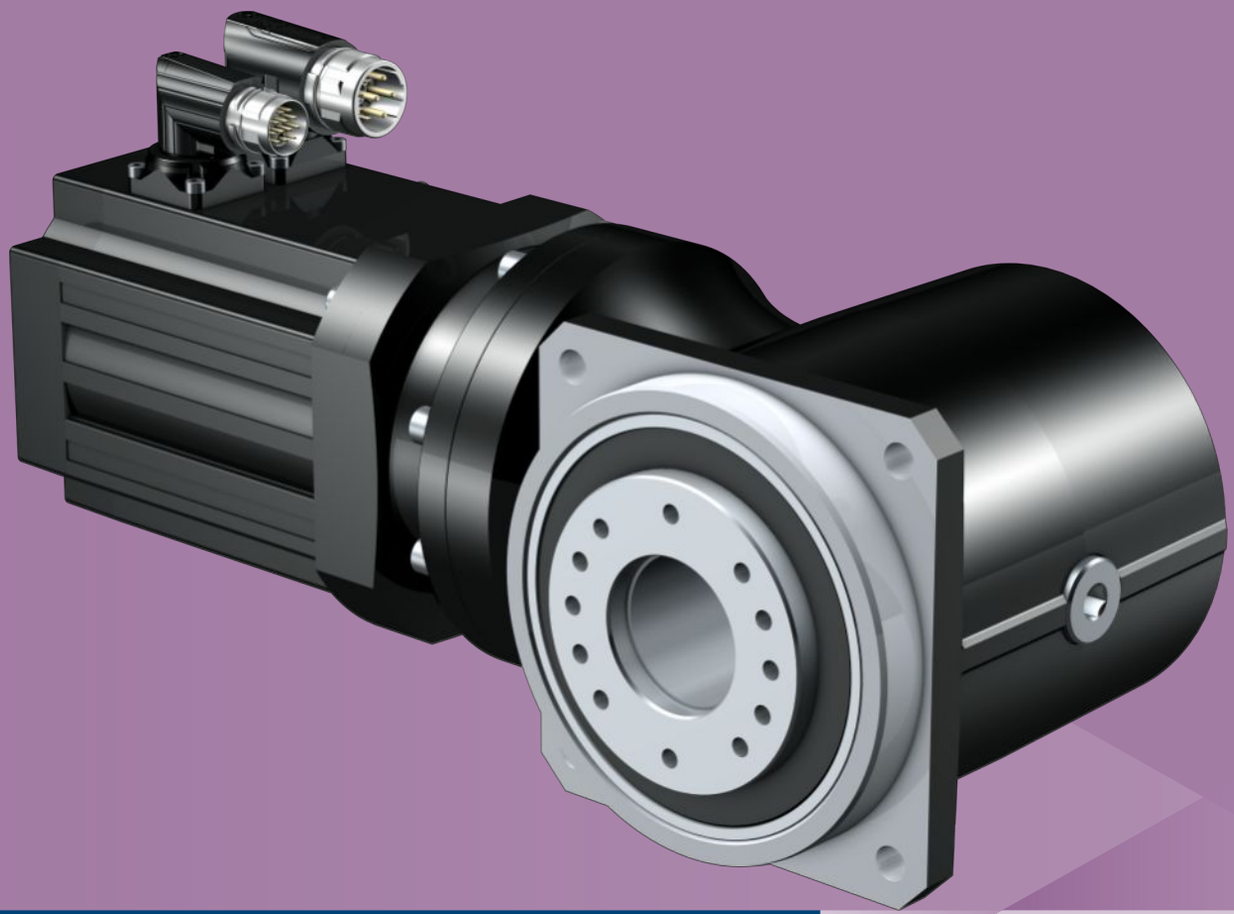

9

Right-angle servo geared motors

KS

9.1 Overview

Precision right-angle servo geared motors

Features

Power density	★★★☆☆
Backlash	★★★☆☆
Price category	€€€
Shaft load	★★★★★
Smooth operation	★★★★☆
Torsional stiffness	★★★☆☆
Mass moment of inertia	★★★★★
Helical gearing	✓
Maintenance-free	✓
FKM seal ring at the input	✓
Stiff output bearings due to pretension	✓
Compact and highly dynamic due to direct motor attachment	✓

Key ★☆☆☆☆ good | ★★★★★ excellent
€ Economy | €€€€€ Premium

Technical data

i	2 – 100
M_{2acc}	9.7 – 400 Nm
$\Delta\phi_2$	3 – 7 arcmin
η_{get}	93 – 97 %

9.2 Selection tables

The technical data specified in the selection tables applies to:

- Hollow shaft design with shrink ring (S)
- Installation altitudes up to 1000 m above sea level
- Surrounding temperatures from 0 °C to 40 °C
- Drives with convection-cooled motors (e.g. EZ401**U**)

For the technical data on drives with forced ventilated motors (e.g. EZ401**B**) as well as all other technical data, refer to
https://configurator.stoeber.de/en-US/

An explanation of the formula symbols can be found in Chapter [▷ 20.1].

n_{2N} [rpm]	M_{2N} [Nm]	$M_{2,0}$ [Nm]	a_{th}	S	Type	M_{2acc} [Nm]	M_{2NOT} [Nm]	i	i_{exakt}	n_{1maxDB} [rpm]	n_{1maxZB} [rpm]	J_1 [kgcm²]	$\Delta\varphi_{2red}$ [arcmin]	C_2 [Nm/ arcmin]	m [kg]
KS3 (n_{1N} = 3000 min^{-1}, $M_{2acc,max}$ = 45 Nm)															
150	18	18	1.4	1.2	KS312_0200 EZ301U	41	70	20.00	20/1	6000	8000	0.20	7.0	2.6	5.1
188	14	14	7.2	1.7	KS312_0160 EZ301U	32	64	16.00	16/1	6000	8000	0.25	7.0	3.6	5.1
214	12	13	2.0	1.8	KS312_0140 EZ301U	37	70	14.00	14/1	6000	8000	0.22	7.0	2.7	5.1
214	21	22	3.4	1.1	KS312_0140 EZ302U	45	70	14.00	14/1	6000	8000	0.32	7.0	2.7	5.7
300	8.8	9.0	2.7	2.7	KS312_0100 EZ301U	27	70	10.00	10/1	6000	8000	0.24	7.0	2.8	5.1
300	15	16	4.7	1.6	KS312_0100 EZ302U	45	70	10.00	10/1	6000	8000	0.34	7.0	2.8	5.7
300	20	21	6.1	1.2	KS312_0100 EZ303U	45	70	10.00	10/1	6000	8000	0.45	7.0	2.8	6.2
375	7.1	7.2	3.6	3.4	KS312_0080 EZ301U	21	70	8.000	8/1	6000	8000	0.27	7.0	2.8	5.1
375	12	13	6.1	2.0	KS312_0080 EZ302U	38	70	8.000	8/1	6000	8000	0.37	7.0	2.8	5.7
375	16	17	8.0	1.5	KS312_0080 EZ303U	45	70	8.000	8/1	6000	8000	0.48	7.0	2.8	6.2
750	6.2	6.5	86	3.0	KS311_0040 MF EZ302U	19	64	4.000	4/1	4000	6000	0.96	6.0	3.0	6.0
750	8.0	8.5	112	2.3	KS311_0040 MF EZ303U	27	64	4.000	4/1	4000	6000	1.1	6.0	3.0	6.5
750	11	12	152	1.7	KS311_0040 MF EZ401U	32	64	4.000	4/1	4000	6000	1.6	6.0	3.0	7.9
750	18	20	255	1.0	KS311_0040 MF EZ402U	32	64	4.000	4/1	4000	6000	2.3	6.0	3.0	9.0
1500	4.0	4.2	56	4.5	KS311_0020 MF EZ303U	14	40	2.000	2/1	3200	6000	1.5	6.0	2.3	6.5
1500	5.4	5.8	76	3.4	KS311_0020 MF EZ401U	16	40	2.000	2/1	3200	6000	2.0	6.0	2.3	7.9
1500	9.1	10	128	2.0	KS311_0020 MF EZ402U	31	40	2.000	2/1	3200	6000	2.7	6.0	2.3	9.0
1500	13	17	187	1.4	KS311_0020 MF EZ404U	32	40	2.000	2/1	3200	6000	4.1	6.0	2.3	11
KS3 (n_{1N} = 6000 min^{-1}, $M_{2acc,max}$ = 45 Nm)															
120	19	20	0.2	1.1	KS313_0500 EZ202U	45	70	50.00	50/1	6000	8000	0.15	7.0	2.8	5.5
150	15	17	1.3	1.2	KS312_0400 EZ202U	32	64	40.00	40/1	6000	8000	0.14	7.0	3.3	5.0
188	12	13	0.4	1.6	KS313_0320 EZ202U	44	70	32.00	32/1	6000	8000	0.16	7.0	2.8	5.5
188	18	21	0.6	1.0	KS313_0320 EZ203U	45	70	32.00	32/1	6000	8000	0.20	7.0	2.8	5.8
214	11	12	2.0	1.8	KS312_0280 EZ202U	32	64	28.00	28/1	6000	8000	0.14	7.0	3.4	5.0
214	16	18	3.0	1.2	KS312_0280 EZ203U	32	64	28.00	28/1	6000	8000	0.18	7.0	3.4	5.3
300	7.6	8.4	0.7	2.2	KS312_0200 EZ202U	28	70	20.00	20/1	6000	8000	0.14	7.0	2.6	5.0
300	12	13	1.1	1.4	KS312_0200 EZ203U	41	70	20.00	20/1	6000	8000	0.18	7.0	2.6	5.3
375	6.1	6.7	3.9	3.1	KS312_0160 EZ202U	22	64	16.00	16/1	6000	8000	0.18	7.0	3.6	5.0
375	9.3	10	5.9	2.0	KS312_0160 EZ203U	32	64	16.00	16/1	6000	8000	0.22	7.0	3.6	5.3
375	14	14	8.7	1.4	KS312_0160 EZ301U	32	64	16.00	16/1	6000	8000	0.25	7.0	3.6	5.1
429	5.3	5.9	1.1	3.3	KS312_0140 EZ202U	20	70	14.00	14/1	6000	8000	0.15	7.0	2.7	5.0
429	8.1	9.2	1.6	2.2	KS312_0140 EZ203U	36	70	14.00	14/1	6000	8000	0.19	7.0	2.7	5.3
429	12	13	2.4	1.5	KS312_0140 EZ301U	37	70	14.00	14/1	6000	8000	0.22	7.0	2.7	5.1
600	3.8	4.2	1.5	5.0	KS312_0100 EZ202U	14	70	10.00	10/1	6000	8000	0.18	7.0	2.8	5.0
600	5.8	6.6	2.3	3.3	KS312_0100 EZ203U	26	70	10.00	10/1	6000	8000	0.22	7.0	2.8	5.3
600	8.5	9.0	3.3	2.2	KS312_0100 EZ301U	27	70	10.00	10/1	6000	8000	0.24	7.0	2.8	5.1
600	14	16	5.6	1.3	KS312_0100 EZ302U	45	70	10.00	10/1	6000	8000	0.34	7.0	2.8	5.7
600	19	21	7.3	1.0	KS312_0100 EZ303U	45	70	10.00	10/1	6000	8000	0.45	7.0	2.8	6.2
750	4.6	5.2	3.0	4.1	KS312_0080 EZ203U	21	70	8.000	8/1	6000	8000	0.25	7.0	2.8	5.3
750	6.8	7.2	4.3	2.8	KS312_0080 EZ301U	21	70	8.000	8/1	6000	8000	0.27	7.0	2.8	5.1
750	11	13	7.3	1.7	KS312_0080 EZ302U	38	70	8.000	8/1	6000	8000	0.37	7.0	2.8	5.7
750	15	17	9.5	1.3	KS312_0080 EZ303U	45	70	8.000	8/1	6000	8000	0.48	7.0	2.8	6.2
1500	3.5	3.7	61	4.2	KS311_0040 MF EZ301U	11	64	4.000	4/1	4000	6000	0.86	6.0	3.0	5.4
1500	5.8	6.5	103	2.5	KS311_0040 MF EZ302U	19	64	4.000	4/1	4000	6000	0.96	6.0	3.0	6.0
1500	7.6	8.7	134	1.9	KS311_0040 MF EZ303U	27	64	4.000	4/1	4000	6000	1.1	6.0	3.0	6.5
1500	8.9	11	157	1.6	KS311_0040 MF EZ401U	32	64	4.000	4/1	4000	6000	1.6	6.0	3.0	7.9
1500	14	19	239	1.1	KS311_0040 MF EZ402U	32	64	4.000	4/1	4000	6000	2.3	6.0	3.0	9.0
3000	2.9	3.3	51	5.0	KS311_0020 MF EZ302U	9.7	40	2.000	2/1	3200	6000	1.4	6.0	2.3	6.0
3000	3.8	4.4	67	3.8	KS311_0020 MF EZ303U	14	40	2.000	2/1	3200	6000	1.5	6.0	2.3	6.5
3000	4.5	5.4	79	3.2	KS311_0020 MF EZ401U	16	40	2.000	2/1	3200	6000	2.0	6.0	2.3	7.9

n_{2N} [rpm]	M_{2N} [Nm]	$M_{2,0}$ [Nm]	a_{th}	S	Type	M_{2acc} [Nm]	M_{2NOT} [Nm]	i	i_{exakt}	n_{1maxDB} [rpm]	n_{1maxZB} [rpm]	J_1 [kgcm²]	$\Delta\varphi_{2red}$ [arcmin]	C_2 [Nm/ arcmin]	m [kg]
KS3 (n_{1N} = 6000 min^{-1}, $M_{2acc,max}$ = 45 Nm)															
3000	6.8	9.5	120	2.1	KS311_0020 MF EZ402U	31	40	2.000	2/1	3200	6000	2.7	6.0	2.3	9.0
3000	11	16	198	1.3	KS311_0020 MF EZ404U	32	40	2.000	2/1	3200	6000	4.1	6.0	2.3	11
KS4 (n_{1N} = 3000 min^{-1}, $M_{2acc,max}$ = 90 Nm)															
60	43	44	0.2	1.4	KS413_0500 EZ301U	90	140	50.00	50/1	4500	6000	0.22	6.0	7.3	9.6
75	35	36	1.3	1.5	KS412_0400 EZ301U	65	140	40.00	40/1	5000	6000	0.22	6.0	9.5	9.1
94	28	28	0.3	2.2	KS413_0320 EZ301U	83	140	32.00	32/1	4000	6000	0.24	6.0	7.4	9.6
94	47	50	0.6	1.3	KS413_0320 EZ302U	90	140	32.00	32/1	4000	6000	0.34	6.0	7.4	10
107	25	25	2.1	2.1	KS412_0280 EZ301U	65	140	28.00	28/1	4500	6000	0.24	6.0	9.6	9.1
107	42	45	3.5	1.2	KS412_0280 EZ302U	65	140	28.00	28/1	4500	6000	0.34	6.0	9.6	9.7
150	18	18	0.7	2.9	KS412_0200 EZ301U	53	140	20.00	20/1	5000	6000	0.23	6.0	7.0	9.1
150	30	32	1.2	1.7	KS412_0200 EZ302U	90	140	20.00	20/1	5000	6000	0.33	6.0	7.0	9.7
150	39	42	1.5	1.3	KS412_0200 EZ303U	90	140	20.00	20/1	5000	6000	0.44	6.0	7.0	10
188	14	14	4.0	3.7	KS412_0160 EZ301U	43	140	16.00	16/1	4000	6000	0.35	6.0	10	9.1
188	24	26	6.9	2.1	KS412_0160 EZ302U	65	140	16.00	16/1	4000	6000	0.45	6.0	10	9.7
188	31	33	9.0	1.6	KS412_0160 EZ303U	65	140	16.00	16/1	4000	6000	0.56	6.0	10	10
188	43	46	12	1.2	KS412_0160 EZ401U	65	140	16.00	16/1	4000	6000	1.1	6.0	10	12
214	12	13	1.0	4.2	KS412_0140 EZ301U	37	140	14.00	14/1	4500	6000	0.28	6.0	7.1	9.1
214	21	22	1.8	2.4	KS412_0140 EZ302U	67	140	14.00	14/1	4500	6000	0.38	6.0	7.1	9.7
214	28	29	2.3	1.9	KS412_0140 EZ303U	90	140	14.00	14/1	4500	6000	0.49	6.0	7.1	10
214	37	40	3.1	1.4	KS412_0140 EZ401U	90	140	14.00	14/1	4500	6000	1.0	6.0	7.1	12
250	11	11	5.7	4.9	KS412_0120 EZ301U	32	140	12.00	12/1	4000	6000	0.51	6.0	10	9.1
250	18	19	9.8	2.8	KS412_0120 EZ302U	57	140	12.00	12/1	4000	6000	0.61	6.0	10	9.7
250	24	25	13	2.2	KS412_0120 EZ303U	65	140	12.00	12/1	4000	6000	0.72	6.0	10	10
250	32	34	17	1.6	KS412_0120 EZ401U	65	140	12.00	12/1	4000	6000	1.2	6.0	10	12
300	15	16	2.6	3.4	KS412_0100 EZ302U	48	140	10.00	10/1	4500	6000	0.46	6.0	7.3	9.7
300	20	21	3.4	2.6	KS412_0100 EZ303U	67	140	10.00	10/1	4500	6000	0.57	6.0	7.3	10
300	27	29	4.7	1.9	KS412_0100 EZ401U	81	140	10.00	10/1	4500	6000	1.1	6.0	7.3	12
300	45	49	7.8	1.2	KS412_0100 EZ402U	90	140	10.00	10/1	4500	6000	1.8	6.0	7.3	13
375	12	13	3.5	4.3	KS412_0080 EZ302U	38	140	8.000	8/1	4000	6000	0.56	6.0	7.4	9.7
375	16	17	4.5	3.3	KS412_0080 EZ303U	53	140	8.000	8/1	4000	6000	0.67	6.0	7.4	10
375	21	23	6.1	2.4	KS412_0080 EZ401U	65	140	8.000	8/1	4000	6000	1.2	6.0	7.4	12
375	36	40	10	1.4	KS412_0080 EZ402U	90	140	8.000	8/1	4000	6000	1.9	6.0	7.4	13
500	12	12	6.9	4.0	KS412_0060 EZ303U	40	140	6.000	6/1	3500	6000	0.91	6.0	7.5	10
500	16	17	9.3	3.0	KS412_0060 EZ401U	48	140	6.000	6/1	3500	6000	1.4	6.0	7.5	12
500	27	30	16	1.8	KS412_0060 EZ402U	90	140	6.000	6/1	3500	6000	2.1	6.0	7.5	13
750	11	12	85	3.7	KS411_0040 MF EZ401U	33	130	4.000	4/1	3500	6000	2.9	5.0	7.2	12
750	17	18	131	2.4	KS411_0040 MF EZ501U	62	130	4.000	4/1	3500	6000	4.9	5.0	7.2	13
750	18	20	143	2.2	KS411_0040 MF EZ402U	62	130	4.000	4/1	3500	6000	3.6	5.0	7.2	13
750	27	33	210	1.5	KS411_0040 MF EZ404U	65	130	4.000	4/1	3500	6000	5.0	5.0	7.2	15
750	29	31	225	1.4	KS411_0040 MF EZ502U	65	130	4.000	4/1	3500	6000	7.2	5.0	7.2	14
750	38	43	296	1.1	KS411_0040 MF EZ503U	65	130	4.000	4/1	3500	6000	9.6	5.0	7.2	16
1500	8.3	9.1	65	4.8	KS411_0020 MF EZ501U	31	100	2.000	2/1	2500	5000	6.6	5.0	5.2	13
1500	9.1	10	72	4.4	KS411_0020 MF EZ402U	31	100	2.000	2/1	2500	5000	5.4	5.0	5.2	13
1500	13	17	105	3.0	KS411_0020 MF EZ404U	56	100	2.000	2/1	2500	5000	6.7	5.0	5.2	15
1500	14	16	113	2.8	KS411_0020 MF EZ502U	60	100	2.000	2/1	2500	5000	8.9	5.0	5.2	14
1500	19	22	148	2.1	KS411_0020 MF EZ503U	80	100	2.000	2/1	2500	5000	11	5.0	5.2	16
1500	26	31	206	1.5	KS411_0020 MF EZ505U	80	100	2.000	2/1	2500	5000	16	5.0	5.2	19
KS4 (n_{1N} = 6000 min^{-1}, $M_{2acc,max}$ = 90 Nm)															
60	37	41	–	1.3	KS413_1000 EZ202U	90	140	100.0	100/1	5000	6000	0.13	6.0	7.3	9.6
75	30	33	0.1	1.6	KS413_0800 EZ202U	90	140	80.00	80/1	5000	6000	0.13	6.0	9.9	9.6
75	45	51	0.1	1.0	KS413_0800 EZ203U	90	140	80.00	80/1	5000	6000	0.17	6.0	9.9	9.8
86	26	29	0.1	1.8	KS413_0700 EZ202U	90	140	70.00	70/1	4500	6000	0.14	6.0	7.3	9.6
86	40	45	0.1	1.2	KS413_0700 EZ203U	90	140	70.00	70/1	4500	6000	0.18	6.0	7.3	9.8
94	24	26	0.4	1.7	KS413_0640 EZ202U	65	140	64.00	64/1	4000	6000	0.17	6.0	10	9.6
94	36	41	0.6	1.1	KS413_0640 EZ203U	65	140	64.00	64/1	4000	6000	0.21	6.0	10	9.8
120	19	20	0.1	2.5	KS413_0500 EZ202U	69	140	50.00	50/1	4500	6000	0.15	6.0	7.3	9.6
120	28	32	0.2	1.7	KS413_0500 EZ203U	90	140	50.00	50/1	4500	6000	0.19	6.0	7.3	9.8
120	41	44	0.2	1.1	KS413_0500 EZ301U	90	140	50.00	50/1	4500	6000	0.22	6.0	7.3	9.6
150	34	36	1.6	1.2	KS412_0400 EZ301U	65	140	40.00	40/1	5000	6000	0.22	6.0	9.5	9.1
188	12	13	0.2	4.0	KS413_0320 EZ202U	44	140	32.00	32/1	4000	6000	0.18	6.0	7.4	9.6
188	18	21	0.3	2.6	KS413_0320 EZ203U	80	140	32.00	32/1	4000	6000	0.22	6.0	7.4	9.8
188	26	28	0.4	1.8	KS413_0320 EZ301U	83	140	32.00	32/1	4000	6000	0.24	6.0	7.4	9.6
188	45	50	0.7	1.1	KS413_0320 EZ302U	90	140	32.00	32/1	4000	6000	0.34	6.0	7.4	10
214	24	25	2.5	1.7	KS412_0280 EZ301U	65	140	28.00	28/1	4500	6000	0.24	6.0	9.6	9.1
214	40	45	4.2	1.0	KS412_0280 EZ302U	65	140	28.00	28/1	4500	6000	0.34	6.0	9.6	9.7

n_{2N} [rpm]	M_{2N} [Nm]	$M_{2,0}$ [Nm]	a_{th}	S	Type	M_{2acc} [Nm]	M_{2NOT} [Nm]	i	i_{exakt}	n_{1maxDB} [rpm]	n_{1maxZB} [rpm]	J_1 [kgcm²]	$\Delta\varphi_{2red}$ [arcmin]	C_2 [Nm/ arcmin]	m [kg]
KS4 (n_{1N} = 6000 min^{-1}, $M_{2acc,max}$ = 90 Nm)															
300	17	18	0.8	2.4	KS412_0200 EZ301U	53	140	20.00	20/1	5000	6000	0.23	6.0	7.0	9.1
300	29	32	1.4	1.4	KS412_0200 EZ302U	90	140	20.00	20/1	5000	6000	0.33	6.0	7.0	9.7
300	37	43	1.8	1.1	KS412_0200 EZ303U	90	140	20.00	20/1	5000	6000	0.44	6.0	7.0	10
375	14	14	4.9	3.0	KS412_0160 EZ301U	43	140	16.00	16/1	4000	6000	0.35	6.0	10	9.1
375	23	26	8.2	1.8	KS412_0160 EZ302U	65	140	16.00	16/1	4000	6000	0.45	6.0	10	9.7
375	30	34	11	1.4	KS412_0160 EZ303U	65	140	16.00	16/1	4000	6000	0.56	6.0	10	10
375	35	43	13	1.2	KS412_0160 EZ401U	65	140	16.00	16/1	4000	6000	1.1	6.0	10	12
429	12	13	1.2	3.5	KS412_0140 EZ301U	37	140	14.00	14/1	4500	6000	0.28	6.0	7.1	9.1
429	20	22	2.1	2.1	KS412_0140 EZ302U	67	140	14.00	14/1	4500	6000	0.38	6.0	7.1	9.7
429	26	30	2.7	1.6	KS412_0140 EZ303U	90	140	14.00	14/1	4500	6000	0.49	6.0	7.1	10
429	31	37	3.2	1.3	KS412_0140 EZ401U	90	140	14.00	14/1	4500	6000	1.0	6.0	7.1	12
500	10	11	6.9	4.0	KS412_0120 EZ301U	32	140	12.00	12/1	4000	6000	0.51	6.0	10	9.1
500	17	19	12	2.4	KS412_0120 EZ302U	57	140	12.00	12/1	4000	6000	0.61	6.0	10	9.7
500	22	26	15	1.8	KS412_0120 EZ303U	65	140	12.00	12/1	4000	6000	0.72	6.0	10	10
500	26	32	18	1.6	KS412_0120 EZ401U	65	140	12.00	12/1	4000	6000	1.2	6.0	10	12
500	40	56	27	1.0	KS412_0120 EZ402U	65	140	12.00	12/1	4000	6000	1.9	6.0	10	13
600	8.5	9.0	1.9	4.8	KS412_0100 EZ301U	27	140	10.00	10/1	4500	6000	0.36	6.0	7.3	9.1
600	14	16	3.1	2.9	KS412_0100 EZ302U	48	140	10.00	10/1	4500	6000	0.46	6.0	7.3	9.7
600	19	21	4.1	2.2	KS412_0100 EZ303U	67	140	10.00	10/1	4500	6000	0.57	6.0	7.3	10
600	22	27	4.8	1.9	KS412_0100 EZ401U	81	140	10.00	10/1	4500	6000	1.1	6.0	7.3	12
600	33	47	7.3	1.2	KS412_0100 EZ402U	90	140	10.00	10/1	4500	6000	1.8	6.0	7.3	13
750	11	13	4.1	3.6	KS412_0080 EZ302U	38	140	8.000	8/1	4000	6000	0.56	6.0	7.4	9.7
750	15	17	5.4	2.7	KS412_0080 EZ303U	53	140	8.000	8/1	4000	6000	0.67	6.0	7.4	10
750	17	21	6.3	2.3	KS412_0080 EZ401U	65	140	8.000	8/1	4000	6000	1.2	6.0	7.4	12
750	27	37	9.6	1.5	KS412_0080 EZ402U	90	140	8.000	8/1	4000	6000	1.9	6.0	7.4	13
1000	8.6	9.6	6.3	4.4	KS412_0060 EZ302U	29	140	6.000	6/1	3500	6000	0.80	6.0	7.5	9.7
1000	11	13	8.2	3.4	KS412_0060 EZ303U	40	140	6.000	6/1	3500	6000	0.91	6.0	7.5	10
1000	13	16	9.6	2.9	KS412_0060 EZ401U	48	140	6.000	6/1	3500	6000	1.4	6.0	7.5	12
1000	20	28	15	1.9	KS412_0060 EZ402U	90	140	6.000	6/1	3500	6000	2.1	6.0	7.5	13
1500	8.9	11	88	3.5	KS411_0040 MF EZ401U	33	130	4.000	4/1	3500	6000	2.9	5.0	7.2	12
1500	13	17	130	2.4	KS411_0040 MF EZ501U	62	130	4.000	4/1	3500	6000	4.9	5.0	7.2	13
1500	14	19	134	2.3	KS411_0040 MF EZ402U	62	130	4.000	4/1	3500	6000	3.6	5.0	7.2	13
1500	20	30	200	1.6	KS411_0040 MF EZ502U	65	130	4.000	4/1	3500	6000	7.2	5.0	7.2	14
1500	23	33	223	1.4	KS411_0040 MF EZ404U	65	130	4.000	4/1	3500	6000	5.0	5.0	7.2	15
1500	24	41	238	1.3	KS411_0040 MF EZ503U	65	130	4.000	4/1	3500	6000	9.6	5.0	7.2	16
KS5 (n_{1N} = 3000 min^{-1}, $M_{2acc,max}$ = 200 Nm)															
30	86	88	–	1.4	KS513_1000 EZ301U	200	300	100.0	100/1	4200	6000	0.21	5.0	17	16
38	69	71	0.1	1.7	KS513_0800 EZ301U	200	300	80.00	80/1	4200	6000	0.21	5.0	18	16
38	118	125	0.1	1.0	KS513_0800 EZ302U	200	300	80.00	80/1	4200	6000	0.31	5.0	18	17
43	61	62	0.1	2.0	KS513_0700 EZ301U	182	300	70.00	70/1	4200	6000	0.23	5.0	17	16
43	104	109	0.1	1.2	KS513_0700 EZ302U	200	300	70.00	70/1	4200	6000	0.33	5.0	17	17
47	55	57	0.5	1.8	KS513_0640 EZ301U	140	280	64.00	64/1	3300	6000	0.32	5.0	17	16
47	95	100	0.8	1.0	KS513_0640 EZ302U	140	280	64.00	64/1	3300	6000	0.42	5.0	17	17
60	43	44	0.1	2.8	KS513_0500 EZ301U	130	300	50.00	50/1	3500	6000	0.27	5.0	17	16
60	74	78	0.2	1.6	KS513_0500 EZ302U	200	300	50.00	50/1	3500	6000	0.37	5.0	17	17
60	96	102	0.3	1.2	KS513_0500 EZ303U	200	300	50.00	50/1	3500	6000	0.48	5.0	17	17
94	28	28	0.2	4.3	KS513_0320 EZ301U	83	300	32.00	32/1	3500	6000	0.34	5.0	18	16
94	47	50	0.3	2.5	KS513_0320 EZ302U	149	300	32.00	32/1	3500	6000	0.44	5.0	18	17
94	62	65	0.4	1.9	KS513_0320 EZ303U	200	300	32.00	32/1	3500	6000	0.55	5.0	18	17
94	83	89	0.6	1.4	KS513_0320 EZ401U	200	300	32.00	32/1	3500	6000	1.1	5.0	18	19
107	74	80	3.8	1.3	KS512_0280 EZ401U	140	280	28.00	28/1	3700	6000	1.1	5.0	15	18
150	53	57	1.2	1.9	KS512_0200 EZ401U	162	300	20.00	20/1	3700	6000	1.1	5.0	16	18
150	82	89	1.9	1.2	KS512_0200 EZ501U	200	300	20.00	20/1	3700	6000	3.0	5.0	16	19
150	89	99	2.1	1.1	KS512_0200 EZ402U	200	300	20.00	20/1	3700	6000	1.8	5.0	16	19
188	43	46	7.5	2.3	KS512_0160 EZ401U	129	280	16.00	16/1	3300	6000	1.4	5.0	17	18
188	65	71	11	1.5	KS512_0160 EZ501U	140	280	16.00	16/1	3300	6000	3.4	5.0	17	19
188	71	79	13	1.4	KS512_0160 EZ402U	140	280	16.00	16/1	3300	6000	2.1	5.0	17	19
214	37	40	1.9	2.7	KS512_0140 EZ401U	113	300	14.00	14/1	3700	6000	1.2	5.0	17	18
214	57	63	2.9	1.7	KS512_0140 EZ501U	200	300	14.00	14/1	3700	6000	3.2	5.0	17	19
214	63	69	3.2	1.6	KS512_0140 EZ402U	200	300	14.00	14/1	3700	6000	1.9	5.0	17	19
214	92	114	4.7	1.1	KS512_0140 EZ404U	200	300	14.00	14/1	3700	6000	3.2	5.0	17	21
214	98	106	5.0	1.0	KS512_0140 EZ502U	200	300	14.00	14/1	3700	6000	5.5	5.0	17	20
250	32	34	11	3.1	KS512_0120 EZ401U	97	280	12.00	12/1	2500	5500	1.9	5.0	17	18
250	49	54	16	2.0	KS512_0120 EZ501U	140	280	12.00	12/1	2500	5500	3.9	5.0	17	19
250	54	59	18	1.9	KS512_0120 EZ402U	140	280	12.00	12/1	2500	5500	2.6	5.0	17	19

n_{2N} [rpm]	M_{2N} [Nm]	$M_{2,0}$ [Nm]	a_{th}	S	Type	M_{2acc} [Nm]	M_{2NOT} [Nm]	i	i_{exakt}	n_{1maxDB} [rpm]	n_{1maxZB} [rpm]	J_1 [kgcm²]	$\Delta\varphi_{2red}$ [arcmin]	C_2 [Nm/ arcmin]	m [kg]
KS5 (n_{1N} = 3000 min^{-1}, $M_{2acc,max}$ = 200 Nm)															
250	79	98	26	1.3	KS512_0120 EZ404U	140	280	12.00	12/1	2500	5500	4.0	5.0	17	21
250	84	91	28	1.2	KS512_0120 EZ502U	140	280	12.00	12/1	2500	5500	6.2	5.0	17	20
300	27	29	2.9	3.7	KS512_0100 EZ401U	81	300	10.00	10/1	3500	6000	1.4	5.0	17	18
300	41	45	4.4	2.4	KS512_0100 EZ501U	152	300	10.00	10/1	3500	6000	3.4	5.0	17	19
300	45	49	4.8	2.2	KS512_0100 EZ402U	152	300	10.00	10/1	3500	6000	2.1	5.0	17	19
300	66	82	7.0	1.5	KS512_0100 EZ404U	200	300	10.00	10/1	3500	6000	3.5	5.0	17	21
300	70	76	7.6	1.4	KS512_0100 EZ502U	200	300	10.00	10/1	3500	6000	5.7	5.0	17	20
300	92	105	9.9	1.1	KS512_0100 EZ503U	200	300	10.00	10/1	3500	6000	8.1	5.0	17	22
375	21	23	3.7	4.7	KS512_0080 EZ401U	65	300	8.000	8/1	3300	6000	1.7	5.0	18	18
375	33	36	5.7	3.0	KS512_0080 EZ501U	122	300	8.000	8/1	3300	6000	3.7	5.0	18	19
375	36	40	6.3	2.8	KS512_0080 EZ402U	122	300	8.000	8/1	3300	6000	2.4	5.0	18	19
375	52	65	9.2	1.9	KS512_0080 EZ404U	200	300	8.000	8/1	3300	6000	3.8	5.0	18	21
375	56	61	9.9	1.8	KS512_0080 EZ502U	200	300	8.000	8/1	3300	6000	6.0	5.0	18	20
375	74	84	13	1.3	KS512_0080 EZ503U	200	300	8.000	8/1	3300	6000	8.4	5.0	18	22
500	16	17	6.6	5.0	KS512_0060 EZ401U	48	300	6.000	6/1	2500	5500	2.5	5.0	19	18
500	25	27	10	3.2	KS512_0060 EZ501U	91	300	6.000	6/1	2500	5500	4.4	5.0	19	19
500	27	30	11	3.0	KS512_0060 EZ402U	91	300	6.000	6/1	2500	5500	3.2	5.0	19	19
500	39	49	16	2.0	KS512_0060 EZ404U	165	300	6.000	6/1	2500	5500	4.5	5.0	19	21
500	42	46	17	1.9	KS512_0060 EZ502U	177	300	6.000	6/1	2500	5500	6.7	5.0	19	20
500	55	63	23	1.4	KS512_0060 EZ503U	200	300	6.000	6/1	2500	5500	9.1	5.0	19	22
500	77	91	32	1.0	KS512_0060 EZ505U	200	300	6.000	6/1	2500	5500	14	5.0	19	25
750	17	18	77	4.8	KS511_0040 MF EZ501U	62	280	4.000	4/1	2500	6000	9.5	4.0	19	19
750	29	31	133	2.8	KS511_0040 MF EZ502U	120	280	4.000	4/1	2500	6000	12	4.0	19	20
750	29	32	133	2.8	KS511_0040 MF EZ701U	78	280	4.000	4/1	2500	6000	15	4.0	19	22
750	38	43	174	2.1	KS511_0040 MF EZ503U	140	280	4.000	4/1	2500	6000	14	4.0	19	22
750	47	56	216	1.7	KS511_0040 MF EZ702U	140	280	4.000	4/1	2500	6000	20	4.0	19	25
750	52	62	243	1.5	KS511_0040 MF EZ505U	140	280	4.000	4/1	2500	6000	19	4.0	19	25
750	64	81	296	1.2	KS511_0040 MF EZ703U	140	280	4.000	4/1	2500	6000	28	4.0	19	27
1500	19	22	87	4.2	KS511_0020 MF EZ503U	83	225	2.000	2/1	2000	4600	19	4.0	21	22
1500	23	28	108	3.4	KS511_0020 MF EZ702U	80	225	2.000	2/1	2000	4600	25	4.0	21	25
1500	26	31	121	3.0	KS511_0020 MF EZ505U	130	225	2.000	2/1	2000	4600	24	4.0	21	25
1500	32	40	148	2.5	KS511_0020 MF EZ703U	126	225	2.000	2/1	2000	4600	33	4.0	21	27
1500	41	59	191	1.9	KS511_0020 MF EZ705U	180	225	2.000	2/1	2000	4600	45	4.0	21	32
KS5 (n_{1N} = 4500 min^{-1}, $M_{2acc,max}$ = 200 Nm)															
563	72	116	15	1.2	KS512_0080 EZ505U	200	300	8.000	8/1	3300	6000	13	5.0	18	25
750	54	87	26	1.3	KS512_0060 EZ505U	200	300	6.000	6/1	2500	5500	14	5.0	19	25
1125	37	59	195	1.9	KS511_0040 MF EZ505U	140	280	4.000	4/1	2500	6000	19	4.0	19	25
1125	47	78	249	1.5	KS511_0040 MF EZ703U	140	280	4.000	4/1	2500	6000	28	4.0	19	27
1125	64	116	337	1.1	KS511_0040 MF EZ705U	140	280	4.000	4/1	2500	6000	41	4.0	19	32
2250	18	30	98	3.8	KS511_0020 MF EZ505U	130	225	2.000	2/1	2000	4600	24	4.0	21	25
2250	23	39	124	3.0	KS511_0020 MF EZ703U	126	225	2.000	2/1	2000	4600	33	4.0	21	27
2250	32	58	169	2.2	KS511_0020 MF EZ705U	180	225	2.000	2/1	2000	4600	45	4.0	21	32
KS5 (n_{1N} = 6000 min^{-1}, $M_{2acc,max}$ = 200 Nm)															
60	83	88	0.1	1.1	KS513_1000 EZ301U	200	300	100.0	100/1	4200	6000	0.21	5.0	17	16
75	66	71	0.1	1.4	KS513_0800 EZ301U	200	300	80.00	80/1	4200	6000	0.21	5.0	18	16
86	58	62	0.1	1.6	KS513_0700 EZ301U	182	300	70.00	70/1	4200	6000	0.23	5.0	17	16
94	53	57	0.6	1.5	KS513_0640 EZ301U	140	280	64.00	64/1	3300	6000	0.32	5.0	17	16
120	41	44	0.1	2.3	KS513_0500 EZ301U	130	300	50.00	50/1	3500	6000	0.27	5.0	17	16
120	70	78	0.2	1.4	KS513_0500 EZ302U	200	300	50.00	50/1	3500	6000	0.37	5.0	17	17
120	91	105	0.3	1.0	KS513_0500 EZ303U	200	300	50.00	50/1	3500	6000	0.48	5.0	17	17
188	26	28	0.2	3.6	KS513_0320 EZ301U	83	300	32.00	32/1	3500	6000	0.34	5.0	18	16
188	45	50	0.4	2.1	KS513_0320 EZ302U	149	300	32.00	32/1	3500	6000	0.44	5.0	18	17
188	58	67	0.5	1.6	KS513_0320 EZ303U	200	300	32.00	32/1	3500	6000	0.55	5.0	18	17
188	68	83	0.6	1.4	KS513_0320 EZ401U	200	300	32.00	32/1	3500	6000	1.1	5.0	18	19
214	61	74	3.9	1.3	KS512_0280 EZ401U	140	280	28.00	28/1	3700	6000	1.1	5.0	15	18
300	44	53	1.3	1.8	KS512_0200 EZ401U	162	300	20.00	20/1	3700	6000	1.1	5.0	16	18
300	65	84	1.9	1.2	KS512_0200 EZ501U	200	300	20.00	20/1	3700	6000	3.0	5.0	16	19
300	67	93	2.0	1.2	KS512_0200 EZ402U	200	300	20.00	20/1	3700	6000	1.8	5.0	16	19
375	35	43	7.7	2.3	KS512_0160 EZ401U	129	280	16.00	16/1	3300	6000	1.4	5.0	17	18
375	52	67	11	1.5	KS512_0160 EZ501U	140	280	16.00	16/1	3300	6000	3.4	5.0	17	19
375	53	74	12	1.5	KS512_0160 EZ402U	140	280	16.00	16/1	3300	6000	2.1	5.0	17	19
429	31	37	2.0	2.6	KS512_0140 EZ401U	113	300	14.00	14/1	3700	6000	1.2	5.0	17	18
429	45	59	2.9	1.7	KS512_0140 EZ501U	200	300	14.00	14/1	3700	6000	3.2	5.0	17	19
429	47	65	3.0	1.7	KS512_0140 EZ402U	200	300	14.00	14/1	3700	6000	1.9	5.0	17	19
429	69	104	4.5	1.1	KS512_0140 EZ502U	200	300	14.00	14/1	3700	6000	5.5	5.0	17	20

n_{2N} [rpm]	M_{2N} [Nm]	$M_{2,0}$ [Nm]	a_{th}	S	Type	M_{2acc} [Nm]	M_{2NOT} [Nm]	i	i_{exakt}	n_{1maxDB} [rpm]	n_{1maxZB} [rpm]	J_1 [kgcm²]	$\Delta\varphi_{2red}$ [arcmin]	C_2 [Nm/ arcmin]	m [kg]
KS5 (n_{1N} = 6000 min^{-1}, $M_{2acc,max}$ = 200 Nm)															
429	77	112	5.0	1.0	KS512_0140 EZ404U	200	300	14.00	14/1	3700	6000	3.2	5.0	17	21
600	22	27	3.0	3.6	KS512_0100 EZ401U	81	300	10.00	10/1	3500	6000	1.4	5.0	17	18
600	32	42	4.4	2.4	KS512_0100 EZ501U	152	300	10.00	10/1	3500	6000	3.4	5.0	17	19
600	33	47	4.5	2.4	KS512_0100 EZ402U	152	300	10.00	10/1	3500	6000	2.1	5.0	17	19
600	49	74	6.7	1.6	KS512_0100 EZ502U	200	300	10.00	10/1	3500	6000	5.7	5.0	17	20
600	55	80	7.5	1.4	KS512_0100 EZ404U	200	300	10.00	10/1	3500	6000	3.5	5.0	17	21
600	59	101	8.0	1.3	KS512_0100 EZ503U	200	300	10.00	10/1	3500	6000	8.1	5.0	17	22
750	17	21	3.9	4.5	KS512_0080 EZ401U	65	300	8.000	8/1	3300	6000	1.7	5.0	18	18
750	26	33	5.7	3.0	KS512_0080 EZ501U	122	300	8.000	8/1	3300	6000	3.7	5.0	18	19
750	27	37	5.9	3.0	KS512_0080 EZ402U	122	300	8.000	8/1	3300	6000	2.4	5.0	18	19
750	40	59	8.7	2.0	KS512_0080 EZ502U	200	300	8.000	8/1	3300	6000	6.0	5.0	18	20
750	44	64	9.7	1.8	KS512_0080 EZ404U	200	300	8.000	8/1	3300	6000	3.8	5.0	18	21
750	47	81	10	1.7	KS512_0080 EZ503U	200	300	8.000	8/1	3300	6000	8.4	5.0	18	22
1500	13	17	77	4.8	KS511_0040 MF EZ501U	62	280	4.000	4/1	2500	6000	9.5	4.0	19	19
1500	20	30	118	3.1	KS511_0040 MF EZ502U	120	280	4.000	4/1	2500	6000	12	4.0	19	20
1500	20	31	118	3.1	KS511_0040 MF EZ701U	78	280	4.000	4/1	2500	6000	15	4.0	19	22
1500	24	41	140	2.6	KS511_0040 MF EZ503U	140	280	4.000	4/1	2500	6000	14	4.0	19	22
1500	28	55	163	2.3	KS511_0040 MF EZ702U	140	280	4.000	4/1	2500	6000	20	4.0	19	25
KS7 (n_{1N} = 2000 min^{-1}, $M_{2acc,max}$ = 320 Nm)															
500	151	170	849	1.2	KS711_0040 MF EZ813U	285	570	4.000	4/1	2200	4000	123	3.0	36	61
1000	76	85	425	2.4	KS711_0020 MF EZ813U	272	400	2.000	2/1	1600	3500	140	3.0	33	61
1000	112	133	629	1.6	KS711_0020 MF EZ815U	320	400	2.000	2/1	1600	3500	203	3.0	33	74
KS7 (n_{1N} = 3000 min^{-1}, $M_{2acc,max}$ = 400 Nm)															
38	208	223	0.1	1.1	KS713_0800 EZ401U	400	600	80.00	80/1	4000	6000	1.0	4.0	38	32
43	182	195	0.1	1.3	KS713_0700 EZ401U	400	600	70.00	70/1	3500	6000	1.1	4.0	38	32
47	167	179	0.9	1.2	KS713_0640 EZ401U	285	570	64.00	64/1	3000	6000	1.3	4.0	40	32
60	130	140	0.2	1.8	KS713_0500 EZ401U	395	600	50.00	50/1	3500	6000	1.2	4.0	38	32
60	200	219	0.3	1.2	KS713_0500 EZ501U	400	600	50.00	50/1	3500	6000	3.1	4.0	38	33
60	219	242	0.4	1.1	KS713_0500 EZ402U	400	600	50.00	50/1	3500	6000	1.9	4.0	38	33
75	163	179	5.3	1.2	KS712_0400 EZ501U	285	570	40.00	40/1	3300	6000	3.2	4.0	40	31
94	83	89	0.4	2.9	KS713_0320 EZ401U	253	600	32.00	32/1	3000	6000	1.4	4.0	38	32
94	128	140	0.6	1.9	KS713_0320 EZ501U	400	600	32.00	32/1	3000	6000	3.3	4.0	38	33
94	140	155	0.6	1.7	KS713_0320 EZ402U	400	600	32.00	32/1	3000	6000	2.1	4.0	38	33
94	205	256	0.9	1.2	KS713_0320 EZ404U	400	600	32.00	32/1	3000	6000	3.4	4.0	38	35
94	220	238	1.0	1.1	KS713_0320 EZ502U	400	600	32.00	32/1	3000	6000	5.6	4.0	38	35
107	114	125	8.1	1.7	KS712_0280 EZ501U	285	570	28.00	28/1	3300	6000	3.4	4.0	40	31
107	197	213	14	1.0	KS712_0280 EZ502U	285	570	28.00	28/1	3300	6000	5.7	4.0	40	33
107	197	221	14	1.0	KS712_0280 EZ701U	285	570	28.00	28/1	3300	6000	9.0	4.0	40	34
150	82	89	2.7	2.4	KS712_0200 EZ501U	304	600	20.00	20/1	3300	6000	3.3	4.0	38	31
150	141	152	4.6	1.4	KS712_0200 EZ502U	400	600	20.00	20/1	3300	6000	5.6	4.0	38	33
150	141	158	4.6	1.4	KS712_0200 EZ701U	380	600	20.00	20/1	3300	6000	8.9	4.0	38	34
150	184	211	6.0	1.1	KS712_0200 EZ503U	400	600	20.00	20/1	3300	6000	8.0	4.0	38	34
188	65	71	16	3.0	KS712_0160 EZ501U	243	570	16.00	16/1	3000	6000	4.4	4.0	40	31
188	112	122	27	1.8	KS712_0160 EZ502U	285	570	16.00	16/1	3000	6000	6.7	4.0	40	33
188	112	126	27	1.8	KS712_0160 EZ701U	285	570	16.00	16/1	3000	6000	10	4.0	40	34
188	147	169	36	1.3	KS712_0160 EZ503U	285	570	16.00	16/1	3000	6000	9.1	4.0	40	34
188	182	219	44	1.1	KS712_0160 EZ702U	285	570	16.00	16/1	3000	6000	15	4.0	40	37
214	57	63	4.1	3.5	KS712_0140 EZ501U	213	600	14.00	14/1	3200	6000	3.8	4.0	38	31
214	98	106	7.0	2.0	KS712_0140 EZ502U	400	600	14.00	14/1	3200	6000	6.1	4.0	38	33
214	98	110	7.0	2.0	KS712_0140 EZ701U	266	600	14.00	14/1	3200	6000	9.4	4.0	38	34
214	129	148	9.2	1.5	KS712_0140 EZ503U	400	600	14.00	14/1	3200	6000	8.4	4.0	38	34
214	160	192	11	1.2	KS712_0140 EZ702U	400	600	14.00	14/1	3200	6000	15	4.0	38	37
214	180	213	13	1.1	KS712_0140 EZ505U	400	600	14.00	14/1	3200	6000	13	4.0	38	37
250	49	54	22	4.0	KS712_0120 EZ501U	182	570	12.00	12/1	2200	5000	5.9	4.0	40	31
250	84	95	39	2.4	KS712_0120 EZ701U	228	570	12.00	12/1	2200	5000	11	4.0	40	34
250	84	91	39	2.4	KS712_0120 EZ502U	285	570	12.00	12/1	2200	5000	8.2	4.0	40	33
250	111	127	51	1.8	KS712_0120 EZ503U	285	570	12.00	12/1	2200	5000	11	4.0	40	34
250	137	164	63	1.5	KS712_0120 EZ702U	285	570	12.00	12/1	2200	5000	17	4.0	40	37
250	154	182	71	1.3	KS712_0120 EZ505U	285	570	12.00	12/1	2200	5000	15	4.0	40	37
250	188	237	86	1.1	KS712_0120 EZ703U	285	570	12.00	12/1	2200	5000	25	4.0	40	39
300	41	45	6.1	4.9	KS712_0100 EZ501U	152	600	10.00	10/1	3000	6000	4.6	4.0	38	31
300	70	76	10	2.8	KS712_0100 EZ502U	295	600	10.00	10/1	3000	6000	6.9	4.0	38	33
300	70	79	10	2.8	KS712_0100 EZ701U	190	600	10.00	10/1	3000	6000	10	4.0	38	34
300	92	105	14	2.2	KS712_0100 EZ503U	400	600	10.00	10/1	3000	6000	9.2	4.0	38	34
300	114	137	17	1.7	KS712_0100 EZ702U	390	600	10.00	10/1	3000	6000	15	4.0	38	37

n_{2N} [rpm]	M_{2N} [Nm]	$M_{2,0}$ [Nm]	a_{th}	S	Type	M_{2acc} [Nm]	M_{2NOT} [Nm]	i	i_{exakt}	n_{1maxDB} [rpm]	n_{1maxZB} [rpm]	J_1 [kgcm²]	$\Delta\varphi_{2red}$ [arcmin]	C_2 [Nm/ arcmin]	m [kg]
KS7 (n_{1N} = 3000 min^{-1}, $M_{2acc,max}$ = 400 Nm)															
300	128	152	19	1.5	KS712_0100 EZ505U	400	600	10.00	10/1	3000	6000	14	4.0	38	37
300	157	198	23	1.3	KS712_0100 EZ703U	400	600	10.00	10/1	3000	6000	23	4.0	38	39
375	56	61	14	3.5	KS712_0080 EZ502U	236	600	8.000	8/1	3000	6000	7.8	4.0	38	33
375	56	63	14	3.5	KS712_0080 EZ701U	152	600	8.000	8/1	3000	6000	11	4.0	38	34
375	74	84	18	2.7	KS712_0080 EZ503U	327	600	8.000	8/1	3000	6000	10	4.0	38	34
375	91	109	22	2.2	KS712_0080 EZ702U	312	600	8.000	8/1	3000	6000	16	4.0	38	37
375	103	122	25	1.9	KS712_0080 EZ505U	400	600	8.000	8/1	3000	6000	15	4.0	38	37
375	125	158	31	1.6	KS712_0080 EZ703U	400	600	8.000	8/1	3000	6000	24	4.0	38	39
375	162	230	39	1.2	KS712_0080 EZ705U	400	600	8.000	8/1	3000	6000	37	4.0	38	44
500	42	46	24	3.8	KS712_0060 EZ502U	177	600	6.000	6/1	2200	5000	10	4.0	38	33
500	42	47	24	3.8	KS712_0060 EZ701U	114	600	6.000	6/1	2200	5000	13	4.0	38	34
500	55	63	32	2.9	KS712_0060 EZ503U	245	600	6.000	6/1	2200	5000	13	4.0	38	34
500	68	82	39	2.3	KS712_0060 EZ702U	234	600	6.000	6/1	2200	5000	19	4.0	38	37
500	77	91	44	2.1	KS712_0060 EZ505U	382	600	6.000	6/1	2200	5000	17	4.0	38	37
500	94	119	54	1.7	KS712_0060 EZ703U	371	600	6.000	6/1	2200	5000	27	4.0	38	39
500	121	172	70	1.3	KS712_0060 EZ705U	400	600	6.000	6/1	2200	5000	39	4.0	38	44
750	47	56	299	3.4	KS711_0040 MF EZ702U	159	570	4.000	4/1	2200	4000	32	3.0	36	36
750	64	81	411	2.5	KS711_0040 MF EZ703U	252	570	4.000	4/1	2200	4000	40	3.0	36	38
750	83	117	531	1.9	KS711_0040 MF EZ705U	285	570	4.000	4/1	2200	4000	52	3.0	36	44
1500	32	40	206	5.0	KS711_0020 MF EZ703U	126	400	2.000	2/1	1600	3500	58	3.0	33	38
1500	41	59	265	3.8	KS711_0020 MF EZ705U	202	400	2.000	2/1	1600	3500	70	3.0	33	44
KS7 (n_{1N} = 4000 min^{-1}, $M_{2acc,max}$ = 290 Nm)															
1000	98	170	692	1.5	KS711_0040 MF EZ813U	285	570	4.000	4/1	2200	4000	123	3.0	36	61
1000	101	261	716	1.4	KS711_0040 MF EZ815U	285	570	4.000	4/1	2200	4000	186	3.0	36	74
KS7 (n_{1N} = 4500 min^{-1}, $M_{2acc,max}$ = 400 Nm)															
281	144	233	40	1.2	KS712_0160 EZ505U	285	570	16.00	16/1	3000	6000	14	4.0	40	37
321	126	203	10	1.4	KS712_0140 EZ505U	400	600	14.00	14/1	3200	6000	13	4.0	38	37
321	161	266	13	1.1	KS712_0140 EZ703U	400	600	14.00	14/1	3200	6000	22	4.0	38	39
375	108	174	57	1.6	KS712_0120 EZ505U	285	570	12.00	12/1	2200	5000	15	4.0	40	37
375	138	228	72	1.3	KS712_0120 EZ703U	285	570	12.00	12/1	2200	5000	25	4.0	40	39
450	90	145	15	1.9	KS712_0100 EZ505U	400	600	10.00	10/1	3000	6000	14	4.0	38	37
450	115	190	20	1.5	KS712_0100 EZ703U	400	600	10.00	10/1	3000	6000	23	4.0	38	39
450	156	285	27	1.1	KS712_0100 EZ705U	400	600	10.00	10/1	3000	6000	36	4.0	38	44
563	72	116	20	2.4	KS712_0080 EZ505U	400	600	8.000	8/1	3000	6000	15	4.0	38	37
563	92	152	26	1.9	KS712_0080 EZ703U	400	600	8.000	8/1	3000	6000	24	4.0	38	39
563	125	228	35	1.4	KS712_0080 EZ705U	400	600	8.000	8/1	3000	6000	37	4.0	38	44
750	54	87	36	2.6	KS712_0060 EZ505U	382	600	6.000	6/1	2200	5000	17	4.0	38	37
750	69	114	45	2.0	KS712_0060 EZ703U	371	600	6.000	6/1	2200	5000	27	4.0	38	39
750	93	171	61	1.5	KS712_0060 EZ705U	400	600	6.000	6/1	2200	5000	39	4.0	38	44
KS7 (n_{1N} = 6000 min^{-1}, $M_{2acc,max}$ = 400 Nm)															
75	171	208	0.1	1.1	KS713_0800 EZ401U	400	600	80.00	80/1	4000	6000	1.0	4.0	38	32
86	150	182	0.2	1.3	KS713_0700 EZ401U	400	600	70.00	70/1	3500	6000	1.1	4.0	38	32
94	137	167	0.9	1.2	KS713_0640 EZ401U	285	570	64.00	64/1	3000	6000	1.3	4.0	40	32
120	107	130	0.2	1.8	KS713_0500 EZ401U	395	600	50.00	50/1	3500	6000	1.2	4.0	38	32
120	158	205	0.3	1.2	KS713_0500 EZ501U	400	600	50.00	50/1	3500	6000	3.1	4.0	38	33
120	163	228	0.3	1.2	KS713_0500 EZ402U	400	600	50.00	50/1	3500	6000	1.9	4.0	38	33
150	129	167	5.3	1.2	KS712_0400 EZ501U	285	570	40.00	40/1	3300	6000	3.2	4.0	40	31
188	68	83	0.4	2.8	KS713_0320 EZ401U	253	600	32.00	32/1	3000	6000	1.4	4.0	38	32
188	101	131	0.6	1.9	KS713_0320 EZ501U	400	600	32.00	32/1	3000	6000	3.3	4.0	38	33
188	104	146	0.6	1.8	KS713_0320 EZ402U	400	600	32.00	32/1	3000	6000	2.1	4.0	38	33
188	155	232	0.9	1.2	KS713_0320 EZ502U	400	600	32.00	32/1	3000	6000	5.6	4.0	38	35
188	173	250	1.0	1.1	KS713_0320 EZ404U	400	600	32.00	32/1	3000	6000	3.4	4.0	38	35
188	185	315	1.1	1.0	KS713_0320 EZ503U	400	600	32.00	32/1	3000	6000	8.0	4.0	38	36
214	90	117	8.1	1.7	KS712_0280 EZ501U	285	570	28.00	28/1	3300	6000	3.4	4.0	40	31
214	138	210	12	1.1	KS712_0280 EZ701U	285	570	28.00	28/1	3300	6000	9.0	4.0	40	34
214	138	207	12	1.1	KS712_0280 EZ502U	285	570	28.00	28/1	3300	6000	5.7	4.0	40	33
300	65	84	2.6	2.4	KS712_0200 EZ501U	304	600	20.00	20/1	3300	6000	3.3	4.0	38	31
300	99	150	4.0	1.6	KS712_0200 EZ701U	380	600	20.00	20/1	3300	6000	8.9	4.0	38	34
300	99	148	4.0	1.6	KS712_0200 EZ502U	400	600	20.00	20/1	3300	6000	5.6	4.0	38	33
300	118	201	4.8	1.3	KS712_0200 EZ503U	400	600	20.00	20/1	3300	6000	8.0	4.0	38	34
300	137	272	5.6	1.2	KS712_0200 EZ702U	400	600	20.00	20/1	3300	6000	14	4.0	38	37
375	52	67	16	3.0	KS712_0160 EZ501U	243	570	16.00	16/1	3000	6000	4.4	4.0	40	31
375	79	120	24	2.0	KS712_0160 EZ701U	285	570	16.00	16/1	3000	6000	10	4.0	40	34
375	79	119	24	2.0	KS712_0160 EZ502U	285	570	16.00	16/1	3000	6000	6.7	4.0	40	33
375	94	161	29	1.7	KS712_0160 EZ503U	285	570	16.00	16/1	3000	6000	9.1	4.0	40	34

n_{2N} [rpm]	M_{2N} [Nm]	$M_{2,0}$ [Nm]	a_{th}	S	Type	M_{2acc} [Nm]	M_{2NOT} [Nm]	i	i_{exakt}	n_{1maxDB} [rpm]	n_{1maxZB} [rpm]	J_1 [kgcm²]	$\Delta\varphi_{2red}$ [arcmin]	C_2 [Nm/ arcmin]	m [kg]
KS7 (n_{1N} = 6000 min^{-1}, $M_{2acc,max}$ = 400 Nm)															
375	109	217	34	1.4	KS712_0160 EZ702U	285	570	16.00	16/1	3000	6000	15	4.0	40	37
429	45	59	4.1	3.5	KS712_0140 EZ501U	213	600	14.00	14/1	3200	6000	3.8	4.0	38	31
429	69	105	6.2	2.3	KS712_0140 EZ701U	266	600	14.00	14/1	3200	6000	9.4	4.0	38	34
429	69	104	6.2	2.3	KS712_0140 EZ502U	400	600	14.00	14/1	3200	6000	6.1	4.0	38	33
429	82	141	7.4	1.9	KS712_0140 EZ503U	400	600	14.00	14/1	3200	6000	8.4	4.0	38	34
429	96	190	8.6	1.6	KS712_0140 EZ702U	400	600	14.00	14/1	3200	6000	15	4.0	38	37
600	32	42	6.1	4.9	KS712_0100 EZ501U	152	600	10.00	10/1	3000	6000	4.6	4.0	38	31
600	49	75	9.3	3.2	KS712_0100 EZ701U	190	600	10.00	10/1	3000	6000	10	4.0	38	34
600	49	74	9.3	3.2	KS712_0100 EZ502U	295	600	10.00	10/1	3000	6000	6.9	4.0	38	33
600	59	101	11	2.7	KS712_0100 EZ503U	400	600	10.00	10/1	3000	6000	9.2	4.0	38	34
600	68	136	13	2.3	KS712_0100 EZ702U	390	600	10.00	10/1	3000	6000	15	4.0	38	37
750	40	60	12	4.0	KS712_0080 EZ701U	152	600	8.000	8/1	3000	6000	11	4.0	38	34
750	40	59	12	4.0	KS712_0080 EZ502U	236	600	8.000	8/1	3000	6000	7.8	4.0	38	33
750	47	81	14	3.3	KS712_0080 EZ503U	327	600	8.000	8/1	3000	6000	10	4.0	38	34
750	55	109	17	2.9	KS712_0080 EZ702U	312	600	8.000	8/1	3000	6000	16	4.0	38	37

9.3 Dimensional drawings

In this chapter you can find the dimensions of the geared motors.

There is a dimensional drawing for every possible shaft/housing design, each with the tables for gearbox dimensions, motor dimensions and geared motor dimensions.

Dimensions can exceed the specifications of ISO 2768-mK due to casting tolerances or accumulation of individual tolerances.

We reserve the right to make dimensional changes due to ongoing technical development.

You can download 3D models of our standard drives at https://configurator.stoeber.de/en-US/.

Combination options and the dimensions of forced ventilated geared motors can also be found at https://configurator.stoeber.de/en-US/.

Tolerances

Solid shaft	Tolerance
Shaft ∅ fit ≤ 50 mm	DIN 748-1, ISO k6
Shaft ∅ fit > 50 mm	DIN 748-1, ISO m6
Feather keys	DIN 6885-1, high form A

Hollow shaft	Tolerance
Hollow shaft hole fit	ISO H7
Feather keys	DIN 6885-1, high form

Centering holes in solid shafts in accordance with DIN 332-2, DR shape

Thread size	M8	M12	M16
Thread depth	19	28	36

9.3.1 F shaft design (flange hollow shaft)

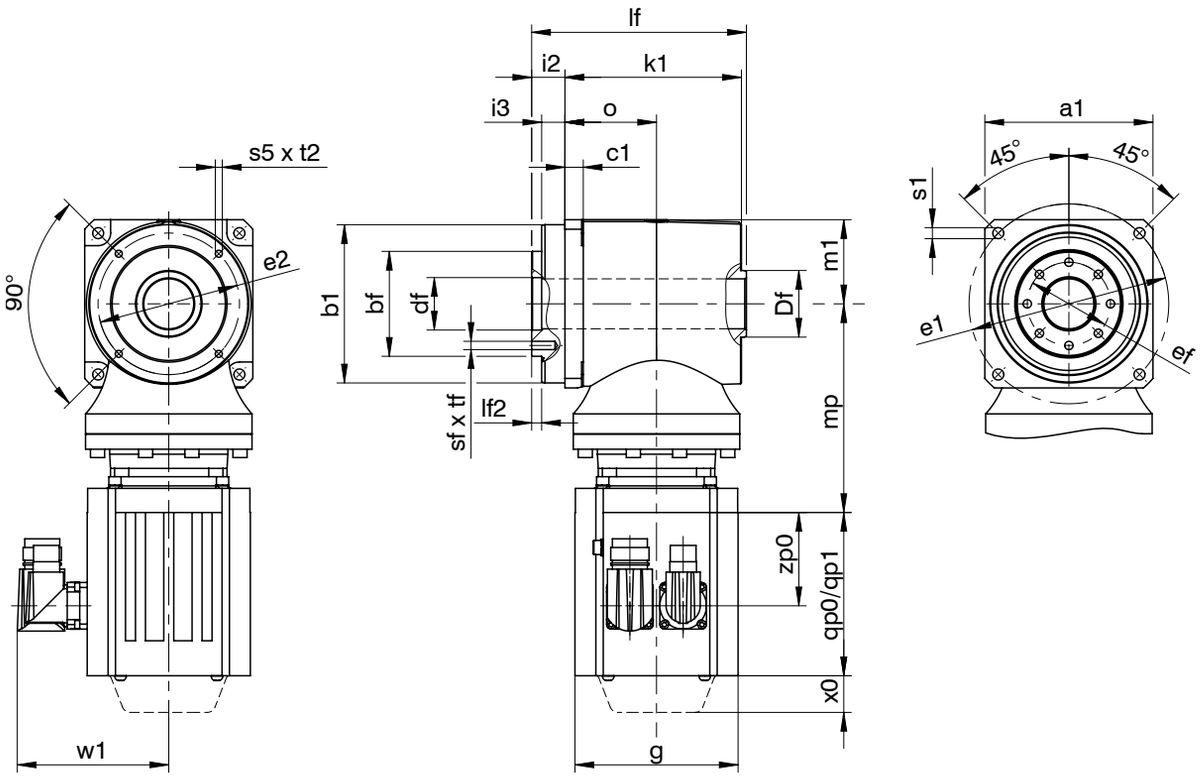

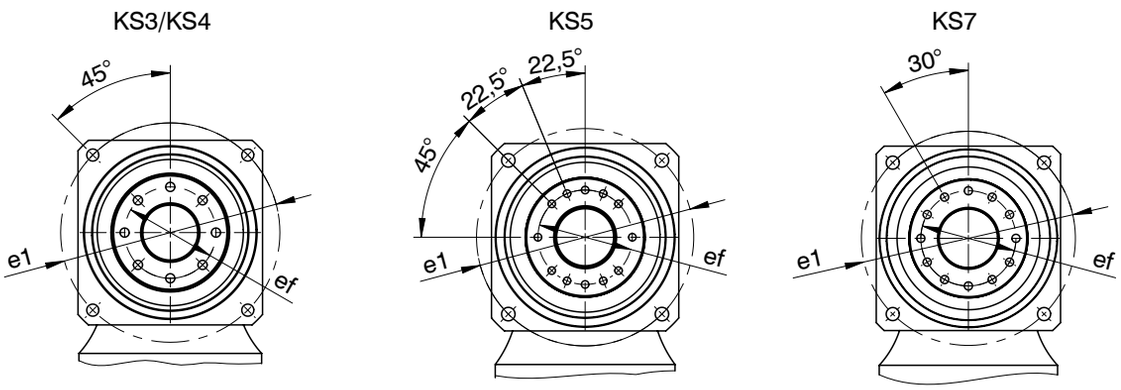

qp0	Applies to motors without brake.	qp1	Applies to motors with brake.
x0	EZ2: Applies only to motors with brake and encoders using an optical or inductive measuring method EZ3 – EZ8: Applies to encoders using an optical measuring method	w1	Different for the One Cable Solution (OCS), see the chapter [▶ 17.4]

Dimensions of gearboxes

Type	□a1	Øb1	bf	c1	Ødf	Ødf1	ØDf	Øe1	Øe2	ef	f1	i2	i3	k1	lf	lf2	m1	o	Øs1	s5	sf	t2	tf
KS311	80	75_{h6}	40_{h7}	8	20.0^{H7}	19	25_{d9}	90	68	31.5	13.0	16.5	13.0	88.5	107	3.5	40.0	43	6.6	M4	M5	8	9
KS312	80	75_{h6}	40_{h7}	8	20.0^{H7}	19	25_{d9}	90	68	31.5	13.0	16.5	13.0	88.5	107	3.5	40.0	43	6.6	M4	M5	8	9
KS313	80	75_{h6}	40_{h7}	8	20.0^{H7}	19	25_{d9}	90	68	31.5	13.0	16.5	13.0	88.5	107	3.5	40.0	43	6.6	M4	M5	8	9
KS411	101	95_{h6}	63_{h7}	10	31.5^{H7}	30	40_{d9}	120	85	50.0	14.0	20.0	14.0	106.0	129	6.0	50.5	55	6.6	M5	M6	9	11
KS412	101	95_{h6}	63_{h7}	10	31.5^{H7}	30	40_{d9}	120	85	50.0	14.0	20.0	14.0	106.0	129	6.0	50.5	55	6.6	M5	M6	9	11
KS413	101	95_{h6}	63_{h7}	10	31.5^{H7}	30	40_{d9}	120	85	50.0	14.0	20.0	14.0	106.0	129	6.0	50.5	55	6.6	M5	M6	9	11
KS511	125	120_{h6}	80_{h7}	10	40.0^{H7}	38	50_{d9}	145	105	63.0	15.5	22.0	15.5	125.0	150	6.5	62.5	65	9.0	M6	M6	12	12
KS512	125	120_{h6}	80_{h7}	10	40.0^{H7}	38	50_{d9}	145	105	63.0	15.5	22.0	15.5	125.0	150	6.5	62.5	65	9.0	M6	M6	12	12
KS513	125	120_{h6}	80_{h7}	10	40.0^{H7}	38	50_{d9}	145	105	63.0	15.5	22.0	15.5	125.0	150	6.5	62.5	65	9.0	M6	M6	12	12
KS711	155	150_{h6}	100_{h7}	15	50.0^{H7}	49	65_{d9}	180	126	80.0	20.0	27.0	20.0	150.0	180	7.0	77.5	80	11.0	M8	M8	14	16
KS712	155	150_{h6}	100_{h7}	15	50.0^{H7}	49	65_{d9}	180	126	80.0	20.0	27.0	20.0	150.0	180	7.0	77.5	80	11.0	M8	M8	14	16
KS713	155	150_{h6}	100_{h7}	15	50.0^{H7}	49	65_{d9}	180	126	80.0	20.0	27.0	20.0	150.0	180	7.0	77.5	80	11.0	M8	M8	14	16

Dimensions of motors

Type	□g	qp0	qp1	w1	x0	zp0
EZ202U	55	141	150.0	47.0	25	86.0
EZ203U	55	159	168.0	47.0	25	104.0
EZ301U	72	90	130.0	55.5	21	54.5
EZ302U	72	112	152.0	55.5	21	76.5
EZ303U	72	134	174.0	55.5	21	98.5
EZ401U	98	98	146.5	91.0	22	56.0
EZ402U	98	123	171.5	91.0	22	81.0
EZ404U	98	173	221.5	91.0	22	131.0
EZ501U	115	93	147.5	100.0	22	58.5
EZ502U	115	118	172.5	100.0	22	83.5
EZ503U	115	143	197.5	100.0	22	108.5
EZ505U	115	193	247.5	100.0	22	158.5
EZ701U	145	102	161.0	115.0	22	64.0
EZ702U	145	127	186.0	115.0	22	89.0
EZ703U	145	152	211.0	115.0	22	114.0
EZ705U	145	207	266.0	134.0	22	165.0
EZ813U	190	238	315.0	156.5	22	184.0
EZ815U	190	320	397.0	156.5	22	266.0

Dimensions of geared motors

Type	EZ2	EZ3	EZ4	EZ5	EZ7	EZ8
	mp	mp	mp	mp	mp	mp
KS311	–	151.5	146.0	–	–	–
KS312	99.0	112.5	–	–	–	–
KS313	131.0	–	–	–	–	–
KS411	–	–	165.8	170.3	–	–
KS412	–	128.8	125.3	–	–	–
KS413	149.8	163.3	–	–	–	–
KS511	–	–	–	196.0	199.0	–
KS512	–	–	154.0	153.5	–	–
KS513	–	191.0	187.5	–	–	–
KS711	–	–	–	–	236.0	242.0
KS712	–	–	–	185.0	188.0	–
KS713	–	–	227.0	226.5	–	–

9.3.2 S shaft design (hollow shaft with shrink disk)

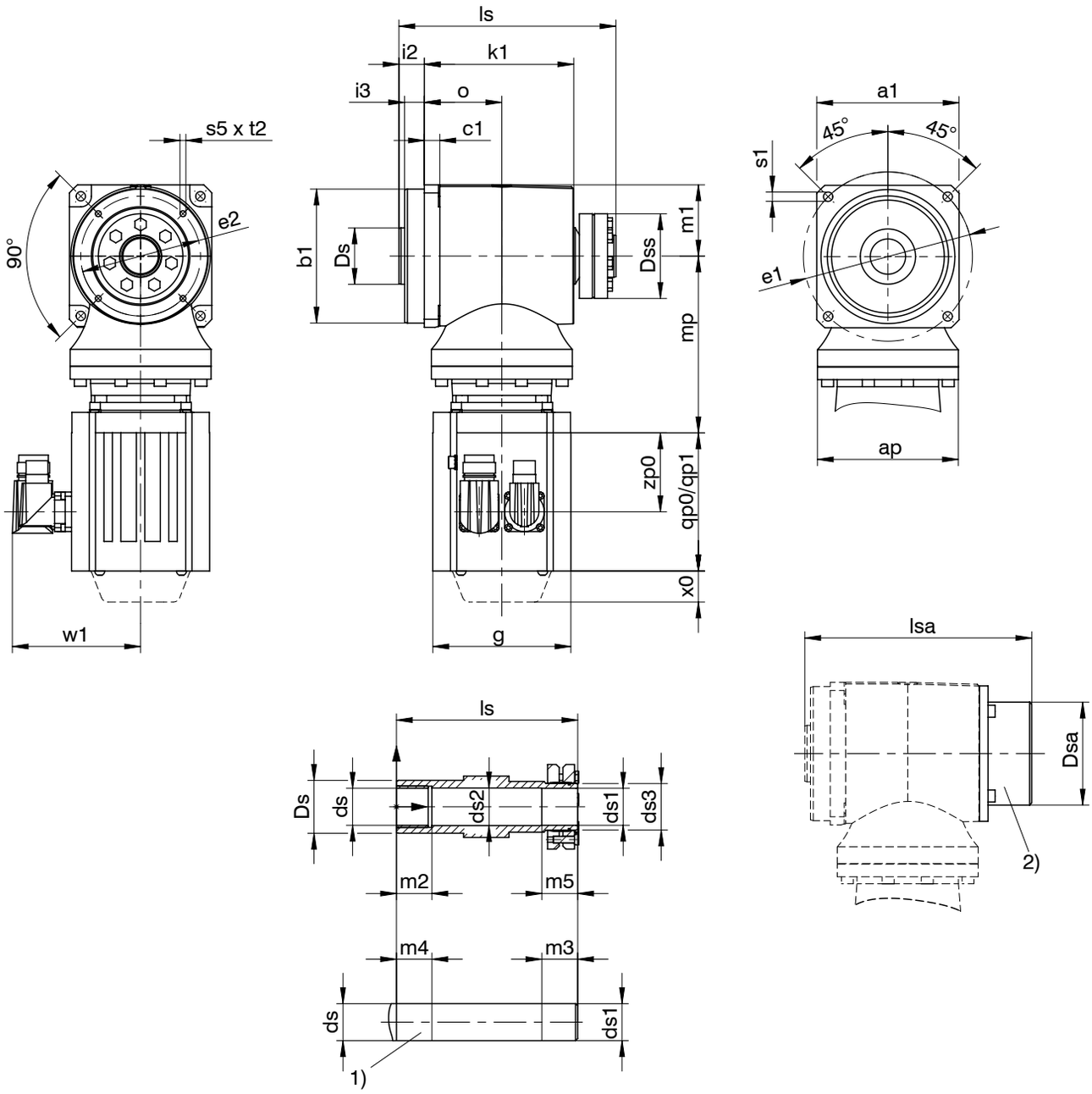

qp0	Applies to motors without brake.	qp1	Applies to motors with brake.
x0	EZ2: Applies only to motors with brake and encoders using an optical or inductive measuring method EZ3 – EZ8: Applies to encoders using an optical measuring method	w1	Different for the One Cable Solution (OCS), see the chapter [▶ 17.4]
1)	Machine shaft: The dimension ls must be met.	2)	Cover (optional)

Dimensions of gearboxes

Type	□a1	Øb1	c1	Øds	Øds1	Øds2	Øds3	ØDs	ØDsa	ØDss	Øe1	Øe2	f1	i2	i3	k1	ls	lsa	m1	m2	m3	m4	m5	o	Øs1	s5	t2
KS311	80	75_{h6}	8	16_{h6}	16_{h6}^{H7}	17.5	20	25	59	46	90	68	13.0	17.0	13.0	88.5	127.5	133.5	40.0	16	32	20	27	43	6.6	M4	8
KS312	80	75_{h6}	8	16_{h6}	16_{h6}^{H7}	17.5	20	25	59	46	90	68	13.0	17.0	13.0	88.5	127.5	133.5	40.0	16	32	20	27	43	6.6	M4	8
KS313	80	75_{h6}	8	16_{h6}	16_{h6}^{H7}	17.5	20	25	59	46	90	68	13.0	17.0	13.0	88.5	127.5	133.5	40.0	16	32	20	27	43	6.6	M4	8
KS411	101	95_{h6}	10	25_{h6}	25_{h6}^{H7}	25.5	30	40	73	60	120	85	14.0	18.0	14.0	106.0	154.0	161.0	50.5	20	34	25	29	55	6.6	M5	9
KS412	101	95_{h6}	10	25_{h6}	25_{h6}^{H7}	25.5	30	40	73	60	120	85	14.0	18.0	14.0	106.0	154.0	161.0	50.5	20	34	25	29	55	6.6	M5	9
KS413	101	95_{h6}	10	25_{h6}	25_{h6}^{H7}	25.5	30	40	73	60	120	85	14.0	18.0	14.0	106.0	154.0	161.0	50.5	20	34	25	29	55	6.6	M5	9
KS511	125	120_{h6}	10	35_{h6}	35_{h6}^{H7}	35.5	44	50	92	80	145	105	15.5	19.5	15.5	125.0	178.5	185.5	62.5	30	39	35	34	65	9.0	M6	12
KS512	125	120_{h6}	10	35_{h6}	35_{h6}^{H7}	35.5	44	50	92	80	145	105	15.5	19.5	15.5	125.0	178.5	185.5	62.5	30	39	35	34	65	9.0	M6	12
KS513	125	120_{h6}	10	35_{h6}	35_{h6}^{H7}	35.5	44	50	92	80	145	105	15.5	19.5	15.5	125.0	178.5	185.5	62.5	30	39	35	34	65	9.0	M6	12
KS711	155	150_{h6}	15	45_{h6}	45_{h6}^{H7}	45.5	55	65	113	100	180	126	20.0	24.0	20.0	150.0	214.0	221.0	77.5	40	42	45	37	80	11.0	M8	14
KS712	155	150_{h6}	15	45_{h6}	45_{h6}^{H7}	45.5	55	65	113	100	180	126	20.0	24.0	20.0	150.0	214.0	221.0	77.5	40	42	45	37	80	11.0	M8	14
KS713	155	150_{h6}	15	45_{h6}	45_{h6}^{H7}	45.5	55	65	113	100	180	126	20.0	24.0	20.0	150.0	214.0	221.0	77.5	40	42	45	37	80	11.0	M8	14

Dimensions of motors

Type	□g	qp0	qp1	w1	x0	zp0
EZ202U	55	141	150.0	47.0	25	86.0
EZ203U	55	159	168.0	47.0	25	104.0
EZ301U	72	90	130.0	55.5	21	54.5
EZ302U	72	112	152.0	55.5	21	76.5
EZ303U	72	134	174.0	55.5	21	98.5
EZ401U	98	98	146.5	91.0	22	56.0
EZ402U	98	123	171.5	91.0	22	81.0
EZ404U	98	173	221.5	91.0	22	131.0
EZ501U	115	93	147.5	100.0	22	58.5
EZ502U	115	118	172.5	100.0	22	83.5
EZ503U	115	143	197.5	100.0	22	108.5
EZ505U	115	193	247.5	100.0	22	158.5
EZ701U	145	102	161.0	115.0	22	64.0
EZ702U	145	127	186.0	115.0	22	89.0
EZ703U	145	152	211.0	115.0	22	114.0
EZ705U	145	207	266.0	134.0	22	165.0
EZ813U	190	238	315.0	156.5	22	184.0
EZ815U	190	320	397.0	156.5	22	266.0

Dimensions of geared motors

Type	EZ2	EZ3	EZ4	EZ5	EZ7	EZ8
	mp	mp	mp	mp	mp	mp
KS311	–	151.5	146.0	–	–	–
KS312	99.0	112.5	–	–	–	–
KS313	131.0	–	–	–	–	–
KS411	–	–	165.8	170.3	–	–
KS412	–	128.8	125.3	–	–	–
KS413	149.8	163.3	–	–	–	–
KS511	–	–	–	196.0	199.0	–
KS512	–	–	154.0	153.5	–	–
KS513	–	191.0	187.5	–	–	–
KS711	–	–	–	–	236.0	242.0
KS712	–	–	–	185.0	188.0	–
KS713	–	–	227.0	226.5	–	–

9.3.3 G shaft design (solid shaft without feather key)

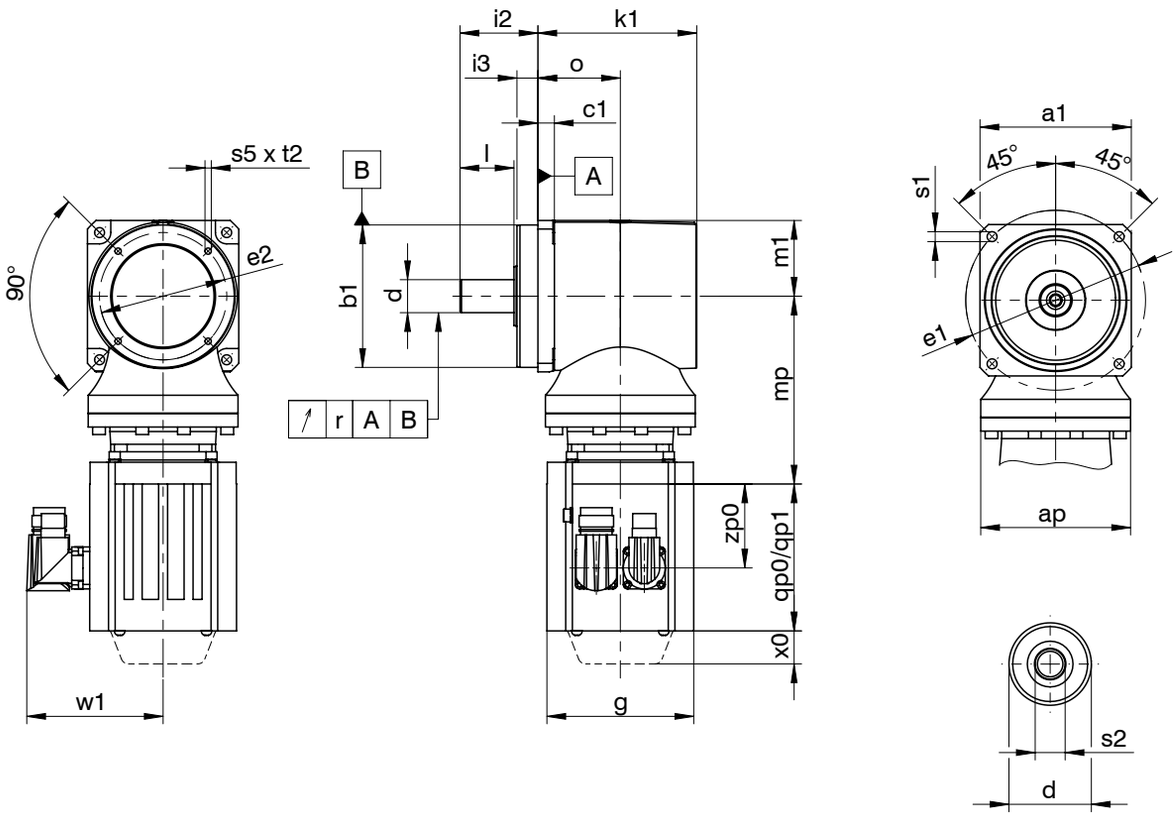

qp0	Applies to motors without brake.	qp1	Applies to motors with brake.
x0	EZ2: Applies only to motors with brake and encoders using an optical or inductive measuring method EZ3 – EZ8: Applies to encoders using an optical measuring method	w1	Different for the One Cable Solution (OCS), see the chapter [▶ 17.4]

Dimensions of gearboxes

Type	□a1	Øb1	c1	Ød	Øe1	Øe2	f1	i2	i3	l	k1	m1	o	r	Øs1	s2	s5	t2
KS311	80	75_{h6}	8	16_{k6}	90	68	13.0	43.0	13.0	28	88.5	40.0	43	0.020	6.6	M5	M4	8
KS312	80	75_{h6}	8	16_{k6}	90	68	13.0	43.0	13.0	28	88.5	40.0	43	0.020	6.6	M5	M4	8
KS313	80	75_{h6}	8	16_{k6}	90	68	13.0	43.0	13.0	28	88.5	40.0	43	0.020	6.6	M5	M4	8
KS411	101	95_{h6}	10	22_{k6}	120	85	14.0	52.0	14.0	36	106.0	50.5	55	0.020	6.6	M8	M5	9
KS412	101	95_{h6}	10	22_{k6}	120	85	14.0	52.0	14.0	36	106.0	50.5	55	0.020	6.6	M8	M5	9
KS413	101	95_{h6}	10	22_{k6}	120	85	14.0	52.0	14.0	36	106.0	50.5	55	0.020	6.6	M8	M5	9
KS511	125	120_{h6}	10	32_{k6}	145	105	15.5	75.5	15.5	58	125.0	62.5	65	0.020	9.0	M12	M6	12
KS512	125	120_{h6}	10	32_{k6}	145	105	15.5	75.5	15.5	58	125.0	62.5	65	0.020	9.0	M12	M6	12
KS513	125	120_{h6}	10	32_{k6}	145	105	15.5	75.5	15.5	58	125.0	62.5	65	0.020	9.0	M12	M6	12
KS711	155	150_{h6}	15	40_{k6}	180	126	20.0	105.0	20.0	82	150.0	77.5	80	0.025	11.0	M16	M8	14
KS712	155	150_{h6}	15	40_{k6}	180	126	20.0	105.0	20.0	82	150.0	77.5	80	0.025	11.0	M16	M8	14
KS713	155	150_{h6}	15	40_{k6}	180	126	20.0	105.0	20.0	82	150.0	77.5	80	0.025	11.0	M16	M8	14

Dimensions of motors

Type	□g	qp0	qp1	w1	x0	zp0
EZ202U	55	141	150.0	47.0	25	86.0
EZ203U	55	159	168.0	47.0	25	104.0
EZ301U	72	90	130.0	55.5	21	54.5
EZ302U	72	112	152.0	55.5	21	76.5
EZ303U	72	134	174.0	55.5	21	98.5
EZ401U	98	98	146.5	91.0	22	56.0
EZ402U	98	123	171.5	91.0	22	81.0
EZ404U	98	173	221.5	91.0	22	131.0
EZ501U	115	93	147.5	100.0	22	58.5
EZ502U	115	118	172.5	100.0	22	83.5
EZ503U	115	143	197.5	100.0	22	108.5
EZ505U	115	193	247.5	100.0	22	158.5
EZ701U	145	102	161.0	115.0	22	64.0
EZ702U	145	127	186.0	115.0	22	89.0
EZ703U	145	152	211.0	115.0	22	114.0
EZ705U	145	207	266.0	134.0	22	165.0
EZ813U	190	238	315.0	156.5	22	184.0
EZ815U	190	320	397.0	156.5	22	266.0

Dimensions of geared motors

Type	EZ2	EZ3	EZ4	EZ5	EZ7	EZ8
	mp	mp	mp	mp	mp	mp
KS311	–	151.5	146.0	–	–	–
KS312	99.0	112.5	–	–	–	–
KS313	131.0	–	–	–	–	–
KS411	–	–	165.8	170.3	–	–
KS412	–	128.8	125.3	–	–	–
KS413	149.8	163.3	–	–	–	–
KS511	–	–	–	196.0	199.0	–
KS512	–	–	154.0	153.5	–	–
KS513	–	191.0	187.5	–	–	–
KS711	–	–	–	–	236.0	242.0
KS712	–	–	–	185.0	188.0	–
KS713	–	–	227.0	226.5	–	–

9.3.4 P shaft design (solid shaft with feather key)

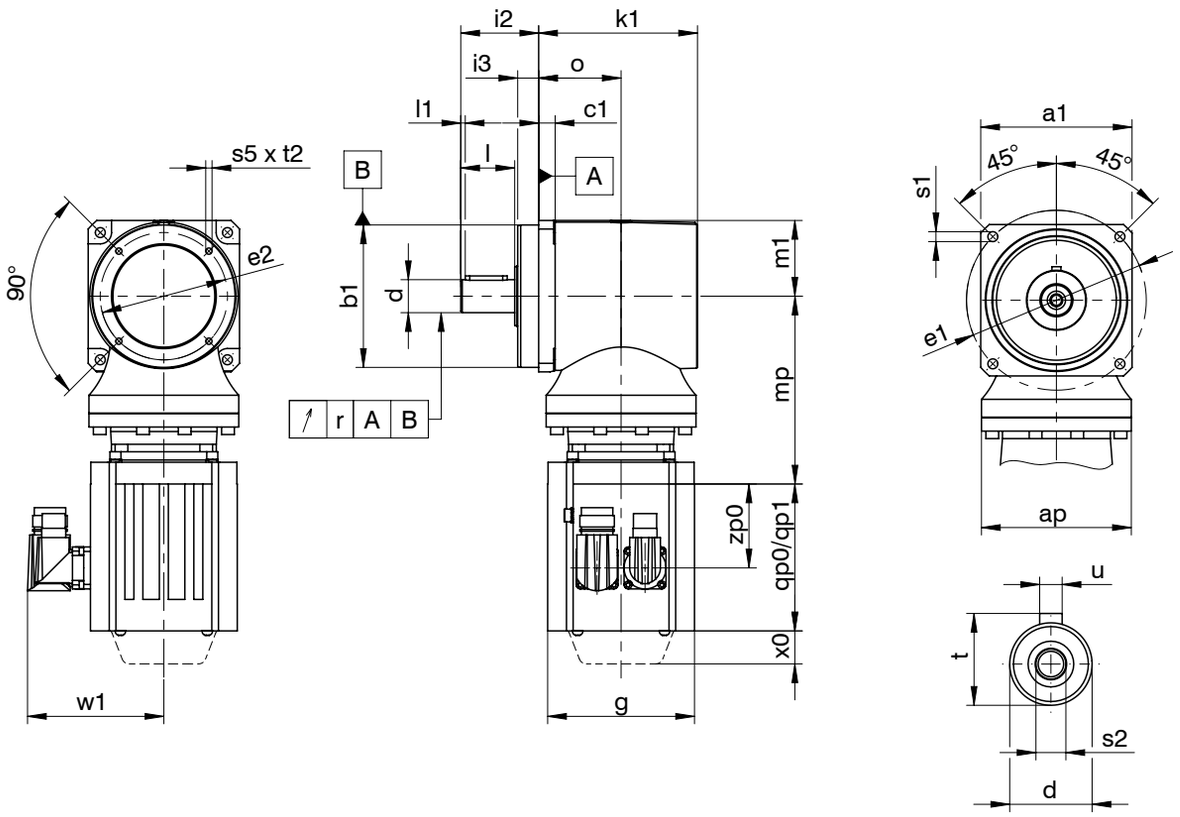

qp0	Applies to motors without brake.	qp1	Applies to motors with brake.
x0	EZ2: Applies only to motors with brake and encoders using an optical or inductive measuring method EZ3 – EZ8: Applies to encoders using an optical measuring method	w1	Different for the One Cable Solution (OCS), see the chapter [▶ 17.4]

Dimensions of gearboxes

Type	□a1	Øb1	c1	Ød	Øe1	Øe2	f1	i2	i3	l	l1	k1	m1	o	r	Øs1	s2	s5	t	t2	u
KS311	80	75_{h6}	8	16_{k6}	90	68	13.0	43.0	13.0	28	2	88.5	40.0	43	0.020	6.6	M5	M4	18.0	8	A5×5×22
KS312	80	75_{h6}	8	16_{k6}	90	68	13.0	43.0	13.0	28	2	88.5	40.0	43	0.020	6.6	M5	M4	18.0	8	A5×5×22
KS313	80	75_{h6}	8	16_{k6}	90	68	13.0	43.0	13.0	28	2	88.5	40.0	43	0.020	6.6	M5	M4	18.0	8	A5×5×22
KS411	101	95_{h6}	10	22_{k6}	120	85	14.0	52.0	14.0	36	3	106.0	50.5	55	0.020	6.6	M8	M5	24.5	9	A6×6×28
KS412	101	95_{h6}	10	22_{k6}	120	85	14.0	52.0	14.0	36	3	106.0	50.5	55	0.020	6.6	M8	M5	24.5	9	A6×6×28
KS413	101	95_{h6}	10	22_{k6}	120	85	14.0	52.0	14.0	36	3	106.0	50.5	55	0.020	6.6	M8	M5	24.5	9	A6×6×28
KS511	125	120_{h6}	10	32_{k6}	145	105	15.5	75.5	15.5	58	3	125.0	62.5	65	0.020	9.0	M12	M6	35.0	12	A10×8×50
KS512	125	120_{h6}	10	32_{k6}	145	105	15.5	75.5	15.5	58	3	125.0	62.5	65	0.020	9.0	M12	M6	35.0	12	A10×8×50
KS513	125	120_{h6}	10	32_{k6}	145	105	15.5	75.5	15.5	58	3	125.0	62.5	65	0.020	9.0	M12	M6	35.0	12	A10×8×50
KS711	155	150_{h6}	15	40_{k6}	180	126	20.0	105.0	20.0	82	4	150.0	77.5	80	0.025	11.0	M16	M8	43.0	14	A12×8×70
KS712	155	150_{h6}	15	40_{k6}	180	126	20.0	105.0	20.0	82	4	150.0	77.5	80	0.025	11.0	M16	M8	43.0	14	A12×8×70
KS713	155	150_{h6}	15	40_{k6}	180	126	20.0	105.0	20.0	82	4	150.0	77.5	80	0.025	11.0	M16	M8	43.0	14	A12×8×70

Dimensions of motors

Type	□g	qp0	qp1	w1	x0	zp0
EZ202U	55	141	150.0	47.0	25	86.0
EZ203U	55	159	168.0	47.0	25	104.0
EZ301U	72	90	130.0	55.5	21	54.5
EZ302U	72	112	152.0	55.5	21	76.5
EZ303U	72	134	174.0	55.5	21	98.5
EZ401U	98	98	146.5	91.0	22	56.0
EZ402U	98	123	171.5	91.0	22	81.0
EZ404U	98	173	221.5	91.0	22	131.0
EZ501U	115	93	147.5	100.0	22	58.5
EZ502U	115	118	172.5	100.0	22	83.5
EZ503U	115	143	197.5	100.0	22	108.5
EZ505U	115	193	247.5	100.0	22	158.5
EZ701U	145	102	161.0	115.0	22	64.0
EZ702U	145	127	186.0	115.0	22	89.0
EZ703U	145	152	211.0	115.0	22	114.0
EZ705U	145	207	266.0	134.0	22	165.0
EZ813U	190	238	315.0	156.5	22	184.0
EZ815U	190	320	397.0	156.5	22	266.0

Dimensions of geared motors

Type	EZ2	EZ3	EZ4	EZ5	EZ7	EZ8
	mp	mp	mp	mp	mp	mp
KS311	–	151.5	146.0	–	–	–
KS312	99.0	112.5	–	–	–	–
KS313	131.0	–	–	–	–	–
KS411	–	–	165.8	170.3	–	–
KS412	–	128.8	125.3	–	–	–
KS413	149.8	163.3	–	–	–	–
KS511	–	–	–	196.0	199.0	–
KS512	–	–	154.0	153.5	–	–
KS513	–	191.0	187.5	–	–	–
KS711	–	–	–	–	236.0	242.0
KS712	–	–	–	185.0	188.0	–
KS713	–	–	227.0	226.5	–	–

9.4 Type designation

In this chapter, you will find an explanation of the type designation with the associated options.

Additional ordering information not included in the type designation can be found at the end of the chapter.

Example code

KS	5	1	2	S	G	S	R	0200	EZ401U

Explanation

Code	Designation	Design
KS	Type	Right-angle servo gearbox
5	Size	5 (example)
1	Generation	Generation 1
1	Stages	Single-stage
2		Two-stage
3		Three-stage
S	Housing	Standard
F	Shaft	Flange hollow shaft
S		Hollow shaft with shrink ring
G		Solid shaft without feather key
P		Solid shaft with feather key
S	Bearing	Standard bearing
R	Backlash	Reduced
0200	Transmission ratio (i x 10)	i = 20 (example)
EZ401U	Motor	EZ synchronous servo motor

To complete the type designation, also specify the following in your order:

- A detailed type designation of the motor, see the chapter [▷ 17.5]
- Mounting position, see the chapter [▷ 9.5.3]
- Radial shaft seal rings at the output made of NBR or FKM (option), see the chapter [▷ 9.6.3]
- Position of the plug connectors, see the chapter [▷ 9.5.5]

To make selecting your geared motor easy, use our STOBER Configurator at https://configurator.stoeber.de/en-US/.

You can find a detailed description of the nameplate in the chapter [▷ 17.5.1].

9.5 Product description

9.5.1 Input options

EZ synchronous servo motor



Catalog ID 442437_en

The corresponding catalogs can be found at http://www.stoeber.de/en/downloads/

Enter the ID of the catalog in the Search term field.

9.5.2 Installation conditions

Take care to align the machine shaft with the gearbox hollow shaft when attaching the gearbox.

Maximum deviation ≤ 0.03 mm.

Hollow shaft with shrink ring

The tolerance of the hollow shaft hole is ISO H7.

The machine shaft must be ISO h6.

Select a material for the machine shaft with a permitted surface pressure of $p \geq 325\ N/mm^2$.

Possible materials:

- C45E +QT
- 42CrMo4

The torque and force values listed in this catalog are valid under the following conditions:

- When the gear housing is fastened on the machine side using screws of strength class 12.9
- When the gear housing is adjusted at pilot øb1. The machine-side fit must be H7.
- For the flange hollow shaft design: If the connecting element is fitted to pilot øbf or ødf of the flange hollow shaft and fastened using screws of strength class 12.9.

9.5.3 Mounting positions

The following table shows the standard mounting positions for two- and three-stage gearboxes. Single-stage gearboxes can be used in any mounting position.

The numbers identify the gearbox sides. The mounting position is defined by the gearbox side facing downwards.

EL1	EL2	EL3
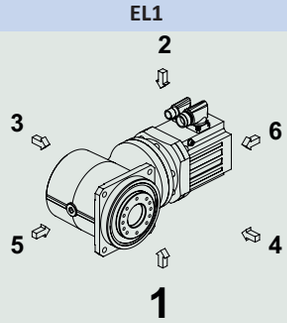	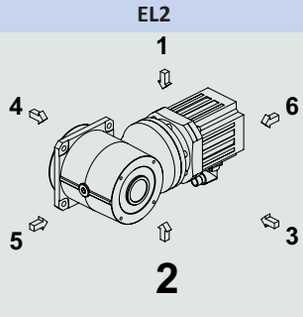	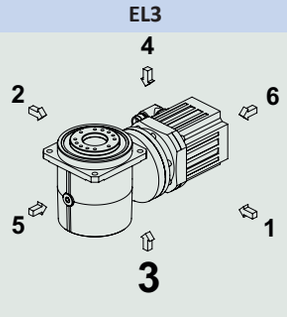
EL4	**EL5**	**EL6**
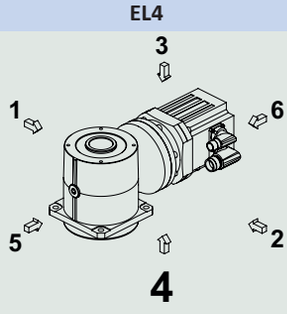	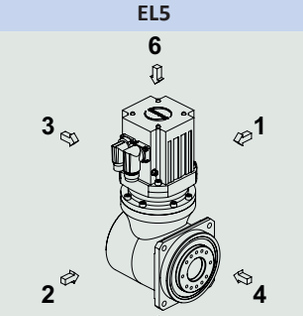	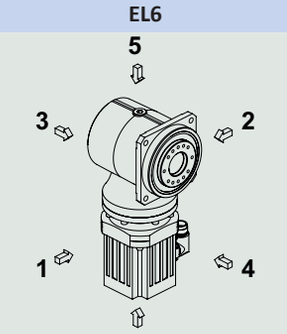

Since the lubricant filling volume of the gearbox depends on the mounting position, the mounting position for two- and three-stage gearboxes must be specified when ordering.

9.5.4 Lubricants

STOBER fills the gearboxes with the amount and type of lubricant specified on the nameplate. The filling volume and the structure of the gearboxes depend on the mounting position.

Only install the gearboxes in the intended mounting position! Reposition the gearboxes only after consulting STOBER. Otherwise, STOBER assumes no liability for the gearboxes.

You will receive lubricants for use in the food industry upon request.

9.5.5 Position of the plug connectors

Mounting position EL1 Plug connector in 270° position (standard)	Mounting position EL4 Plug connector in 270° position (standard)
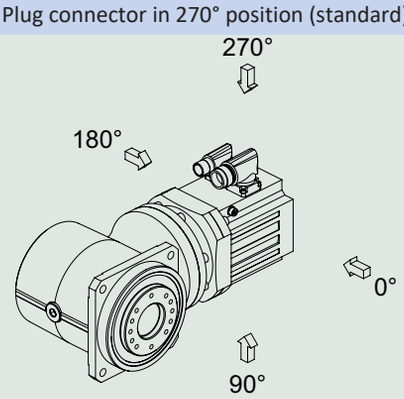	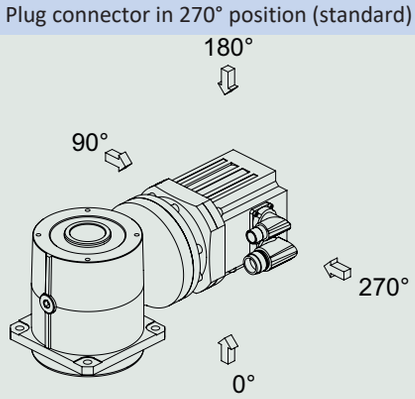

Indicate variations for your geared motor in the order.

Note that the plug connector position rotates along with the geared motor if the geared motor is in another mounting position.

9.5.6 Other product features

Feature	Value
Max. permitted gearbox temperature (on the surface of the gearbox)	≤ 90 °C
Paint	Black RAL 9005
Explosion-proof design in accordance with (ATEX) Directive 2014/34/EU (optional)	Not available
Efficiency:	
η_{get} single-stage	97%
η_{get} two-stage	95%
η_{get} three-stage	93%
Protection class:[1]	
Gearbox	IP65
Motor	IP56, optionally IP66

9.5.7 Direction of rotation

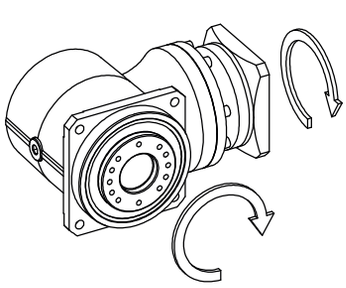

The figure shows the EL1 mounting position.

[1] Observe the protection class of all the components.

9.6 Project configuration

Project your drives using our SERVOsoft designing software. Download SERVOsoft free of charge after registration at https://www.stoeber.de/en/services/info-servosoft/.

It is the most convenient and reliable method of drive selection, as the entire torque/speed curve of the application is displayed and evaluated here in the curve of the geared motor.

In this chapter, only limit values for specific operating points can be taken into consideration for manual drive selection.

An explanation of the formula symbols can be found in Chapter [▷ 20.1].

The formula symbols for values actually present in the application are marked with *.

9.6.1 Drive selection

Drive selection for gearboxes

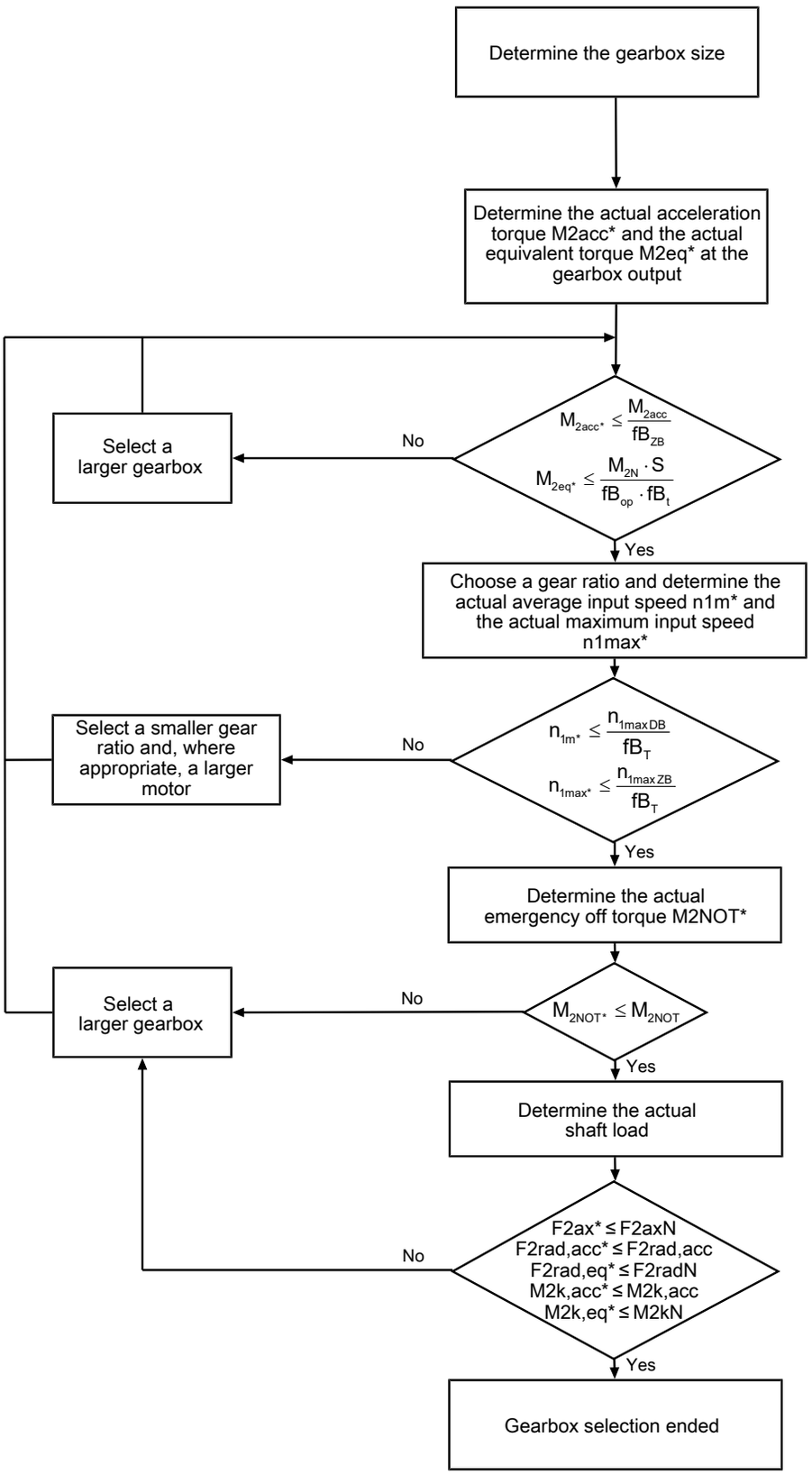

Calculate the forces and tilting torques in the chapter Permitted shaft loads.

Refer to the selection tables for the values for i, n_{1maxDB}, n_{1maxZB}, M_{2acc}, M_{2NOT}, M_{2N} and S.

The values for fB_T, fB_{op}, fB_t and fB_{ZB} can be found in the corresponding tables in this chapter.

Drive selection for motors

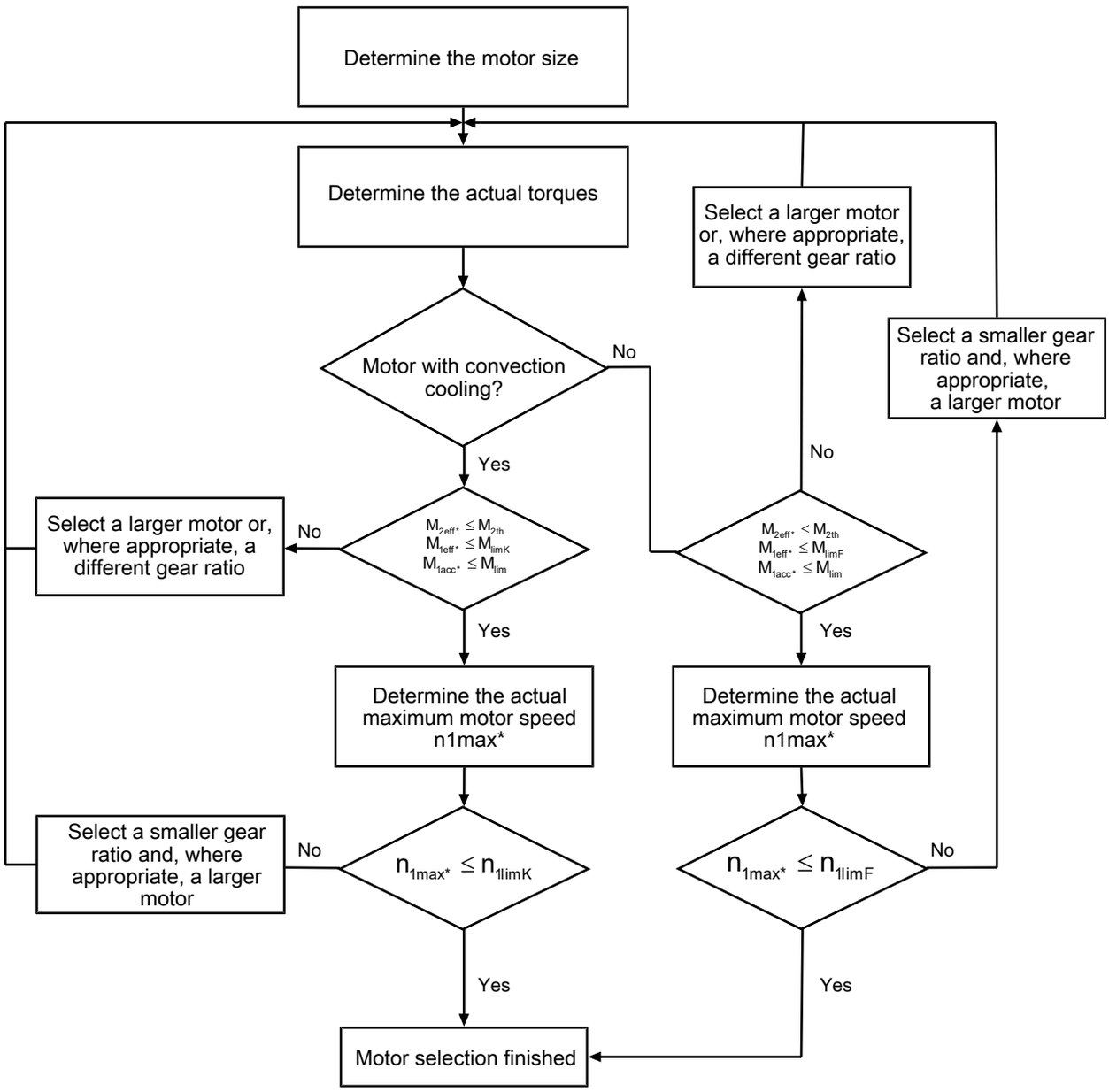

The value for M_{lim}, M_{limK}, M_{limF}, n_{1limK} and n_{1limF} can be found in the motor characteristic curve in the chapter [▷ 17.3]. Note the size, nominal speed n_N and cooling type of the motor.

Example of cyclic operation

The following calculations are based on a representation of the power taken from the output based in accordance with the following example:

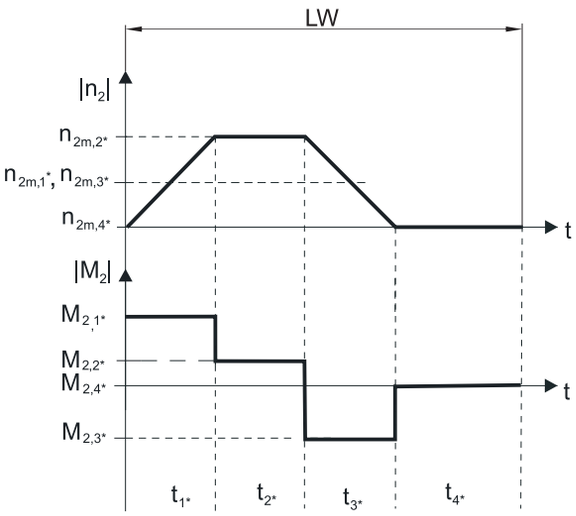

Calculation of the actual maximum acceleration torques

$$M_{2acc*} = J_{tot} \cdot \frac{\Delta n_2}{9{,}55 \cdot \Delta t} + M_{L*}$$

$$M_{1acc*} = \frac{M_{2acc*}}{i \cdot \eta_{get}} + J_1 \cdot \frac{\Delta n_1}{9{,}55 \cdot \Delta t}$$

Calculation of the actual average input speed

$$n_{1m*} = n_{2m*} \cdot i$$

$$n_{2m*} = \frac{\left|n_{2m,1*}\right| \cdot t_{1*} + \ldots + \left|n_{2m,n*}\right| \cdot t_{n*}}{t_{1*} + \ldots + t_{n*}}$$

If $t_{1*} + \ldots + t_{3*} \geq 6$ min, calculate n_{2m*} without the rest phase t_{4*}.

The values for the ratio i can be found in the selection tables.

Calculation of the actual effective torque

$$M_{2eff*} = \sqrt{\frac{t_{1*} \cdot M_{2,1*}{}^2 + \ldots + t_{n*} \cdot M_{2,n*}{}^2}{t_{1*} + \ldots + t_{n*}}}$$

Calculation of the actual emergency off torque

$$M_{2NOT*} = J_{tot} \cdot \frac{\Delta n_2}{9.55 \cdot \Delta t} + M_{L*}$$

Calculation of the actual equivalent torque

$$M_{2eq*} = \sqrt[3]{\frac{\left|n_{2m,1*}\right| \cdot t_{1*} \cdot \left|M_{2,1*}{}^3\right| + \ldots + \left|n_{2m,n*}\right| \cdot t_{n*} \cdot \left|M_{2,n*}{}^3\right|}{\left|n_{2m,1*}\right| \cdot t_{1*} + \ldots + \left|n_{2m,n*}\right| \cdot t_{n*}}}$$

Calculation of the thermal limit torque

Calculate the thermal limit torque M_{2th} for a duty cycle $ED_{10} > 50\%$ and the actual average input speed n_{1m*}. (At $K_{mot,th} \leq 0$ you must reduce the average input speed n_{1m*} accordingly or select another geared motor size.)

$$M_{2th} = M_{op} \cdot i \cdot K_{mot,th}$$

$$K_{mot,th} = 0{,}93 - \frac{a_{th}}{1000} \cdot fB_T \cdot \left(\frac{n_{1m*}}{1000}\right)^3$$

Refer to the selection tables for the values of i and a_{th}.

The values for fB_T can be found in the corresponding table in this chapter.

The value for the torque of the motor at operating point M_{op} with the determined average input speed n_{1m*} can be found in the motor characteristic curve in the chapter [▶ 17.3]. Note the size, nominal speed n_N and cooling type of the motor. The figure below shows an example of reading the torque M_{op} of a motor with convection cooling at the operating point.

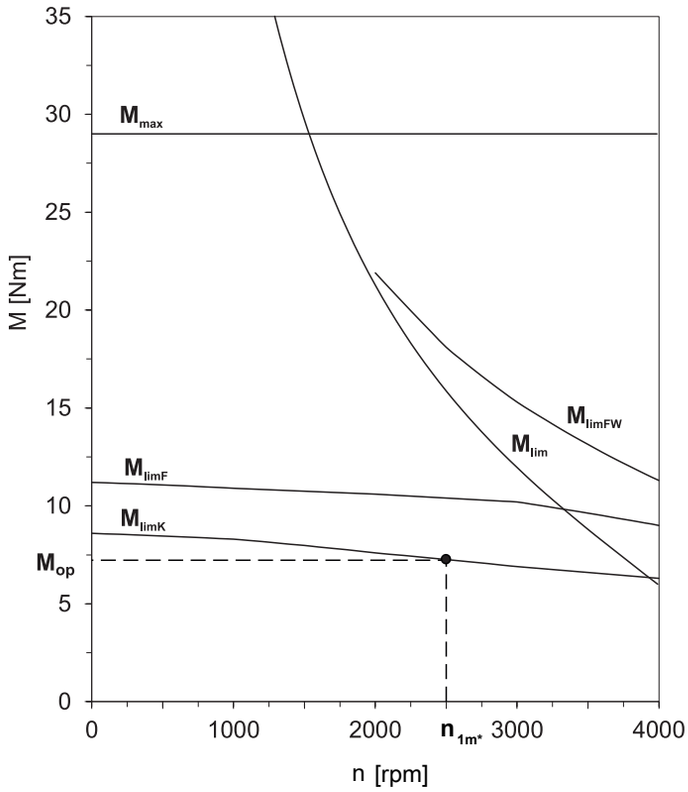

Operating factors

Operating mode	fB_{op}
Uniform continuous operation	1.00
Cyclic operation	1.00
Reversing load cyclic operation	1.00

Run time	fB_t
Daily runtime ≤ 8 h	1.00
Daily runtime ≤ 16 h	1.15
Daily runtime ≤ 24 h	1.20

Cyclic operation	fB_{ZB}
≤ 1000 load changes/hour (LW/h)	1.00
> 1000 load changes/hour (LW/h)	1.15

Temperature		fB_T
Motor cooling	**Surrounding temperature**	
Motor with forced ventilation	≤ 20 °C	0.9
	≤ 30 °C	1.0
	≤ 40 °C	1.15
Motor with convection cooling	≤ 20 °C	1.0
	≤ 30 °C	1.1
	≤ 40 °C	1.25

Notes

- The maximum permitted gearbox temperature (see the "Other product features" chapter) must not be exceeded. Doing so may result in damage to the geared motor.
- For braking from full speed (for example when the power fails or when setting up the machine), note the permitted gearbox torques (M_{2acc}, M_{2NOT}) in the selection tables.

9.6.2 Permitted shaft loads for the output shaft

The values specified in the tables apply to the permitted shaft loads:

- For shaft dimensions in accordance with the catalog
- For output speeds $n_{2m*} \leq 100$ rpm ($F^{2axN} = F_{2ax100}$; $F_{2radN} = F_{2rad100}$; $M_{2kN} = M_{2k100}$)
- Only if radial forces on the gearbox are stabilized by its pilots (housing, flange shaft)

9.6.2.1 F shaft design

Permitted shaft loads for F shaft design (flange hollow shaft)

Type	z_2 [mm]	F_{2ax100} [N]	$F_{2rad100}$ [N]	$F_{2rad,acc}$ [N]	M_{2k100} [Nm]	$M_{2k,acc}$ [Nm]
KS3	32.5	2500	4500	5000	146	163
KS4	40.5	4000	7500	10300	304	417
KS5	47.0	6000	13700	18500	644	870
KS7	55.5	10000	18400	25100	1020	1400

For other output speeds, download diagrams at https://configurator.stoeber.de/en-US/.

The following applies to output speeds $n_{2m*} > 100$ rpm:

$$F_{2axN} = \frac{F_{2ax100}}{\sqrt[3]{\frac{n_{2m*}}{100\ \text{rpm}}}} \qquad F_{2radN} = \frac{F_{2rad100}}{\sqrt[3]{\frac{n_{2m*}}{100\ \text{rpm}}}} \qquad M_{2kN} = \frac{M_{2k100}}{\sqrt[3]{\frac{n_{2m*}}{100\ \text{rpm}}}}$$

The values for F_{2ax100}, $F_{2rad100}$ and M_{2k100} can be found in the table "Permitted shaft loads" in this chapter.

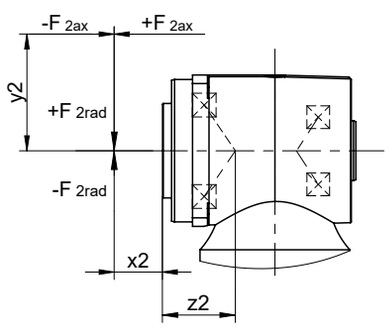

Fig. 1: Force application points for flange hollow shaft

You can determine the permitted radial forces from the permitted tilting torque M_{2kN} and $M_{2k,acc}$. The actual radial forces may not exceed the permitted radial forces. The permitted radial forces pertain to the shaft end (x2 = 0).

$$M_{2k,acc*} = \frac{F_{2ax*} \cdot y_2 + F_{2rad,acc*} \cdot (x_2 + z_2)}{1000}$$

For applications with multiple axial and/or radial forces, you must add the forces as vectors.

In the event of EMERGENCY OFF operation (max. 1000 load changes), you can multiply the permitted forces and torques for F_{2ax20}, F_{2rad20} and M_{2k20} by a factor of two.

Also note the calculation for equivalent values:

$$M_{2k,eq*} = \sqrt[3]{\frac{|n_{2m,1*}| \cdot t_{1*} \cdot |M_{2k,acc,1*}{}^3| + \ldots + |n_{2m,n*}| \cdot t_{n*} \cdot |M_{2k,acc,n*}{}^3|}{|n_{2m,1*}| \cdot t_{1*} + \ldots + |n_{2m,n*}| \cdot t_{n*}}}$$

$$F_{2rad,eq*} = \sqrt[3]{\frac{|n_{2m,1*}| \cdot t_{1*} \cdot |F_{2rad,acc,1*}{}^3| + \ldots + |n_{2m,n*}| \cdot t_{n*} \cdot |F_{2rad,acc,n*}{}^3|}{|n_{2m,1*}| \cdot t_{1*} + \ldots + |n_{2m,n*}| \cdot t_{n*}}}$$

9.6.2.2 S shaft design

Permitted shaft loads for S shaft design (hollow shaft with shrink ring)

Type	z_2 [mm]	F_{2ax100} [N]	$F_{2rad100}$ [N]	$F_{2rad,acc}$ [N]	M_{2k100} [Nm]	$M_{2k,acc}$ [Nm]
KS3	31.0	2500	2750	2750	124	124
KS4	38.5	4000	5000	5000	283	283
KS5	44.5	6000	9000	9000	662	662
KS7	52.5	10000	11000	11000	1030	1030

For other output speeds, download diagrams at https://configurator.stoeber.de/en-US/.

The following applies to output speeds n_{2m*} > 100 rpm:

$$F_{2axN} = \frac{F_{2ax100}}{\sqrt[3]{\frac{n_{2m*}}{100\ rpm}}} \qquad F_{2radN} = \frac{F_{2rad100}}{\sqrt[3]{\frac{n_{2m*}}{100\ rpm}}} \qquad M_{2kN} = \frac{M_{2k100}}{\sqrt[3]{\frac{n_{2m*}}{100\ rpm}}}$$

The values for F_{2ax100}, $F_{2rad100}$ and M_{2k100} can be found in the table "Permitted shaft loads" in this chapter.

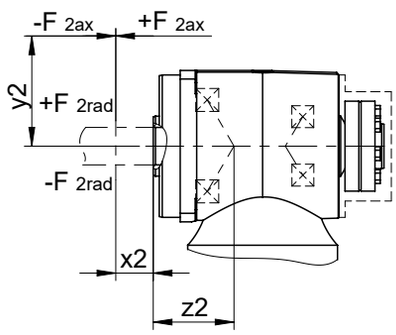

Fig. 2: Force application points for the hollow shaft with shrink ring

You can determine the permitted radial forces from the permitted tilting torque M_{2kN} and $M_{2k,acc}$. The actual radial forces may not exceed the permitted radial forces. The permitted radial forces pertain to the shaft end (x2 = 0).

$$M_{2k,acc*} = \frac{2 \cdot F_{2ax*} \cdot y_2 + F_{2rad,acc*} \cdot (x_2 + z_2)}{1000}$$

For applications with multiple axial and/or radial forces, you must add the forces as vectors.

In the event of EMERGENCY OFF operation (max. 1000 load changes), you can multiply the permitted forces and torques for F_{2ax20}, F_{2rad20} and M_{2k20} by a factor of two.

Also note the calculation for equivalent values:

$$M_{2k,eq*} = \sqrt[3]{\frac{|n_{2m,1*}| \cdot t_{1*} \cdot |M_{2k,acc,1*}{}^3| + \ldots + |n_{2m,n*}| \cdot t_{n*} \cdot |M_{2k,acc,n*}{}^3|}{|n_{2m,1*}| \cdot t_{1*} + \ldots + |n_{2m,n*}| \cdot t_{n*}}}$$

$$F_{2rad,eq*} = \sqrt[3]{\frac{|n_{2m,1*}| \cdot t_{1*} \cdot |F_{2rad,acc,1*}{}^3| + \ldots + |n_{2m,n*}| \cdot t_{n*} \cdot |F_{2rad,acc,n*}{}^3|}{|n_{2m,1*}| \cdot t_{1*} + \ldots + |n_{2m,n*}| \cdot t_{n*}}}$$

9.6.2.3 G and P shaft designs

Permitted shaft loads for G and P shaft designs (solid shaft)

Type	z_2 [mm]	F_{2ax100} [N]	$F_{2rad100}$ [N]	$F_{2rad,acc}$ [N]	M_{2k100} [Nm]	$M_{2k,acc}$ [Nm]
KS3	31.0	2500	2750	2750	124	124
KS4	36.5	4000	5000	5000	273	273
KS5	42.5	6000	9000	9000	644	644
KS7	51.5	10000	11000	11000	1020	1020

For other output speeds, download diagrams at https://configurator.stoeber.de/en-US/.

The following applies to output speeds n_{2m*} > 100 rpm:

$$F_{2axN} = \frac{F_{2ax100}}{\sqrt[3]{\frac{n_{2m*}}{100\ rpm}}} \qquad F_{2radN} = \frac{F_{2rad100}}{\sqrt[3]{\frac{n_{2m*}}{100\ rpm}}} \qquad M_{2kN} = \frac{M_{2k100}}{\sqrt[3]{\frac{n_{2m*}}{100\ rpm}}}$$

The values for F_{2ax100}, $F_{2rad100}$ and M_{2k100} can be found in the table "Permitted shaft loads" in this chapter.

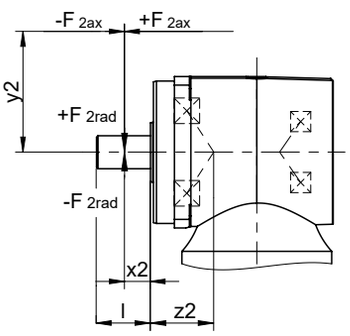

Fig. 3: Force application points for solid shaft

The specified values for $F_{2rad100}$ and $F_{2rad,acc}$ refer to an application of force at the center of the output shaft: $x_2 = l/2$.

Shaft dimensions can be found in the "Dimensional drawings" chapter.

The following applies to other force application points:

$$M_{2k,acc*} = \frac{2 \cdot F_{2ax*} \cdot y_2 + F_{2rad,acc*} \cdot (x_2 + z_2)}{1000}$$

For applications with multiple axial and/or radial forces, you must add the forces as vectors.

In the event of EMERGENCY OFF operation (max. 1000 load changes), you can multiply the permitted forces and torques for F_{2ax20}, F_{2rad20} and M_{2k20} by a factor of two.

Also note the calculation for equivalent values:

$$M_{2k,eq*} = \sqrt[3]{\frac{|n_{2m,1*}| \cdot t_{1*} \cdot |M_{2k,acc,1*}{}^3| + \ldots + |n_{2m,n*}| \cdot t_{n*} \cdot |M_{2k,acc,n*}{}^3|}{|n_{2m,1*}| \cdot t_{1*} + \ldots + |n_{2m,n*}| \cdot t_{n*}}}$$

$$F_{2rad,eq*} = \sqrt[3]{\frac{|n_{2m,1*}| \cdot t_{1*} \cdot |F_{2rad,acc,1*}{}^3| + \ldots + |n_{2m,n*}| \cdot t_{n*} \cdot |F_{2rad,acc,n*}{}^3|}{|n_{2m,1*}| \cdot t_{1*} + \ldots + |n_{2m,n*}| \cdot t_{n*}}}$$

9.6.3 Recommendation for radial shaft seal rings

For a duty cycle > 60% and higher surrounding temperatures, we recommend radial shaft seal rings made of FKM at the output.

Properties:

- Excellent temperature resistance
- High chemical stability
- Very good resistance to aging
- Excellent resistance in oils and greases
- For use in the food, beverage and pharmaceutical industries

Leak-proofness

Our gearboxes are equipped with high-quality radial shaft seal rings and checked for leaks. However, a leak cannot be fully ruled out over the length of use of a gearbox. If you use a gearbox with goods incompatible with the lubricant, you must take measures to prevent direct contact with the gearbox lubricant in case of a leak.

9.7 Additional documentation

Additional documentation related to the product can be found at
http://www.stoeber.de/en/downloads/

Enter the ID of the documentation in the Search term field.

Documentation	ID
Operating manual gearboxes, geared motors KS31 – KS71	443506_en
Operating manual for EZ synchronous servo motors	443032_en

10 PKX right-angle planetary geared motors

Table of contents

10.1 Overview 266

10.2 Selection tables 267

10.3 Dimensional drawings 283

10.3.1 G shaft design (solid shaft without feather key) 284

10.3.2 P shaft design (solid shaft with feather key) 286

10.4 Type designation 288

10.5 Product description 289

10.5.1 Input options 289

10.5.2 Installation conditions 289

10.5.3 Mounting positions 289

10.5.4 Lubricants 290

10.5.5 Position of the plug connectors 290

10.5.6 Other product features 290

10.5.7 Direction of rotation 290

10.6 Project configuration 291

10.6.1 Drive selection 292

10.6.2 Permitted shaft loads for the output shaft 296

10.6.3 Recommendation for radial shaft seal rings 298

10.6.4 Reverse operation 299

10.7 Additional documentation 299

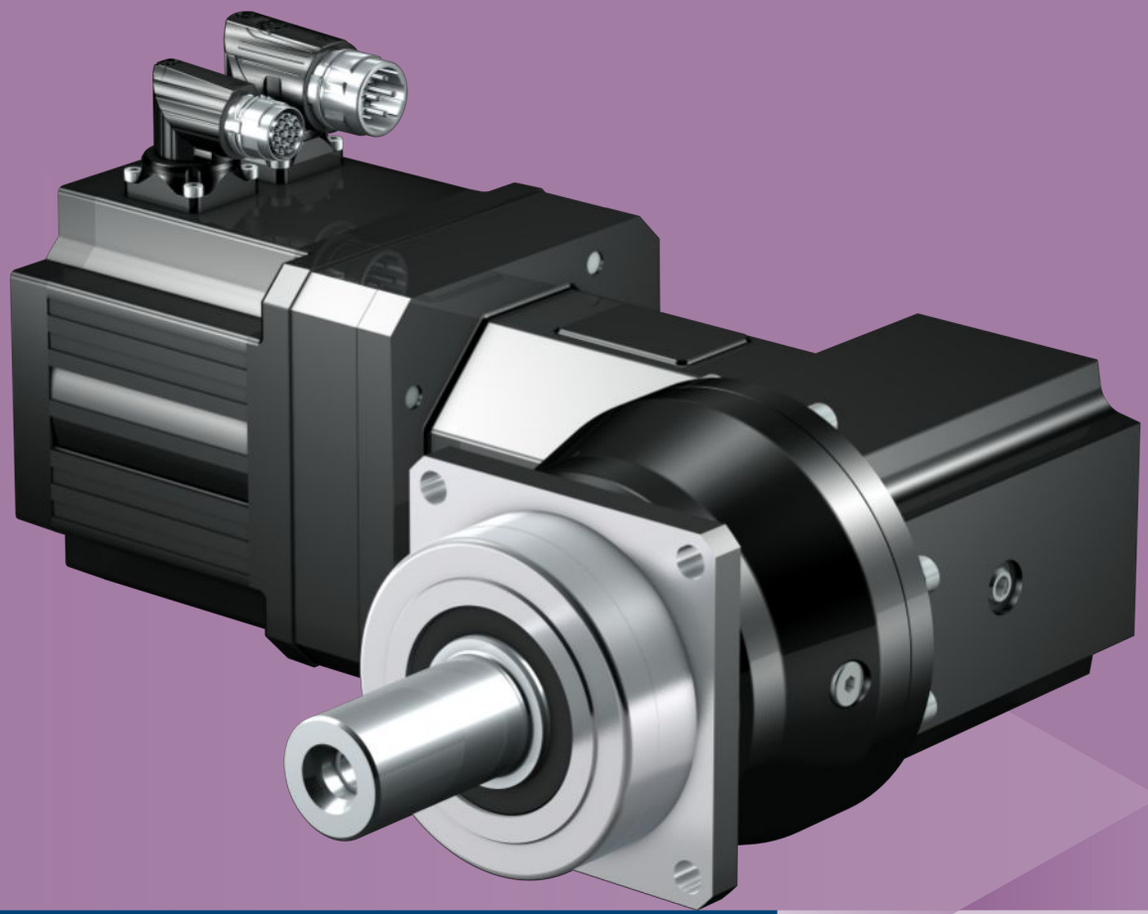

10

Right-angle planetary geared motors

PKX

10.1 Overview

Helical-geared precision right-angle planetary geared motors

Features

Power density	★★★★☆
Backlash	★★★★★
Price category	€€€
Shaft load	★★★★☆
Smooth operation	★★☆☆☆
Torsional stiffness	★★★☆☆
Mass moment of inertia	★★★☆☆
Helical gearing	✓
Maintenance-free	✓
Small installation space	✓
Continuous operation without cooling	✓
Reinforced output bearing	✓ (optional)
Compact and highly dynamic due to direct motor attachment	✓

Key ★☆☆☆☆ good | ★★★★★ excellent
€ Economy | €€€€€ Premium

Technical data

i	3 – 300
M_{2acc}	11 – 3300 Nm
$\Delta\phi_2$	2 – 8.5 arcmin
η_{get}	94 – 96 %

10.2 Selection tables

The technical data specified in the selection tables applies to:

- Installation altitudes up to 1000 m above sea level
- Surrounding temperatures from 0 °C to 40 °C
- Drives with convection-cooled motors (e.g. EZ401**U**)
- M_{2acc}, M_{2accHT}: Solid shaft design without feather key (we generally recommend this shaft design for cyclic operation)

For the technical data on drives with forced ventilated motors (e.g. EZ401**B**), refer to https://configurator.stoeber.de/en-US/.

An explanation of the formula symbols can be found in Chapter [▷ 20.1].

n_{2N} [rpm]	M_{2N} [Nm]	$M_{2,0}$ [Nm]	a_{th}	S	Type	M_{2acc} [Nm]	M_{2accHT} [Nm]	M_{2NOT} [Nm]	i	i_{exakt}	n_{1maxDB} EL1,2,5,6 [rpm]	n_{1maxDB} EL3,4 [rpm]	n_{1maxZB} [rpm]	J_1 [kgcm²]	$\Delta\varphi_2$ [arcmin]	$\Delta\varphi_{2red}$ [arcmin]	C_2 [Nm/arcmin]	m [kg]
P231KX (n_{1N} = 3000 min^{-1}, $M_{2acc,max}$ = 25 Nm)																		
200	13	14	35	1.2	P231_0050KX301_0030 MF EZ301U	25	–	51	15.00	15/1	3500	3500	6000	0.94	8.0	–	1.6	4.5
250	11	11	28	1.5	P231_0040KX301_0030 MF EZ301U	25	–	51	12.00	12/1	3500	3500	6000	0.94	8.5	–	1.5	4.5
300	8.9	9.1	32	1.8	P231_0050KX301_0020 MF EZ301U	25	–	51	10.00	10/1	3500	3000	5500	1.0	8.0	–	1.6	4.5
300	15	16	54	1.1	P231_0050KX301_0020 MF EZ302U	25	–	51	10.00	10/1	3500	3000	5500	1.1	8.0	–	1.6	5.1
375	7.1	7.3	25	2.3	P231_0040KX301_0020 MF EZ301U	21	–	51	8.000	8/1	3500	3000	5500	1.0	8.5	–	1.5	4.5
375	12	13	43	1.3	P231_0040KX301_0020 MF EZ302U	25	–	51	8.000	8/1	3500	3000	5500	1.1	8.5	–	1.5	5.1
375	16	17	56	1.0	P231_0040KX301_0020 MF EZ303U	25	–	51	8.000	8/1	3500	3000	5500	1.2	8.5	–	1.5	5.6
429	6.2	6.4	44	2.2	P231_0070KX301_0010 MF EZ301U	19	–	46	7.000	7/1	3000	2500	4500	1.2	7.5	–	1.7	4.5
429	11	11	76	1.3	P231_0070KX301_0010 MF EZ302U	23	–	46	7.000	7/1	3000	2500	4500	1.3	7.5	–	1.7	5.1
600	4.4	4.5	32	3.0	P231_0050KX301_0010 MF EZ301U	13	–	51	5.000	5/1	3000	2500	4500	1.2	8.0	–	1.6	4.5
600	7.6	8.0	54	1.8	P231_0050KX301_0010 MF EZ302U	24	–	51	5.000	5/1	3000	2500	4500	1.3	8.0	–	1.6	5.1
600	9.9	10	70	1.4	P231_0050KX301_0010 MF EZ303U	25	–	51	5.000	5/1	3000	2500	4500	1.4	8.0	–	1.6	5.6
600	13	14	95	1.0	P231_0050KX301_0010 MF EZ401U	25	–	51	5.000	5/1	3000	2500	4500	2.0	8.0	–	1.6	7.0
750	3.6	3.6	25	3.8	P231_0040KX301_0010 MF EZ301U	11	–	51	4.000	4/1	3000	2500	4500	1.2	8.5	–	1.5	4.5
750	6.1	6.4	43	2.2	P231_0040KX301_0010 MF EZ302U	19	–	51	4.000	4/1	3000	2500	4500	1.3	8.5	–	1.5	5.1
750	7.9	8.4	56	1.7	P231_0040KX301_0010 MF EZ303U	25	–	51	4.000	4/1	3000	2500	4500	1.5	8.5	–	1.5	5.6
750	11	11	76	1.3	P231_0040KX301_0010 MF EZ401U	25	–	51	4.000	4/1	3000	2500	4500	2.0	8.5	–	1.5	7.0
P231KX (n_{1N} = 6000 min^{-1}, $M_{2acc,max}$ = 25 Nm)																		
400	13	14	35	1.2	P231_0050KX301_0030 MF EZ301U	25	–	51	15.00	15/1	3500	3500	6000	0.94	8.0	–	1.6	4.5
500	10	11	28	1.5	P231_0040KX301_0030 MF EZ301U	25	–	51	12.00	12/1	3500	3500	6000	0.94	8.5	–	1.5	4.5
P331KX (n_{1N} = 3000 min^{-1}, $M_{2acc,max}$ = 69 Nm)																		
100	27	27	31	1.4	P331_0100KX301_0030 MF EZ301U	60	60	120	30.00	30/1	3500	3500	6000	0.94	5.0	3.0	4.0	5.3
125	21	22	22	1.9	P331_0080KX301_0030 MF EZ301U	63	64	126	24.00	24/1	3500	3500	6000	0.94	5.5	3.5	4.1	5.3
125	36	39	38	1.1	P331_0080KX301_0030 MF EZ302U	63	65	126	24.00	24/1	3500	3500	6000	1.0	5.5	3.5	4.1	5.9
143	19	19	17	2.4	P331_0070KX301_0030 MF EZ301U	56	56	138	21.00	21/1	3500	3500	6000	0.94	5.5	3.5	4.2	5.3
143	32	34	30	1.4	P331_0070KX301_0030 MF EZ302U	69	75	138	21.00	21/1	3500	3500	6000	1.0	5.5	3.5	4.2	5.9
143	42	44	39	1.1	P331_0070KX301_0030 MF EZ303U	69	75	138	21.00	21/1	3500	3500	6000	1.1	5.5	3.5	4.2	6.4
150	18	18	28	2.0	P331_0100KX301_0020 MF EZ301U	54	54	120	20.00	20/1	3500	3000	5500	1.0	5.0	3.0	4.0	5.3
150	30	32	48	1.2	P331_0100KX301_0020 MF EZ302U	60	60	120	20.00	20/1	3500	3000	5500	1.1	5.0	3.0	4.0	5.9
188	14	15	20	2.8	P331_0080KX301_0020 MF EZ301U	43	43	126	16.00	16/1	3500	3000	5500	1.0	5.5	3.5	4.1	5.3
188	24	26	35	1.6	P331_0080KX301_0020 MF EZ302U	63	65	126	16.00	16/1	3500	3000	5500	1.1	5.5	3.5	4.1	5.9
188	32	33	45	1.3	P331_0080KX301_0020 MF EZ303U	63	65	126	16.00	16/1	3500	3000	5500	1.2	5.5	3.5	4.1	6.4
200	13	14	13	3.2	P331_0050KX301_0030 MF EZ301U	40	40	129	15.00	15/1	3500	3500	6000	0.94	6.0	4.0	3.8	5.3
200	23	24	23	1.9	P331_0050KX301_0030 MF EZ302U	63	63	129	15.00	15/1	3500	3500	6000	1.0	6.0	4.0	3.8	5.9
200	30	31	29	1.4	P331_0050KX301_0030 MF EZ303U	63	63	129	15.00	15/1	3500	3500	6000	1.2	6.0	4.0	3.8	6.4
200	40	43	40	1.1	P331_0050KX301_0030 MF EZ401U	63	63	129	15.00	15/1	3500	3500	6000	1.7	6.0	4.0	3.8	7.8
214	12	13	16	3.6	P331_0070KX301_0020 MF EZ301U	37	37	138	14.00	14/1	3500	3000	5500	1.0	5.5	3.5	4.2	5.3
214	21	22	27	2.1	P331_0070KX301_0020 MF EZ302U	67	67	138	14.00	14/1	3500	3000	5500	1.1	5.5	3.5	4.2	5.9
214	28	29	35	1.6	P331_0070KX301_0020 MF EZ303U	69	75	138	14.00	14/1	3500	3000	5500	1.2	5.5	3.5	4.2	6.4
214	37	40	48	1.2	P331_0070KX301_0020 MF EZ401U	69	75	138	14.00	14/1	3500	3000	5500	1.7	5.5	3.5	4.2	7.8
250	11	11	13	3.2	P331_0040KX301_0030 MF EZ301U	32	32	103	12.00	12/1	3500	3500	6000	0.95	6.5	4.5	3.3	5.3
250	18	19	23	1.9	P331_0040KX301_0030 MF EZ302U	50	50	103	12.00	12/1	3500	3500	6000	1.0	6.5	4.5	3.3	5.9
250	24	25	29	1.4	P331_0040KX301_0030 MF EZ303U	50	50	103	12.00	12/1	3500	3500	6000	1.2	6.5	4.5	3.3	6.4
250	32	34	40	1.1	P331_0040KX301_0030 MF EZ401U	50	50	103	12.00	12/1	3500	3500	6000	1.7	6.5	4.5	3.3	7.8
300	8.9	9.1	12	4.8	P331_0050KX301_0020 MF EZ301U	27	27	129	10.00	10/1	3500	3000	5500	1.0	6.0	4.0	3.8	5.3
300	15	16	20	2.8	P331_0050KX301_0020 MF EZ302U	48	48	129	10.00	10/1	3500	3000	5500	1.1	6.0	4.0	3.8	5.9
300	20	21	27	2.1	P331_0050KX301_0020 MF EZ303U	63	63	129	10.00	10/1	3500	3000	5500	1.2	6.0	4.0	3.8	6.4
300	27	29	36	1.6	P331_0050KX301_0020 MF EZ401U	63	63	129	10.00	10/1	3500	3000	5500	1.8	6.0	4.0	3.8	7.8
375	7.1	7.3	12	4.8	P331_0040KX301_0020 MF EZ301U	21	21	103	8.000	8/1	3500	3000	5500	1.0	6.5	4.5	3.3	5.3

n_{2N} [rpm]	M_{2N} [Nm]	$M_{2,0}$ [Nm]	a_{th}	S	Type	M_{2acc} [Nm]	M_{2accHT} [Nm]	M_{2NOT} [Nm]	i	i_{exakt}	n_{1maxDB} EL1,2,5,6 [rpm]	n_{1maxDB} EL3,4 [rpm]	n_{1maxZB} [rpm]	J_1 [kgcm²]	$\Delta\varphi_2$ [arcmin]	$\Delta\varphi_{2red}$ [arcmin]	C_2 [Nm/arcmin]	m [kg]
P331KX (n_{1N} = 3000 min^{-1}, $M_{2acc,max}$ = 69 Nm)																		
375	12	13	20	2.8	P331_0040KX301_0020 MF EZ302U	38	38	103	8.000	8/1	3500	3000	5500	1.1	6.5	4.5	3.3	5.9
375	16	17	27	2.1	P331_0040KX301_0020 MF EZ303U	50	50	103	8.000	8/1	3500	3000	5500	1.2	6.5	4.5	3.3	6.4
375	21	23	36	1.6	P331_0040KX301_0020 MF EZ401U	50	50	103	8.000	8/1	3500	3000	5500	1.8	6.5	4.5	3.3	7.8
429	11	11	26	3.7	P331_0070KX301_0010 MF EZ302U	33	33	138	7.000	7/1	3000	2500	4500	1.3	5.5	3.5	4.2	5.9
429	14	15	34	2.8	P331_0070KX301_0010 MF EZ303U	47	47	138	7.000	7/1	3000	2500	4500	1.4	5.5	3.5	4.2	6.4
429	19	20	46	2.1	P331_0070KX301_0010 MF EZ401U	57	57	138	7.000	7/1	3000	2500	4500	2.0	5.5	3.5	4.2	7.8
429	31	35	77	1.3	P331_0070KX301_0010 MF EZ402U	69	75	138	7.000	7/1	3000	2500	4500	2.7	5.5	3.5	4.2	8.9
500	5.3	5.4	12	4.8	P331_0030KX301_0020 MF EZ301U	16	16	77	6.000	6/1	3500	3000	5500	1.1	7.5	5.5	2.4	5.3
500	9.1	9.6	20	2.8	P331_0030KX301_0020 MF EZ302U	29	29	77	6.000	6/1	3500	3000	5500	1.2	7.5	5.5	2.4	5.9
500	12	13	27	2.1	P331_0030KX301_0020 MF EZ303U	38	38	77	6.000	6/1	3500	3000	5500	1.3	7.5	5.5	2.4	6.4
500	16	17	36	1.6	P331_0030KX301_0020 MF EZ401U	38	38	77	6.000	6/1	3500	3000	5500	1.8	7.5	5.5	2.4	7.8
600	9.9	10	24	4.0	P331_0050KX301_0010 MF EZ303U	33	33	113	5.000	5/1	3000	2500	4500	1.5	6.0	4.0	3.8	6.4
600	13	14	33	2.9	P331_0050KX301_0010 MF EZ401U	41	41	113	5.000	5/1	3000	2500	4500	2.0	6.0	4.0	3.8	7.8
600	22	25	55	1.8	P331_0050KX301_0010 MF EZ402U	63	63	113	5.000	5/1	3000	2500	4500	2.7	6.0	4.0	3.8	8.9
600	33	41	80	1.2	P331_0050KX301_0010 MF EZ404U	63	63	113	5.000	5/1	3000	2500	4500	4.1	6.0	4.0	3.8	11
750	7.9	8.4	22	4.3	P331_0040KX301_0010 MF EZ303U	27	27	91	4.000	4/1	3000	2500	4500	1.5	6.5	4.5	3.3	6.4
750	11	11	30	3.2	P331_0040KX301_0010 MF EZ401U	32	32	91	4.000	4/1	3000	2500	4500	2.1	6.5	4.5	3.3	7.8
750	18	20	51	1.9	P331_0040KX301_0010 MF EZ402U	50	50	91	4.000	4/1	3000	2500	4500	2.8	6.5	4.5	3.3	8.9
750	26	33	75	1.3	P331_0040KX301_0010 MF EZ404U	50	50	91	4.000	4/1	3000	2500	4500	4.1	6.5	4.5	3.3	11
1000	5.9	6.3	22	4.3	P331_0030KX301_0010 MF EZ303U	20	20	68	3.000	3/1	3000	2500	4500	1.7	7.5	5.5	2.4	6.4
1000	8.0	8.6	30	3.2	P331_0030KX301_0010 MF EZ401U	24	24	68	3.000	3/1	3000	2500	4500	2.2	7.5	5.5	2.4	7.8
1000	13	15	51	1.9	P331_0030KX301_0010 MF EZ402U	38	38	68	3.000	3/1	3000	2500	4500	2.9	7.5	5.5	2.4	8.9
1000	20	25	75	1.3	P331_0030KX301_0010 MF EZ404U	38	38	68	3.000	3/1	3000	2500	4500	4.3	7.5	5.5	2.4	11
P331KX (n_{1N} = 6000 min^{-1}, $M_{2acc,max}$ = 69 Nm)																		
200	26	27	33	1.3	P331_0100KX301_0030 MF EZ301U	60	60	120	30.00	30/1	3500	3500	6000	0.94	5.0	3.0	4.0	5.3
250	20	22	21	2.0	P331_0080KX301_0030 MF EZ301U	63	64	126	24.00	24/1	3500	3500	6000	0.94	5.5	3.5	4.1	5.3
250	34	39	36	1.2	P331_0080KX301_0030 MF EZ302U	63	65	126	24.00	24/1	3500	3500	6000	1.0	5.5	3.5	4.1	5.9
286	18	19	17	2.5	P331_0070KX301_0030 MF EZ301U	56	56	138	21.00	21/1	3500	3500	6000	0.94	5.5	3.5	4.2	5.3
286	30	34	28	1.5	P331_0070KX301_0030 MF EZ302U	69	75	138	21.00	21/1	3500	3500	6000	1.0	5.5	3.5	4.2	5.9
286	39	45	37	1.1	P331_0070KX301_0030 MF EZ303U	69	75	138	21.00	21/1	3500	3500	6000	1.1	5.5	3.5	4.2	6.4
400	13	14	16	2.6	P331_0050KX301_0030 MF EZ301U	40	40	129	15.00	15/1	3500	3500	6000	0.94	6.0	4.0	3.8	5.3
400	21	24	27	1.6	P331_0050KX301_0030 MF EZ302U	63	63	129	15.00	15/1	3500	3500	6000	1.0	6.0	4.0	3.8	5.9
400	28	32	35	1.2	P331_0050KX301_0030 MF EZ303U	63	63	129	15.00	15/1	3500	3500	6000	1.2	6.0	4.0	3.8	6.4
400	33	40	41	1.0	P331_0050KX301_0030 MF EZ401U	63	63	129	15.00	15/1	3500	3500	6000	1.7	6.0	4.0	3.8	7.8
500	10	11	16	2.6	P331_0040KX301_0030 MF EZ301U	32	32	103	12.00	12/1	3500	3500	6000	0.95	6.5	4.5	3.3	5.3
500	17	19	27	1.6	P331_0040KX301_0030 MF EZ302U	50	50	103	12.00	12/1	3500	3500	6000	1.0	6.5	4.5	3.3	5.9
500	22	26	35	1.2	P331_0040KX301_0030 MF EZ303U	50	50	103	12.00	12/1	3500	3500	6000	1.2	6.5	4.5	3.3	6.4
500	26	32	41	1.0	P331_0040KX301_0030 MF EZ401U	50	50	103	12.00	12/1	3500	3500	6000	1.7	6.5	4.5	3.3	7.8
P332KX (n_{1N} = 3000 min^{-1}, $M_{2acc,max}$ = 75 Nm)																		
60	44	44	50	1.1	P332_0250KX301_0020 MF EZ301U	75	75	150	50.00	50/1	3500	3000	5500	1.0	5.5	3.5	5.1	5.6
75	35	36	40	1.4	P332_0200KX301_0020 MF EZ301U	75	75	150	40.00	40/1	3500	3000	5500	1.0	5.5	3.5	5.1	5.6
86	30	31	58	1.6	P332_0350KX301_0010 MF EZ301U	75	75	150	35.00	35/1	3000	2500	4500	1.2	5.5	3.5	5.2	5.6
94	28	28	35	1.6	P332_0160KX301_0020 MF EZ301U	65	65	130	32.00	32/1	3500	3000	5500	1.0	5.5	3.5	5.0	5.6
P332KX (n_{1N} = 6000 min^{-1}, $M_{2acc,max}$ = 75 Nm)																		
100	50	53	42	1.0	P332_0200KX301_0030 MF EZ301U	75	75	150	60.00	60/1	3500	3500	6000	0.94	5.5	3.5	5.1	5.6
P431KX (n_{1N} = 3000 min^{-1}, $M_{2acc,max}$ = 140 Nm)																		
100	27	27	17	2.8	P431_0100KX401_0030 MF EZ301U	80	80	230	30.00	30/1	3000	3000	5500	1.6	5.0	3.0	8.4	8.9
100	46	48	29	1.6	P431_0100KX401_0030 MF EZ302U	115	115	230	30.00	30/1	3000	3000	5500	1.7	5.0	3.0	8.4	9.5
100	59	63	37	1.3	P431_0100KX401_0030 MF EZ303U	115	115	230	30.00	30/1	3000	3000	5500	1.8	5.0	3.0	8.4	10
125	21	22	13	3.8	P431_0080KX401_0030 MF EZ301U	64	64	239	24.00	24/1	3000	3000	5500	1.6	5.5	3.5	8.5	8.9
125	36	39	22	2.2	P431_0080KX401_0030 MF EZ302U	115	115	239	24.00	24/1	3000	3000	5500	1.7	5.5	3.5	8.5	9.5
125	47	50	28	1.7	P431_0080KX401_0030 MF EZ303U	120	125	239	24.00	24/1	3000	3000	5500	1.8	5.5	3.5	8.5	10
125	64	69	38	1.2	P431_0080KX401_0030 MF EZ401U	120	125	239	24.00	24/1	3000	3000	5500	2.4	5.5	3.5	8.5	11
143	19	19	9.8	4.8	P431_0070KX401_0030 MF EZ301U	56	56	271	21.00	21/1	3000	3000	5500	1.6	5.5	3.5	9.2	8.9
143	32	34	17	2.8	P431_0070KX401_0030 MF EZ302U	100	100	271	21.00	21/1	3000	3000	5500	1.7	5.5	3.5	9.2	9.5
143	42	44	22	2.2	P431_0070KX401_0030 MF EZ303U	135	140	271	21.00	21/1	3000	3000	5500	1.8	5.5	3.5	9.2	10
143	56	60	30	1.6	P431_0070KX401_0030 MF EZ401U	135	143	271	21.00	21/1	3000	3000	5500	2.4	5.5	3.5	9.2	11
143	86	94	45	1.0	P431_0070KX401_0030 MF EZ501U	135	143	271	21.00	21/1	3000	3000	5500	4.3	5.5	3.5	9.2	12
150	18	18	15	4.2	P431_0100KX401_0020 MF EZ301U	54	54	230	20.00	20/1	2500	2500	5000	1.8	5.0	3.0	8.4	8.9
150	30	32	26	2.5	P431_0100KX401_0020 MF EZ302U	96	96	230	20.00	20/1	2500	2500	5000	1.9	5.0	3.0	8.4	9.5
150	40	42	34	1.9	P431_0100KX401_0020 MF EZ303U	115	115	230	20.00	20/1	2500	2500	5000	2.0	5.0	3.0	8.4	10
150	54	57	46	1.4	P431_0100KX401_0020 MF EZ401U	115	115	230	20.00	20/1	2500	2500	5000	2.6	5.0	3.0	8.4	11
188	24	26	20	3.3	P431_0080KX401_0020 MF EZ302U	76	76	239	16.00	16/1	2500	2500	5000	1.9	5.5	3.5	8.5	9.5

n_{2N} [rpm]	M_{2N} [Nm]	$M_{2,0}$ [Nm]	a_{th}	S	Type	M_{2acc} [Nm]	M_{2accHT} [Nm]	M_{2NOT} [Nm]	i	i_{exakt}	n_{1maxDB} EL1,2,5,6 [rpm]	n_{1maxDB} EL3,4 [rpm]	n_{1maxZB} [rpm]	J_1 [kgcm²]	$\Delta\varphi_2$ [arcmin]	$\Delta\varphi_{2red}$ [arcmin]	C_2 [Nm/ arcmin]	m [kg]
P431KX (n_{1N} = 3000 min^{-1}, $M_{2acc,max}$ = 140 Nm)																		
188	32	33	25	2.5	P431_0080KX401_0020 MF EZ303U	107	107	239	16.00	16/1	2500	2500	5000	2.0	5.5	3.5	8.5	10
188	43	46	34	1.9	P431_0080KX401_0020 MF EZ401U	120	125	239	16.00	16/1	2500	2500	5000	2.6	5.5	3.5	8.5	11
188	66	72	53	1.2	P431_0080KX401_0020 MF EZ501U	120	125	239	16.00	16/1	2500	2500	5000	4.5	5.5	3.5	8.5	12
188	72	79	58	1.1	P431_0080KX401_0020 MF EZ402U	120	125	239	16.00	16/1	2500	2500	5000	3.3	5.5	3.5	8.5	12
200	23	24	13	3.7	P431_0050KX401_0030 MF EZ302U	72	72	258	15.00	15/1	3000	3000	5500	1.7	6.0	4.0	8.6	9.5
200	30	31	17	2.9	P431_0050KX401_0030 MF EZ303U	100	100	258	15.00	15/1	3000	3000	5500	1.9	6.0	4.0	8.6	10
200	40	43	22	2.1	P431_0050KX401_0030 MF EZ401U	121	121	258	15.00	15/1	3000	3000	5500	2.4	6.0	4.0	8.6	11
200	62	67	34	1.4	P431_0050KX401_0030 MF EZ501U	121	121	258	15.00	15/1	3000	3000	5500	4.4	6.0	4.0	8.6	12
200	67	75	38	1.3	P431_0050KX401_0030 MF EZ402U	121	121	258	15.00	15/1	3000	3000	5500	3.1	6.0	4.0	8.6	12
214	21	22	15	4.2	P431_0070KX401_0020 MF EZ302U	67	67	271	14.00	14/1	2500	2500	5000	1.9	5.5	3.5	9.2	9.5
214	28	29	20	3.3	P431_0070KX401_0020 MF EZ303U	94	94	271	14.00	14/1	2500	2500	5000	2.0	5.5	3.5	9.2	10
214	37	40	27	2.4	P431_0070KX401_0020 MF EZ401U	114	114	271	14.00	14/1	2500	2500	5000	2.6	5.5	3.5	9.2	11
214	58	63	41	1.6	P431_0070KX401_0020 MF EZ501U	135	143	271	14.00	14/1	2500	2500	5000	4.5	5.5	3.5	9.2	12
214	63	70	45	1.4	P431_0070KX401_0020 MF EZ402U	135	143	271	14.00	14/1	2500	2500	5000	3.3	5.5	3.5	9.2	12
250	18	19	13	3.7	P431_0040KX401_0030 MF EZ302U	57	57	206	12.00	12/1	3000	3000	5500	1.8	6.5	4.5	7.3	9.5
250	24	25	17	2.9	P431_0040KX401_0030 MF EZ303U	80	80	206	12.00	12/1	3000	3000	5500	1.9	6.5	4.5	7.3	10
250	32	34	22	2.1	P431_0040KX401_0030 MF EZ401U	97	97	206	12.00	12/1	3000	3000	5500	2.4	6.5	4.5	7.3	11
250	49	54	34	1.4	P431_0040KX401_0030 MF EZ501U	97	97	206	12.00	12/1	3000	3000	5500	4.4	6.5	4.5	7.3	12
250	54	60	38	1.3	P431_0040KX401_0030 MF EZ402U	97	97	206	12.00	12/1	3000	3000	5500	3.1	6.5	4.5	7.3	12
300	20	21	15	4.3	P431_0050KX401_0020 MF EZ303U	67	67	258	10.00	10/1	2500	2500	5000	2.1	6.0	4.0	8.6	10
300	27	29	20	3.2	P431_0050KX401_0020 MF EZ401U	81	81	258	10.00	10/1	2500	2500	5000	2.6	6.0	4.0	8.6	11
300	41	45	31	2.1	P431_0050KX401_0020 MF EZ501U	121	121	258	10.00	10/1	2500	2500	5000	4.6	6.0	4.0	8.6	12
300	45	50	34	1.9	P431_0050KX401_0020 MF EZ402U	121	121	258	10.00	10/1	2500	2500	5000	3.3	6.0	4.0	8.6	12
300	66	82	50	1.3	P431_0050KX401_0020 MF EZ404U	121	121	258	10.00	10/1	2500	2500	5000	4.7	6.0	4.0	8.6	15
300	71	76	54	1.2	P431_0050KX401_0020 MF EZ502U	121	121	258	10.00	10/1	2500	2500	5000	6.9	6.0	4.0	8.6	14
300	71	79	54	1.2	P431_0050KX401_0020 MF EZ701U	121	121	258	10.00	10/1	2500	2500	5000	10	6.0	4.0	8.6	16
375	16	17	15	4.3	P431_0040KX401_0020 MF EZ303U	54	54	206	8.000	8/1	2500	2500	5000	2.1	6.5	4.5	7.3	10
375	21	23	20	3.2	P431_0040KX401_0020 MF EZ401U	65	65	206	8.000	8/1	2500	2500	5000	2.6	6.5	4.5	7.3	11
375	33	36	31	2.1	P431_0040KX401_0020 MF EZ501U	97	97	206	8.000	8/1	2500	2500	5000	4.6	6.5	4.5	7.3	12
375	36	40	34	1.9	P431_0040KX401_0020 MF EZ402U	97	97	206	8.000	8/1	2500	2500	5000	3.3	6.5	4.5	7.3	12
375	53	66	50	1.3	P431_0040KX401_0020 MF EZ404U	97	97	206	8.000	8/1	2500	2500	5000	4.7	6.5	4.5	7.3	15
375	57	61	54	1.2	P431_0040KX401_0020 MF EZ502U	97	97	206	8.000	8/1	2500	2500	5000	6.9	6.5	4.5	7.3	14
375	57	63	54	1.2	P431_0040KX401_0020 MF EZ701U	97	97	206	8.000	8/1	2500	2500	5000	10	6.5	4.5	7.3	16
429	19	20	27	4.0	P431_0070KX401_0010 MF EZ401U	57	57	271	7.000	7/1	2500	2000	4000	3.4	5.5	3.5	9.2	11
429	29	31	42	2.6	P431_0070KX401_0010 MF EZ501U	107	107	271	7.000	7/1	2500	2000	4000	5.3	5.5	3.5	9.2	12
429	31	35	46	2.4	P431_0070KX401_0010 MF EZ402U	107	107	271	7.000	7/1	2500	2000	4000	4.1	5.5	3.5	9.2	12
429	46	58	67	1.6	P431_0070KX401_0010 MF EZ404U	135	143	271	7.000	7/1	2500	2000	4000	5.4	5.5	3.5	9.2	15
429	49	54	72	1.5	P431_0070KX401_0010 MF EZ502U	135	143	271	7.000	7/1	2500	2000	4000	7.6	5.5	3.5	9.2	14
429	49	56	72	1.5	P431_0070KX401_0010 MF EZ701U	134	134	271	7.000	7/1	2500	2000	4000	11	5.5	3.5	9.2	16
429	65	74	94	1.1	P431_0070KX401_0010 MF EZ503U	135	143	271	7.000	7/1	2500	2000	4000	10	5.5	3.5	9.2	15
500	12	13	15	4.2	P431_0030KX401_0020 MF EZ303U	40	40	155	6.000	6/1	2500	2500	5000	2.2	7.5	5.5	5.3	10
500	16	17	21	3.1	P431_0030KX401_0020 MF EZ401U	49	49	155	6.000	6/1	2500	2500	5000	2.7	7.5	5.5	5.3	11
500	25	27	32	2.0	P431_0030KX401_0020 MF EZ501U	73	73	155	6.000	6/1	2500	2500	5000	4.7	7.5	5.5	5.3	12
500	27	30	35	1.9	P431_0030KX401_0020 MF EZ402U	73	73	155	6.000	6/1	2500	2500	5000	3.4	7.5	5.5	5.3	12
500	40	49	51	1.3	P431_0030KX401_0020 MF EZ404U	73	73	155	6.000	6/1	2500	2500	5000	4.8	7.5	5.5	5.3	15
500	42	46	54	1.2	P431_0030KX401_0020 MF EZ502U	73	73	155	6.000	6/1	2500	2500	5000	7.0	7.5	5.5	5.3	14
500	42	48	54	1.2	P431_0030KX401_0020 MF EZ701U	73	73	155	6.000	6/1	2500	2500	5000	10	7.5	5.5	5.3	16
600	21	22	30	3.6	P431_0050KX401_0010 MF EZ501U	76	76	258	5.000	5/1	2500	2000	4000	5.5	6.0	4.0	8.6	12
600	22	25	33	3.3	P431_0050KX401_0010 MF EZ402U	76	76	258	5.000	5/1	2500	2000	4000	4.2	6.0	4.0	8.6	12
600	33	41	48	2.3	P431_0050KX401_0010 MF EZ404U	121	121	258	5.000	5/1	2500	2000	4000	5.6	6.0	4.0	8.6	15
600	35	38	51	2.1	P431_0050KX401_0010 MF EZ502U	121	121	258	5.000	5/1	2500	2000	4000	7.8	6.0	4.0	8.6	14
600	35	40	51	2.1	P431_0050KX401_0010 MF EZ701U	96	96	258	5.000	5/1	2500	2000	4000	11	6.0	4.0	8.6	16
600	46	53	67	1.6	P431_0050KX401_0010 MF EZ503U	121	121	258	5.000	5/1	2500	2000	4000	10	6.0	4.0	8.6	15
600	57	69	83	1.3	P431_0050KX401_0010 MF EZ702U	121	121	258	5.000	5/1	2500	2000	4000	16	6.0	4.0	8.6	18
600	64	76	94	1.2	P431_0050KX401_0010 MF EZ505U	121	121	258	5.000	5/1	2500	2000	4000	15	6.0	4.0	8.6	18
750	16	18	26	4.1	P431_0040KX401_0010 MF EZ501U	61	61	206	4.000	4/1	2500	2000	4000	5.6	6.5	4.5	7.3	12
750	18	20	29	3.8	P431_0040KX401_0010 MF EZ402U	61	61	206	4.000	4/1	2500	2000	4000	4.3	6.5	4.5	7.3	12
750	26	33	42	2.6	P431_0040KX401_0010 MF EZ404U	97	97	206	4.000	4/1	2500	2000	4000	5.7	6.5	4.5	7.3	15
750	28	31	45	2.4	P431_0040KX401_0010 MF EZ502U	97	97	206	4.000	4/1	2500	2000	4000	7.9	6.5	4.5	7.3	14
750	28	32	45	2.4	P431_0040KX401_0010 MF EZ701U	76	76	206	4.000	4/1	2500	2000	4000	11	6.5	4.5	7.3	16
750	37	42	59	1.8	P431_0040KX401_0010 MF EZ503U	97	97	206	4.000	4/1	2500	2000	4000	10	6.5	4.5	7.3	15
750	46	55	73	1.5	P431_0040KX401_0010 MF EZ702U	97	97	206	4.000	4/1	2500	2000	4000	16	6.5	4.5	7.3	18
750	52	61	82	1.3	P431_0040KX401_0010 MF EZ505U	97	97	206	4.000	4/1	2500	2000	4000	15	6.5	4.5	7.3	18
750	63	79	100	1.1	P431_0040KX401_0010 MF EZ703U	97	97	206	4.000	4/1	2500	2000	4000	24	6.5	4.5	7.3	20

n_{2N} [rpm]	M_{2N} [Nm]	$M_{2,0}$ [Nm]	a_{th}	S	Type	M_{2acc} [Nm]	M_{2accHT} [Nm]	M_{2NOT} [Nm]	i	i_{exakt}	n_{1maxDB} EL1,2,5,6 [rpm]	n_{1maxDB} EL3,4 [rpm]	n_{1maxZB} [rpm]	J_1 [kgcm²]	$\Delta\varphi_2$ [arcmin]	$\Delta\varphi_{2red}$ [arcmin]	C_2 [Nm/arcmin]	m [kg]
P431KX (n_{1N} = 3000 min^{-1}, $M_{2acc,max}$ = 140 Nm)																		
1000	12	13	30	3.5	P431_0030KX401_0010 MF EZ501U	46	46	155	3.000	3/1	2500	2000	4000	6.0	7.5	5.5	5.3	12
1000	13	15	33	3.2	P431_0030KX401_0010 MF EZ402U	46	46	155	3.000	3/1	2500	2000	4000	4.8	7.5	5.5	5.3	12
1000	20	25	49	2.2	P431_0030KX401_0010 MF EZ404U	73	73	155	3.000	3/1	2500	2000	4000	6.1	7.5	5.5	5.3	15
1000	21	23	52	2.1	P431_0030KX401_0010 MF EZ502U	73	73	155	3.000	3/1	2500	2000	4000	8.3	7.5	5.5	5.3	14
1000	21	24	52	2.1	P431_0030KX401_0010 MF EZ701U	57	57	155	3.000	3/1	2500	2000	4000	12	7.5	5.5	5.3	16
1000	28	32	69	1.6	P431_0030KX401_0010 MF EZ503U	73	73	155	3.000	3/1	2500	2000	4000	11	7.5	5.5	5.3	15
1000	34	41	85	1.3	P431_0030KX401_0010 MF EZ702U	73	73	155	3.000	3/1	2500	2000	4000	17	7.5	5.5	5.3	18
1000	39	46	96	1.1	P431_0030KX401_0010 MF EZ505U	73	73	155	3.000	3/1	2500	2000	4000	15	7.5	5.5	5.3	18
P432KX (n_{1N} = 3000 min^{-1}, $M_{2acc,max}$ = 130 Nm)																		
29	91	93	38	1.1	P432_0350KX301_0030 MF EZ301U	133	138	266	105.0	105/1	3500	3500	6000	0.94	5.5	3.5	12	7.6
30	87	89	49	1.2	P432_0500KX301_0020 MF EZ301U	132	138	264	100.0	100/1	3500	3000	5500	1.0	5.0	3.0	12	7.6
36	73	75	32	1.3	P432_0280KX301_0030 MF EZ301U	130	130	260	84.00	84/1	3500	3500	6000	0.94	5.5	3.5	12	7.6
38	70	71	46	1.3	P432_0400KX301_0020 MF EZ301U	130	130	260	80.00	80/1	3500	3000	5500	1.0	5.5	3.5	12	7.6
40	65	67	27	1.5	P432_0250KX301_0030 MF EZ301U	134	139	268	75.00	75/1	3500	3500	6000	0.94	5.5	3.5	12	7.6
43	61	62	34	1.7	P432_0350KX301_0020 MF EZ301U	133	138	266	70.00	70/1	3500	3000	5500	1.0	5.5	3.5	12	7.6
47	56	57	35	1.6	P432_0320KX301_0020 MF EZ301U	126	131	253	64.00	64/1	3500	3000	5500	1.0	5.5	3.5	9.4	7.6
50	52	53	23	1.8	P432_0200KX301_0030 MF EZ301U	134	139	268	60.00	60/1	3500	3500	6000	0.95	5.5	3.5	12	7.6
50	89	94	40	1.1	P432_0200KX301_0030 MF EZ302U	134	139	268	60.00	60/1	3500	3500	6000	1.0	5.5	3.5	12	8.2
54	49	50	29	1.9	P432_0280KX301_0020 MF EZ301U	130	130	260	56.00	56/1	3500	3000	5500	1.0	5.5	3.5	12	7.6
54	83	88	50	1.1	P432_0280KX301_0020 MF EZ302U	130	130	260	56.00	56/1	3500	3000	5500	1.1	5.5	3.5	12	8.2
60	44	44	25	2.3	P432_0250KX301_0020 MF EZ301U	131	131	268	50.00	50/1	3500	3000	5500	1.0	5.5	3.5	12	7.6
60	74	79	42	1.3	P432_0250KX301_0020 MF EZ302U	134	139	268	50.00	50/1	3500	3000	5500	1.1	5.5	3.5	12	8.2
60	97	102	55	1.0	P432_0250KX301_0020 MF EZ303U	134	139	268	50.00	50/1	3500	3000	5500	1.2	5.5	3.5	12	8.7
75	35	36	21	2.7	P432_0200KX301_0020 MF EZ301U	105	105	268	40.00	40/1	3500	3000	5500	1.0	5.5	3.5	12	7.6
75	60	63	36	1.6	P432_0200KX301_0020 MF EZ302U	134	139	268	40.00	40/1	3500	3000	5500	1.1	5.5	3.5	12	8.2
75	77	82	47	1.2	P432_0200KX301_0020 MF EZ303U	134	139	268	40.00	40/1	3500	3000	5500	1.2	5.5	3.5	12	8.7
86	30	31	29	3.4	P432_0350KX301_0010 MF EZ301U	92	92	266	35.00	35/1	3000	2500	4500	1.2	5.5	3.5	12	7.6
86	52	55	49	2.0	P432_0350KX301_0010 MF EZ302U	133	138	266	35.00	35/1	3000	2500	4500	1.3	5.5	3.5	12	8.2
86	68	72	64	1.5	P432_0350KX301_0010 MF EZ303U	133	138	266	35.00	35/1	3000	2500	4500	1.4	5.5	3.5	12	8.7
86	92	98	86	1.1	P432_0350KX301_0010 MF EZ401U	133	138	266	35.00	35/1	3000	2500	4500	2.0	5.5	3.5	12	10
94	28	28	18	3.2	P432_0160KX301_0020 MF EZ301U	84	84	260	32.00	32/1	3500	3000	5500	1.0	5.5	3.5	11	7.6
94	48	50	31	1.9	P432_0160KX301_0020 MF EZ302U	130	130	260	32.00	32/1	3500	3000	5500	1.1	5.5	3.5	11	8.2
94	62	66	40	1.4	P432_0160KX301_0020 MF EZ303U	130	130	260	32.00	32/1	3500	3000	5500	1.2	5.5	3.5	11	8.7
94	84	90	54	1.1	P432_0160KX301_0020 MF EZ401U	130	130	260	32.00	32/1	3500	3000	5500	1.8	5.5	3.5	11	10
P432KX (n_{1N} = 6000 min^{-1}, $M_{2acc,max}$ = 130 Nm)																		
57	87	93	36	1.2	P432_0350KX301_0030 MF EZ301U	133	138	266	105.0	105/1	3500	3500	6000	0.94	5.5	3.5	12	7.6
71	70	75	31	1.4	P432_0280KX301_0030 MF EZ301U	130	130	260	84.00	84/1	3500	3500	6000	0.94	5.5	3.5	12	7.6
80	62	67	26	1.6	P432_0250KX301_0030 MF EZ301U	134	139	268	75.00	75/1	3500	3500	6000	0.94	5.5	3.5	12	7.6
100	50	53	22	1.9	P432_0200KX301_0030 MF EZ301U	134	139	268	60.00	60/1	3500	3500	6000	0.95	5.5	3.5	12	7.6
100	84	94	37	1.1	P432_0200KX301_0030 MF EZ302U	134	139	268	60.00	60/1	3500	3500	6000	1.0	5.5	3.5	12	8.2
P531KX (n_{1N} = 3000 min^{-1}, $M_{2acc,max}$ = 330 Nm)																		
100	80	86	23	2.2	P531_0100KX501_0030 MF EZ401U	244	244	575	30.00	30/1	3000	3000	5000	5.7	4.0	2.0	24	17
100	123	135	36	1.5	P531_0100KX501_0030 MF EZ501U	288	288	575	30.00	30/1	3000	3000	5000	7.7	4.0	2.0	24	18
100	135	149	39	1.3	P531_0100KX501_0030 MF EZ402U	288	288	575	30.00	30/1	3000	3000	5000	6.4	4.0	2.0	24	18
125	64	69	17	3.1	P531_0080KX501_0030 MF EZ401U	195	195	592	24.00	24/1	3000	3000	5000	5.7	4.5	2.5	21	17
125	99	108	26	2.0	P531_0080KX501_0030 MF EZ501U	296	300	592	24.00	24/1	3000	3000	5000	7.7	4.5	2.5	21	18
125	108	119	28	1.9	P531_0080KX501_0030 MF EZ402U	296	300	592	24.00	24/1	3000	3000	5000	6.4	4.5	2.5	21	18
125	158	197	42	1.3	P531_0080KX501_0030 MF EZ404U	296	300	592	24.00	24/1	3000	3000	5000	7.8	4.5	2.5	21	20
125	170	183	45	1.2	P531_0080KX501_0030 MF EZ502U	296	300	592	24.00	24/1	3000	3000	5000	10	4.5	2.5	21	20
125	170	190	45	1.2	P531_0080KX501_0030 MF EZ701U	296	300	592	24.00	24/1	3000	3000	5000	13	4.5	2.5	21	21
143	56	60	14	3.7	P531_0070KX501_0030 MF EZ401U	171	171	667	21.00	21/1	3000	3000	5000	5.7	4.5	2.5	25	17
143	86	94	22	2.4	P531_0070KX501_0030 MF EZ501U	321	321	667	21.00	21/1	3000	3000	5000	7.7	4.5	2.5	25	18
143	94	104	24	2.2	P531_0070KX501_0030 MF EZ402U	321	321	667	21.00	21/1	3000	3000	5000	6.4	4.5	2.5	25	18
143	138	173	35	1.5	P531_0070KX501_0030 MF EZ404U	333	380	667	21.00	21/1	3000	3000	5000	7.8	4.5	2.5	25	20
143	148	161	37	1.4	P531_0070KX501_0030 MF EZ502U	333	380	667	21.00	21/1	3000	3000	5000	10	4.5	2.5	25	20
143	148	167	37	1.4	P531_0070KX501_0030 MF EZ701U	333	380	667	21.00	21/1	3000	3000	5000	13	4.5	2.5	25	21
143	195	223	49	1.1	P531_0070KX501_0030 MF EZ503U	333	380	667	21.00	21/1	3000	3000	5000	12	4.5	2.5	25	21
150	54	57	21	3.4	P531_0100KX501_0020 MF EZ401U	162	162	575	20.00	20/1	2500	2500	4500	6.2	4.0	2.0	24	17
150	82	90	33	2.2	P531_0100KX501_0020 MF EZ501U	288	288	575	20.00	20/1	2500	2500	4500	8.2	4.0	2.0	24	18
150	90	99	36	2.0	P531_0100KX501_0020 MF EZ402U	288	288	575	20.00	20/1	2500	2500	4500	6.9	4.0	2.0	24	18
150	132	164	52	1.4	P531_0100KX501_0020 MF EZ404U	288	288	575	20.00	20/1	2500	2500	4500	8.3	4.0	2.0	24	20
150	141	153	56	1.3	P531_0100KX501_0020 MF EZ502U	288	288	575	20.00	20/1	2500	2500	4500	11	4.0	2.0	24	20
150	141	159	56	1.3	P531_0100KX501_0020 MF EZ701U	288	288	575	20.00	20/1	2500	2500	4500	14	4.0	2.0	24	21

n_{2N} [rpm]	M_{2N} [Nm]	$M_{2,0}$ [Nm]	a_{th}	S	Type	M_{2acc} [Nm]	M_{2accHT} [Nm]	M_{2NOT} [Nm]	i	i_{exakt}	n_{1maxDB} EL1,2,5,6 [rpm]	n_{1maxDB} EL3,4 [rpm]	n_{1maxZB} [rpm]	J_1 [kgcm²]	$\Delta\varphi_2$ [arcmin]	$\Delta\varphi_{2red}$ [arcmin]	C_2 [Nm/ arcmin]	m [kg]
P531KX (n_{1N} = 3000 min^{-1}, $M_{2acc,max}$ = 330 Nm)																		
188	43	46	15	4.7	P531_0080KX501_0020 MF EZ401U	130	130	592	16.00	16/1	2500	2500	4500	6.3	4.5	2.5	21	17
188	66	72	23	3.0	P531_0080KX501_0020 MF EZ501U	245	245	592	16.00	16/1	2500	2500	4500	8.2	4.5	2.5	21	18
188	72	79	26	2.8	P531_0080KX501_0020 MF EZ402U	245	245	592	16.00	16/1	2500	2500	4500	7.0	4.5	2.5	21	18
188	105	131	38	1.9	P531_0080KX501_0020 MF EZ404U	296	300	592	16.00	16/1	2500	2500	4500	8.3	4.5	2.5	21	20
188	113	122	40	1.8	P531_0080KX501_0020 MF EZ502U	296	300	592	16.00	16/1	2500	2500	4500	11	4.5	2.5	21	20
188	113	127	40	1.8	P531_0080KX501_0020 MF EZ701U	296	300	592	16.00	16/1	2500	2500	4500	14	4.5	2.5	21	21
188	148	170	53	1.3	P531_0080KX501_0020 MF EZ503U	296	300	592	16.00	16/1	2500	2500	4500	13	4.5	2.5	21	21
188	183	220	65	1.1	P531_0080KX501_0020 MF EZ702U	296	300	592	16.00	16/1	2500	2500	4500	19	4.5	2.5	21	24
200	62	67	15	3.4	P531_0050KX501_0030 MF EZ501U	229	229	644	15.00	15/1	3000	3000	5000	7.8	5.0	3.0	22	18
200	67	75	17	3.1	P531_0050KX501_0030 MF EZ402U	229	229	644	15.00	15/1	3000	3000	5000	6.5	5.0	3.0	22	18
200	99	123	25	2.1	P531_0050KX501_0030 MF EZ404U	306	306	644	15.00	15/1	3000	3000	5000	7.8	5.0	3.0	22	20
200	106	115	26	2.0	P531_0050KX501_0030 MF EZ502U	306	306	644	15.00	15/1	3000	3000	5000	10	5.0	3.0	22	20
200	106	119	26	2.0	P531_0050KX501_0030 MF EZ701U	287	287	644	15.00	15/1	3000	3000	5000	13	5.0	3.0	22	21
200	139	159	35	1.5	P531_0050KX501_0030 MF EZ503U	306	306	644	15.00	15/1	3000	3000	5000	12	5.0	3.0	22	21
200	172	206	43	1.2	P531_0050KX501_0030 MF EZ702U	306	306	644	15.00	15/1	3000	3000	5000	19	5.0	3.0	22	24
200	193	229	48	1.1	P531_0050KX501_0030 MF EZ505U	306	306	644	15.00	15/1	3000	3000	5000	17	5.0	3.0	22	24
214	58	63	20	3.7	P531_0070KX501_0020 MF EZ501U	214	214	667	14.00	14/1	2500	2500	4500	8.3	4.5	2.5	25	18
214	63	70	21	3.3	P531_0070KX501_0020 MF EZ402U	214	214	667	14.00	14/1	2500	2500	4500	7.0	4.5	2.5	25	18
214	92	115	31	2.3	P531_0070KX501_0020 MF EZ404U	333	380	667	14.00	14/1	2500	2500	4500	8.3	4.5	2.5	25	20
214	99	107	34	2.1	P531_0070KX501_0020 MF EZ502U	333	380	667	14.00	14/1	2500	2500	4500	11	4.5	2.5	25	20
214	99	111	34	2.1	P531_0070KX501_0020 MF EZ701U	268	268	667	14.00	14/1	2500	2500	4500	14	4.5	2.5	25	21
214	130	148	44	1.6	P531_0070KX501_0020 MF EZ503U	333	380	667	14.00	14/1	2500	2500	4500	13	4.5	2.5	25	21
214	161	193	55	1.3	P531_0070KX501_0020 MF EZ702U	333	380	667	14.00	14/1	2500	2500	4500	19	4.5	2.5	25	24
214	181	214	61	1.2	P531_0070KX501_0020 MF EZ505U	333	380	667	14.00	14/1	2500	2500	4500	18	4.5	2.5	25	24
250	49	54	15	3.4	P531_0040KX501_0030 MF EZ501U	183	183	515	12.00	12/1	3000	3000	5000	7.8	5.5	3.5	18	18
250	54	60	17	3.1	P531_0040KX501_0030 MF EZ402U	183	183	515	12.00	12/1	3000	3000	5000	6.5	5.5	3.5	18	18
250	79	99	25	2.1	P531_0040KX501_0030 MF EZ404U	244	244	515	12.00	12/1	3000	3000	5000	7.9	5.5	3.5	18	20
250	85	92	26	2.0	P531_0040KX501_0030 MF EZ502U	244	244	515	12.00	12/1	3000	3000	5000	10	5.5	3.5	18	20
250	85	95	26	2.0	P531_0040KX501_0030 MF EZ701U	229	229	515	12.00	12/1	3000	3000	5000	13	5.5	3.5	18	21
250	111	127	35	1.5	P531_0040KX501_0030 MF EZ503U	244	244	515	12.00	12/1	3000	3000	5000	12	5.5	3.5	18	21
250	138	165	43	1.2	P531_0040KX501_0030 MF EZ702U	244	244	515	12.00	12/1	3000	3000	5000	19	5.5	3.5	18	24
250	155	183	48	1.1	P531_0040KX501_0030 MF EZ505U	244	244	515	12.00	12/1	3000	3000	5000	17	5.5	3.5	18	24
300	45	50	15	4.7	P531_0050KX501_0020 MF EZ402U	153	153	644	10.00	10/1	2500	2500	4500	7.1	5.0	3.0	22	18
300	66	82	22	3.2	P531_0050KX501_0020 MF EZ404U	277	277	644	10.00	10/1	2500	2500	4500	8.4	5.0	3.0	22	20
300	71	76	24	3.0	P531_0050KX501_0020 MF EZ502U	296	296	644	10.00	10/1	2500	2500	4500	11	5.0	3.0	22	20
300	71	79	24	3.0	P531_0050KX501_0020 MF EZ701U	191	191	644	10.00	10/1	2500	2500	4500	14	5.0	3.0	22	21
300	93	106	31	2.3	P531_0050KX501_0020 MF EZ503U	306	306	644	10.00	10/1	2500	2500	4500	13	5.0	3.0	22	21
300	115	138	39	1.8	P531_0050KX501_0020 MF EZ702U	306	306	644	10.00	10/1	2500	2500	4500	19	5.0	3.0	22	24
300	129	153	43	1.6	P531_0050KX501_0020 MF EZ505U	306	306	644	10.00	10/1	2500	2500	4500	18	5.0	3.0	22	24
300	158	199	53	1.3	P531_0050KX501_0020 MF EZ703U	306	306	644	10.00	10/1	2500	2500	4500	27	5.0	3.0	22	26
300	204	289	69	1.0	P531_0050KX501_0020 MF EZ705U	306	306	644	10.00	10/1	2500	2500	4500	39	5.0	3.0	22	31
375	36	40	15	4.7	P531_0040KX501_0020 MF EZ402U	122	122	515	8.000	8/1	2500	2500	4500	7.2	5.5	3.5	18	18
375	53	66	22	3.2	P531_0040KX501_0020 MF EZ404U	222	222	515	8.000	8/1	2500	2500	4500	8.5	5.5	3.5	18	20
375	57	61	24	3.0	P531_0040KX501_0020 MF EZ502U	237	237	515	8.000	8/1	2500	2500	4500	11	5.5	3.5	18	20
375	57	63	24	3.0	P531_0040KX501_0020 MF EZ701U	153	153	515	8.000	8/1	2500	2500	4500	14	5.5	3.5	18	21
375	74	85	31	2.3	P531_0040KX501_0020 MF EZ503U	244	244	515	8.000	8/1	2500	2500	4500	13	5.5	3.5	18	21
375	92	110	39	1.8	P531_0040KX501_0020 MF EZ702U	244	244	515	8.000	8/1	2500	2500	4500	19	5.5	3.5	18	24
375	103	122	43	1.6	P531_0040KX501_0020 MF EZ505U	244	244	515	8.000	8/1	2500	2500	4500	18	5.5	3.5	18	24
375	126	159	53	1.3	P531_0040KX501_0020 MF EZ703U	244	244	515	8.000	8/1	2500	2500	4500	27	5.5	3.5	18	26
375	163	231	69	1.0	P531_0040KX501_0020 MF EZ705U	244	244	515	8.000	8/1	2500	2500	4500	40	5.5	3.5	18	31
429	46	58	30	4.0	P531_0070KX501_0010 MF EZ404U	194	194	667	7.000	7/1	2500	2000	3500	11	4.5	2.5	25	20
429	49	54	32	3.7	P531_0070KX501_0010 MF EZ502U	207	207	667	7.000	7/1	2500	2000	3500	13	4.5	2.5	25	20
429	49	56	32	3.7	P531_0070KX501_0010 MF EZ701U	134	134	667	7.000	7/1	2500	2000	3500	16	4.5	2.5	25	21
429	65	74	42	2.8	P531_0070KX501_0010 MF EZ503U	288	288	667	7.000	7/1	2500	2000	3500	15	4.5	2.5	25	21
429	80	96	52	2.3	P531_0070KX501_0010 MF EZ702U	274	274	667	7.000	7/1	2500	2000	3500	22	4.5	2.5	25	24
429	90	107	59	2.0	P531_0070KX501_0010 MF EZ505U	333	380	667	7.000	7/1	2500	2000	3500	20	4.5	2.5	25	24
429	110	139	72	1.7	P531_0070KX501_0010 MF EZ703U	333	380	667	7.000	7/1	2500	2000	3500	29	4.5	2.5	25	26
429	142	202	93	1.3	P531_0070KX501_0010 MF EZ705U	333	380	667	7.000	7/1	2500	2000	3500	42	4.5	2.5	25	31
500	25	27	15	4.9	P531_0030KX501_0020 MF EZ501U	92	92	387	6.000	6/1	2500	2500	4500	8.9	6.5	4.5	13	18
500	27	30	16	4.5	P531_0030KX501_0020 MF EZ402U	92	92	387	6.000	6/1	2500	2500	4500	7.6	6.5	4.5	13	18
500	40	49	24	3.0	P531_0030KX501_0020 MF EZ404U	166	166	387	6.000	6/1	2500	2500	4500	8.9	6.5	4.5	13	20
500	42	46	25	2.8	P531_0030KX501_0020 MF EZ502U	178	178	387	6.000	6/1	2500	2500	4500	11	6.5	4.5	13	20
500	42	48	25	2.8	P531_0030KX501_0020 MF EZ701U	115	115	387	6.000	6/1	2500	2500	4500	14	6.5	4.5	13	21
500	56	64	33	2.2	P531_0030KX501_0020 MF EZ503U	183	183	387	6.000	6/1	2500	2500	4500	14	6.5	4.5	13	21

n_{2N} [rpm]	M_{2N} [Nm]	$M_{2,0}$ [Nm]	a_{th}	S	Type	M_{2acc} [Nm]	M_{2accHT} [Nm]	M_{2NOT} [Nm]	i	i_{exakt}	n_{1maxDB} EL1,2,5,6 [rpm]	n_{1maxDB} EL3,4 [rpm]	n_{1maxZB} [rpm]	J_1 [kgcm²]	$\Delta\varphi_2$ [arcmin]	$\Delta\varphi_{2red}$ [arcmin]	C_2 [Nm/arcmin]	m [kg]
P531KX (n_{1N} = 3000 min^{-1}, $M_{2acc,max}$ = 330 Nm)																		
500	69	83	41	1.7	P531_0030KX501_0020 MF EZ702U	183	183	387	6.000	6/1	2500	2500	4500	20	6.5	4.5	13	24
500	77	92	46	1.6	P531_0030KX501_0020 MF EZ505U	183	183	387	6.000	6/1	2500	2500	4500	18	6.5	4.5	13	24
500	95	119	56	1.3	P531_0030KX501_0020 MF EZ703U	183	183	387	6.000	6/1	2500	2500	4500	28	6.5	4.5	13	26
600	46	53	30	4.0	P531_0050KX501_0010 MF EZ503U	205	205	644	5.000	5/1	2500	2000	3500	16	5.0	3.0	22	21
600	57	69	38	3.2	P531_0050KX501_0010 MF EZ702U	196	196	644	5.000	5/1	2500	2000	3500	22	5.0	3.0	22	24
600	64	76	42	2.8	P531_0050KX501_0010 MF EZ505U	306	306	644	5.000	5/1	2500	2000	3500	20	5.0	3.0	22	24
600	79	99	52	2.3	P531_0050KX501_0010 MF EZ703U	306	306	644	5.000	5/1	2500	2000	3500	30	5.0	3.0	22	26
600	102	144	67	1.8	P531_0050KX501_0010 MF EZ705U	306	306	644	5.000	5/1	2500	2000	3500	42	5.0	3.0	22	31
750	37	42	26	4.6	P531_0040KX501_0010 MF EZ503U	164	164	515	4.000	4/1	2500	2000	3500	16	5.5	3.5	18	21
750	46	55	32	3.7	P531_0040KX501_0010 MF EZ702U	157	157	515	4.000	4/1	2500	2000	3500	22	5.5	3.5	18	24
750	52	61	37	3.3	P531_0040KX501_0010 MF EZ505U	244	244	515	4.000	4/1	2500	2000	3500	21	5.5	3.5	18	24
750	63	79	45	2.7	P531_0040KX501_0010 MF EZ703U	244	244	515	4.000	4/1	2500	2000	3500	30	5.5	3.5	18	26
750	81	115	58	2.1	P531_0040KX501_0010 MF EZ705U	244	244	515	4.000	4/1	2500	2000	3500	43	5.5	3.5	18	31
1000	21	23	24	4.9	P531_0030KX501_0010 MF EZ502U	89	89	387	3.000	3/1	2500	2000	3500	15	6.5	4.5	13	20
1000	21	24	24	4.9	P531_0030KX501_0010 MF EZ701U	57	57	387	3.000	3/1	2500	2000	3500	19	6.5	4.5	13	21
1000	28	32	32	3.8	P531_0030KX501_0010 MF EZ503U	123	123	387	3.000	3/1	2500	2000	3500	18	6.5	4.5	13	21
1000	34	41	39	3.0	P531_0030KX501_0010 MF EZ702U	118	118	387	3.000	3/1	2500	2000	3500	24	6.5	4.5	13	24
1000	39	46	44	2.7	P531_0030KX501_0010 MF EZ505U	183	183	387	3.000	3/1	2500	2000	3500	22	6.5	4.5	13	24
1000	47	60	54	2.2	P531_0030KX501_0010 MF EZ703U	183	183	387	3.000	3/1	2500	2000	3500	32	6.5	4.5	13	26
1000	61	87	70	1.7	P531_0030KX501_0010 MF EZ705U	183	183	387	3.000	3/1	2500	2000	3500	44	6.5	4.5	13	31
P531KX (n_{1N} = 4500 min^{-1}, $M_{2acc,max}$ = 330 Nm)																		
214	191	307	48	1.1	P531_0070KX501_0030 MF EZ505U	333	380	667	21.00	21/1	3000	3000	5000	17	4.5	2.5	25	24
281	145	234	54	1.3	P531_0080KX501_0020 MF EZ505U	296	300	592	16.00	16/1	2500	2500	4500	17	4.5	2.5	21	24
281	185	306	69	1.0	P531_0080KX501_0020 MF EZ703U	296	300	592	16.00	16/1	2500	2500	4500	27	4.5	2.5	21	26
300	136	219	39	1.4	P531_0050KX501_0030 MF EZ505U	306	306	644	15.00	15/1	3000	3000	5000	17	5.0	3.0	22	24
300	173	287	49	1.1	P531_0050KX501_0030 MF EZ703U	306	306	644	15.00	15/1	3000	3000	5000	26	5.0	3.0	22	26
321	127	205	45	1.6	P531_0070KX501_0020 MF EZ505U	333	380	667	14.00	14/1	2500	2500	4500	18	4.5	2.5	25	24
321	162	268	57	1.2	P531_0070KX501_0020 MF EZ703U	333	380	667	14.00	14/1	2500	2500	4500	27	4.5	2.5	25	26
375	109	175	39	1.4	P531_0040KX501_0030 MF EZ505U	244	244	515	12.00	12/1	3000	3000	5000	17	5.5	3.5	18	24
375	139	229	49	1.1	P531_0040KX501_0030 MF EZ703U	244	244	515	12.00	12/1	3000	3000	5000	27	5.5	3.5	18	26
450	91	146	35	2.0	P531_0050KX501_0020 MF EZ505U	306	306	644	10.00	10/1	2500	2500	4500	18	5.0	3.0	22	24
450	116	191	45	1.6	P531_0050KX501_0020 MF EZ703U	306	306	644	10.00	10/1	2500	2500	4500	27	5.0	3.0	22	26
450	157	287	60	1.2	P531_0050KX501_0020 MF EZ705U	306	306	644	10.00	10/1	2500	2500	4500	39	5.0	3.0	22	31
563	73	117	35	2.0	P531_0040KX501_0020 MF EZ505U	244	244	515	8.000	8/1	2500	2500	4500	18	5.5	3.5	18	24
563	92	153	45	1.6	P531_0040KX501_0020 MF EZ703U	244	244	515	8.000	8/1	2500	2500	4500	27	5.5	3.5	18	26
563	125	229	60	1.2	P531_0040KX501_0020 MF EZ705U	244	244	515	8.000	8/1	2500	2500	4500	40	5.5	3.5	18	31
750	54	88	35	2.0	P531_0030KX501_0020 MF EZ505U	183	183	387	6.000	6/1	2500	2500	4500	18	6.5	4.5	13	24
750	69	115	45	1.6	P531_0030KX501_0020 MF EZ703U	183	183	387	6.000	6/1	2500	2500	4500	28	6.5	4.5	13	26
750	94	172	60	1.2	P531_0030KX501_0020 MF EZ705U	183	183	387	6.000	6/1	2500	2500	4500	40	6.5	4.5	13	31
P532KX (n_{1N} = 3000 min^{-1}, $M_{2acc,max}$ = 360 Nm)																		
14	183	187	33	1.4	P532_0700KX401_0030 MF EZ301U	345	357	690	210.0	210/1	3000	3000	5500	1.6	4.0	2.0	30	13
15	174	178	51	1.3	P532_1000KX401_0020 MF EZ301U	288	288	575	200.0	200/1	2500	2500	5000	1.8	4.0	2.0	26	13
20	131	133	23	2.1	P532_0500KX401_0030 MF EZ301U	352	352	704	150.0	150/1	3000	3000	5500	1.6	4.0	2.0	32	13
20	223	236	39	1.2	P532_0500KX401_0030 MF EZ302U	352	352	704	150.0	150/1	3000	3000	5500	1.7	4.0	2.0	32	14
21	122	124	30	2.2	P532_0700KX401_0020 MF EZ301U	345	357	690	140.0	140/1	2500	2500	5000	1.8	4.0	2.0	30	13
21	208	220	51	1.3	P532_0700KX401_0020 MF EZ302U	345	357	690	140.0	140/1	2500	2500	5000	1.9	4.0	2.0	30	14
25	104	107	23	2.0	P532_0400KX401_0030 MF EZ301U	300	300	600	120.0	120/1	3000	3000	5500	1.6	4.5	2.5	31	13
25	179	189	40	1.2	P532_0400KX401_0030 MF EZ302U	300	300	600	120.0	120/1	3000	3000	5500	1.7	4.5	2.5	31	14
29	91	93	16	3.0	P532_0350KX401_0030 MF EZ301U	275	275	704	105.0	105/1	3000	3000	5500	1.6	4.5	2.5	32	13
29	156	165	27	1.7	P532_0350KX401_0030 MF EZ302U	352	352	704	105.0	105/1	3000	3000	5500	1.7	4.5	2.5	32	14
29	203	215	36	1.3	P532_0350KX401_0030 MF EZ303U	352	352	704	105.0	105/1	3000	3000	5500	1.8	4.5	2.5	32	14
30	87	89	21	3.1	P532_0500KX401_0020 MF EZ301U	262	262	704	100.0	100/1	2500	2500	5000	1.8	4.0	2.0	32	13
30	149	157	36	1.8	P532_0500KX401_0020 MF EZ302U	352	352	704	100.0	100/1	2500	2500	5000	1.9	4.0	2.0	32	14
30	194	205	46	1.4	P532_0500KX401_0020 MF EZ303U	352	352	704	100.0	100/1	2500	2500	5000	2.0	4.0	2.0	32	14
30	262	281	63	1.0	P532_0500KX401_0020 MF EZ401U	352	352	704	100.0	100/1	2500	2500	5000	2.6	4.0	2.0	32	16
36	73	75	15	3.2	P532_0280KX401_0030 MF EZ301U	220	220	600	84.00	84/1	3000	3000	5500	1.6	4.5	2.5	31	13
36	125	132	26	1.8	P532_0280KX401_0030 MF EZ302U	300	300	600	84.00	84/1	3000	3000	5500	1.7	4.5	2.5	31	14
36	163	172	33	1.4	P532_0280KX401_0030 MF EZ303U	300	300	600	84.00	84/1	3000	3000	5500	1.8	4.5	2.5	31	14
36	220	236	45	1.0	P532_0280KX401_0030 MF EZ401U	300	300	600	84.00	84/1	3000	3000	5500	2.4	4.5	2.5	31	16
38	70	71	21	3.1	P532_0400KX401_0020 MF EZ301U	210	210	600	80.00	80/1	2500	2500	5000	1.8	4.5	2.5	31	13
38	119	126	36	1.8	P532_0400KX401_0020 MF EZ302U	300	300	600	80.00	80/1	2500	2500	5000	1.9	4.5	2.5	31	14
38	155	164	47	1.4	P532_0400KX401_0020 MF EZ303U	300	300	600	80.00	80/1	2500	2500	5000	2.0	4.5	2.5	31	14
38	210	225	63	1.0	P532_0400KX401_0020 MF EZ401U	300	300	600	80.00	80/1	2500	2500	5000	2.6	4.5	2.5	31	16
40	65	67	12	4.0	P532_0250KX401_0030 MF EZ301U	197	197	710	75.00	75/1	3000	3000	5500	1.6	4.5	2.5	31	13

n_{2N} [rpm]	M_{2N} [Nm]	$M_{2,0}$ [Nm]	a_{th}	S	Type	M_{2acc} [Nm]	M_{2accHT} [Nm]	M_{2NOT} [Nm]	i	i_{exakt}	n_{1maxDB} EL1,2,5,6 [rpm]	n_{1maxDB} EL3,4 [rpm]	n_{1maxZB} [rpm]	J_1 [kgcm²]	$\Delta\varphi_2$ [arcmin]	$\Delta\varphi_{2red}$ [arcmin]	C_2 [Nm/arcmin]	m [kg]
P532KX (n_{1N} = 3000 min^{-1}, $M_{2acc,max}$ = 360 Nm)																		
40	112	118	20	2.3	P532_0250KX401_0030 MF EZ302U	351	351	710	75.00	75/1	3000	3000	5500	1.7	4.5	2.5	31	14
40	145	154	26	1.8	P532_0250KX401_0030 MF EZ303U	355	357	710	75.00	75/1	3000	3000	5500	1.9	4.5	2.5	31	14
40	197	211	36	1.3	P532_0250KX401_0030 MF EZ401U	355	357	710	75.00	75/1	3000	3000	5500	2.4	4.5	2.5	31	16
43	61	62	14	4.4	P532_0350KX401_0020 MF EZ301U	183	183	704	70.00	70/1	2500	2500	5000	1.8	4.5	2.5	32	13
43	104	110	25	2.6	P532_0350KX401_0020 MF EZ302U	328	328	704	70.00	70/1	2500	2500	5000	1.9	4.5	2.5	32	14
43	136	143	32	2.0	P532_0350KX401_0020 MF EZ303U	352	352	704	70.00	70/1	2500	2500	5000	2.0	4.5	2.5	32	14
43	183	197	44	1.5	P532_0350KX401_0020 MF EZ401U	352	352	704	70.00	70/1	2500	2500	5000	2.6	4.5	2.5	32	16
47	56	57	15	4.3	P532_0320KX401_0020 MF EZ301U	168	168	624	64.00	64/1	2500	2500	5000	1.9	4.5	2.5	25	13
47	95	101	25	2.5	P532_0320KX401_0020 MF EZ302U	299	299	624	64.00	64/1	2500	2500	5000	2.0	4.5	2.5	25	14
47	124	131	33	1.9	P532_0320KX401_0020 MF EZ303U	312	363	624	64.00	64/1	2500	2500	5000	2.1	4.5	2.5	25	14
47	168	180	45	1.4	P532_0320KX401_0020 MF EZ401U	312	363	624	64.00	64/1	2500	2500	5000	2.6	4.5	2.5	25	16
50	52	53	9.9	4.8	P532_0200KX401_0030 MF EZ301U	157	157	710	60.00	60/1	3000	3000	5500	1.7	4.5	2.5	31	13
50	89	94	17	2.8	P532_0200KX401_0030 MF EZ302U	281	281	710	60.00	60/1	3000	3000	5500	1.8	4.5	2.5	31	14
50	116	123	22	2.2	P532_0200KX401_0030 MF EZ303U	355	364	710	60.00	60/1	3000	3000	5500	1.9	4.5	2.5	31	14
50	157	168	30	1.6	P532_0200KX401_0030 MF EZ401U	355	364	710	60.00	60/1	3000	3000	5500	2.4	4.5	2.5	31	16
50	241	264	46	1.0	P532_0200KX401_0030 MF EZ501U	355	364	710	60.00	60/1	3000	3000	5500	4.4	4.5	2.5	31	17
54	49	50	14	4.7	P532_0280KX401_0020 MF EZ301U	147	147	600	56.00	56/1	2500	2500	5000	1.8	4.5	2.5	31	13
54	83	88	23	2.8	P532_0280KX401_0020 MF EZ302U	262	262	600	56.00	56/1	2500	2500	5000	1.9	4.5	2.5	31	14
54	108	115	30	2.1	P532_0280KX401_0020 MF EZ303U	300	300	600	56.00	56/1	2500	2500	5000	2.0	4.5	2.5	31	14
54	147	157	41	1.6	P532_0280KX401_0020 MF EZ401U	300	300	600	56.00	56/1	2500	2500	5000	2.6	4.5	2.5	31	16
54	225	246	63	1.0	P532_0280KX401_0020 MF EZ501U	300	300	600	56.00	56/1	2500	2500	5000	4.5	4.5	2.5	31	17
60	74	79	18	3.5	P532_0250KX401_0020 MF EZ302U	234	234	710	50.00	50/1	2500	2500	5000	2.0	4.5	2.5	31	14
60	97	102	24	2.7	P532_0250KX401_0020 MF EZ303U	328	328	710	50.00	50/1	2500	2500	5000	2.1	4.5	2.5	31	14
60	131	140	32	2.0	P532_0250KX401_0020 MF EZ401U	355	357	710	50.00	50/1	2500	2500	5000	2.6	4.5	2.5	31	16
60	201	220	50	1.3	P532_0250KX401_0020 MF EZ501U	355	357	710	50.00	50/1	2500	2500	5000	4.6	4.5	2.5	31	17
60	220	243	54	1.2	P532_0250KX401_0020 MF EZ402U	355	357	710	50.00	50/1	2500	2500	5000	3.3	4.5	2.5	31	17
75	60	63	15	4.2	P532_0200KX401_0020 MF EZ302U	187	187	710	40.00	40/1	2500	2500	5000	2.0	4.5	2.5	31	14
75	77	82	20	3.2	P532_0200KX401_0020 MF EZ303U	262	262	710	40.00	40/1	2500	2500	5000	2.1	4.5	2.5	31	14
75	105	112	27	2.4	P532_0200KX401_0020 MF EZ401U	318	318	710	40.00	40/1	2500	2500	5000	2.6	4.5	2.5	31	16
75	161	176	41	1.6	P532_0200KX401_0020 MF EZ501U	355	364	710	40.00	40/1	2500	2500	5000	4.6	4.5	2.5	31	17
75	176	195	45	1.4	P532_0200KX401_0020 MF EZ402U	355	364	710	40.00	40/1	2500	2500	5000	3.3	4.5	2.5	31	17
86	68	72	28	3.9	P532_0350KX401_0010 MF EZ303U	229	229	704	35.00	35/1	2500	2000	4000	2.8	4.5	2.5	32	14
86	92	98	37	2.9	P532_0350KX401_0010 MF EZ401U	278	278	704	35.00	35/1	2500	2000	4000	3.4	4.5	2.5	32	16
86	141	154	58	1.9	P532_0350KX401_0010 MF EZ501U	352	352	704	35.00	35/1	2500	2000	4000	5.3	4.5	2.5	32	17
86	154	170	63	1.7	P532_0350KX401_0010 MF EZ402U	352	352	704	35.00	35/1	2500	2000	4000	4.1	4.5	2.5	32	17
86	226	282	92	1.2	P532_0350KX401_0010 MF EZ404U	352	352	704	35.00	35/1	2500	2000	4000	5.4	4.5	2.5	32	19
86	242	262	99	1.1	P532_0350KX401_0010 MF EZ502U	352	352	704	35.00	35/1	2500	2000	4000	7.6	4.5	2.5	32	18
86	242	272	99	1.1	P532_0350KX401_0010 MF EZ701U	352	352	704	35.00	35/1	2500	2000	4000	11	4.5	2.5	32	20
94	48	50	14	4.6	P532_0160KX401_0020 MF EZ302U	150	150	600	32.00	32/1	2500	2500	5000	2.0	4.5	2.5	29	14
94	62	66	18	3.5	P532_0160KX401_0020 MF EZ303U	210	210	600	32.00	32/1	2500	2500	5000	2.1	4.5	2.5	29	14
94	84	90	24	2.6	P532_0160KX401_0020 MF EZ401U	255	255	600	32.00	32/1	2500	2500	5000	2.6	4.5	2.5	29	16
94	129	141	38	1.7	P532_0160KX401_0020 MF EZ501U	300	300	600	32.00	32/1	2500	2500	5000	4.6	4.5	2.5	29	17
94	141	156	41	1.6	P532_0160KX401_0020 MF EZ402U	300	300	600	32.00	32/1	2500	2500	5000	3.3	4.5	2.5	29	17
94	207	258	60	1.1	P532_0160KX401_0020 MF EZ404U	300	300	600	32.00	32/1	2500	2500	5000	4.7	4.5	2.5	29	19
P731KX (n_{1N} = 2000 min^{-1}, $M_{2acc,max}$ = 810 Nm)																		
200	373	418	181	1.2	P731_0050KX701_0020 MF EZ813U	606	606	1289	10.00	10/1	1800	1800	3500	120	5.0	3.0	52	62
250	298	334	164	1.3	P731_0040KX701_0020 MF EZ813U	485	485	1031	8.000	8/1	1800	1800	3500	120	5.5	3.5	47	62
286	261	292	213	1.7	P731_0070KX701_0010 MF EZ813U	805	840	1588	7.000	7/1	1800	1600	3000	131	4.5	2.5	54	62
286	386	460	316	1.1	P731_0070KX701_0010 MF EZ815U	805	840	1588	7.000	7/1	1800	1600	3000	194	4.5	2.5	54	75
333	224	251	164	1.3	P731_0030KX701_0020 MF EZ813U	364	364	773	6.000	6/1	1800	1800	3500	121	6.5	4.5	38	62
400	186	209	152	2.4	P731_0050KX701_0010 MF EZ813U	606	606	1134	5.000	5/1	1800	1600	3000	132	5.0	3.0	52	62
400	276	328	226	1.6	P731_0050KX701_0010 MF EZ815U	606	606	1134	5.000	5/1	1800	1600	3000	195	5.0	3.0	52	75
500	149	167	138	2.6	P731_0040KX701_0010 MF EZ813U	485	485	907	4.000	4/1	1800	1600	3000	133	5.5	3.5	47	62
500	221	263	205	1.8	P731_0040KX701_0010 MF EZ815U	485	485	907	4.000	4/1	1800	1600	3000	196	5.5	3.5	47	75
667	112	125	144	2.5	P731_0030KX701_0010 MF EZ813U	364	364	680	3.000	3/1	1800	1600	3000	138	6.5	4.5	38	62
667	166	197	213	1.7	P731_0030KX701_0010 MF EZ815U	364	364	680	3.000	3/1	1800	1600	3000	201	6.5	4.5	38	75
P731KX (n_{1N} = 3000 min^{-1}, $M_{2acc,max}$ = 810 Nm)																		
100	123	135	56	2.8	P731_0100KX701_0030 MF EZ501U	459	459	1150	30.00	30/1	2100	2100	4000	15	4.0	2.0	52	32
100	212	229	96	1.7	P731_0100KX701_0030 MF EZ502U	575	575	1150	30.00	30/1	2100	2100	4000	18	4.0	2.0	52	33
100	212	238	96	1.7	P731_0100KX701_0030 MF EZ701U	573	573	1150	30.00	30/1	2100	2100	4000	21	4.0	2.0	52	35
100	278	318	125	1.3	P731_0100KX701_0030 MF EZ503U	575	575	1150	30.00	30/1	2100	2100	4000	20	4.0	2.0	52	35
100	344	413	155	1.0	P731_0100KX701_0030 MF EZ702U	575	575	1150	30.00	30/1	2100	2100	4000	26	4.0	2.0	52	37
125	99	108	39	4.1	P731_0080KX701_0030 MF EZ501U	367	367	1336	24.00	24/1	2100	2100	4000	15	4.5	2.5	53	32
125	170	183	67	2.4	P731_0080KX701_0030 MF EZ502U	668	700	1336	24.00	24/1	2100	2100	4000	18	4.5	2.5	53	33

n_{2N} [rpm]	M_{2N} [Nm]	$M_{2,0}$ [Nm]	a_{th}	S	Type	M_{2acc} [Nm]	M_{2accHT} [Nm]	M_{2NOT} [Nm]	i	i_{exakt}	n_{1maxDB} EL1,2,5,6 [rpm]	n_{1maxDB} EL3,4 [rpm]	n_{1maxZB} [rpm]	J_1 [kgcm²]	$\Delta\varphi_2$ [arcmin]	$\Delta\varphi_{2red}$ [arcmin]	C_2 [Nm/arcmin]	m [kg]
P731KX (n_{1N} = 3000 min^{-1}, $M_{2acc,max}$ = 810 Nm)																		
125	170	190	67	2.4	P731_0080KX701_0030 MF EZ701U	459	459	1336	24.00	24/1	2100	2100	4000	21	4.5	2.5	53	35
125	222	255	88	1.8	P731_0080KX701_0030 MF EZ503U	668	700	1336	24.00	24/1	2100	2100	4000	20	4.5	2.5	53	35
125	275	330	109	1.5	P731_0080KX701_0030 MF EZ702U	668	700	1336	24.00	24/1	2100	2100	4000	26	4.5	2.5	53	37
125	310	367	122	1.3	P731_0080KX701_0030 MF EZ505U	668	700	1336	24.00	24/1	2100	2100	4000	25	4.5	2.5	53	37
125	378	477	149	1.1	P731_0080KX701_0030 MF EZ703U	668	700	1336	24.00	24/1	2100	2100	4000	34	4.5	2.5	53	39
143	148	161	53	3.0	P731_0070KX701_0030 MF EZ502U	622	622	1610	21.00	21/1	2100	2100	4000	18	4.5	2.5	54	33
143	148	167	53	3.0	P731_0070KX701_0030 MF EZ701U	401	401	1610	21.00	21/1	2100	2100	4000	21	4.5	2.5	54	35
143	195	223	70	2.3	P731_0070KX701_0030 MF EZ503U	805	840	1610	21.00	21/1	2100	2100	4000	20	4.5	2.5	54	35
143	241	289	86	1.8	P731_0070KX701_0030 MF EZ702U	805	823	1610	21.00	21/1	2100	2100	4000	26	4.5	2.5	54	37
143	271	321	97	1.6	P731_0070KX701_0030 MF EZ505U	805	840	1610	21.00	21/1	2100	2100	4000	25	4.5	2.5	54	37
143	331	417	119	1.3	P731_0070KX701_0030 MF EZ703U	805	840	1610	21.00	21/1	2100	2100	4000	34	4.5	2.5	54	39
143	427	606	153	1.0	P731_0070KX701_0030 MF EZ705U	805	840	1610	21.00	21/1	2100	2100	4000	47	4.5	2.5	54	45
150	82	90	50	4.3	P731_0100KX701_0020 MF EZ501U	306	306	1150	20.00	20/1	1800	1800	3500	18	4.0	2.0	52	32
150	141	153	86	2.5	P731_0100KX701_0020 MF EZ502U	575	575	1150	20.00	20/1	1800	1800	3500	20	4.0	2.0	52	33
150	141	159	86	2.5	P731_0100KX701_0020 MF EZ701U	382	382	1150	20.00	20/1	1800	1800	3500	23	4.0	2.0	52	35
150	185	212	113	1.9	P731_0100KX701_0020 MF EZ503U	575	575	1150	20.00	20/1	1800	1800	3500	22	4.0	2.0	52	35
150	229	275	140	1.5	P731_0100KX701_0020 MF EZ702U	575	575	1150	20.00	20/1	1800	1800	3500	29	4.0	2.0	52	37
150	258	306	158	1.4	P731_0100KX701_0020 MF EZ505U	575	575	1150	20.00	20/1	1800	1800	3500	27	4.0	2.0	52	37
150	315	397	193	1.1	P731_0100KX701_0020 MF EZ703U	575	575	1150	20.00	20/1	1800	1800	3500	36	4.0	2.0	52	39
188	113	122	61	3.5	P731_0080KX701_0020 MF EZ502U	474	474	1336	16.00	16/1	1800	1800	3500	20	4.5	2.5	53	33
188	113	127	61	3.5	P731_0080KX701_0020 MF EZ701U	306	306	1336	16.00	16/1	1800	1800	3500	23	4.5	2.5	53	35
188	148	170	79	2.7	P731_0080KX701_0020 MF EZ503U	657	657	1336	16.00	16/1	1800	1800	3500	23	4.5	2.5	53	35
188	183	220	98	2.2	P731_0080KX701_0020 MF EZ702U	627	627	1336	16.00	16/1	1800	1800	3500	29	4.5	2.5	53	37
188	206	245	110	1.9	P731_0080KX701_0020 MF EZ505U	668	700	1336	16.00	16/1	1800	1800	3500	27	4.5	2.5	53	37
188	252	318	135	1.6	P731_0080KX701_0020 MF EZ703U	668	700	1336	16.00	16/1	1800	1800	3500	37	4.5	2.5	53	39
188	326	462	174	1.2	P731_0080KX701_0020 MF EZ705U	668	700	1336	16.00	16/1	1800	1800	3500	49	4.5	2.5	53	45
200	106	115	40	4.0	P731_0050KX701_0030 MF EZ502U	444	444	1289	15.00	15/1	2100	2100	4000	18	5.0	3.0	52	33
200	106	119	40	4.0	P731_0050KX701_0030 MF EZ701U	287	287	1289	15.00	15/1	2100	2100	4000	21	5.0	3.0	52	35
200	139	159	52	3.0	P731_0050KX701_0030 MF EZ503U	606	606	1289	15.00	15/1	2100	2100	4000	20	5.0	3.0	52	35
200	172	206	64	2.5	P731_0050KX701_0030 MF EZ702U	588	588	1289	15.00	15/1	2100	2100	4000	26	5.0	3.0	52	37
200	193	229	72	2.2	P731_0050KX701_0030 MF EZ505U	606	606	1289	15.00	15/1	2100	2100	4000	25	5.0	3.0	52	37
200	236	298	88	1.8	P731_0050KX701_0030 MF EZ703U	606	606	1289	15.00	15/1	2100	2100	4000	34	5.0	3.0	52	39
200	305	433	114	1.4	P731_0050KX701_0030 MF EZ705U	606	606	1289	15.00	15/1	2100	2100	4000	47	5.0	3.0	52	45
214	99	107	48	4.4	P731_0070KX701_0020 MF EZ502U	415	415	1610	14.00	14/1	1800	1800	3500	20	4.5	2.5	54	33
214	99	111	48	4.4	P731_0070KX701_0020 MF EZ701U	268	268	1610	14.00	14/1	1800	1800	3500	24	4.5	2.5	54	35
214	130	148	63	3.4	P731_0070KX701_0020 MF EZ503U	575	575	1610	14.00	14/1	1800	1800	3500	23	4.5	2.5	54	35
214	161	193	78	2.7	P731_0070KX701_0020 MF EZ702U	548	548	1610	14.00	14/1	1800	1800	3500	29	4.5	2.5	54	37
214	181	214	88	2.4	P731_0070KX701_0020 MF EZ505U	805	840	1610	14.00	14/1	1800	1800	3500	27	4.5	2.5	54	37
214	221	278	107	2.0	P731_0070KX701_0020 MF EZ703U	805	840	1610	14.00	14/1	1800	1800	3500	37	4.5	2.5	54	39
214	285	404	139	1.5	P731_0070KX701_0020 MF EZ705U	805	840	1610	14.00	14/1	1800	1800	3500	49	4.5	2.5	54	45
250	85	92	40	4.0	P731_0040KX701_0030 MF EZ502U	355	355	1031	12.00	12/1	2100	2100	4000	18	5.5	3.5	47	33
250	85	95	40	4.0	P731_0040KX701_0030 MF EZ701U	229	229	1031	12.00	12/1	2100	2100	4000	21	5.5	3.5	47	35
250	111	127	52	3.0	P731_0040KX701_0030 MF EZ503U	485	485	1031	12.00	12/1	2100	2100	4000	20	5.5	3.5	47	35
250	138	165	64	2.5	P731_0040KX701_0030 MF EZ702U	470	470	1031	12.00	12/1	2100	2100	4000	27	5.5	3.5	47	37
250	155	183	72	2.2	P731_0040KX701_0030 MF EZ505U	485	485	1031	12.00	12/1	2100	2100	4000	25	5.5	3.5	47	37
250	189	238	88	1.8	P731_0040KX701_0030 MF EZ703U	485	485	1031	12.00	12/1	2100	2100	4000	34	5.5	3.5	47	39
250	244	346	114	1.4	P731_0040KX701_0030 MF EZ705U	485	485	1031	12.00	12/1	2100	2100	4000	47	5.5	3.5	47	45
300	93	106	47	4.6	P731_0050KX701_0020 MF EZ503U	411	411	1289	10.00	10/1	1800	1800	3500	23	5.0	3.0	52	35
300	115	138	58	3.7	P731_0050KX701_0020 MF EZ702U	392	392	1289	10.00	10/1	1800	1800	3500	29	5.0	3.0	52	37
300	129	153	65	3.3	P731_0050KX701_0020 MF EZ505U	606	606	1289	10.00	10/1	1800	1800	3500	27	5.0	3.0	52	37
300	158	199	80	2.7	P731_0050KX701_0020 MF EZ703U	606	606	1289	10.00	10/1	1800	1800	3500	37	5.0	3.0	52	39
300	204	289	103	2.1	P731_0050KX701_0020 MF EZ705U	606	606	1289	10.00	10/1	1800	1800	3500	49	5.0	3.0	52	45
375	74	85	47	4.6	P731_0040KX701_0020 MF EZ503U	329	329	1031	8.000	8/1	1800	1800	3500	23	5.5	3.5	47	35
375	92	110	58	3.7	P731_0040KX701_0020 MF EZ702U	313	313	1031	8.000	8/1	1800	1800	3500	29	5.5	3.5	47	37
375	103	122	65	3.3	P731_0040KX701_0020 MF EZ505U	485	485	1031	8.000	8/1	1800	1800	3500	28	5.5	3.5	47	37
375	126	159	80	2.7	P731_0040KX701_0020 MF EZ703U	485	485	1031	8.000	8/1	1800	1800	3500	37	5.5	3.5	47	39
375	163	231	103	2.1	P731_0040KX701_0020 MF EZ705U	485	485	1031	8.000	8/1	1800	1800	3500	50	5.5	3.5	47	45
429	80	96	75	4.8	P731_0070KX701_0010 MF EZ702U	274	274	1588	7.000	7/1	1800	1600	3000	40	4.5	2.5	54	37
429	90	107	85	4.3	P731_0070KX701_0010 MF EZ505U	448	448	1588	7.000	7/1	1800	1600	3000	38	4.5	2.5	54	37
429	110	139	103	3.5	P731_0070KX701_0010 MF EZ703U	435	435	1588	7.000	7/1	1800	1600	3000	48	4.5	2.5	54	39
429	142	202	133	2.7	P731_0070KX701_0010 MF EZ705U	696	696	1588	7.000	7/1	1800	1600	3000	60	4.5	2.5	54	45
500	56	64	47	4.6	P731_0030KX701_0020 MF EZ503U	247	247	773	6.000	6/1	1800	1800	3500	25	6.5	4.5	38	35
500	69	83	58	3.7	P731_0030KX701_0020 MF EZ702U	235	235	773	6.000	6/1	1800	1800	3500	31	6.5	4.5	38	37
500	77	92	65	3.3	P731_0030KX701_0020 MF EZ505U	364	364	773	6.000	6/1	1800	1800	3500	29	6.5	4.5	38	37

n_{2N} [rpm]	M_{2N} [Nm]	$M_{2,0}$ [Nm]	a_{th}	S	Type	M_{2acc} [Nm]	M_{2accHT} [Nm]	M_{2NOT} [Nm]	i	i_{exakt}	n_{1maxDB} EL1,2,5,6 [rpm]	n_{1maxDB} EL3,4 [rpm]	n_{1maxZB} [rpm]	J_1 [kgcm²]	$\Delta\varphi_2$ [arcmin]	$\Delta\varphi_{2red}$ [arcmin]	C_2 [Nm/arcmin]	m [kg]
P731KX (n_{1N} = 3000 min^{-1}, $M_{2acc,max}$ = 810 Nm)																		
500	95	119	80	2.7	P731_0030KX701_0020 MF EZ703U	364	364	773	6.000	6/1	1800	1800	3500	39	6.5	4.5	38	39
500	122	173	103	2.1	P731_0030KX701_0020 MF EZ705U	364	364	773	6.000	6/1	1800	1800	3500	51	6.5	4.5	38	45
600	79	99	74	4.9	P731_0050KX701_0010 MF EZ703U	311	311	1134	5.000	5/1	1800	1600	3000	49	5.0	3.0	52	39
600	102	144	95	3.8	P731_0050KX701_0010 MF EZ705U	497	497	1134	5.000	5/1	1800	1600	3000	61	5.0	3.0	52	45
750	81	115	86	4.2	P731_0040KX701_0010 MF EZ705U	397	397	907	4.000	4/1	1800	1600	3000	63	5.5	3.5	47	45
1000	61	87	90	4.0	P731_0030KX701_0010 MF EZ705U	298	298	680	3.000	3/1	1800	1600	3000	68	6.5	4.5	38	45
P731KX (n_{1N} = 4000 min^{-1}, $M_{2acc,max}$ = 610 Nm)																		
267	361	626	148	1.1	P731_0050KX701_0030 MF EZ813U	606	606	1289	15.00	15/1	2100	2100	4000	117	5.0	3.0	52	62
267	374	962	153	1.0	P731_0050KX701_0030 MF EZ815U	606	606	1289	15.00	15/1	2100	2100	4000	180	5.0	3.0	52	75
333	289	501	148	1.1	P731_0040KX701_0030 MF EZ813U	485	485	1031	12.00	12/1	2100	2100	4000	117	5.5	3.5	47	62
333	299	770	153	1.0	P731_0040KX701_0030 MF EZ815U	485	485	1031	12.00	12/1	2100	2100	4000	180	5.5	3.5	47	75
P732KX (n_{1N} = 3000 min^{-1}, $M_{2acc,max}$ = 810 Nm)																		
14	550	590	50	1.1	P732_0700KX501_0030 MF EZ401U	762	799	1525	210.0	210/1	3000	3000	5000	5.7	4.0	2.0	59	26
20	393	421	37	1.4	P732_0500KX501_0030 MF EZ401U	770	805	1540	150.0	150/1	3000	3000	5000	5.7	4.0	2.0	62	26
21	367	393	45	1.6	P732_0700KX501_0020 MF EZ401U	762	799	1525	140.0	140/1	2500	2500	4500	6.2	4.0	2.0	59	26
21	563	616	69	1.0	P732_0700KX501_0020 MF EZ501U	762	799	1525	140.0	140/1	2500	2500	4500	8.2	4.0	2.0	59	27
25	314	337	36	1.4	P732_0400KX501_0030 MF EZ401U	700	700	1400	120.0	120/1	3000	3000	5000	5.7	4.5	2.5	62	26
29	275	295	27	2.0	P732_0350KX501_0030 MF EZ401U	770	805	1540	105.0	105/1	3000	3000	5000	5.7	4.5	2.5	62	26
29	422	462	41	1.3	P732_0350KX501_0030 MF EZ501U	770	805	1540	105.0	105/1	3000	3000	5000	7.7	4.5	2.5	62	27
29	462	511	45	1.2	P732_0350KX501_0030 MF EZ402U	770	805	1540	105.0	105/1	3000	3000	5000	6.4	4.5	2.5	62	27
30	262	281	33	2.2	P732_0500KX501_0020 MF EZ401U	770	795	1540	100.0	100/1	2500	2500	4500	6.2	4.0	2.0	62	26
30	402	440	51	1.4	P732_0500KX501_0020 MF EZ501U	770	805	1540	100.0	100/1	2500	2500	4500	8.2	4.0	2.0	62	27
30	440	487	56	1.3	P732_0500KX501_0020 MF EZ402U	770	805	1540	100.0	100/1	2500	2500	4500	6.9	4.0	2.0	62	27
36	220	236	22	2.4	P732_0280KX501_0030 MF EZ401U	668	668	1400	84.00	84/1	3000	3000	5000	5.7	4.5	2.5	62	26
36	338	369	33	1.6	P732_0280KX501_0030 MF EZ501U	700	700	1400	84.00	84/1	3000	3000	5000	7.7	4.5	2.5	62	27
36	369	409	36	1.5	P732_0280KX501_0030 MF EZ402U	700	700	1400	84.00	84/1	3000	3000	5000	6.4	4.5	2.5	62	27
38	210	225	33	2.2	P732_0400KX501_0020 MF EZ401U	636	636	1400	80.00	80/1	2500	2500	4500	6.2	4.5	2.5	62	26
38	322	352	51	1.4	P732_0400KX501_0020 MF EZ501U	700	700	1400	80.00	80/1	2500	2500	4500	8.2	4.5	2.5	62	27
38	352	389	55	1.3	P732_0400KX501_0020 MF EZ402U	700	700	1400	80.00	80/1	2500	2500	4500	6.9	4.5	2.5	62	27
40	197	211	21	2.5	P732_0250KX501_0030 MF EZ401U	597	597	1610	75.00	75/1	3000	3000	5000	5.8	4.5	2.5	62	26
40	302	330	32	1.7	P732_0250KX501_0030 MF EZ501U	805	805	1610	75.00	75/1	3000	3000	5000	7.7	4.5	2.5	62	27
40	330	365	35	1.5	P732_0250KX501_0030 MF EZ402U	805	805	1610	75.00	75/1	3000	3000	5000	6.5	4.5	2.5	62	27
40	484	604	51	1.0	P732_0250KX501_0030 MF EZ404U	805	805	1610	75.00	75/1	3000	3000	5000	7.8	4.5	2.5	62	29
43	183	197	24	2.9	P732_0350KX501_0020 MF EZ401U	557	557	1540	70.00	70/1	2500	2500	4500	6.3	4.5	2.5	62	26
43	282	308	37	1.9	P732_0350KX501_0020 MF EZ501U	770	805	1540	70.00	70/1	2500	2500	4500	8.2	4.5	2.5	62	27
43	308	341	41	1.8	P732_0350KX501_0020 MF EZ402U	770	805	1540	70.00	70/1	2500	2500	4500	7.0	4.5	2.5	62	27
43	452	563	60	1.2	P732_0350KX501_0020 MF EZ404U	770	805	1540	70.00	70/1	2500	2500	4500	8.3	4.5	2.5	62	29
43	485	524	64	1.1	P732_0350KX501_0020 MF EZ502U	770	805	1540	70.00	70/1	2500	2500	4500	11	4.5	2.5	62	29
43	485	544	64	1.1	P732_0350KX501_0020 MF EZ701U	770	805	1540	70.00	70/1	2500	2500	4500	14	4.5	2.5	62	31
47	168	180	25	2.8	P732_0320KX501_0020 MF EZ401U	509	509	1460	64.00	64/1	2500	2500	4500	6.4	4.5	2.5	56	26
47	258	281	39	1.8	P732_0320KX501_0020 MF EZ501U	730	730	1460	64.00	64/1	2500	2500	4500	8.4	4.5	2.5	56	27
47	281	311	43	1.7	P732_0320KX501_0020 MF EZ402U	730	730	1460	64.00	64/1	2500	2500	4500	7.1	4.5	2.5	56	27
47	413	515	63	1.1	P732_0320KX501_0020 MF EZ404U	730	730	1460	64.00	64/1	2500	2500	4500	8.5	4.5	2.5	56	29
47	443	479	67	1.1	P732_0320KX501_0020 MF EZ502U	730	730	1460	64.00	64/1	2500	2500	4500	11	4.5	2.5	56	29
47	443	497	67	1.1	P732_0320KX501_0020 MF EZ701U	730	730	1460	64.00	64/1	2500	2500	4500	14	4.5	2.5	56	31
50	157	168	18	2.9	P732_0200KX501_0030 MF EZ401U	477	477	1610	60.00	60/1	3000	3000	5000	5.8	4.5	2.5	60	26
50	241	264	28	1.9	P732_0200KX501_0030 MF EZ501U	805	805	1610	60.00	60/1	3000	3000	5000	7.8	4.5	2.5	60	27
50	264	292	30	1.7	P732_0200KX501_0030 MF EZ402U	805	805	1610	60.00	60/1	3000	3000	5000	6.5	4.5	2.5	60	27
50	387	483	44	1.2	P732_0200KX501_0030 MF EZ404U	805	805	1610	60.00	60/1	3000	3000	5000	7.9	4.5	2.5	60	29
50	415	449	48	1.1	P732_0200KX501_0030 MF EZ502U	805	805	1610	60.00	60/1	3000	3000	5000	10	4.5	2.5	60	29
50	415	466	48	1.1	P732_0200KX501_0030 MF EZ701U	805	805	1610	60.00	60/1	3000	3000	5000	13	4.5	2.5	60	31
54	147	157	19	3.7	P732_0280KX501_0020 MF EZ401U	445	445	1400	56.00	56/1	2500	2500	4500	6.3	4.5	2.5	62	26
54	225	246	30	2.4	P732_0280KX501_0020 MF EZ501U	700	700	1400	56.00	56/1	2500	2500	4500	8.3	4.5	2.5	62	27
54	246	272	33	2.2	P732_0280KX501_0020 MF EZ402U	700	700	1400	56.00	56/1	2500	2500	4500	7.0	4.5	2.5	62	27
54	362	451	48	1.5	P732_0280KX501_0020 MF EZ404U	700	700	1400	56.00	56/1	2500	2500	4500	8.3	4.5	2.5	62	29
54	388	419	51	1.4	P732_0280KX501_0020 MF EZ502U	700	700	1400	56.00	56/1	2500	2500	4500	11	4.5	2.5	62	29
54	388	435	51	1.4	P732_0280KX501_0020 MF EZ701U	700	700	1400	56.00	56/1	2500	2500	4500	14	4.5	2.5	62	31
54	508	582	67	1.1	P732_0280KX501_0020 MF EZ503U	700	700	1400	56.00	56/1	2500	2500	4500	13	4.5	2.5	62	30
60	131	140	19	3.8	P732_0250KX501_0020 MF EZ401U	398	398	1610	50.00	50/1	2500	2500	4500	6.3	4.5	2.5	62	26
60	201	220	29	2.5	P732_0250KX501_0020 MF EZ501U	749	749	1610	50.00	50/1	2500	2500	4500	8.3	4.5	2.5	62	27
60	220	243	31	2.3	P732_0250KX501_0020 MF EZ402U	749	749	1610	50.00	50/1	2500	2500	4500	7.0	4.5	2.5	62	27
60	323	402	46	1.5	P732_0250KX501_0020 MF EZ404U	805	805	1610	50.00	50/1	2500	2500	4500	8.4	4.5	2.5	62	29
60	346	374	49	1.4	P732_0250KX501_0020 MF EZ502U	805	805	1610	50.00	50/1	2500	2500	4500	11	4.5	2.5	62	29
60	346	388	49	1.4	P732_0250KX501_0020 MF EZ701U	805	805	1610	50.00	50/1	2500	2500	4500	14	4.5	2.5	62	31

n_{2N} [rpm]	M_{2N} [Nm]	$M_{2,0}$ [Nm]	a_{th}	S	Type	M_{2acc} [Nm]	M_{2accHT} [Nm]	M_{2NOT} [Nm]	i	i_{exakt}	n_{1maxDB} EL1,2,5,6 [rpm]	n_{1maxDB} EL3,4 [rpm]	n_{1maxZB} [rpm]	J_1 [kgcm²]	$\Delta\varphi_2$ [arcmin]	$\Delta\varphi_{2red}$ [arcmin]	C_2 [Nm/arcmin]	m [kg]
P732KX (n_{1N} = 3000 min^{-1}, $M_{2acc,max}$ = 810 Nm)																		
60	454	519	65	1.1	P732_0250KX501_0020 MF EZ503U	805	805	1610	50.00	50/1	2500	2500	4500	13	4.5	2.5	62	30
75	105	112	16	4.4	P732_0200KX501_0020 MF EZ401U	318	318	1610	40.00	40/1	2500	2500	4500	6.4	4.5	2.5	60	26
75	161	176	25	2.9	P732_0200KX501_0020 MF EZ501U	599	599	1610	40.00	40/1	2500	2500	4500	8.4	4.5	2.5	60	27
75	176	195	27	2.6	P732_0200KX501_0020 MF EZ402U	599	599	1610	40.00	40/1	2500	2500	4500	7.1	4.5	2.5	60	27
75	258	322	40	1.8	P732_0200KX501_0020 MF EZ404U	805	805	1610	40.00	40/1	2500	2500	4500	8.5	4.5	2.5	60	29
75	277	299	43	1.7	P732_0200KX501_0020 MF EZ502U	805	805	1610	40.00	40/1	2500	2500	4500	11	4.5	2.5	60	29
75	277	311	43	1.7	P732_0200KX501_0020 MF EZ701U	749	749	1610	40.00	40/1	2500	2500	4500	14	4.5	2.5	60	31
75	363	415	56	1.3	P732_0200KX501_0020 MF EZ503U	805	805	1610	40.00	40/1	2500	2500	4500	13	4.5	2.5	60	30
75	449	539	70	1.0	P732_0200KX501_0020 MF EZ702U	805	805	1610	40.00	40/1	2500	2500	4500	19	4.5	2.5	60	33
86	141	154	31	3.8	P732_0350KX501_0010 MF EZ501U	524	524	1540	35.00	35/1	2500	2000	3500	11	4.5	2.5	62	27
86	154	170	34	3.5	P732_0350KX501_0010 MF EZ402U	524	524	1540	35.00	35/1	2500	2000	3500	9.4	4.5	2.5	62	27
86	226	282	50	2.4	P732_0350KX501_0010 MF EZ404U	770	805	1540	35.00	35/1	2500	2000	3500	11	4.5	2.5	62	29
86	242	262	54	2.2	P732_0350KX501_0010 MF EZ502U	770	805	1540	35.00	35/1	2500	2000	3500	13	4.5	2.5	62	29
86	242	272	54	2.2	P732_0350KX501_0010 MF EZ701U	655	655	1540	35.00	35/1	2500	2000	3500	16	4.5	2.5	62	31
86	318	364	71	1.7	P732_0350KX501_0010 MF EZ503U	770	805	1540	35.00	35/1	2500	2000	3500	15	4.5	2.5	62	30
86	393	472	87	1.4	P732_0350KX501_0010 MF EZ702U	770	805	1540	35.00	35/1	2500	2000	3500	22	4.5	2.5	62	33
86	442	524	98	1.2	P732_0350KX501_0010 MF EZ505U	770	805	1540	35.00	35/1	2500	2000	3500	20	4.5	2.5	62	33
94	129	141	20	3.5	P732_0160KX501_0020 MF EZ501U	479	479	1400	32.00	32/1	2500	2500	4500	8.4	4.5	2.5	59	27
94	141	156	22	3.2	P732_0160KX501_0020 MF EZ402U	479	479	1400	32.00	32/1	2500	2500	4500	7.2	4.5	2.5	59	27
94	207	258	33	2.2	P732_0160KX501_0020 MF EZ404U	700	700	1400	32.00	32/1	2500	2500	4500	8.5	4.5	2.5	59	29
94	222	240	35	2.0	P732_0160KX501_0020 MF EZ502U	700	700	1400	32.00	32/1	2500	2500	4500	11	4.5	2.5	59	29
94	222	249	35	2.0	P732_0160KX501_0020 MF EZ701U	599	599	1400	32.00	32/1	2500	2500	4500	14	4.5	2.5	59	31
94	290	332	46	1.5	P732_0160KX501_0020 MF EZ503U	700	700	1400	32.00	32/1	2500	2500	4500	13	4.5	2.5	59	30
94	359	431	57	1.3	P732_0160KX501_0020 MF EZ702U	700	700	1400	32.00	32/1	2500	2500	4500	19	4.5	2.5	59	33
94	404	479	64	1.1	P732_0160KX501_0020 MF EZ505U	700	700	1400	32.00	32/1	2500	2500	4500	18	4.5	2.5	59	33
P732KX (n_{1N} = 4500 min^{-1}, $M_{2acc,max}$ = 810 Nm)																		
80	498	802	66	1.1	P732_0280KX501_0020 MF EZ505U	700	700	1400	56.00	56/1	2500	2500	4500	18	4.5	2.5	62	33
90	444	716	63	1.1	P732_0250KX501_0020 MF EZ505U	805	805	1610	50.00	50/1	2500	2500	4500	18	4.5	2.5	62	33
113	356	573	55	1.3	P732_0200KX501_0020 MF EZ505U	805	805	1610	40.00	40/1	2500	2500	4500	18	4.5	2.5	60	33
113	453	749	70	1.0	P732_0200KX501_0020 MF EZ703U	805	805	1610	40.00	40/1	2500	2500	4500	27	4.5	2.5	60	35
141	284	458	45	1.6	P732_0160KX501_0020 MF EZ505U	700	700	1400	32.00	32/1	2500	2500	4500	18	4.5	2.5	59	33
141	362	599	57	1.2	P732_0160KX501_0020 MF EZ703U	700	700	1400	32.00	32/1	2500	2500	4500	27	4.5	2.5	59	35
P831KX (n_{1N} = 2000 min^{-1}, $M_{2acc,max}$ = 1210 Nm)																		
100	745	836	188	1.1	P831_0100KX701_0020 MF EZ813U	1213	1213	2577	20.00	20/1	1800	1800	3500	120	4.0	2.0	130	78
125	596	669	164	1.3	P831_0080KX701_0020 MF EZ813U	970	970	2062	16.00	16/1	1800	1800	3500	120	4.5	2.5	128	78
143	522	585	164	1.3	P831_0070KX701_0020 MF EZ813U	849	849	1804	14.00	14/1	1800	1800	3500	121	4.5	2.5	125	78
200	373	418	174	2.1	P831_0100KX701_0010 MF EZ813U	1213	1213	2268	10.00	10/1	1800	1600	3000	132	4.0	2.0	130	78
200	552	657	257	1.4	P831_0100KX701_0010 MF EZ815U	1213	1213	2268	10.00	10/1	1800	1600	3000	195	4.0	2.0	130	90
250	298	334	138	2.6	P831_0080KX701_0010 MF EZ813U	970	970	1814	8.000	8/1	1800	1600	3000	133	4.5	2.5	128	78
250	441	526	205	1.8	P831_0080KX701_0010 MF EZ815U	970	970	1814	8.000	8/1	1800	1600	3000	197	4.5	2.5	128	90
286	261	292	138	2.6	P831_0070KX701_0010 MF EZ813U	849	849	1588	7.000	7/1	1800	1600	3000	135	4.5	2.5	125	78
286	386	460	205	1.8	P831_0070KX701_0010 MF EZ815U	849	849	1588	7.000	7/1	1800	1600	3000	198	4.5	2.5	125	90
333	224	251	164	1.3	P831_0030KX701_0020 MF EZ813U	364	364	773	6.000	6/1	1800	1800	3500	130	6.5	4.5	59	78
400	186	209	138	2.6	P831_0050KX701_0010 MF EZ813U	606	606	1134	5.000	5/1	1800	1600	3000	140	5.0	3.0	104	78
400	276	328	205	1.8	P831_0050KX701_0010 MF EZ815U	606	606	1134	5.000	5/1	1800	1600	3000	203	5.0	3.0	104	90
500	149	167	138	2.6	P831_0040KX701_0010 MF EZ813U	485	485	907	4.000	4/1	1800	1600	3000	148	5.5	3.5	84	78
500	221	263	205	1.8	P831_0040KX701_0010 MF EZ815U	485	485	907	4.000	4/1	1800	1600	3000	211	5.5	3.5	84	90
667	112	125	138	2.6	P831_0030KX701_0010 MF EZ813U	364	364	680	3.000	3/1	1800	1600	3000	171	6.5	4.5	59	78
667	166	197	205	1.8	P831_0030KX701_0010 MF EZ815U	364	364	680	3.000	3/1	1800	1600	3000	234	6.5	4.5	59	90
P831KX (n_{1N} = 3000 min^{-1}, $M_{2acc,max}$ = 1210 Nm)																		
100	212	229	40	4.0	P831_0100KX701_0030 MF EZ502U	889	889	2577	30.00	30/1	2100	2100	4000	18	4.0	2.0	130	49
100	212	238	40	4.0	P831_0100KX701_0030 MF EZ701U	573	573	2577	30.00	30/1	2100	2100	4000	21	4.0	2.0	130	50
100	278	318	52	3.0	P831_0100KX701_0030 MF EZ503U	1213	1213	2577	30.00	30/1	2100	2100	4000	20	4.0	2.0	130	50
100	344	413	64	2.5	P831_0100KX701_0030 MF EZ702U	1175	1175	2577	30.00	30/1	2100	2100	4000	26	4.0	2.0	130	53
100	387	459	72	2.2	P831_0100KX701_0030 MF EZ505U	1213	1213	2577	30.00	30/1	2100	2100	4000	25	4.0	2.0	130	53
100	473	596	88	1.8	P831_0100KX701_0030 MF EZ703U	1213	1213	2577	30.00	30/1	2100	2100	4000	34	4.0	2.0	130	55
100	611	866	114	1.4	P831_0100KX701_0030 MF EZ705U	1213	1213	2577	30.00	30/1	2100	2100	4000	47	4.0	2.0	130	60
125	170	183	40	4.0	P831_0080KX701_0030 MF EZ502U	711	711	2062	24.00	24/1	2100	2100	4000	18	4.5	2.5	128	49
125	170	190	40	4.0	P831_0080KX701_0030 MF EZ701U	459	459	2062	24.00	24/1	2100	2100	4000	21	4.5	2.5	128	50
125	222	255	52	3.0	P831_0080KX701_0030 MF EZ503U	970	970	2062	24.00	24/1	2100	2100	4000	20	4.5	2.5	128	50
125	275	330	64	2.5	P831_0080KX701_0030 MF EZ702U	940	940	2062	24.00	24/1	2100	2100	4000	27	4.5	2.5	128	53
125	310	367	72	2.2	P831_0080KX701_0030 MF EZ505U	970	970	2062	24.00	24/1	2100	2100	4000	25	4.5	2.5	128	53
125	378	477	88	1.8	P831_0080KX701_0030 MF EZ703U	970	970	2062	24.00	24/1	2100	2100	4000	35	4.5	2.5	128	55

n_{2N} [rpm]	M_{2N} [Nm]	$M_{2,0}$ [Nm]	a_{th}	S	Type	M_{2acc} [Nm]	M_{2accHT} [Nm]	M_{2NOT} [Nm]	i	i_{exakt}	n_{1maxDB} EL1,2,5,6 [rpm]	n_{1maxDB} EL3,4 [rpm]	n_{1maxZB} [rpm]	J_1 [kgcm²]	$\Delta\varphi_2$ [arcmin]	$\Delta\varphi_{2red}$ [arcmin]	C_2 [Nm/arcmin]	m [kg]
P831KX (n_{1N} = 3000 min^{-1}, $M_{2acc,max}$ = 1210 Nm)																		
125	488	693	114	1.4	P831_0080KX701_0030 MF EZ705U	970	970	2062	24.00	24/1	2100	2100	4000	47	4.5	2.5	128	60
143	148	161	40	4.0	P831_0070KX701_0030 MF EZ502U	622	622	1804	21.00	21/1	2100	2100	4000	18	4.5	2.5	125	49
143	148	167	40	4.0	P831_0070KX701_0030 MF EZ701U	401	401	1804	21.00	21/1	2100	2100	4000	22	4.5	2.5	125	50
143	195	223	52	3.0	P831_0070KX701_0030 MF EZ503U	849	849	1804	21.00	21/1	2100	2100	4000	21	4.5	2.5	125	50
143	241	289	64	2.5	P831_0070KX701_0030 MF EZ702U	823	823	1804	21.00	21/1	2100	2100	4000	27	4.5	2.5	125	53
143	271	321	72	2.2	P831_0070KX701_0030 MF EZ505U	849	849	1804	21.00	21/1	2100	2100	4000	25	4.5	2.5	125	53
143	331	417	88	1.8	P831_0070KX701_0030 MF EZ703U	849	849	1804	21.00	21/1	2100	2100	4000	35	4.5	2.5	125	55
143	427	606	114	1.4	P831_0070KX701_0030 MF EZ705U	849	849	1804	21.00	21/1	2100	2100	4000	47	4.5	2.5	125	60
150	185	212	47	4.6	P831_0100KX701_0020 MF EZ503U	822	822	2577	20.00	20/1	1800	1800	3500	23	4.0	2.0	130	50
150	229	275	58	3.7	P831_0100KX701_0020 MF EZ702U	783	783	2577	20.00	20/1	1800	1800	3500	29	4.0	2.0	130	53
150	258	306	65	3.3	P831_0100KX701_0020 MF EZ505U	1213	1213	2577	20.00	20/1	1800	1800	3500	28	4.0	2.0	130	53
150	315	397	80	2.7	P831_0100KX701_0020 MF EZ703U	1213	1213	2577	20.00	20/1	1800	1800	3500	37	4.0	2.0	130	55
150	407	577	103	2.1	P831_0100KX701_0020 MF EZ705U	1213	1213	2577	20.00	20/1	1800	1800	3500	49	4.0	2.0	130	60
188	148	170	47	4.6	P831_0080KX701_0020 MF EZ503U	657	657	2062	16.00	16/1	1800	1800	3500	23	4.5	2.5	128	50
188	183	220	58	3.7	P831_0080KX701_0020 MF EZ702U	627	627	2062	16.00	16/1	1800	1800	3500	29	4.5	2.5	128	53
188	206	245	65	3.3	P831_0080KX701_0020 MF EZ505U	970	970	2062	16.00	16/1	1800	1800	3500	28	4.5	2.5	128	53
188	252	318	80	2.7	P831_0080KX701_0020 MF EZ703U	970	970	2062	16.00	16/1	1800	1800	3500	37	4.5	2.5	128	55
188	326	462	103	2.1	P831_0080KX701_0020 MF EZ705U	970	970	2062	16.00	16/1	1800	1800	3500	50	4.5	2.5	128	60
200	106	115	40	4.0	P831_0050KX701_0030 MF EZ502U	444	444	1289	15.00	15/1	2100	2100	4000	19	5.0	3.0	104	49
200	106	119	40	4.0	P831_0050KX701_0030 MF EZ701U	287	287	1289	15.00	15/1	2100	2100	4000	22	5.0	3.0	104	50
200	139	159	52	3.0	P831_0050KX701_0030 MF EZ503U	606	606	1289	15.00	15/1	2100	2100	4000	21	5.0	3.0	104	50
200	172	206	64	2.5	P831_0050KX701_0030 MF EZ702U	588	588	1289	15.00	15/1	2100	2100	4000	27	5.0	3.0	104	53
200	193	229	72	2.2	P831_0050KX701_0030 MF EZ505U	606	606	1289	15.00	15/1	2100	2100	4000	26	5.0	3.0	104	53
200	236	298	88	1.8	P831_0050KX701_0030 MF EZ703U	606	606	1289	15.00	15/1	2100	2100	4000	35	5.0	3.0	104	55
200	305	433	114	1.4	P831_0050KX701_0030 MF EZ705U	606	606	1289	15.00	15/1	2100	2100	4000	48	5.0	3.0	104	60
214	130	148	47	4.6	P831_0070KX701_0020 MF EZ503U	575	575	1804	14.00	14/1	1800	1800	3500	24	4.5	2.5	125	50
214	161	193	58	3.7	P831_0070KX701_0020 MF EZ702U	548	548	1804	14.00	14/1	1800	1800	3500	30	4.5	2.5	125	53
214	181	214	65	3.3	P831_0070KX701_0020 MF EZ505U	849	849	1804	14.00	14/1	1800	1800	3500	28	4.5	2.5	125	53
214	221	278	80	2.7	P831_0070KX701_0020 MF EZ703U	849	849	1804	14.00	14/1	1800	1800	3500	38	4.5	2.5	125	55
214	285	404	103	2.1	P831_0070KX701_0020 MF EZ705U	849	849	1804	14.00	14/1	1800	1800	3500	50	4.5	2.5	125	60
250	85	92	40	4.0	P831_0040KX701_0030 MF EZ502U	355	355	1031	12.00	12/1	2100	2100	4000	20	5.5	3.5	84	49
250	85	95	40	4.0	P831_0040KX701_0030 MF EZ701U	229	229	1031	12.00	12/1	2100	2100	4000	23	5.5	3.5	84	50
250	111	127	52	3.0	P831_0040KX701_0030 MF EZ503U	485	485	1031	12.00	12/1	2100	2100	4000	22	5.5	3.5	84	50
250	138	165	64	2.5	P831_0040KX701_0030 MF EZ702U	470	470	1031	12.00	12/1	2100	2100	4000	28	5.5	3.5	84	53
250	155	183	72	2.2	P831_0040KX701_0030 MF EZ505U	485	485	1031	12.00	12/1	2100	2100	4000	27	5.5	3.5	84	53
250	189	238	88	1.8	P831_0040KX701_0030 MF EZ703U	485	485	1031	12.00	12/1	2100	2100	4000	36	5.5	3.5	84	55
250	244	346	114	1.4	P831_0040KX701_0030 MF EZ705U	485	485	1031	12.00	12/1	2100	2100	4000	48	5.5	3.5	84	60
300	158	199	84	4.3	P831_0100KX701_0010 MF EZ703U	621	621	2268	10.00	10/1	1800	1600	3000	49	4.0	2.0	130	55
300	204	289	109	3.3	P831_0100KX701_0010 MF EZ705U	994	994	2268	10.00	10/1	1800	1600	3000	62	4.0	2.0	130	60
375	163	231	86	4.2	P831_0080KX701_0010 MF EZ705U	795	795	1814	8.000	8/1	1800	1600	3000	63	4.5	2.5	128	60
429	142	202	86	4.2	P831_0070KX701_0010 MF EZ705U	696	696	1588	7.000	7/1	1800	1600	3000	65	4.5	2.5	125	60
500	56	64	47	4.6	P831_0030KX701_0020 MF EZ503U	247	247	773	6.000	6/1	1800	1800	3500	33	6.5	4.5	59	50
500	69	83	58	3.7	P831_0030KX701_0020 MF EZ702U	235	235	773	6.000	6/1	1800	1800	3500	39	6.5	4.5	59	53
500	77	92	65	3.3	P831_0030KX701_0020 MF EZ505U	364	364	773	6.000	6/1	1800	1800	3500	37	6.5	4.5	59	53
500	95	119	80	2.7	P831_0030KX701_0020 MF EZ703U	364	364	773	6.000	6/1	1800	1800	3500	47	6.5	4.5	59	55
500	122	173	103	2.1	P831_0030KX701_0020 MF EZ705U	364	364	773	6.000	6/1	1800	1800	3500	59	6.5	4.5	59	60
600	102	144	86	4.2	P831_0050KX701_0010 MF EZ705U	497	497	1134	5.000	5/1	1800	1600	3000	70	5.0	3.0	104	60
750	81	115	86	4.2	P831_0040KX701_0010 MF EZ705U	397	397	907	4.000	4/1	1800	1600	3000	77	5.5	3.5	84	60
1000	61	87	86	4.2	P831_0030KX701_0010 MF EZ705U	298	298	680	3.000	3/1	1800	1600	3000	101	6.5	4.5	59	60
P831KX (n_{1N} = 4000 min^{-1}, $M_{2acc,max}$ = 1210 Nm)																		
133	722	1253	148	1.1	P831_0100KX701_0030 MF EZ813U	1213	1213	2577	30.00	30/1	2100	2100	4000	117	4.0	2.0	130	78
133	748	1924	153	1.0	P831_0100KX701_0030 MF EZ815U	1213	1213	2577	30.00	30/1	2100	2100	4000	180	4.0	2.0	130	90
167	578	1002	148	1.1	P831_0080KX701_0030 MF EZ813U	970	970	2062	24.00	24/1	2100	2100	4000	117	4.5	2.5	128	78
167	599	1540	153	1.0	P831_0080KX701_0030 MF EZ815U	970	970	2062	24.00	24/1	2100	2100	4000	180	4.5	2.5	128	90
190	506	877	148	1.1	P831_0070KX701_0030 MF EZ813U	849	849	1804	21.00	21/1	2100	2100	4000	117	4.5	2.5	125	78
190	524	1347	153	1.0	P831_0070KX701_0030 MF EZ815U	849	849	1804	21.00	21/1	2100	2100	4000	181	4.5	2.5	125	90
267	361	626	148	1.1	P831_0050KX701_0030 MF EZ813U	606	606	1289	15.00	15/1	2100	2100	4000	118	5.0	3.0	104	78
267	374	962	153	1.0	P831_0050KX701_0030 MF EZ815U	606	606	1289	15.00	15/1	2100	2100	4000	181	5.0	3.0	104	90
333	289	501	148	1.1	P831_0040KX701_0030 MF EZ813U	485	485	1031	12.00	12/1	2100	2100	4000	119	5.5	3.5	84	78
333	299	770	153	1.0	P831_0040KX701_0030 MF EZ815U	485	485	1031	12.00	12/1	2100	2100	4000	182	5.5	3.5	84	90
P832KX (n_{1N} = 2000 min^{-1}, $M_{2acc,max}$ = 1840 Nm)																		
57	1277	1432	325	1.1	P832_0350KX701_0010 MF EZ813U	1840	2000	3230	35.00	35/1	1800	1600	3000	131	4.5	2.5	173	83

n_{2N} [rpm]	M_{2N} [Nm]	$M_{2,0}$ [Nm]	a_{th}	S	Type	M_{2acc} [Nm]	M_{2accHT} [Nm]	M_{2NOT} [Nm]	i	i_{exakt}	n_{1maxDB} EL1,2,5,6 [rpm]	n_{1maxDB} EL3,4 [rpm]	n_{1maxZB} [rpm]	J_1 [kgcm²]	$\Delta\varphi_2$ [arcmin]	$\Delta\varphi_{2red}$ [arcmin]	C_2 [Nm/ arcmin]	m [kg]
P832KX (n_{1N} = 3000 min^{-1}, $M_{2acc,max}$ = 1840 Nm)																		
14	845	924	108	1.5	P832_0700KX701_0030 MF EZ501U	1610	1610	3220	210.0	210/1	2100	2100	4000	15	4.0	2.0	163	52
15	805	880	170	1.3	P832_1000KX701_0020 MF EZ501U	1320	1320	2640	200.0	200/1	1800	1800	3500	18	4.0	2.0	148	52
20	604	660	67	2.3	P832_0500KX701_0030 MF EZ501U	1840	2000	3230	150.0	150/1	2100	2100	4000	15	4.0	2.0	172	52
20	1039	1123	116	1.4	P832_0500KX701_0030 MF EZ502U	1840	2000	3230	150.0	150/1	2100	2100	4000	18	4.0	2.0	172	53
20	1039	1165	116	1.4	P832_0500KX701_0030 MF EZ701U	1840	2000	3230	150.0	150/1	2100	2100	4000	21	4.0	2.0	172	55
20	1362	1558	152	1.0	P832_0500KX701_0030 MF EZ503U	1840	2000	3230	150.0	150/1	2100	2100	4000	20	4.0	2.0	172	55
21	563	616	97	2.2	P832_0700KX701_0020 MF EZ501U	1610	1610	3220	140.0	140/1	1800	1800	3500	18	4.0	2.0	163	52
21	969	1048	167	1.3	P832_0700KX701_0020 MF EZ502U	1610	1610	3220	140.0	140/1	1800	1800	3500	20	4.0	2.0	163	53
21	969	1087	167	1.3	P832_0700KX701_0020 MF EZ701U	1610	1610	3220	140.0	140/1	1800	1800	3500	23	4.0	2.0	163	55
25	483	528	70	2.3	P832_0400KX701_0030 MF EZ501U	1600	1600	3200	120.0	120/1	2100	2100	4000	15	4.5	2.5	166	52
25	831	898	120	1.3	P832_0400KX701_0030 MF EZ502U	1600	1600	3200	120.0	120/1	2100	2100	4000	18	4.5	2.5	166	53
25	831	932	120	1.3	P832_0400KX701_0030 MF EZ701U	1600	1600	3200	120.0	120/1	2100	2100	4000	21	4.5	2.5	166	55
25	1089	1246	157	1.0	P832_0400KX701_0030 MF EZ503U	1600	1600	3200	120.0	120/1	2100	2100	4000	20	4.5	2.5	166	55
29	422	462	47	3.4	P832_0350KX701_0030 MF EZ501U	1572	1572	3230	105.0	105/1	2100	2100	4000	15	4.5	2.5	173	52
29	727	786	81	1.9	P832_0350KX701_0030 MF EZ502U	1840	2000	3230	105.0	105/1	2100	2100	4000	18	4.5	2.5	173	53
29	727	816	81	1.9	P832_0350KX701_0030 MF EZ701U	1840	1965	3230	105.0	105/1	2100	2100	4000	21	4.5	2.5	173	55
29	953	1091	106	1.5	P832_0350KX701_0030 MF EZ503U	1840	2000	3230	105.0	105/1	2100	2100	4000	20	4.5	2.5	173	55
29	1179	1415	132	1.2	P832_0350KX701_0030 MF EZ702U	1840	2000	3230	105.0	105/1	2100	2100	4000	26	4.5	2.5	173	58
29	1326	1572	148	1.1	P832_0350KX701_0030 MF EZ505U	1840	2000	3230	105.0	105/1	2100	2100	4000	25	4.5	2.5	173	58
30	402	440	61	3.5	P832_0500KX701_0020 MF EZ501U	1497	1497	3230	100.0	100/1	1800	1800	3500	18	4.0	2.0	172	52
30	692	749	105	2.0	P832_0500KX701_0020 MF EZ502U	1840	2000	3230	100.0	100/1	1800	1800	3500	20	4.0	2.0	172	53
30	692	777	105	2.0	P832_0500KX701_0020 MF EZ701U	1840	1872	3230	100.0	100/1	1800	1800	3500	23	4.0	2.0	172	55
30	908	1039	137	1.6	P832_0500KX701_0020 MF EZ503U	1840	2000	3230	100.0	100/1	1800	1800	3500	22	4.0	2.0	172	55
30	1123	1347	170	1.3	P832_0500KX701_0020 MF EZ702U	1840	2000	3230	100.0	100/1	1800	1800	3500	29	4.0	2.0	172	58
30	1263	1497	191	1.1	P832_0500KX701_0020 MF EZ505U	1840	2000	3230	100.0	100/1	1800	1800	3500	27	4.0	2.0	172	58
36	338	369	49	3.3	P832_0280KX701_0030 MF EZ501U	1258	1258	3200	84.00	84/1	2100	2100	4000	15	4.5	2.5	168	52
36	582	629	84	1.9	P832_0280KX701_0030 MF EZ502U	1600	1600	3200	84.00	84/1	2100	2100	4000	18	4.5	2.5	168	53
36	582	652	84	1.9	P832_0280KX701_0030 MF EZ701U	1572	1572	3200	84.00	84/1	2100	2100	4000	21	4.5	2.5	168	55
36	762	872	109	1.4	P832_0280KX701_0030 MF EZ503U	1600	1600	3200	84.00	84/1	2100	2100	4000	20	4.5	2.5	168	55
36	943	1132	135	1.2	P832_0280KX701_0030 MF EZ702U	1600	1600	3200	84.00	84/1	2100	2100	4000	26	4.5	2.5	168	58
36	1061	1258	152	1.0	P832_0280KX701_0030 MF EZ505U	1600	1600	3200	84.00	84/1	2100	2100	4000	25	4.5	2.5	168	58
38	322	352	63	3.4	P832_0400KX701_0020 MF EZ501U	1198	1198	3200	80.00	80/1	1800	1800	3500	18	4.5	2.5	166	52
38	554	599	108	2.0	P832_0400KX701_0020 MF EZ502U	1600	1600	3200	80.00	80/1	1800	1800	3500	20	4.5	2.5	166	53
38	554	621	108	2.0	P832_0400KX701_0020 MF EZ701U	1497	1497	3200	80.00	80/1	1800	1800	3500	23	4.5	2.5	166	55
38	726	831	142	1.5	P832_0400KX701_0020 MF EZ503U	1600	1600	3200	80.00	80/1	1800	1800	3500	22	4.5	2.5	166	55
38	898	1078	175	1.2	P832_0400KX701_0020 MF EZ702U	1600	1600	3200	80.00	80/1	1800	1800	3500	29	4.5	2.5	166	58
38	1011	1198	197	1.1	P832_0400KX701_0020 MF EZ505U	1600	1600	3200	80.00	80/1	1800	1800	3500	27	4.5	2.5	166	58
40	302	330	37	4.3	P832_0250KX701_0030 MF EZ501U	1123	1123	3230	75.00	75/1	2100	2100	4000	16	4.5	2.5	172	52
40	519	561	63	2.5	P832_0250KX701_0030 MF EZ502U	1840	2000	3230	75.00	75/1	2100	2100	4000	18	4.5	2.5	172	53
40	519	583	63	2.5	P832_0250KX701_0030 MF EZ701U	1404	1404	3230	75.00	75/1	2100	2100	4000	21	4.5	2.5	172	55
40	681	779	83	1.9	P832_0250KX701_0030 MF EZ503U	1840	2000	3230	75.00	75/1	2100	2100	4000	20	4.5	2.5	172	55
40	842	1011	102	1.5	P832_0250KX701_0030 MF EZ702U	1840	2000	3230	75.00	75/1	2100	2100	4000	26	4.5	2.5	172	58
40	947	1123	115	1.4	P832_0250KX701_0030 MF EZ505U	1840	2000	3230	75.00	75/1	2100	2100	4000	25	4.5	2.5	172	58
40	1158	1460	141	1.1	P832_0250KX701_0030 MF EZ703U	1840	2000	3230	75.00	75/1	2100	2100	4000	34	4.5	2.5	172	60
43	485	524	73	2.9	P832_0350KX701_0020 MF EZ502U	1840	2000	3230	70.00	70/1	1800	1800	3500	20	4.5	2.5	173	53
43	485	544	73	2.9	P832_0350KX701_0020 MF EZ701U	1310	1310	3230	70.00	70/1	1800	1800	3500	24	4.5	2.5	173	55
43	635	727	96	2.2	P832_0350KX701_0020 MF EZ503U	1840	2000	3230	70.00	70/1	1800	1800	3500	23	4.5	2.5	173	55
43	786	943	119	1.8	P832_0350KX701_0020 MF EZ702U	1840	2000	3230	70.00	70/1	1800	1800	3500	29	4.5	2.5	173	58
43	884	1048	134	1.6	P832_0350KX701_0020 MF EZ505U	1840	2000	3230	70.00	70/1	1800	1800	3500	27	4.5	2.5	173	58
43	1081	1362	163	1.3	P832_0350KX701_0020 MF EZ703U	1840	2000	3230	70.00	70/1	1800	1800	3500	37	4.5	2.5	173	60
43	1395	1978	211	1.0	P832_0350KX701_0020 MF EZ705U	1840	2000	3230	70.00	70/1	1800	1800	3500	49	4.5	2.5	173	65
47	258	281	47	4.6	P832_0320KX701_0020 MF EZ501U	958	958	3049	64.00	64/1	1800	1800	3500	19	4.5	2.5	157	52
47	443	479	81	2.6	P832_0320KX701_0020 MF EZ502U	1525	1595	3049	64.00	64/1	1800	1800	3500	21	4.5	2.5	157	53
47	443	497	81	2.6	P832_0320KX701_0020 MF EZ701U	1198	1198	3049	64.00	64/1	1800	1800	3500	24	4.5	2.5	157	55
47	581	665	106	2.0	P832_0320KX701_0020 MF EZ503U	1525	1595	3049	64.00	64/1	1800	1800	3500	23	4.5	2.5	157	55
47	719	862	131	1.6	P832_0320KX701_0020 MF EZ702U	1525	1595	3049	64.00	64/1	1800	1800	3500	29	4.5	2.5	157	58
47	808	958	148	1.5	P832_0320KX701_0020 MF EZ505U	1525	1595	3049	64.00	64/1	1800	1800	3500	28	4.5	2.5	157	58
47	988	1246	180	1.2	P832_0320KX701_0020 MF EZ703U	1525	1595	3049	64.00	64/1	1800	1800	3500	37	4.5	2.5	157	60
50	415	449	52	3.0	P832_0200KX701_0030 MF EZ502U	1740	1740	3230	60.00	60/1	2100	2100	4000	18	4.5	2.5	169	53
50	415	466	52	3.0	P832_0200KX701_0030 MF EZ701U	1123	1123	3230	60.00	60/1	2100	2100	4000	21	4.5	2.5	169	55
50	545	623	69	2.3	P832_0200KX701_0030 MF EZ503U	1840	2000	3230	60.00	60/1	2100	2100	4000	20	4.5	2.5	169	55
50	674	808	85	1.9	P832_0200KX701_0030 MF EZ702U	1840	2000	3230	60.00	60/1	2100	2100	4000	27	4.5	2.5	169	58
50	758	898	96	1.6	P832_0200KX701_0030 MF EZ505U	1840	2000	3230	60.00	60/1	2100	2100	4000	25	4.5	2.5	169	58
50	926	1168	117	1.3	P832_0200KX701_0030 MF EZ703U	1840	2000	3230	60.00	60/1	2100	2100	4000	34	4.5	2.5	169	60

n_{2N} [rpm]	M_{2N} [Nm]	$M_{2,0}$ [Nm]	a_{th}	S	Type	M_{2acc} [Nm]	M_{2accHT} [Nm]	M_{2NOT} [Nm]	i	i_{exakt}	n_{1maxDB} EL1,2,5,6 [rpm]	n_{1maxDB} EL3,4 [rpm]	n_{1maxZB} [rpm]	J_1 [kgcm²]	$\Delta\varphi_2$ [arcmin]	$\Delta\varphi_{2red}$ [arcmin]	C_2 [Nm/arcmin]	m [kg]
P832KX (n_{1N} = 3000 min^{-1}, $M_{2acc,max}$ = 1840 Nm)																		
50	1196	1696	151	1.0	P832_0200KX701_0030 MF EZ705U	1840	2000	3230	60.00	60/1	2100	2100	4000	47	4.5	2.5	169	65
54	225	246	44	4.9	P832_0280KX701_0020 MF EZ501U	838	838	3200	56.00	56/1	1800	1800	3500	18	4.5	2.5	168	52
54	388	419	75	2.8	P832_0280KX701_0020 MF EZ502U	1600	1600	3200	56.00	56/1	1800	1800	3500	20	4.5	2.5	168	53
54	388	435	75	2.8	P832_0280KX701_0020 MF EZ701U	1048	1048	3200	56.00	56/1	1800	1800	3500	24	4.5	2.5	168	55
54	508	582	99	2.2	P832_0280KX701_0020 MF EZ503U	1600	1600	3200	56.00	56/1	1800	1800	3500	23	4.5	2.5	168	55
54	629	755	122	1.7	P832_0280KX701_0020 MF EZ702U	1600	1600	3200	56.00	56/1	1800	1800	3500	29	4.5	2.5	168	58
54	707	838	138	1.6	P832_0280KX701_0020 MF EZ505U	1600	1600	3200	56.00	56/1	1800	1800	3500	27	4.5	2.5	168	58
54	865	1090	168	1.3	P832_0280KX701_0020 MF EZ703U	1600	1600	3200	56.00	56/1	1800	1800	3500	37	4.5	2.5	168	60
60	346	374	57	3.8	P832_0250KX701_0020 MF EZ502U	1450	1450	3230	50.00	50/1	1800	1800	3500	21	4.5	2.5	172	53
60	346	388	57	3.8	P832_0250KX701_0020 MF EZ701U	936	936	3230	50.00	50/1	1800	1800	3500	24	4.5	2.5	172	55
60	454	519	75	2.9	P832_0250KX701_0020 MF EZ503U	1840	2000	3230	50.00	50/1	1800	1800	3500	23	4.5	2.5	172	55
60	561	674	92	2.3	P832_0250KX701_0020 MF EZ702U	1840	1918	3230	50.00	50/1	1800	1800	3500	29	4.5	2.5	172	58
60	632	749	104	2.1	P832_0250KX701_0020 MF EZ505U	1840	2000	3230	50.00	50/1	1800	1800	3500	27	4.5	2.5	172	58
60	772	973	127	1.7	P832_0250KX701_0020 MF EZ703U	1840	2000	3230	50.00	50/1	1800	1800	3500	37	4.5	2.5	172	60
60	997	1413	164	1.3	P832_0250KX701_0020 MF EZ705U	1840	2000	3230	50.00	50/1	1800	1800	3500	49	4.5	2.5	172	65
75	277	299	47	4.5	P832_0200KX701_0020 MF EZ502U	1160	1160	3230	40.00	40/1	1800	1800	3500	21	4.5	2.5	169	53
75	277	311	47	4.5	P832_0200KX701_0020 MF EZ701U	749	749	3230	40.00	40/1	1800	1800	3500	24	4.5	2.5	169	55
75	363	415	62	3.4	P832_0200KX701_0020 MF EZ503U	1609	1609	3230	40.00	40/1	1800	1800	3500	23	4.5	2.5	169	55
75	449	539	77	2.8	P832_0200KX701_0020 MF EZ702U	1535	1535	3230	40.00	40/1	1800	1800	3500	29	4.5	2.5	169	58
75	505	599	87	2.5	P832_0200KX701_0020 MF EZ505U	1840	2000	3230	40.00	40/1	1800	1800	3500	28	4.5	2.5	169	58
75	618	779	106	2.0	P832_0200KX701_0020 MF EZ703U	1840	2000	3230	40.00	40/1	1800	1800	3500	37	4.5	2.5	169	60
75	797	1130	137	1.6	P832_0200KX701_0020 MF EZ705U	1840	2000	3230	40.00	40/1	1800	1800	3500	50	4.5	2.5	169	65
86	318	364	91	4.0	P832_0350KX701_0010 MF EZ503U	1408	1408	3230	35.00	35/1	1800	1600	3000	34	4.5	2.5	173	55
86	393	472	112	3.2	P832_0350KX701_0010 MF EZ702U	1343	1343	3230	35.00	35/1	1800	1600	3000	40	4.5	2.5	173	58
86	442	524	126	2.8	P832_0350KX701_0010 MF EZ505U	1840	2000	3230	35.00	35/1	1800	1600	3000	38	4.5	2.5	173	58
86	540	681	155	2.3	P832_0350KX701_0010 MF EZ703U	1840	2000	3230	35.00	35/1	1800	1600	3000	48	4.5	2.5	173	60
86	698	989	199	1.8	P832_0350KX701_0010 MF EZ705U	1840	2000	3230	35.00	35/1	1800	1600	3000	60	4.5	2.5	173	65
94	222	240	43	5.0	P832_0160KX701_0020 MF EZ502U	928	928	3200	32.00	32/1	1800	1800	3500	21	4.5	2.5	163	53
94	222	249	43	5.0	P832_0160KX701_0020 MF EZ701U	599	599	3200	32.00	32/1	1800	1800	3500	24	4.5	2.5	163	55
94	290	332	57	3.8	P832_0160KX701_0020 MF EZ503U	1288	1288	3200	32.00	32/1	1800	1800	3500	23	4.5	2.5	163	55
94	359	431	70	3.1	P832_0160KX701_0020 MF EZ702U	1228	1228	3200	32.00	32/1	1800	1800	3500	30	4.5	2.5	163	58
94	404	479	79	2.7	P832_0160KX701_0020 MF EZ505U	1600	1600	3200	32.00	32/1	1800	1800	3500	28	4.5	2.5	163	58
94	494	623	96	2.2	P832_0160KX701_0020 MF EZ703U	1600	1600	3200	32.00	32/1	1800	1800	3500	37	4.5	2.5	163	60
94	638	904	124	1.7	P832_0160KX701_0020 MF EZ705U	1600	1600	3200	32.00	32/1	1800	1800	3500	50	4.5	2.5	163	65
P932KX (n_{1N} = 2000 min^{-1}, $M_{2acc,max}$ = 3300 Nm)																		
36	2043	2292	192	1.1	P932_0280KX701_0020 MF EZ813U	3000	–	6000	56.00	56/1	1800	1800	3500	121	4.5	–	381	108
40	1824	2046	164	1.3	P932_0250KX701_0020 MF EZ813U	2969	–	6579	50.00	50/1	1800	1800	3500	122	4.5	–	381	108
50	1459	1637	164	1.3	P932_0200KX701_0020 MF EZ813U	2375	–	5263	40.00	40/1	1800	1800	3500	124	4.5	–	368	108
57	1277	1432	193	1.9	P932_0350KX701_0010 MF EZ813U	3300	–	6600	35.00	35/1	1800	1600	3000	135	4.5	–	391	108
57	1891	2252	287	1.3	P932_0350KX701_0010 MF EZ815U	3300	–	6600	35.00	35/1	1800	1600	3000	198	4.5	–	391	120
63	1168	1309	164	1.3	P932_0160KX701_0020 MF EZ813U	1900	–	4211	32.00	32/1	1800	1800	3500	124	4.5	–	348	108
71	1022	1146	161	2.2	P932_0280KX701_0010 MF EZ813U	3000	–	6000	28.00	28/1	1800	1600	3000	135	4.5	–	381	108
71	1513	1802	239	1.5	P932_0280KX701_0010 MF EZ815U	3000	–	6000	28.00	28/1	1800	1600	3000	198	4.5	–	381	120
80	912	1023	138	2.6	P932_0250KX701_0010 MF EZ813U	2969	–	5789	25.00	25/1	1800	1600	3000	140	4.5	–	381	108
80	1351	1609	205	1.8	P932_0250KX701_0010 MF EZ815U	2969	–	5789	25.00	25/1	1800	1600	3000	203	4.5	–	381	120
100	730	818	138	2.6	P932_0200KX701_0010 MF EZ813U	2375	–	4632	20.00	20/1	1800	1600	3000	148	4.5	–	368	108
100	1081	1287	205	1.8	P932_0200KX701_0010 MF EZ815U	2375	–	4632	20.00	20/1	1800	1600	3000	211	4.5	–	368	120
125	584	655	138	2.6	P932_0160KX701_0010 MF EZ813U	1900	–	3705	16.00	16/1	1800	1600	3000	149	4.5	–	348	108
125	865	1029	205	1.8	P932_0160KX701_0010 MF EZ815U	1900	–	3705	16.00	16/1	1800	1600	3000	212	4.5	–	348	120
P932KX (n_{1N} = 3000 min^{-1}, $M_{2acc,max}$ = 3300 Nm)																		
10	1207	1319	113	1.4	P932_1000KX701_0030 MF EZ501U	2200	–	4400	300.0	300/1	2100	2100	4000	16	4.0	–	320	77
14	845	924	56	2.8	P932_0700KX701_0030 MF EZ501U	3144	–	6312	210.0	210/1	2100	2100	4000	16	4.0	–	369	77
14	1454	1572	96	1.6	P932_0700KX701_0030 MF EZ502U	3156	–	6312	210.0	210/1	2100	2100	4000	18	4.0	–	369	78
14	1454	1631	96	1.6	P932_0700KX701_0030 MF EZ701U	3156	–	6312	210.0	210/1	2100	2100	4000	21	4.0	–	369	80
14	1906	2181	126	1.3	P932_0700KX701_0030 MF EZ503U	3156	–	6312	210.0	210/1	2100	2100	4000	20	4.0	–	369	80
14	2358	2830	156	1.0	P932_0700KX701_0030 MF EZ702U	3156	–	6312	210.0	210/1	2100	2100	4000	26	4.0	–	369	83
15	805	880	102	2.1	P932_1000KX701_0020 MF EZ501U	2200	–	4400	200.0	200/1	1800	1800	3500	18	4.0	–	320	77
15	1385	1497	175	1.2	P932_1000KX701_0020 MF EZ502U	2200	–	4400	200.0	200/1	1800	1800	3500	21	4.0	–	320	78
15	1385	1553	175	1.2	P932_1000KX701_0020 MF EZ701U	2200	–	4400	200.0	200/1	1800	1800	3500	24	4.0	–	320	80
20	604	660	42	3.8	P932_0500KX701_0030 MF EZ501U	2246	–	6400	150.0	150/1	2100	2100	4000	16	4.0	–	393	77
20	1039	1123	71	2.2	P932_0500KX701_0030 MF EZ502U	3200	–	6400	150.0	150/1	2100	2100	4000	18	4.0	–	393	78
20	1039	1165	71	2.2	P932_0500KX701_0030 MF EZ701U	2807	–	6400	150.0	150/1	2100	2100	4000	21	4.0	–	393	80
20	1362	1558	94	1.7	P932_0500KX701_0030 MF EZ503U	3200	–	6400	150.0	150/1	2100	2100	4000	20	4.0	–	393	80
20	1684	2021	116	1.4	P932_0500KX701_0030 MF EZ702U	3200	–	6400	150.0	150/1	2100	2100	4000	26	4.0	–	393	83

n_{2N} [rpm]	M_{2N} [Nm]	$M_{2,0}$ [Nm]	a_{th}	S	Type	M_{2acc} [Nm]	M_{2accHT} [Nm]	M_{2NOT} [Nm]	i	i_{exakt}	n_{1maxDB} EL1,2,5,6 [rpm]	n_{1maxDB} EL3,4 [rpm]	n_{1maxZB} [rpm]	J_1 [kgcm²]	$\Delta\varphi_2$ [arcmin]	$\Delta\varphi_{2red}$ [arcmin]	C_2 [Nm/ arcmin]	m [kg]
P932KX (n_{1N} = 3000 min^{-1}, $M_{2acc,max}$ = 3300 Nm)																		
20	1895	2246	130	1.2	P932_0500KX701_0030 MF EZ505U	3200	–	6400	150.0	150/1	2100	2100	4000	25	4.0	–	393	83
21	563	616	51	4.2	P932_0700KX701_0020 MF EZ501U	2096	–	6312	140.0	140/1	1800	1800	3500	18	4.0	–	369	77
21	969	1048	87	2.5	P932_0700KX701_0020 MF EZ502U	3156	–	6312	140.0	140/1	1800	1800	3500	21	4.0	–	369	78
21	969	1087	87	2.5	P932_0700KX701_0020 MF EZ701U	2620	–	6312	140.0	140/1	1800	1800	3500	24	4.0	–	369	80
21	1271	1454	114	1.9	P932_0700KX701_0020 MF EZ503U	3156	–	6312	140.0	140/1	1800	1800	3500	23	4.0	–	369	80
21	1572	1886	141	1.5	P932_0700KX701_0020 MF EZ702U	3156	–	6312	140.0	140/1	1800	1800	3500	29	4.0	–	369	83
21	1769	2096	159	1.4	P932_0700KX701_0020 MF EZ505U	3156	–	6312	140.0	140/1	1800	1800	3500	28	4.0	–	369	83
21	2162	2725	194	1.1	P932_0700KX701_0020 MF EZ703U	3156	–	6312	140.0	140/1	1800	1800	3500	37	4.0	–	369	85
25	483	528	38	4.1	P932_0400KX701_0030 MF EZ501U	1797	–	6000	120.0	120/1	2100	2100	4000	16	4.5	–	384	77
25	831	898	66	2.4	P932_0400KX701_0030 MF EZ502U	3000	–	6000	120.0	120/1	2100	2100	4000	18	4.5	–	384	78
25	831	932	66	2.4	P932_0400KX701_0030 MF EZ701U	2246	–	6000	120.0	120/1	2100	2100	4000	21	4.5	–	384	80
25	1089	1246	86	1.8	P932_0400KX701_0030 MF EZ503U	3000	–	6000	120.0	120/1	2100	2100	4000	20	4.5	–	384	80
25	1347	1617	106	1.5	P932_0400KX701_0030 MF EZ702U	3000	–	6000	120.0	120/1	2100	2100	4000	26	4.5	–	384	83
25	1516	1797	120	1.3	P932_0400KX701_0030 MF EZ505U	3000	–	6000	120.0	120/1	2100	2100	4000	25	4.5	–	384	83
25	1853	2336	146	1.1	P932_0400KX701_0030 MF EZ703U	3000	–	6000	120.0	120/1	2100	2100	4000	34	4.5	–	384	85
29	727	786	48	3.3	P932_0350KX701_0030 MF EZ502U	3046	–	6600	105.0	105/1	2100	2100	4000	18	4.5	–	391	78
29	727	816	48	3.3	P932_0350KX701_0030 MF EZ701U	1965	–	6600	105.0	105/1	2100	2100	4000	22	4.5	–	391	80
29	953	1091	63	2.5	P932_0350KX701_0030 MF EZ503U	3300	–	6600	105.0	105/1	2100	2100	4000	21	4.5	–	391	80
29	1179	1415	78	2.0	P932_0350KX701_0030 MF EZ702U	3300	–	6600	105.0	105/1	2100	2100	4000	27	4.5	–	391	83
29	1326	1572	88	1.8	P932_0350KX701_0030 MF EZ505U	3300	–	6600	105.0	105/1	2100	2100	4000	25	4.5	–	391	83
29	1621	2044	108	1.5	P932_0350KX701_0030 MF EZ703U	3300	–	6600	105.0	105/1	2100	2100	4000	35	4.5	–	391	85
29	2093	2967	139	1.1	P932_0350KX701_0030 MF EZ705U	3300	–	6600	105.0	105/1	2100	2100	4000	47	4.5	–	391	90
30	692	749	65	3.3	P932_0500KX701_0020 MF EZ502U	2901	–	6400	100.0	100/1	1800	1800	3500	21	4.0	–	393	78
30	692	777	65	3.3	P932_0500KX701_0020 MF EZ701U	1872	–	6400	100.0	100/1	1800	1800	3500	24	4.0	–	393	80
30	908	1039	85	2.5	P932_0500KX701_0020 MF EZ503U	3200	–	6400	100.0	100/1	1800	1800	3500	23	4.0	–	393	80
30	1123	1347	105	2.0	P932_0500KX701_0020 MF EZ702U	3200	–	6400	100.0	100/1	1800	1800	3500	29	4.0	–	393	83
30	1263	1497	118	1.8	P932_0500KX701_0020 MF EZ505U	3200	–	6400	100.0	100/1	1800	1800	3500	28	4.0	–	393	83
30	1544	1946	144	1.5	P932_0500KX701_0020 MF EZ703U	3200	–	6400	100.0	100/1	1800	1800	3500	37	4.0	–	393	85
30	1993	2826	186	1.2	P932_0500KX701_0020 MF EZ705U	3200	–	6400	100.0	100/1	1800	1800	3500	49	4.0	–	393	90
36	582	629	40	3.9	P932_0280KX701_0030 MF EZ502U	2437	–	6000	84.00	84/1	2100	2100	4000	18	4.5	–	381	78
36	582	652	40	3.9	P932_0280KX701_0030 MF EZ701U	1572	–	6000	84.00	84/1	2100	2100	4000	22	4.5	–	381	80
36	762	872	53	3.0	P932_0280KX701_0030 MF EZ503U	3000	–	6000	84.00	84/1	2100	2100	4000	21	4.5	–	381	80
36	943	1132	65	2.4	P932_0280KX701_0030 MF EZ702U	3000	–	6000	84.00	84/1	2100	2100	4000	27	4.5	–	381	83
36	1061	1258	73	2.1	P932_0280KX701_0030 MF EZ505U	3000	–	6000	84.00	84/1	2100	2100	4000	25	4.5	–	381	83
36	1297	1635	90	1.8	P932_0280KX701_0030 MF EZ703U	3000	–	6000	84.00	84/1	2100	2100	4000	35	4.5	–	381	85
36	1674	2374	116	1.4	P932_0280KX701_0030 MF EZ705U	3000	–	6000	84.00	84/1	2100	2100	4000	47	4.5	–	381	90
38	554	599	59	3.6	P932_0400KX701_0020 MF EZ502U	2321	–	6000	80.00	80/1	1800	1800	3500	21	4.5	–	384	78
38	554	621	59	3.6	P932_0400KX701_0020 MF EZ701U	1497	–	6000	80.00	80/1	1800	1800	3500	24	4.5	–	384	80
38	726	831	78	2.8	P932_0400KX701_0020 MF EZ503U	3000	–	6000	80.00	80/1	1800	1800	3500	23	4.5	–	384	80
38	898	1078	96	2.2	P932_0400KX701_0020 MF EZ702U	3000	–	6000	80.00	80/1	1800	1800	3500	29	4.5	–	384	83
38	1011	1198	108	2.0	P932_0400KX701_0020 MF EZ505U	3000	–	6000	80.00	80/1	1800	1800	3500	28	4.5	–	384	83
38	1235	1557	132	1.6	P932_0400KX701_0020 MF EZ703U	3000	–	6000	80.00	80/1	1800	1800	3500	37	4.5	–	384	85
38	1595	2261	171	1.3	P932_0400KX701_0020 MF EZ705U	3000	–	6000	80.00	80/1	1800	1800	3500	49	4.5	–	384	90
40	519	561	40	4.0	P932_0250KX701_0030 MF EZ502U	2176	–	6579	75.00	75/1	2100	2100	4000	19	4.5	–	381	78
40	519	583	40	4.0	P932_0250KX701_0030 MF EZ701U	1404	–	6579	75.00	75/1	2100	2100	4000	22	4.5	–	381	80
40	681	779	52	3.0	P932_0250KX701_0030 MF EZ503U	2969	–	6579	75.00	75/1	2100	2100	4000	21	4.5	–	381	80
40	842	1011	64	2.5	P932_0250KX701_0030 MF EZ702U	2877	–	6579	75.00	75/1	2100	2100	4000	27	4.5	–	381	83
40	947	1123	72	2.2	P932_0250KX701_0030 MF EZ505U	2969	–	6579	75.00	75/1	2100	2100	4000	26	4.5	–	381	83
40	1158	1460	88	1.8	P932_0250KX701_0030 MF EZ703U	2969	–	6579	75.00	75/1	2100	2100	4000	35	4.5	–	381	85
40	1495	2119	114	1.4	P932_0250KX701_0030 MF EZ705U	2969	–	6579	75.00	75/1	2100	2100	4000	48	4.5	–	381	90
43	485	524	44	4.9	P932_0350KX701_0020 MF EZ502U	2031	–	6600	70.00	70/1	1800	1800	3500	21	4.5	–	391	78
43	485	544	44	4.9	P932_0350KX701_0020 MF EZ701U	1310	–	6600	70.00	70/1	1800	1800	3500	25	4.5	–	391	80
43	635	727	57	3.7	P932_0350KX701_0020 MF EZ503U	2817	–	6600	70.00	70/1	1800	1800	3500	24	4.5	–	391	80
43	786	943	71	3.0	P932_0350KX701_0020 MF EZ702U	2686	–	6600	70.00	70/1	1800	1800	3500	30	4.5	–	391	83
43	884	1048	80	2.7	P932_0350KX701_0020 MF EZ505U	3300	–	6600	70.00	70/1	1800	1800	3500	28	4.5	–	391	83
43	1081	1362	97	2.2	P932_0350KX701_0020 MF EZ703U	3300	–	6600	70.00	70/1	1800	1800	3500	38	4.5	–	391	85
43	1395	1978	126	1.7	P932_0350KX701_0020 MF EZ705U	3300	–	6600	70.00	70/1	1800	1800	3500	50	4.5	–	391	90
50	415	449	40	4.0	P932_0200KX701_0030 MF EZ502U	1740	–	5263	60.00	60/1	2100	2100	4000	20	4.5	–	368	78
50	415	466	40	4.0	P932_0200KX701_0030 MF EZ701U	1123	–	5263	60.00	60/1	2100	2100	4000	23	4.5	–	368	80
50	545	623	52	3.0	P932_0200KX701_0030 MF EZ503U	2375	–	5263	60.00	60/1	2100	2100	4000	22	4.5	–	368	80
50	674	808	64	2.5	P932_0200KX701_0030 MF EZ702U	2302	–	5263	60.00	60/1	2100	2100	4000	28	4.5	–	368	83
50	758	898	72	2.2	P932_0200KX701_0030 MF EZ505U	2375	–	5263	60.00	60/1	2100	2100	4000	27	4.5	–	368	83
50	926	1168	88	1.8	P932_0200KX701_0030 MF EZ703U	2375	–	5263	60.00	60/1	2100	2100	4000	36	4.5	–	368	85
50	1196	1696	114	1.4	P932_0200KX701_0030 MF EZ705U	2375	–	5263	60.00	60/1	2100	2100	4000	48	4.5	–	368	90

n_{2N} [rpm]	M_{2N} [Nm]	$M_{2,0}$ [Nm]	a_{th}	S	Type	M_{2acc} [Nm]	M_{2accHT} [Nm]	M_{2NOT} [Nm]	i	i_{exakt}	n_{1maxDB} EL1,2,5,6 [rpm]	n_{1maxDB} EL3,4 [rpm]	n_{1maxZB} [rpm]	J_1 [kgcm²]	$\Delta\varphi_2$ [arcmin]	$\Delta\varphi_{2red}$ [arcmin]	C_2 [Nm/ arcmin]	m [kg]
P932KX (n_{1N} = 3000 min^{-1}, $M_{2acc,max}$ = 3300 Nm)																		
54	508	582	48	4.5	P932_0280KX701_0020 MF EZ503U	2253	–	6000	56.00	56/1	1800	1800	3500	24	4.5	–	381	80
54	629	755	59	3.6	P932_0280KX701_0020 MF EZ702U	2148	–	6000	56.00	56/1	1800	1800	3500	30	4.5	–	381	83
54	707	838	66	3.2	P932_0280KX701_0020 MF EZ505U	3000	–	6000	56.00	56/1	1800	1800	3500	28	4.5	–	381	83
54	865	1090	81	2.6	P932_0280KX701_0020 MF EZ703U	3000	–	6000	56.00	56/1	1800	1800	3500	38	4.5	–	381	85
54	1116	1583	105	2.0	P932_0280KX701_0020 MF EZ705U	3000	–	6000	56.00	56/1	1800	1800	3500	50	4.5	–	381	90
60	454	519	47	4.6	P932_0250KX701_0020 MF EZ503U	2012	–	6579	50.00	50/1	1800	1800	3500	25	4.5	–	381	80
60	561	674	58	3.7	P932_0250KX701_0020 MF EZ702U	1918	–	6579	50.00	50/1	1800	1800	3500	31	4.5	–	381	83
60	632	749	65	3.3	P932_0250KX701_0020 MF EZ505U	2969	–	6579	50.00	50/1	1800	1800	3500	30	4.5	–	381	83
60	772	973	80	2.7	P932_0250KX701_0020 MF EZ703U	2969	–	6579	50.00	50/1	1800	1800	3500	39	4.5	–	381	85
60	997	1413	103	2.1	P932_0250KX701_0020 MF EZ705U	2969	–	6579	50.00	50/1	1800	1800	3500	51	4.5	–	381	90
75	363	415	47	4.6	P932_0200KX701_0020 MF EZ503U	1609	–	5263	40.00	40/1	1800	1800	3500	27	4.5	–	368	80
75	449	539	58	3.7	P932_0200KX701_0020 MF EZ702U	1535	–	5263	40.00	40/1	1800	1800	3500	33	4.5	–	368	83
75	505	599	65	3.3	P932_0200KX701_0020 MF EZ505U	2375	–	5263	40.00	40/1	1800	1800	3500	31	4.5	–	368	83
75	618	779	80	2.7	P932_0200KX701_0020 MF EZ703U	2375	–	5263	40.00	40/1	1800	1800	3500	41	4.5	–	368	85
75	797	1130	103	2.1	P932_0200KX701_0020 MF EZ705U	2375	–	5263	40.00	40/1	1800	1800	3500	53	4.5	–	368	90
86	540	681	82	4.4	P932_0350KX701_0010 MF EZ703U	2129	–	6600	35.00	35/1	1800	1600	3000	52	4.5	–	391	85
86	698	989	106	3.4	P932_0350KX701_0010 MF EZ705U	3300	–	6600	35.00	35/1	1800	1600	3000	64	4.5	–	391	90
94	290	332	47	4.6	P932_0160KX701_0020 MF EZ503U	1288	–	4211	32.00	32/1	1800	1800	3500	27	4.5	–	348	80
94	359	431	58	3.7	P932_0160KX701_0020 MF EZ702U	1228	–	4211	32.00	32/1	1800	1800	3500	33	4.5	–	348	83
94	404	479	65	3.3	P932_0160KX701_0020 MF EZ505U	1900	–	4211	32.00	32/1	1800	1800	3500	32	4.5	–	348	83
94	494	623	80	2.7	P932_0160KX701_0020 MF EZ703U	1900	–	4211	32.00	32/1	1800	1800	3500	41	4.5	–	348	85
94	638	904	103	2.1	P932_0160KX701_0020 MF EZ705U	1900	–	4211	32.00	32/1	1800	1800	3500	54	4.5	–	348	90
107	558	791	88	4.1	P932_0280KX701_0010 MF EZ705U	2725	–	6000	28.00	28/1	1800	1600	3000	65	4.5	–	381	90
120	498	706	86	4.2	P932_0250KX701_0010 MF EZ705U	2433	–	5789	25.00	25/1	1800	1600	3000	70	4.5	–	381	90
150	399	565	86	4.2	P932_0200KX701_0010 MF EZ705U	1946	–	4632	20.00	20/1	1800	1600	3000	77	4.5	–	368	90
188	319	452	86	4.2	P932_0160KX701_0010 MF EZ705U	1557	–	3705	16.00	16/1	1800	1600	3000	78	4.5	–	348	90
P932KX (n_{1N} = 4000 min^{-1}, $M_{2acc,max}$ = 3000 Nm)																		
48	1981	3435	148	1.1	P932_0280KX701_0030 MF EZ813U	3000	–	6000	84.00	84/1	2100	2100	4000	118	4.5	–	381	108
48	2052	5277	153	1.0	P932_0280KX701_0030 MF EZ815U	3000	–	6000	84.00	84/1	2100	2100	4000	181	4.5	–	381	120
53	1769	3067	148	1.1	P932_0250KX701_0030 MF EZ813U	2969	–	6579	75.00	75/1	2100	2100	4000	118	4.5	–	381	108
53	1832	4712	153	1.0	P932_0250KX701_0030 MF EZ815U	2969	–	6579	75.00	75/1	2100	2100	4000	181	4.5	–	381	120
67	1415	2454	148	1.1	P932_0200KX701_0030 MF EZ813U	2375	–	5263	60.00	60/1	2100	2100	4000	119	4.5	–	368	108
67	1466	3770	153	1.0	P932_0200KX701_0030 MF EZ815U	2375	–	5263	60.00	60/1	2100	2100	4000	182	4.5	–	368	120

10.3 Dimensional drawings

In this chapter you can find the dimensions of the geared motors.

There is a dimensional drawing for every possible shaft/housing design, each with the tables for gearbox dimensions, motor dimensions and geared motor dimensions.

Dimensions can exceed the specifications of ISO 2768-mK due to casting tolerances or accumulation of individual tolerances.

We reserve the right to make dimensional changes due to ongoing technical development.

You can download 3D models of our standard drives at https://configurator.stoeber.de/en-US/.

Combination options and the dimensions of forced ventilated geared motors can also be found at https://configurator.stoeber.de/en-US/.

Tolerances

Solid shaft	Tolerance
Fit	ISO k6
Feather keys	DIN 6885-1, high form A
Balancing	With half feather key

Centering holes in solid shafts in accordance with DIN 332-2, DR shape

Thread size	M4	M5	M6	M8	M10	M12	M16	M20	M24
Thread depth [mm]	10	12.5	16	19	22	28	36	42	50

10.3.1 G shaft design (solid shaft without feather key)

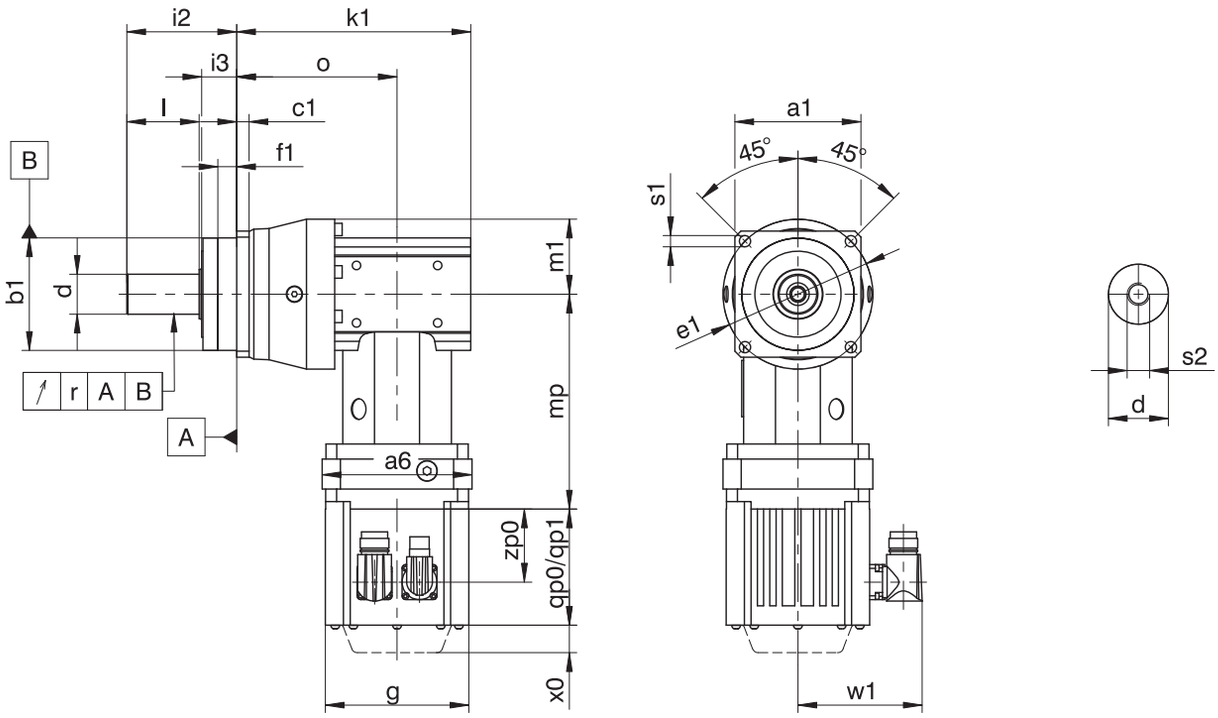

qp0	Applies to motors without brake.	qp1	Applies to motors with brake.
x0	Applies to encoders using an optical measuring method.	w1	Different for the One Cable Solution (OCS), see the chapter [▶ 17.4]
–	The radial runout specification applies only to the reinforced bearing D.		

Dimensions of gearboxes

Type	□a1	Øb1	c1	Ød	Øe1	f1	i2	i3	k1	l	m1	o	r	Øs1	s2
P231_KX301_	55	50_{h6}	6	12_{k6}	63	7.0	36	12	124.0	22	31	84.0	–	5.5	M4
P331_KX301_	72	60_{h6}	7	16_{k6}	75	7.5	48	18	131.0	28	36	91.0	0.025	5.5	M5
P332_KX301_	72	60_{h6}	7	16_{k6}	75	7.5	48	18	165.5	28	38	125.5	0.025	5.5	M5
P431_KX401_	76	70_{h6}	9	22_{k6}	85	7.5	56	18	165.0	36	49	115.0	0.025	6.6	M8
P432_KX301_	76	70_{h6}	9	22_{k6}	85	7.5	56	18	180.0	36	50	140.0	0.025	6.6	M8
P531_KX501_	101	90_{h6}	10	32_{k6}	120	15.0	88	28	187.5	58	58	128.5	0.030	9.0	M12
P532_KX401_	101	90_{h6}	10	32_{k6}	120	15.0	88	28	207.0	58	60	157.0	0.030	9.0	M12
P731_KX701_	144	130_{h6}	15	40_{k6}	165	3.5	112	27	232.5	82	75	158.5	0.035	11.0	M16
P732_KX501_	144	130_{h6}	15	40_{k6}	165	3.5	112	27	255.5	82	75	196.5	0.035	11.0	M16
P831_KX701_	190	160_{h6}	15	55_{k6}	215	10.0	112	27	267.0	82	102	193.0	0.035	13.5	M20
P832_KX701_	190	160_{h6}	15	55_{k6}	215	10.0	112	27	324.5	82	102	250.5	0.035	13.5	M20
P932_KX701_	212	180_{h6}	17	75_{k6}	250	10.0	143	34	388.0	105	115	314.0	0.040	17.5	M20

Dimensions of motors

Type	□g	qp0	qp1	w1	x0	zp0
EZ301U	72	90	130.0	55.5	21	54.5
EZ302U	72	112	152.0	55.5	21	76.5
EZ303U	72	134	174.0	55.5	21	98.5
EZ401U	98	98	146.5	91.0	22	56.0
EZ402U	98	123	171.5	91.0	22	81.0
EZ404U	98	173	221.5	91.0	22	131.0
EZ501U	115	93	147.5	100.0	22	58.5
EZ502U	115	118	172.5	100.0	22	83.5
EZ503U	115	143	197.5	100.0	22	108.5
EZ505U	115	193	247.5	100.0	22	158.5
EZ701U	145	102	161.0	115.0	22	64.0
EZ702U	145	127	186.0	115.0	22	89.0
EZ703U	145	152	211.0	115.0	22	114.0
EZ705U	145	207	266.0	134.0	22	165.0
EZ813U	190	238	315.0	156.5	22	184.0
EZ815U	190	320	397.0	156.5	22	266.0

Dimensions of geared motors

Type	EZ3		EZ4		EZ5		EZ7		EZ8	
	□a6	mp	□a6	mp	□a6	mp	□a6	mp	□a6	mp
P231_KX301_	75	139.5	100	134.0	–	–	–	–	–	–
P331_KX301_	75	139.5	100	134.0	–	–	–	–	–	–
P332_KX301_	75	139.5	–	–	–	–	–	–	–	–
P431_KX401_	100	151.0	100	145.5	115	150.0	140	153.0	–	–
P432_KX301_	75	139.5	100	134.0	–	–	–	–	–	–
P531_KX501_	–	–	120	176.5	120	172.0	140	183.0	–	–
P532_KX401_	100	151.0	100	145.5	115	150.0	140	153.0	–	–
P731_KX701_	–	–	–	–	150	214.5	150	217.5	190	242.5
P732_KX501_	–	–	120	176.5	120	172.0	140	183.0	–	–
P831_KX701_	–	–	–	–	150	214.5	150	217.5	190	242.5
P832_KX701_	–	–	–	–	150	214.5	150	217.5	190	242.5
P932_KX701_	–	–	–	–	150	214.5	150	217.5	190	242.5

10.3.2 P shaft design (solid shaft with feather key)

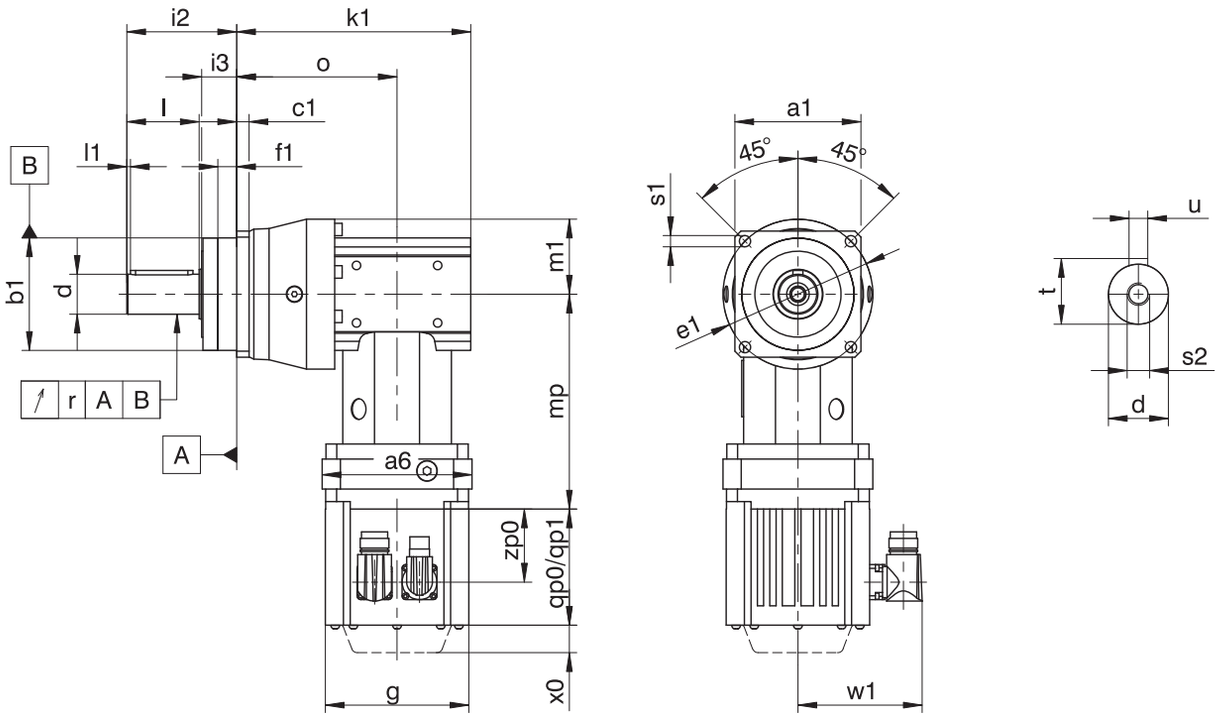

qp0	Applies to motors without brake.	qp1	Applies to motors with brake.
x0	Applies to encoders using an optical measuring method.	w1	Different for the One Cable Solution (OCS), see the chapter [▶ 17.4]
–	The radial runout specification applies only to the reinforced bearing D.		

Dimensions of gearboxes

Type	□a1	Øb1	c1	Ød	Øe1	f1	i2	i3	k1	l	l1	m1	o	r	Øs1	s2	t	u
P231_KX301_	55	50_{h6}	6	12_{k6}	63	7.0	36	12	124.0	22	2	31	84.0	–	5.5	M4	13.5	A4×4×18
P331_KX301_	72	60_{h6}	7	16_{k6}	75	7.5	48	18	131.0	28	2	36	91.0	0.025	5.5	M5	18.0	A5×5×22
P332_KX301_	72	60_{h6}	7	16_{k6}	75	7.5	48	18	165.5	28	2	37.5	125.5	0.025	5.5	M5	18.0	A5×5×22
P431_KX401_	76	70_{h6}	9	22_{k6}	85	7.5	56	18	165.0	36	3	49	115.0	0.025	6.6	M8	24.5	A6×6×28
P432_KX301_	76	70_{h6}	9	22_{k6}	85	7.5	56	18	180.0	36	3	50	140.0	0.025	6.6	M8	24.5	A6×6×28
P531_KX501_	101	90_{h6}	10	32_{k6}	120	15.0	88	28	187.5	58	3	57.5	128.5	0.030	9.0	M12	35.0	A10×8×50
P532_KX401_	101	90_{h6}	10	32_{k6}	120	15.0	88	28	207.0	58	3	60	157.0	0.030	9.0	M12	35.0	A10×8×50
P731_KX701_	144	130_{h6}	15	40_{k6}	165	3.5	112	27	232.5	82	4	75	158.5	0.035	11.0	M16	43.0	A12×8×70
P732_KX501_	144	130_{h6}	15	40_{k6}	165	3.5	112	27	255.5	82	4	75	196.5	0.035	11.0	M16	43.0	A12×8×70
P831_KX701_	190	160_{h6}	15	55_{k6}	215	10.0	112	27	267.0	82	6	102	193.0	0.035	13.5	M20	59.0	A16×10×70
P832_KX701_	190	160_{h6}	15	55_{k6}	215	10.0	112	27	324.5	82	6	102	250.5	0.035	13.5	M20	59.0	A16×10×70
P932_KX701_	212	180_{h6}	17	75_{k6}	250	10.0	143	34	388.0	105	7	115	314.0	0.040	17.5	M20	79.5	A20×12×90

Dimensions of motors

Type	□g	qp0	qp1	w1	x0	zp0
EZ301U	72	90	130.0	55.5	21	54.5
EZ302U	72	112	152.0	55.5	21	76.5
EZ303U	72	134	174.0	55.5	21	98.5
EZ401U	98	98	146.5	91.0	22	56.0
EZ402U	98	123	171.5	91.0	22	81.0
EZ404U	98	173	221.5	91.0	22	131.0
EZ501U	115	93	147.5	100.0	22	58.5
EZ502U	115	118	172.5	100.0	22	83.5
EZ503U	115	143	197.5	100.0	22	108.5
EZ505U	115	193	247.5	100.0	22	158.5
EZ701U	145	102	161.0	115.0	22	64.0
EZ702U	145	127	186.0	115.0	22	89.0
EZ703U	145	152	211.0	115.0	22	114.0
EZ705U	145	207	266.0	134.0	22	165.0
EZ813U	190	238	315.0	156.5	22	184.0
EZ815U	190	320	397.0	156.5	22	266.0

Dimensions of geared motors

Type	EZ3		EZ4		EZ5		EZ7		EZ8	
	□a6	mp	□a6	mp	□a6	mp	□a6	mp	□a6	mp
P231_KX301_	75	139.5	100	134.0	–	–	–	–	–	–
P331_KX301_	75	139.5	100	134.0	–	–	–	–	–	–
P332_KX301_	75	139.5	–	–	–	–	–	–	–	–
P431_KX401_	100	151.0	100	145.5	115	150.0	140	153.0	–	–
P432_KX301_	75	139.5	100	134.0	–	–	–	–	–	–
P531_KX501_	–	–	120	176.5	120	172.0	140	183.0	–	–
P532_KX401_	100	151.0	100	145.5	115	150.0	140	153.0	–	–
P731_KX701_	–	–	–	–	150	214.5	150	217.5	190	242.5
P732_KX501_	–	–	120	176.5	120	172.0	140	183.0	–	–
P831_KX701_	–	–	–	–	150	214.5	150	217.5	190	242.5
P832_KX701_	–	–	–	–	150	214.5	150	217.5	190	242.5
P932_KX701_	–	–	–	–	150	214.5	150	217.5	190	242.5

10.4 Type designation

In this chapter, you can find an explanation of the type designation with the associated options.

Additional ordering information not included in the type designation can be found at the end of the chapter.

Example code

P	7	3	1	S	G	S	S	0050	KX701VF	0030	MF	EZ703U

Explanation

Code	Designation	Design
P	Type	Planetary gearbox
7	Size	7 (example)
3	Generation	Generation 3
1	Stages	Single-stage
2		Two-stage
S	Housing	Standard
G	Shaft	Solid shaft without feather key
P		Solid shaft with feather key
S	Bearing	Standard bearing
D		Axially reinforced bearing (P3 – P9)
Z		Radially reinforced bearing (P3 – P9)[1]
S	Backlash	Standard
R		Reduced
0050	Transmission ratio of output (i x 10)	i = 5 (example)
KX701 VF	Input	KX7 right-angle geared motor (example)
0030	Transmission ratio of input (i x 10)	i = 3 (example)
MF	Motor adapter	Motor adapter with FlexiAdapt coupling
EZ703U	Motor	EZ synchronous servo motor

To complete the type designation, also specify the following in your order:

- A detailed type designation of the motor, see the chapter [▷ 17.5]
- Mounting position, see the chapter [▷ 10.5.3]
- Radial shaft seal rings at the output made of NBR or FKM (option), see the chapter [▷ 10.6.3]
- Position of the plug connectors, see the chapter [▷ 10.5.5]
- Reverse operation of the output shaft from ±20° to ±90° and horizontal installation, see the chapter [▷ 10.6.4]

To make selecting your geared motor easy, use our STOBER Configurator at https://configurator.stoeber.de/en-US/.

You can find a detailed description of the nameplate in the chapter [▷ 17.5.1].

[1] Not for reduced-backlash option.

10.5 Product description

10.5.1 Input options

EZ synchronous servo motor

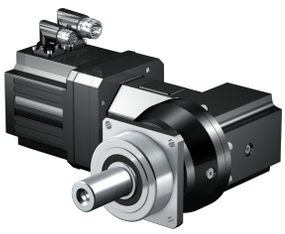

Catalog ID 442437_en

LM Lean motor

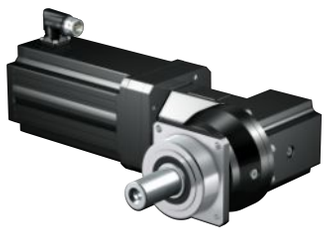

Catalog ID 443016_en

The corresponding catalogs can be found at http://www.stoeber.de/en/downloads/

Enter the ID of the catalog in the Search term field.

10.5.2 Installation conditions

The specified torques and forces only apply when gearboxes are fastened on the machine side using screws of strength class 12.9. In addition, the gear housings must be adjusted at the pilot. The machine-side fit must be H7.

10.5.3 Mounting positions

The following table shows the standard mounting positions.

The numbers identify the gearbox sides. The mounting position is defined by the gearbox side facing downwards.

EL1	EL2	EL3
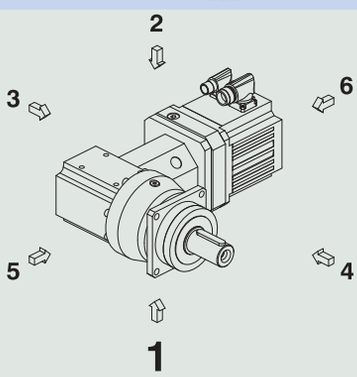	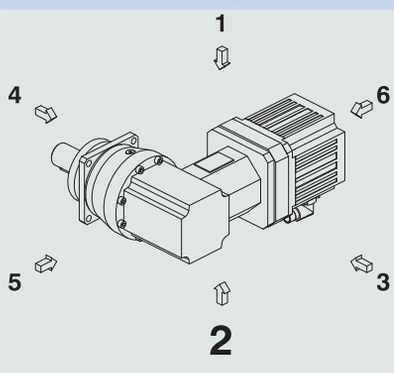	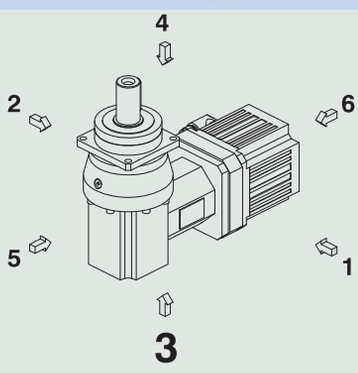
EL4	**EL5**	**EL6**
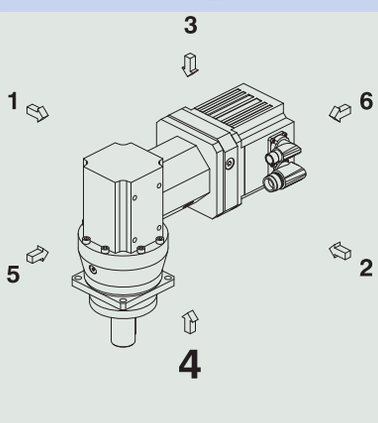	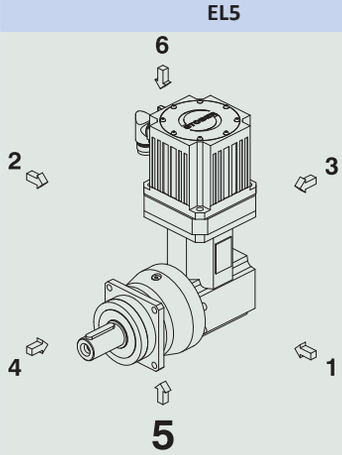	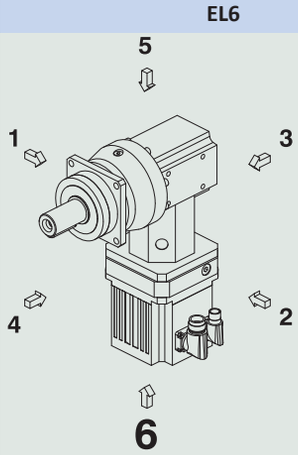

Since the lubricant filling volume of the gearbox depends on the mounting position, the mounting position must be specified when ordering.

10.5.4 Lubricants

STOBER fills the gearboxes with the amount and type of lubricant specified on the nameplate. The filling volume and the structure of the gearboxes depend on the mounting position.

Only install the gearboxes in the intended mounting position! Reposition the gearboxes only after consulting STOBER. Otherwise, STOBER assumes no liability for the gearboxes.

You will receive lubricants for use in the food industry upon request.

10.5.5 Position of the plug connectors

Mounting position EL1	Mounting position EL4
Plug connector in 270° position (standard)	Plug connector in 270° position (standard)
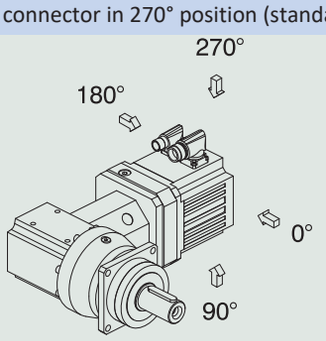	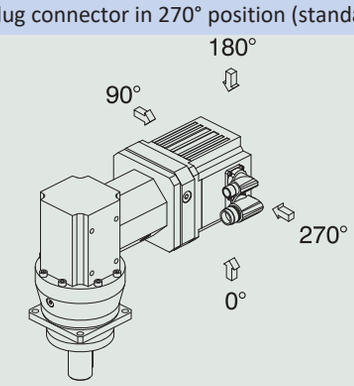

Indicate variations for your geared motor in the order.

Note that the plug connector position rotates along with the geared motor if the geared motor is in another mounting position.

10.5.6 Other product features

Feature	Value
Max. permitted gearbox temperature (on the surface of the gearbox)	≤ 90 °C
Paint	Black RAL 9005
Explosion-proof design in accordance with (ATEX) Directive 2014/34/EU (optional)	Not available
Efficiency:	
η_{get} two-stage	96%
η_{get} three-stage	94%
Protection class:[2]	
Gearbox	IP65
Motor	IP56, optionally IP66

10.5.7 Direction of rotation

P_KX3 – P_KX5	P_KX7
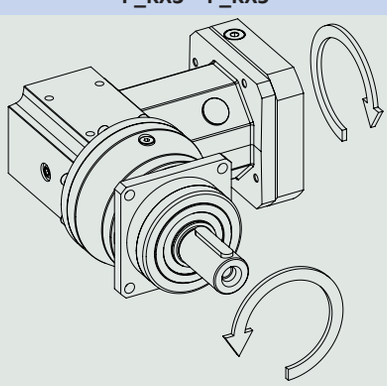	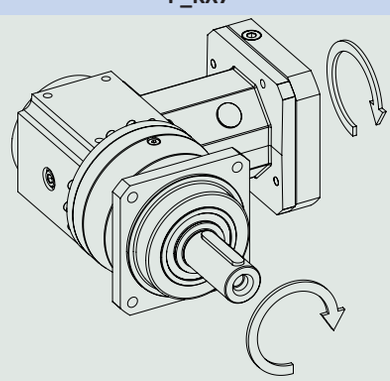

The figures show mounting position EL1.

[2] Observe the protection class of all the components.

10.6 Project configuration

Project your drives using our SERVOsoft designing software. Download SERVOsoft free of charge after registration at https://www.stoeber.de/en/services/info-servosoft/.

It is the most convenient and reliable method of drive selection, as the entire torque/speed curve of the application is displayed and evaluated here in the curve of the geared motor.

In this chapter, only limit values for specific operating points can be taken into consideration for manual drive selection.

An explanation of the formula symbols can be found in Chapter [▷ 20.1].

The formula symbols for values actually present in the application are marked with *.

10.6.1 Drive selection

Drive selection for gearboxes

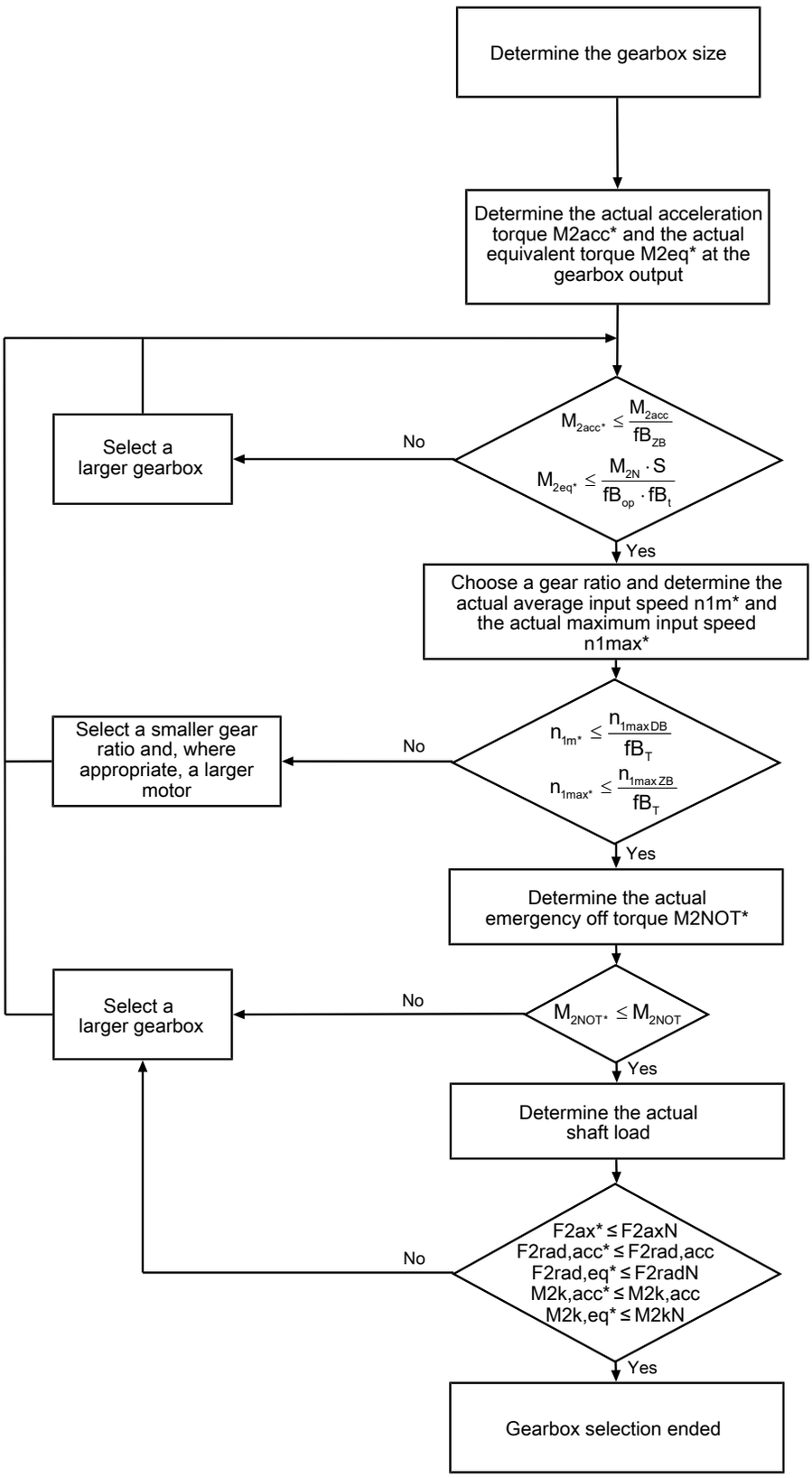

Calculate the forces and tilting torques in the chapter Permitted shaft loads.

Refer to the selection tables for the values for i, n_{1maxDB}, n_{1maxZB}, M_{2acc} (M_{2accHT} for reduced backlash), M_{2NOT}, M_{2N} and S.

The values for fB_T, fB_{op}, fB_t and fB_{ZB} can be found in the corresponding tables in this chapter.

Drive selection for motors

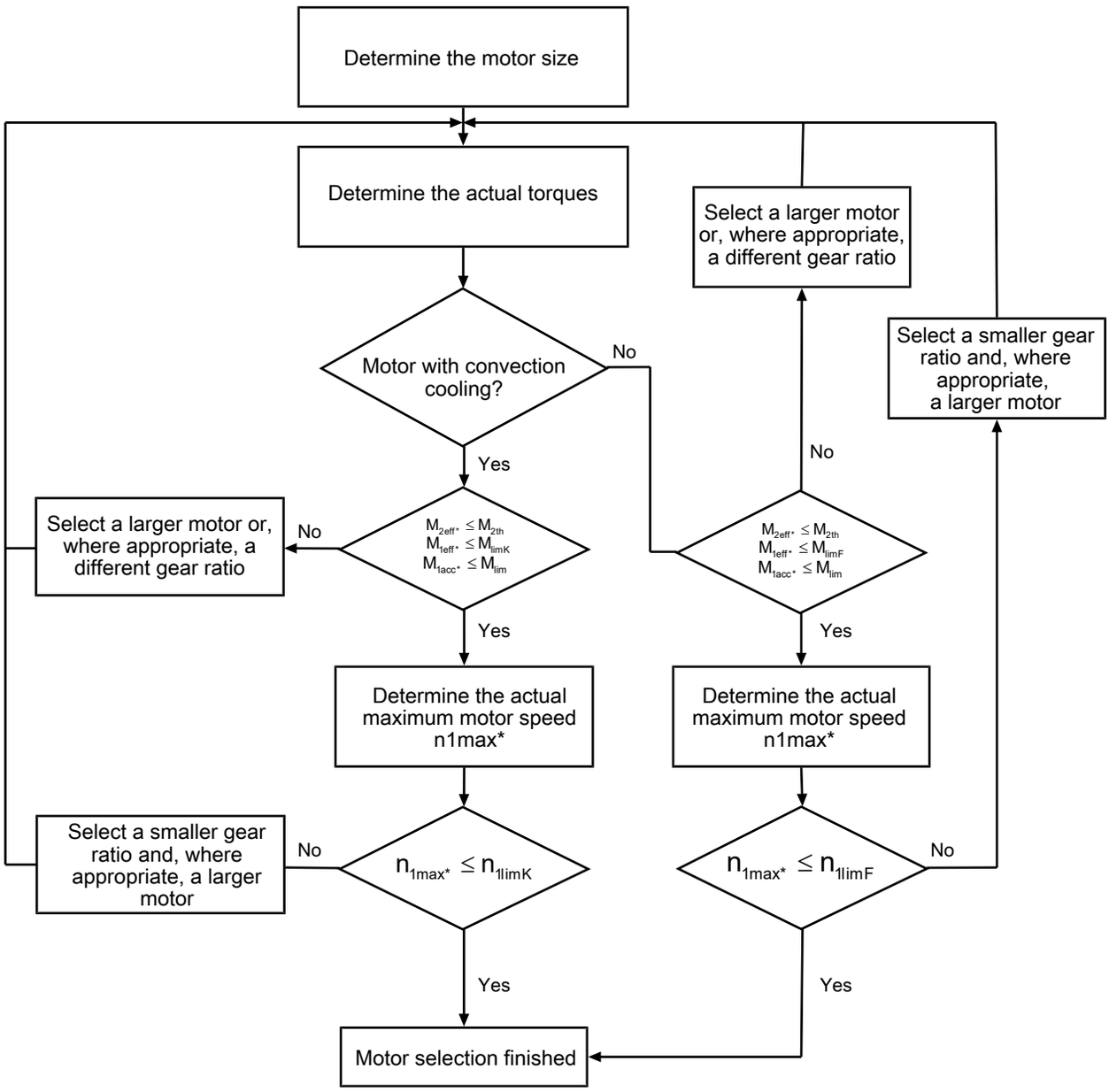

The value for M_{lim}, M_{limK}, M_{limF}, n_{1limK} and n_{1limF} can be found in the motor characteristic curve in the chapter [▷ 17.3]. Note the size, nominal speed n_N and cooling type of the motor.

Example of cyclic operation

The following calculations are based on a representation of the power taken from the output based in accordance with the following example:

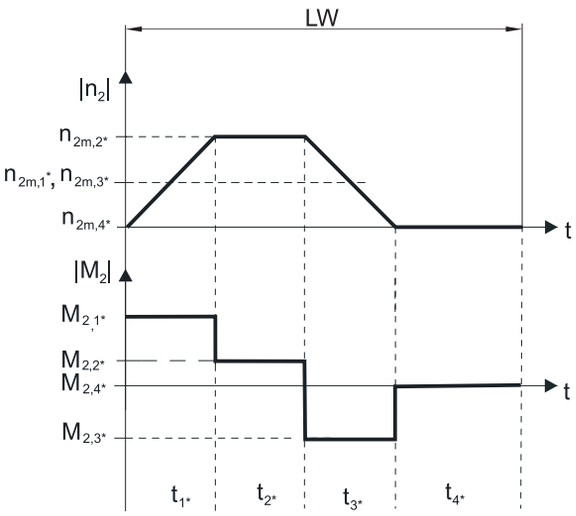

Calculation of the actual maximum acceleration torques

$$M_{2acc*} = J_{tot} \cdot \frac{\Delta n_2}{9{,}55 \cdot \Delta t} + M_{L*}$$

$$M_{1acc*} = \frac{M_{2acc*}}{i \cdot \eta_{get}} + J_1 \cdot \frac{\Delta n_1}{9{,}55 \cdot \Delta t}$$

Calculation of the actual average input speed

$$n_{1m*} = n_{2m*} \cdot i$$

$$n_{2m*} = \frac{\left|n_{2m,1*}\right| \cdot t_{1*} + \ldots + \left|n_{2m,n*}\right| \cdot t_{n*}}{t_{1*} + \ldots + t_{n*}}$$

If $t_{1*} + \ldots + t_{3*} \geq 6$ min, calculate n_{2m*} without the rest phase t_{4*}.

The values for the ratio i can be found in the selection tables.

Calculation of the actual effective torque

$$M_{2eff*} = \sqrt{\frac{t_{1*} \cdot M_{2,1*}{}^2 + \ldots + t_{n*} \cdot M_{2,n*}{}^2}{t_{1*} + \ldots + t_{n*}}}$$

Calculation of the actual emergency off torque

$$M_{2NOT*} = J_{tot} \cdot \frac{\Delta n_2}{9.55 \cdot \Delta t} + M_{L*}$$

Calculation of the actual equivalent torque

$$M_{2eq*} = \sqrt[3]{\frac{\left|n_{2m,1*}\right| \cdot t_{1*} \cdot \left|M_{2,1*}{}^3\right| + \ldots + \left|n_{2m,n*}\right| \cdot t_{n*} \cdot \left|M_{2,n*}{}^3\right|}{\left|n_{2m,1*}\right| \cdot t_{1*} + \ldots + \left|n_{2m,n*}\right| \cdot t_{n*}}}$$

Calculation of the thermal limit torque

Calculate the thermal limit torque M_{2th} for a duty cycle $ED_{10} > 50\%$ and the actual average input speed n_{1m*}. (At $K_{mot,th} \leq 0$ you must reduce the average input speed n_{1m*} accordingly or select another geared motor size.)

$$M_{2th} = M_{op} \cdot i \cdot K_{mot,th}$$

$$K_{mot,th} = 0{,}9 - \frac{a_{th}}{1000} \cdot athEL \cdot fB_T \cdot \left(\frac{n_{1m*}}{1000}\right)^3$$

The values for i and a_{th} can be found in the selection tables.

The values for a_{thEL} and fB_T can be found in the corresponding tables in this chapter.

The value for the torque of the motor at operating point M_{op} with the determined average input speed n_{1m*} can be found in the motor characteristic curve in the chapter [▶ 17.3]. Note the size, nominal speed n_N and cooling type of the motor. The figure below shows an example of reading the torque M_{op} of a motor with convection cooling at the operating point.

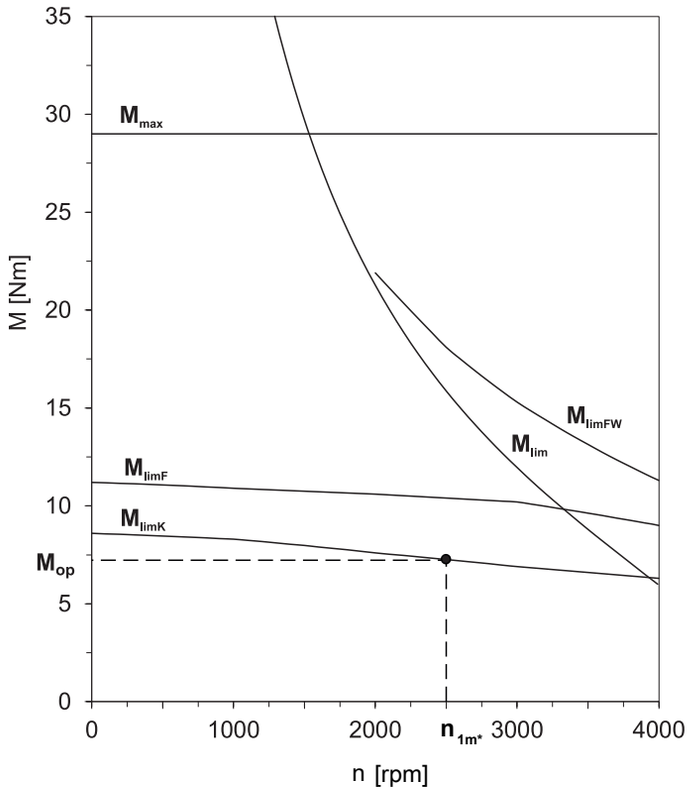

Operating factors

Parameter a_{thEL}

Mounting position	a_{thEL}
EL1, 2, 5, 6	1.0
EL3, 4	1.1

Operating mode	fB_{op}
Uniform continuous operation	1.00
Cyclic operation	1.25
Reversing load cyclic operation	1.40

Run time	fB_t
Daily runtime ≤ 8 h	1.00
Daily runtime ≤ 16 h	1.15
Daily runtime ≤ 24 h	1.20

Cyclic operation	fB_{ZB}
≤ 1000 load changes/hour (LW/h)	1.00
> 1000 load changes/hour (LW/h)	1.15

Temperature		fB_T
Motor cooling	**Surrounding temperature**	
Motor with forced ventilation	≤ 20 °C	0.9
	≤ 30 °C	1.0
	≤ 40 °C	1.15
Motor with convection cooling	≤ 20 °C	1.0
	≤ 30 °C	1.1
	≤ 40 °C	1.25

Notes

- The maximum permitted gearbox temperature (see the "Other product features" chapter) must not be exceeded. Doing so may result in damage to the geared motor.
- For braking from full speed (for example when the power fails or when setting up the machine), note the permitted gearbox torques (M_{2acc}, M_{2NOT}) in the selection tables.

10.6.2 Permitted shaft loads for the output shaft

The values specified in the tables apply to the permitted shaft loads:

- For shaft dimensions in accordance with the catalog
- For output speeds $n_{2m*} \leq 100$ rpm ($F^{2axN} = F_{2ax100}$; $F_{2radN} = F_{2rad100}$; $M_{2kN} = M_{2k100}$)
- Only if radial forces on the gearbox are stabilized by its pilots (housing, flange shaft)

Permitted shaft loads for standard bearing S

Type	z_2	F_{2ax100}	$F_{2rad100}$	$F_{2rad,acc}$	M_{2k100}	$M_{2k,acc}$
	[mm]	[N]	[N]	[N]	[Nm]	[Nm]
P2	17.0	500	1200	1300	34	36
P3	17.5	1000	2500	2500	79	79
P4	18.5	1500	4000	4500	146	164
P5	19.5	2300	6500	7000	315	340
P7	23.0	2900	8500	9000	544	576
P8	24.5	4700	13000	18000	852	1179
P9	33.0	6000	18000	27000	1539	2309

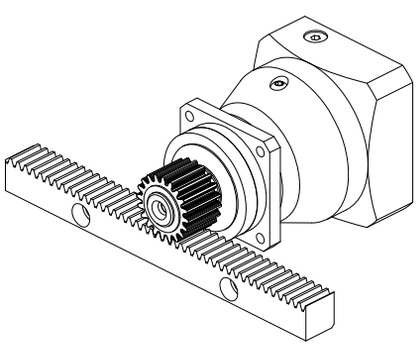

Fig. 1: Recommendation for bearing assignment S (e.g. for straight-cut gearing)

Permitted shaft loads for axially reinforced bearing D

Type	z_2	F_{2ax100}	$F_{2rad100}$	$F_{2rad,acc}$	M_{2k100}	$M_{2k,acc}$
	[mm]	[N]	[N]	[N]	[Nm]	[Nm]
P3	20.0	2500	2750	2750	94	94
P4	22.5	4000	4500	5000	182	203
P5	25.5	6000	7000	8000	382	436
P7	29.0	10000	9500	10000	665	700
P8	32.0	15500	15000	18000	1095	1314
P9	44.0	25000	20000	30000	1930	2895

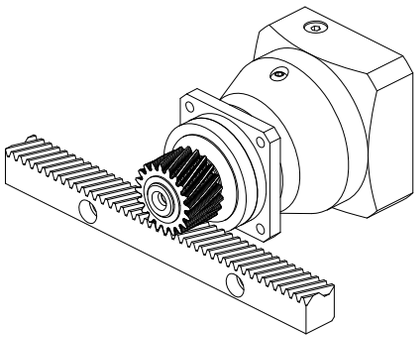

Fig. 2: Recommendation for bearing assignment D (e.g. for helical gearing)

Permitted shaft loads for radially reinforced bearing Z

Type	z_2 [mm]	F_{2ax100} [N]	$F_{2rad100}$ [N]	$F_{2rad,acc}$ [N]	M_{2k100} [Nm]	$M_{2k,acc}$ [Nm]
P3	17.5	600	3000	3000	95	95
P4	18.5	1000	5000	5000	183	183
P5	19.5	1600	8000	8000	388	388
P7	23.0	2000	10000	10000	640	640
P8	24.5	3600	18000	18000	1179	1179
P9	33.0	5000	27000	35000	2309	2993

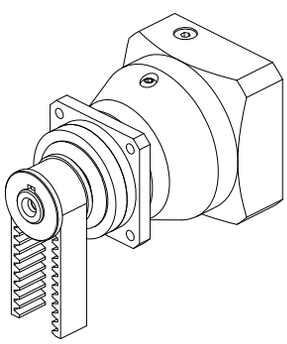

Fig. 3: Recommendation for bearing assignment Z (e.g. for belt drives)

For other output speeds, download diagrams at https://configurator.stoeber.de/en-US/.

The following applies to output speeds n_{2m*} > 100 rpm:

$$F_{2axN} = \frac{F_{2ax100}}{\sqrt[3]{\frac{n_{2m*}}{100\ rpm}}} \qquad F_{2radN} = \frac{F_{2rad100}}{\sqrt[3]{\frac{n_{2m*}}{100\ rpm}}} \qquad M_{2kN} = \frac{M_{2k100}}{\sqrt[3]{\frac{n_{2m*}}{100\ rpm}}}$$

The values for F_{2ax100}, $F_{2rad100}$ and M_{2k100} can be found in the table "Permitted shaft loads" in this chapter.

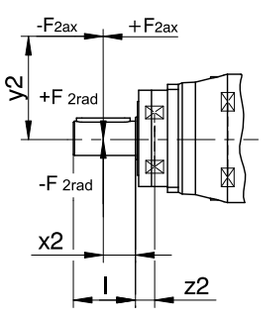

Fig. 4: Force application points

The specified values for $F_{2rad100}$ and $F_{2rad,acc}$ refer to an application of force at the center of the output shaft: $x_2 = l/2$.

Shaft dimensions can be found in the "Dimensional drawings" chapter.

The following applies to other force application points:

$$M_{2k,acc^*} = \frac{2 \cdot F_{2ax^*} \cdot y_2 + F_{2rad,acc^*} \cdot (x_2 + z_2)}{1000}$$

For applications with multiple axial and/or radial forces, you must add the forces as vectors.

In the event of EMERGENCY OFF operation (max. 1000 load changes), you can multiply the permitted forces and torques for F_{2ax100}, $F_{2rad100}$ and M_{2k100} by a factor of two.

Also note the calculation for equivalent values:

$$M_{2k,eq^*} = \sqrt[3]{\frac{|n_{2m,1^*}| \cdot t_{1^*} \cdot |M_{2k,acc,1^*}{}^3| + \ldots + |n_{2m,n^*}| \cdot t_{n^*} \cdot |M_{2k,acc,n^*}{}^3|}{|n_{2m,1^*}| \cdot t_{1^*} + \ldots + |n_{2m,n^*}| \cdot t_{n^*}}}$$

$$F_{2rad,eq^*} = \sqrt[3]{\frac{|n_{2m,1^*}| \cdot t_{1^*} \cdot |F_{2rad,acc,1^*}{}^3| + \ldots + |n_{2m,n^*}| \cdot t_{n^*} \cdot |F_{2rad,acc,n^*}{}^3|}{|n_{2m,1^*}| \cdot t_{1^*} + \ldots + |n_{2m,n^*}| \cdot t_{n^*}}}$$

The following apply to the bearing service life L_{10h} ($ED_{10} \leq 40\%$):

$L_{10h} > 10000$ h with $1 < M_{2kN}/M_{2k^*} < 1.25$

$L_{10h} > 20000$ h with $1.25 < M_{2kN}/M_{2k^*} < 1.5$

$L_{10h} > 30000$ h with $1.5 < M_{2kN}/M_{2k^*}$

For different duty cycles:

$$L_{10h} > L_{10h(ED_{10}=40\%)} \cdot \frac{40\%}{ED_{10}}$$

10.6.3 Recommendation for radial shaft seal rings

For a duty cycle > 60% and higher surrounding temperatures, we recommend radial shaft seal rings made of FKM at the output.

Properties:

- Excellent temperature resistance
- High chemical stability
- Very good resistance to aging
- Excellent resistance in oils and greases
- For use in the food, beverage and pharmaceutical industries

Leak-proofness

Our gearboxes are equipped with high-quality radial shaft seal rings and checked for leaks. However, a leak cannot be fully ruled out over the length of use of a gearbox. If you use a gearbox with goods incompatible with the lubricant, you must take measures to prevent direct contact with the gearbox lubricant in case of a leak.

10.6.4 Reverse operation

To ensure lubrication for circulating gearing parts during cyclic reverse operation from ± 20° to ± 90° at the output, pay careful attention to the position of the output shaft for the horizontal mounting of the gearbox, as shown in the diagrams below. The images show the center position of reverse operation. Cyclic reverse operation ≤ ± 20° on request.

Solid shaft without feather key	Solid shaft with feather key
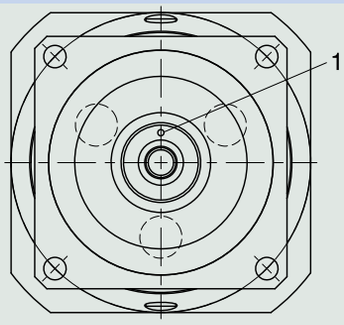	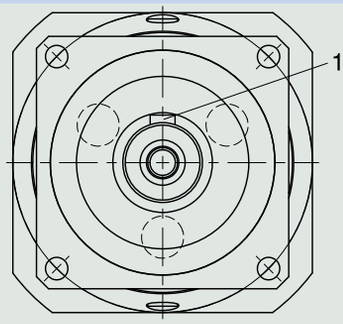
1 Position of the mark: top	1 Position of the feather key: top

Notes

- If you use the solid shaft without a feather key (G), you must note the position of the mark during assembly.
- As an alternative, you can use the solid shaft with a feather key (P). In that case, the feather key functions for position orientation. For a backlash-free connection, also use a clamp.

10.7 Additional documentation

Additional documentation related to the product can be found at
http://www.stoeber.de/en/downloads/

Enter the ID of the documentation in the Search term field.

Documentation	ID
Operating manual gearboxes, geared motors P23KX – P93KX	443361_en

11 PK right-angle planetary geared motors

Table of contents

11.1 Overview 302

11.2 Selection tables 303

11.3 Dimensional drawings 319

11.3.1 G shaft design (solid shaft without feather key) 320

11.3.2 P shaft design (solid shaft with feather key) 322

11.4 Type designation 323

11.5 Product description 324

11.5.1 Input options 324

11.5.2 Installation conditions 324

11.5.3 Mounting positions 324

11.5.4 Lubricants 325

11.5.5 Position of the plug connectors 325

11.5.6 Other product features 325

11.5.7 Direction of rotation 325

11.6 Project configuration 326

11.6.1 Drive selection 327

11.6.2 Permitted shaft loads for the output shaft 331

11.6.3 Recommendation for radial shaft seal rings 333

11.6.4 Reverse operation 334

11.7 Additional documentation 334

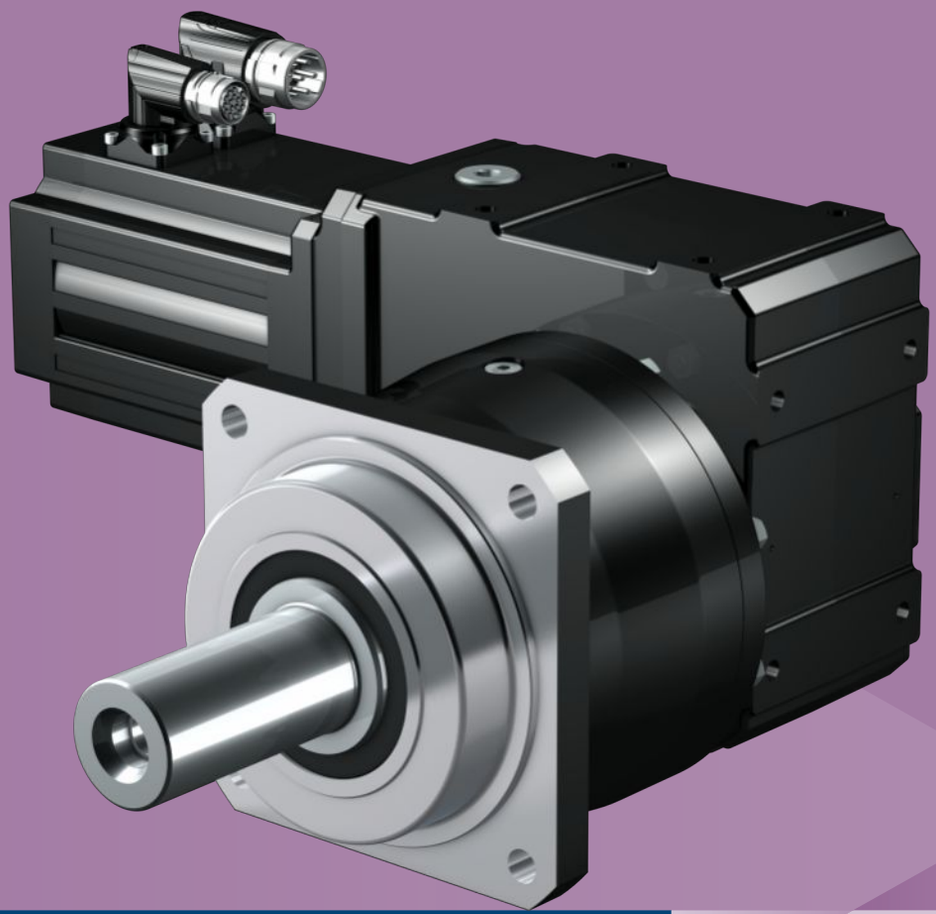

11 Right-angle planetary geared motors PK

11.1 Overview

Helical-geared precision right-angle planetary geared motors

Features

Power density	★★★☆☆
Backlash	★★★★★
Price category	€€€
Shaft load	★★★★☆
Smooth operation	★★★☆☆
Torsional stiffness	★★★☆☆
Mass moment of inertia	★★★★★
Helical gearing	✓
Maintenance-free	✓
Continuous operation without cooling	✓
Reinforced output bearing	✓ (optional)
Compact and highly dynamic due to direct motor attachment	✓

Key ★☆☆☆☆ good | ★★★★★ excellent
€ Economy | €€€€€ Premium

Technical data

i	12 – 555
M_{2acc}	68 – 3105 Nm
$\Delta\phi_2$	1.5 – 5 arcmin
η_{get}	94 %

11.2 Selection tables

The technical data specified in the selection tables applies to:

- Installation altitudes up to 1000 m above sea level
- Surrounding temperatures from 0 °C to 40 °C
- Drives with convection-cooled motors (e.g. EZ401**U**)
- M_{2acc}, M_{2accHT}: Solid shaft design without feather key (we generally recommend this shaft design for cyclic operation)

For the technical data on drives with forced ventilated motors (e.g. EZ401**B**), refer to https://configurator.stoeber.de/en-US/.

An explanation of the formula symbols can be found in Chapter [▷ 20.1].

n_{2N} [rpm]	M_{2N} [Nm]	$M_{2,0}$ [Nm]	a_{th}	S	Type	M_{2acc} [Nm]	M_{2accHT} [Nm]	M_{2NOT} [Nm]	i	i_{exakt}	n_{1maxDB} EL1,2 [rpm]	n_{1maxDB} EL3,4,5,6 [rpm]	n_{1maxZB} [rpm]	$\Delta\varphi_2$ [arcmin]	J_1 [kgcm²]	$\Delta\varphi_{2red}$ [arcmin]	C_2 [Nm/arcmin]	m [kg]
P531K (n_{1N} = 3000 min^{-1}, $M_{2acc,max}$ = 350 Nm)																		
13	205	210	12	1.1	P531_0050K102_0470 EZ301U	350	385	700	234.6	11495/49	4000	4000	7000	4.0	0.22	2.0	29	17
17	154	157	11	1.4	P531_0050K102_0350 EZ301U	350	385	700	175.5	3686/21	4000	4000	7000	4.0	0.23	2.0	29	17
21	123	125	10	1.8	P531_0050K102_0280 EZ301U	350	369	700	140.2	2945/21	4000	4000	7000	4.0	0.26	2.0	29	17
21	210	222	18	1.0	P531_0050K102_0280 EZ302U	350	385	700	140.2	2945/21	4000	4000	7000	4.0	0.36	2.0	29	17
26	102	104	9.8	2.2	P531_0050K102_0230 EZ301U	306	306	700	116.3	5700/49	4000	4000	7000	4.0	0.28	2.0	29	17
26	174	184	17	1.3	P531_0050K102_0230 EZ302U	350	385	700	116.3	5700/49	4000	4000	7000	4.0	0.38	2.0	29	17
34	77	78	9.2	2.9	P531_0050K102_0175 EZ301U	231	231	659	87.82	10450/119	4000	4000	6000	4.0	0.32	2.0	29	17
34	131	139	16	1.7	P531_0050K102_0175 EZ302U	350	385	659	87.82	10450/119	4000	4000	6000	4.0	0.42	2.0	29	17
34	171	181	20	1.3	P531_0050K102_0175 EZ303U	350	385	659	87.82	10450/119	4000	4000	6000	4.0	0.53	2.0	29	18
43	62	63	8.7	3.6	P531_0050K102_0140 EZ301U	186	186	529	70.57	494/7	4000	4000	6000	4.0	0.37	2.0	29	17
43	106	112	15	2.1	P531_0050K102_0140 EZ302U	332	332	529	70.57	494/7	4000	4000	6000	4.0	0.47	2.0	29	17
43	137	145	19	1.6	P531_0050K102_0140 EZ303U	350	385	529	70.57	494/7	4000	4000	6000	4.0	0.58	2.0	29	18
43	186	199	26	1.2	P531_0050K102_0140 EZ401U	350	385	700	70.57	494/7	4000	4000	6000	4.0	1.1	2.0	29	19
52	51	52	8.3	4.3	P531_0050K102_0115 EZ301U	152	152	434	57.83	1330/23	3600	3600	5500	4.0	0.43	2.0	29	17
52	87	91	14	2.5	P531_0050K102_0115 EZ302U	272	272	434	57.83	1330/23	3600	3600	5500	4.0	0.53	2.0	29	17
52	113	119	18	2.0	P531_0050K102_0115 EZ303U	326	326	434	57.83	1330/23	3600	3600	5500	4.0	0.64	2.0	29	18
52	152	163	25	1.4	P531_0050K102_0115 EZ401U	350	385	700	57.83	1330/23	3600	3600	5500	4.0	1.2	2.0	29	19
65	69	73	13	3.2	P531_0050K102_0092 EZ302U	218	218	347	46.25	8740/189	3600	3600	5500	4.0	0.62	2.0	29	17
65	90	95	17	2.4	P531_0050K102_0092 EZ303U	261	261	347	46.25	8740/189	3600	3600	5500	4.0	0.73	2.0	29	18
65	122	131	23	1.8	P531_0050K102_0092 EZ401U	350	370	700	46.25	8740/189	3600	3600	5500	4.0	1.3	2.0	29	19
65	187	205	36	1.2	P531_0050K102_0092 EZ501U	350	385	700	46.25	8740/189	3600	3600	5500	4.0	3.2	2.0	29	20
65	205	226	39	1.1	P531_0050K102_0092 EZ402U	350	385	700	46.25	8740/189	3600	3600	5500	4.0	2.0	2.0	29	20
72	62	66	13	3.5	P531_0050K102_0083 EZ302U	195	195	312	41.55	1911/46	3600	3600	5500	4.0	0.59	2.0	29	17
72	81	86	17	2.7	P531_0050K102_0083 EZ303U	235	235	312	41.55	1911/46	3600	3600	5500	4.0	0.70	2.0	29	18
72	109	117	23	2.0	P531_0050K102_0083 EZ401U	332	332	700	41.55	1911/46	3600	3600	5500	4.0	1.2	2.0	29	19
72	168	184	35	1.3	P531_0050K102_0083 EZ501U	350	385	700	41.55	1911/46	3600	3600	5500	4.0	3.2	2.0	29	20
72	184	203	38	1.2	P531_0050K102_0083 EZ402U	350	385	700	41.55	1911/46	3600	3600	5500	4.0	1.9	2.0	29	20
90	50	53	14	3.8	P531_0050K102_0066 EZ302U	156	156	249	33.22	299/9	3600	3600	5500	4.0	0.71	2.0	29	17
90	65	68	19	2.9	P531_0050K102_0066 EZ303U	188	188	249	33.22	299/9	3600	3600	5500	4.0	0.82	2.0	29	18
90	88	94	22	2.5	P531_0050K102_0066 EZ401U	266	266	700	33.22	299/9	3600	3600	5500	4.0	1.3	2.0	29	19
90	134	147	33	1.6	P531_0050K102_0066 EZ501U	350	385	700	33.22	299/9	3600	3600	5500	4.0	3.3	2.0	29	20
90	147	163	36	1.5	P531_0050K102_0066 EZ402U	350	385	700	33.22	299/9	3600	3600	5500	4.0	2.0	2.0	29	20
90	216	269	53	1.0	P531_0050K102_0066 EZ404U	350	385	700	33.22	299/9	3600	3600	5500	4.0	3.4	2.0	29	22
100	79	85	21	2.8	P531_0050K102_0060 EZ401U	240	240	700	30.00	30/1	3300	3300	5000	4.0	1.4	2.0	29	19
100	121	133	32	1.8	P531_0050K102_0060 EZ501U	350	385	700	30.00	30/1	3300	3300	5000	4.0	3.4	2.0	29	20
100	133	147	35	1.7	P531_0050K102_0060 EZ402U	350	385	700	30.00	30/1	3300	3300	5000	4.0	2.1	2.0	29	20
100	195	243	52	1.1	P531_0050K102_0060 EZ404U	350	385	700	30.00	30/1	3300	3300	5000	4.0	3.5	2.0	29	22
100	209	226	56	1.1	P531_0050K102_0060 EZ502U	350	385	700	30.00	30/1	3300	3300	5000	4.0	5.7	2.0	29	22
100	209	234	56	1.1	P531_0050K102_0060 EZ701U	350	385	700	30.00	30/1	3300	3300	5000	4.0	9.0	2.0	29	23
108	42	44	16	3.8	P531_0050K102_0056 EZ302U	131	131	209	27.84	7600/273	3300	3300	5000	4.0	0.97	2.0	29	17
108	54	57	21	2.9	P531_0050K102_0056 EZ303U	157	157	209	27.84	7600/273	3300	3300	5000	4.0	1.1	2.0	29	18
108	73	79	21	3.0	P531_0050K102_0056 EZ401U	223	223	700	27.84	7600/273	3300	3300	5000	4.0	1.6	2.0	29	19
108	113	123	32	2.0	P531_0050K102_0056 EZ501U	350	385	700	27.84	7600/273	3300	3300	5000	4.0	3.6	2.0	29	20
108	123	136	35	1.8	P531_0050K102_0056 EZ402U	350	385	700	27.84	7600/273	3300	3300	5000	4.0	2.3	2.0	29	20
108	181	225	51	1.2	P531_0050K102_0056 EZ404U	350	385	700	27.84	7600/273	3300	3300	5000	4.0	3.7	2.0	29	22
108	194	210	55	1.1	P531_0050K102_0056 EZ502U	350	385	700	27.84	7600/273	3300	3300	5000	4.0	5.9	2.0	29	22
108	194	217	55	1.1	P531_0050K102_0056 EZ701U	350	385	700	27.84	7600/273	3300	3300	5000	4.0	9.2	2.0	29	23
150	39	41	27	2.9	P531_0050K102_0040 EZ303U	113	113	150	20.00	20/1	3300	3300	5000	4.0	1.3	2.0	29	18
150	53	56	19	4.2	P531_0050K102_0040 EZ401U	160	160	600	20.00	20/1	3300	3300	5000	4.0	1.8	2.0	29	19
150	81	88	29	2.7	P531_0050K102_0040 EZ501U	301	301	600	20.00	20/1	3300	3300	5000	4.0	3.8	2.0	29	20

n_{2N} [rpm]	M_{2N} [Nm]	$M_{2,0}$ [Nm]	a_{th}	S	Type	M_{2acc} [Nm]	M_{2accHT} [Nm]	M_{2NOT} [Nm]	i	i_{exakt}	n_{1maxDB} EL1,2 [rpm]	n_{1maxDB} EL3,4,5,6 [rpm]	n_{1maxZB} [rpm]	$\Delta\varphi_2$ [arcmin]	J_1 [kgcm²]	$\Delta\varphi_{2red}$ [arcmin]	C_2 [Nm/arcmin]	m [kg]
P531K (n_{1N} = 3000 min^{-1}, $M_{2acc,max}$ = 350 Nm)																		
150	88	98	32	2.5	P531_0050K102_0040 EZ402U	301	301	600	20.00	20/1	3300	3300	5000	4.0	2.5	2.0	29	20
150	130	162	47	1.7	P531_0050K102_0040 EZ404U	350	385	600	20.00	20/1	3300	3300	5000	4.0	3.9	2.0	29	22
150	139	151	50	1.6	P531_0050K102_0040 EZ502U	350	385	600	20.00	20/1	3300	3300	5000	4.0	6.1	2.0	29	22
150	139	156	50	1.6	P531_0050K102_0040 EZ701U	350	376	600	20.00	20/1	3300	3300	5000	4.0	9.4	2.0	29	23
150	183	209	66	1.2	P531_0050K102_0040 EZ503U	350	385	600	20.00	20/1	3300	3300	5000	4.0	8.5	2.0	29	23
188	31	33	27	2.9	P531_0040K102_0040 EZ303U	90	90	120	16.00	16/1	3300	3300	5000	4.5	1.3	2.5	27	18
188	42	45	17	4.8	P531_0040K102_0040 EZ401U	128	128	480	16.00	16/1	3300	3300	5000	4.5	1.9	2.5	27	19
188	65	71	26	3.1	P531_0040K102_0040 EZ501U	241	241	480	16.00	16/1	3300	3300	5000	4.5	3.8	2.5	27	20
188	71	78	28	2.8	P531_0040K102_0040 EZ402U	241	241	480	16.00	16/1	3300	3300	5000	4.5	2.6	2.5	27	20
188	104	129	41	1.9	P531_0040K102_0040 EZ404U	300	320	480	16.00	16/1	3300	3300	5000	4.5	3.9	2.5	27	22
188	111	120	44	1.8	P531_0040K102_0040 EZ502U	300	320	480	16.00	16/1	3300	3300	5000	4.5	6.1	2.5	27	22
188	111	125	44	1.8	P531_0040K102_0040 EZ701U	300	301	480	16.00	16/1	3300	3300	5000	4.5	9.4	2.5	27	23
188	146	167	58	1.4	P531_0040K102_0040 EZ503U	300	320	480	16.00	16/1	3300	3300	5000	4.5	8.5	2.5	27	23
250	23	25	27	2.9	P531_0030K102_0040 EZ303U	68	68	90	12.00	12/1	3300	3300	5000	5.0	1.4	3.0	22	18
250	32	34	21	3.8	P531_0030K102_0040 EZ401U	96	96	360	12.00	12/1	3300	3300	5000	5.0	2.0	3.0	22	19
250	49	53	32	2.5	P531_0030K102_0040 EZ501U	181	181	360	12.00	12/1	3300	3300	5000	5.0	3.9	3.0	22	20
250	53	59	35	2.3	P531_0030K102_0040 EZ402U	181	181	360	12.00	12/1	3300	3300	5000	5.0	2.7	3.0	22	20
250	78	97	52	1.5	P531_0030K102_0040 EZ404U	200	200	360	12.00	12/1	3300	3300	5000	5.0	4.0	3.0	22	22
250	84	90	55	1.4	P531_0030K102_0040 EZ502U	200	200	360	12.00	12/1	3300	3300	5000	5.0	6.2	3.0	22	22
250	84	94	55	1.4	P531_0030K102_0040 EZ701U	200	200	360	12.00	12/1	3300	3300	5000	5.0	9.5	3.0	22	23
250	110	125	73	1.1	P531_0030K102_0040 EZ503U	200	200	360	12.00	12/1	3300	3300	5000	5.0	8.6	3.0	22	23
P531K (n_{1N} = 6000 min^{-1}, $M_{2acc,max}$ = 350 Nm)																		
26	196	210	11	1.1	P531_0050K102_0470 EZ301U	350	385	700	234.6	11495/49	4000	4000	7000	4.0	0.22	2.0	29	17
34	147	157	10	1.5	P531_0050K102_0350 EZ301U	350	385	700	175.5	3686/21	4000	4000	7000	4.0	0.23	2.0	29	17
43	117	125	9.9	1.9	P531_0050K102_0280 EZ301U	350	369	700	140.2	2945/21	4000	4000	7000	4.0	0.26	2.0	29	17
43	198	222	17	1.1	P531_0050K102_0280 EZ302U	350	385	700	140.2	2945/21	4000	4000	7000	4.0	0.36	2.0	29	17
52	97	104	9.4	2.3	P531_0050K102_0230 EZ301U	306	306	700	116.3	5700/49	4000	4000	7000	4.0	0.28	2.0	29	17
52	164	184	16	1.3	P531_0050K102_0230 EZ302U	350	385	700	116.3	5700/49	4000	4000	7000	4.0	0.38	2.0	29	17
52	215	246	21	1.0	P531_0050K102_0230 EZ303U	350	385	700	116.3	5700/49	4000	4000	7000	4.0	0.49	2.0	29	18
68	74	78	8.8	3.0	P531_0050K102_0175 EZ301U	231	231	659	87.82	10450/119	4000	4000	6000	4.0	0.32	2.0	29	17
68	124	139	15	1.8	P531_0050K102_0175 EZ302U	350	385	659	87.82	10450/119	4000	4000	6000	4.0	0.42	2.0	29	17
68	162	186	19	1.4	P531_0050K102_0175 EZ303U	350	385	659	87.82	10450/119	4000	4000	6000	4.0	0.53	2.0	29	18
68	190	231	23	1.2	P531_0050K102_0175 EZ401U	350	385	700	87.82	10450/119	4000	4000	6000	4.0	1.1	2.0	29	19
85	59	63	8.3	3.7	P531_0050K102_0140 EZ301U	186	186	529	70.57	494/7	4000	4000	6000	4.0	0.37	2.0	29	17
85	100	112	14	2.2	P531_0050K102_0140 EZ302U	332	332	529	70.57	494/7	4000	4000	6000	4.0	0.47	2.0	29	17
85	130	149	18	1.7	P531_0050K102_0140 EZ303U	350	385	529	70.57	494/7	4000	4000	6000	4.0	0.58	2.0	29	18
85	153	186	21	1.4	P531_0050K102_0140 EZ401U	350	385	700	70.57	494/7	4000	4000	6000	4.0	1.1	2.0	29	19
P731K (n_{1N} = 3000 min^{-1}, $M_{2acc,max}$ = 810 Nm)																		
6.1	429	438	9.1	1.0	P731_0070K102_0700 EZ301U	566	566	1003	490.2	2451/5	4000	4000	7000	4.0	0.20	2.0	52	23
7.6	344	351	8.6	1.3	P731_0070K102_0560 EZ301U	697	697	1235	392.7	1178/3	4000	4000	7000	4.0	0.21	2.0	52	23
8.5	308	315	11	1.1	P731_0070K102_0500 EZ301U	407	407	721	352.2	35217/100	4000	4000	7000	4.0	0.21	2.0	52	23
8.5	307	314	14	1.1	P731_0100K102_0350 EZ301U	575	575	1150	351.1	7372/21	4000	4000	7000	3.5	0.23	1.5	50	23
9.1	287	294	8.2	1.5	P731_0070K102_0470 EZ301U	805	828	1466	328.4	2299/7	4000	4000	7000	4.0	0.22	2.0	52	23
11	247	252	8.3	1.7	P731_0070K102_0400 EZ301U	501	501	887	282.1	2821/10	4000	4000	7000	4.0	0.21	2.0	52	23
11	245	251	13	1.4	P731_0100K102_0280 EZ301U	575	575	1150	280.5	5890/21	4000	4000	7000	3.5	0.26	1.5	50	23
11	415	439	12	1.1	P731_0050K202_0560 EZ302U	805	840	1392	277.7	6665/24	4000	4000	6500	4.0	0.34	2.0	53	31
12	215	220	7.6	2.0	P731_0070K102_0350 EZ301U	647	647	1413	245.7	3686/15	4000	4000	7000	4.0	0.23	2.0	52	23
12	368	388	13	1.2	P731_0070K102_0350 EZ302U	805	840	1413	245.7	3686/15	4000	4000	7000	4.0	0.33	2.0	52	24
13	206	211	7.5	2.1	P731_0070K102_0340 EZ301U	595	595	1053	235.9	4719/20	4000	4000	7000	4.0	0.22	2.0	52	23
13	353	373	13	1.2	P731_0070K102_0340 EZ302U	595	595	1053	235.9	4719/20	4000	4000	7000	4.0	0.32	2.0	52	24
13	204	208	12	1.7	P731_0100K102_0230 EZ301U	575	575	1150	232.7	11400/49	4000	4000	7000	3.5	0.28	1.5	50	23
13	348	368	21	1.0	P731_0100K102_0230 EZ302U	575	575	1150	232.7	11400/49	4000	4000	7000	3.5	0.38	1.5	50	24
13	346	365	11	1.3	P731_0050K202_0460 EZ302U	805	840	1329	231.1	1849/8	4000	4000	6500	4.0	0.36	2.0	53	31
15	172	175	7.2	2.6	P731_0070K102_0280 EZ301U	517	517	1217	196.3	589/3	4000	4000	7000	4.0	0.26	2.0	52	23
15	294	310	12	1.5	P731_0070K102_0280 EZ302U	805	840	1217	196.3	589/3	4000	4000	7000	4.0	0.36	2.0	52	24
15	382	405	16	1.2	P731_0070K102_0280 EZ303U	805	840	1217	196.3	589/3	4000	4000	7000	4.0	0.47	2.0	52	24
17	154	158	7.0	2.8	P731_0070K102_0250 EZ301U	465	465	1015	176.5	8827/50	4000	4000	7000	4.0	0.24	2.0	52	23
17	264	279	12	1.7	P731_0070K102_0250 EZ302U	764	764	1015	176.5	8827/50	4000	4000	7000	4.0	0.34	2.0	52	24
17	344	364	16	1.3	P731_0070K102_0250 EZ303U	764	764	1015	176.5	8827/50	4000	4000	7000	4.0	0.45	2.0	52	24
17	258	273	10	1.7	P731_0050K202_0350 EZ302U	805	813	1104	172.8	9675/56	4000	4000	6500	4.0	0.41	2.0	53	31
17	336	356	13	1.3	P731_0050K202_0350 EZ303U	805	831	1104	172.8	9675/56	4000	4000	6500	4.0	0.52	2.0	53	32
18	143	146	6.9	3.1	P731_0070K102_0230 EZ301U	429	429	1148	162.9	1140/7	4000	4000	7000	4.0	0.28	2.0	52	23
18	244	257	12	1.8	P731_0070K102_0230 EZ302U	766	766	1148	162.9	1140/7	4000	4000	7000	4.0	0.38	2.0	52	24
18	317	336	15	1.4	P731_0070K102_0230 EZ303U	805	840	1148	162.9	1140/7	4000	4000	7000	4.0	0.49	2.0	52	24

n_{2N} [rpm]	M_{2N} [Nm]	$M_{2,0}$ [Nm]	a_{th}	S	Type	M_{2acc} [Nm]	M_{2accHT} [Nm]	M_{2NOT} [Nm]	i	i_{exakt}	n_{1maxDB} EL1,2 [rpm]	n_{1maxDB} EL3,4,5,6 [rpm]	n_{1maxZB} [rpm]	$\Delta\varphi_2$ [arcmin]	J_1 [kgcm²]	$\Delta\varphi_{2red}$ [arcmin]	C_2 [Nm/arcmin]	m [kg]
P731K (n_{1N} = 3000 min^{-1}, $M_{2acc,max}$ = 810 Nm)																		
18	429	460	21	1.0	P731_0070K102_0230 EZ401U	805	840	1610	162.9	1140/7	4000	4000	7000	4.0	1.0	2.0	52	26
21	123	126	6.6	3.6	P731_0070K102_0200 EZ301U	372	372	874	141.1	2821/20	4000	4000	7000	4.0	0.27	2.0	52	23
21	211	223	11	2.1	P731_0070K102_0200 EZ302U	658	658	874	141.1	2821/20	4000	4000	7000	4.0	0.37	2.0	52	24
21	275	291	15	1.6	P731_0070K102_0200 EZ303U	658	658	874	141.1	2821/20	4000	4000	7000	4.0	0.48	2.0	52	24
21	372	398	20	1.2	P731_0070K102_0200 EZ401U	805	840	1588	141.1	2821/20	4000	4000	7000	4.0	1.0	2.0	52	26
21	368	394	17	1.2	P731_0050K202_0280 EZ401U	805	840	1610	139.8	559/4	4000	4000	6500	4.0	1.1	2.0	53	33
24	108	110	6.4	4.1	P731_0070K102_0175 EZ301U	324	324	922	122.9	2090/17	4000	4000	6000	4.0	0.33	2.0	52	23
24	184	194	11	2.4	P731_0070K102_0175 EZ302U	578	578	922	122.9	2090/17	4000	4000	6000	4.0	0.43	2.0	52	24
24	239	253	14	1.8	P731_0070K102_0175 EZ303U	694	694	922	122.9	2090/17	4000	4000	6000	4.0	0.54	2.0	52	24
24	324	347	19	1.4	P731_0070K102_0175 EZ401U	805	840	1610	122.9	2090/17	4000	4000	6000	4.0	1.1	2.0	52	26
26	102	105	6.3	4.3	P731_0070K102_0165 EZ301U	308	308	825	117.0	117/1	4000	4000	7000	4.0	0.29	2.0	52	23
26	175	185	11	2.5	P731_0070K102_0165 EZ302U	550	550	825	117.0	117/1	4000	4000	7000	4.0	0.39	2.0	52	24
26	228	241	14	1.9	P731_0070K102_0165 EZ303U	621	621	825	117.0	117/1	4000	4000	7000	4.0	0.50	2.0	52	24
26	308	330	19	1.4	P731_0070K102_0165 EZ401U	805	840	1588	117.0	117/1	4000	4000	7000	4.0	1.0	2.0	52	26
26	173	183	9.3	2.5	P731_0050K202_0230 EZ302U	545	545	870	115.9	14835/128	4000	4000	6500	4.0	0.53	2.0	53	31
26	226	239	12	1.9	P731_0050K202_0230 EZ303U	655	655	870	115.9	14835/128	4000	4000	6500	4.0	0.64	2.0	53	32
26	305	327	16	1.4	P731_0050K202_0230 EZ401U	805	840	1610	115.9	14835/128	4000	4000	6500	4.0	1.2	2.0	53	33
26	101	103	10	3.5	P731_0100K102_0115 EZ301U	305	305	867	115.7	2660/23	3600	3600	5500	3.5	0.43	1.5	50	23
26	173	183	18	2.0	P731_0100K102_0115 EZ302U	544	544	867	115.7	2660/23	3600	3600	5500	3.5	0.53	1.5	50	24
26	225	238	23	1.6	P731_0100K102_0115 EZ303U	575	575	867	115.7	2660/23	3600	3600	5500	3.5	0.64	1.5	50	24
26	305	326	31	1.1	P731_0100K102_0115 EZ401U	575	575	1150	115.7	2660/23	3600	3600	5500	3.5	1.2	1.5	50	26
30	148	156	10	3.0	P731_0070K102_0140 EZ302U	465	465	741	98.80	494/5	4000	4000	6000	4.0	0.48	2.0	52	24
30	192	204	14	2.3	P731_0070K102_0140 EZ303U	558	558	741	98.80	494/5	4000	4000	6000	4.0	0.59	2.0	52	24
30	260	279	18	1.7	P731_0070K102_0140 EZ401U	790	790	1610	98.80	494/5	4000	4000	6000	4.0	1.1	2.0	52	26
30	400	437	28	1.1	P731_0070K102_0140 EZ501U	805	840	1610	98.80	494/5	4000	4000	6000	4.0	3.1	2.0	52	27
30	437	483	31	1.0	P731_0070K102_0140 EZ402U	805	840	1610	98.80	494/5	4000	4000	6000	4.0	1.8	2.0	52	27
32	138	146	17	2.5	P731_0100K102_0092 EZ302U	435	435	694	92.49	17480/189	3600	3600	5500	3.5	0.62	1.5	50	24
32	180	191	22	1.9	P731_0100K102_0092 EZ303U	522	522	694	92.49	17480/189	3600	3600	5500	3.5	0.73	1.5	50	24
32	244	261	30	1.4	P731_0100K102_0092 EZ401U	575	575	1150	92.49	17480/189	3600	3600	5500	3.5	1.3	1.5	50	26
34	132	140	10	3.3	P731_0070K102_0125 EZ302U	416	416	663	88.33	3003/34	4000	4000	6000	4.0	0.45	2.0	52	24
34	172	182	13	2.6	P731_0070K102_0125 EZ303U	499	499	663	88.33	3003/34	4000	4000	6000	4.0	0.56	2.0	52	24
34	233	249	18	1.9	P731_0070K102_0125 EZ401U	706	706	1588	88.33	3003/34	4000	4000	6000	4.0	1.1	2.0	52	26
34	357	391	27	1.2	P731_0070K102_0125 EZ501U	805	840	1588	88.33	3003/34	4000	4000	6000	4.0	3.1	2.0	52	27
34	391	432	30	1.1	P731_0070K102_0125 EZ402U	805	840	1588	88.33	3003/34	4000	4000	6000	4.0	1.8	2.0	52	27
34	131	138	8.7	3.4	P731_0050K202_0175 EZ302U	411	411	655	87.35	2795/32	3900	3900	5500	4.0	0.66	2.0	53	31
34	170	180	11	2.6	P731_0050K202_0175 EZ303U	493	493	655	87.35	2795/32	3900	3900	5500	4.0	0.77	2.0	53	32
34	230	247	15	1.9	P731_0050K202_0175 EZ401U	699	699	1610	87.35	2795/32	3900	3900	5500	4.0	1.3	2.0	53	33
34	353	386	24	1.2	P731_0050K202_0175 EZ501U	805	840	1610	87.35	2795/32	3900	3900	5500	4.0	3.3	2.0	53	34
34	386	427	26	1.1	P731_0050K202_0175 EZ402U	805	840	1610	87.35	2795/32	3900	3900	5500	4.0	2.0	2.0	53	34
36	124	131	16	2.8	P731_0100K102_0083 EZ302U	391	391	623	83.09	1911/23	3600	3600	5500	3.5	0.59	1.5	50	24
36	162	171	21	2.2	P731_0100K102_0083 EZ303U	469	469	623	83.09	1911/23	3600	3600	5500	3.5	0.70	1.5	50	24
36	219	235	29	1.6	P731_0100K102_0083 EZ401U	575	575	1150	83.09	1911/23	3600	3600	5500	3.5	1.2	1.5	50	26
36	336	367	44	1.0	P731_0100K102_0083 EZ501U	575	575	1150	83.09	1911/23	3600	3600	5500	3.5	3.2	1.5	50	27
37	121	128	9.9	3.6	P731_0070K102_0115 EZ302U	381	381	607	80.96	1862/23	3600	3600	5500	4.0	0.54	2.0	52	24
37	158	167	13	2.8	P731_0070K102_0115 EZ303U	457	457	607	80.96	1862/23	3600	3600	5500	4.0	0.65	2.0	52	24
37	213	229	17	2.1	P731_0070K102_0115 EZ401U	647	647	1610	80.96	1862/23	3600	3600	5500	4.0	1.2	2.0	52	26
37	328	358	27	1.3	P731_0070K102_0115 EZ501U	805	840	1610	80.96	1862/23	3600	3600	5500	4.0	3.1	2.0	52	27
37	358	396	29	1.2	P731_0070K102_0115 EZ402U	805	840	1610	80.96	1862/23	3600	3600	5500	4.0	1.9	2.0	52	27
42	106	112	10	3.8	P731_0070K102_0100 EZ302U	334	334	532	70.98	3549/50	4000	4000	6000	4.0	0.51	2.0	52	24
42	138	146	14	2.9	P731_0070K102_0100 EZ303U	401	401	532	70.98	3549/50	4000	4000	6000	4.0	0.62	2.0	52	24
42	187	200	17	2.4	P731_0070K102_0100 EZ401U	568	568	1588	70.98	3549/50	4000	4000	6000	4.0	1.2	2.0	52	26
42	287	314	26	1.5	P731_0070K102_0100 EZ501U	805	840	1588	70.98	3549/50	4000	4000	6000	4.0	3.1	2.0	52	27
42	314	347	28	1.4	P731_0070K102_0100 EZ402U	805	840	1588	70.98	3549/50	4000	4000	6000	4.0	1.9	2.0	52	27
43	182	195	14	2.4	P731_0050K202_0140 EZ401U	554	554	1610	69.26	14405/208	3900	3900	5500	4.0	1.4	2.0	53	33
43	280	306	22	1.6	P731_0050K202_0140 EZ501U	805	840	1610	69.26	14405/208	3900	3900	5500	4.0	3.4	2.0	53	34
43	306	339	24	1.4	P731_0050K202_0140 EZ402U	805	840	1610	69.26	14405/208	3900	3900	5500	4.0	2.1	2.0	53	34
45	99	105	15	3.5	P731_0100K102_0066 EZ302U	313	313	499	66.44	598/9	3600	3600	5500	3.5	0.71	1.5	50	24
45	129	137	20	2.7	P731_0100K102_0066 EZ303U	375	375	499	66.44	598/9	3600	3600	5500	3.5	0.82	1.5	50	24
45	175	188	27	2.0	P731_0100K102_0066 EZ401U	531	531	1150	66.44	598/9	3600	3600	5500	3.5	1.3	1.5	50	26
45	269	294	42	1.3	P731_0100K102_0066 EZ501U	575	575	1150	66.44	598/9	3600	3600	5500	3.5	3.3	1.5	50	27
45	294	325	46	1.2	P731_0100K102_0066 EZ402U	575	575	1150	66.44	598/9	3600	3600	5500	3.5	2.0	1.5	50	27
46	97	102	11	3.8	P731_0070K102_0092 EZ302U	305	305	486	64.74	1748/27	3600	3600	5500	4.0	0.63	2.0	52	24
46	126	133	15	2.9	P731_0070K102_0092 EZ303U	366	366	486	64.74	1748/27	3600	3600	5500	4.0	0.74	2.0	52	24
46	171	183	16	2.6	P731_0070K102_0092 EZ401U	518	518	1610	64.74	1748/27	3600	3600	5500	4.0	1.3	2.0	52	26

n_{2N} [rpm]	M_{2N} [Nm]	$M_{2,0}$ [Nm]	a_{th}	S	Type	M_{2acc} [Nm]	M_{2accHT} [Nm]	M_{2NOT} [Nm]	i	i_{exakt}	n_{1maxDB} EL1,2 [rpm]	n_{1maxDB} EL3,4,5,6 [rpm]	n_{1maxZB} [rpm]	$\Delta\varphi_2$ [arcmin]	J_1 [kgcm²]	$\Delta\varphi_{2red}$ [arcmin]	C_2 [Nm/arcmin]	m [kg]
P731K (n_{1N} = 3000 min^{-1}, $M_{2acc,max}$ = 810 Nm)																		
46	262	286	25	1.7	P731_0070K102_0092 EZ501U	805	840	1610	64.74	1748/27	3600	3600	5500	4.0	3.2	2.0	52	27
46	286	317	28	1.5	P731_0070K102_0092 EZ402U	805	840	1610	64.74	1748/27	3600	3600	5500	4.0	2.0	2.0	52	27
46	420	524	41	1.0	P731_0070K102_0092 EZ404U	805	840	1610	64.74	1748/27	3600	3600	5500	4.0	3.3	2.0	52	29
50	158	169	27	2.2	P731_0100K102_0060 EZ401U	480	480	1150	60.00	60/1	3300	3300	5000	3.5	1.4	1.5	50	26
50	243	265	41	1.4	P731_0100K102_0060 EZ501U	575	575	1150	60.00	60/1	3300	3300	5000	3.5	3.4	1.5	50	27
50	265	294	44	1.3	P731_0100K102_0060 EZ402U	575	575	1150	60.00	60/1	3300	3300	5000	3.5	2.1	1.5	50	27
52	87	92	12	3.8	P731_0070K102_0083 EZ302U	274	274	436	58.16	13377/230	3600	3600	5500	4.0	0.59	2.0	52	24
52	113	120	16	2.9	P731_0070K102_0083 EZ303U	328	328	436	58.16	13377/230	3600	3600	5500	4.0	0.70	2.0	52	24
52	153	164	16	2.9	P731_0070K102_0083 EZ401U	465	465	1588	58.16	13377/230	3600	3600	5500	4.0	1.2	2.0	52	26
52	235	257	25	1.9	P731_0070K102_0083 EZ501U	805	840	1588	58.16	13377/230	3600	3600	5500	4.0	3.2	2.0	52	27
52	257	285	27	1.7	P731_0070K102_0083 EZ402U	805	840	1588	58.16	13377/230	3600	3600	5500	4.0	1.9	2.0	52	27
52	378	471	39	1.2	P731_0070K102_0083 EZ404U	805	840	1588	58.16	13377/230	3600	3600	5500	4.0	3.3	2.0	52	29
52	405	438	42	1.1	P731_0070K102_0083 EZ502U	805	840	1588	58.16	13377/230	3600	3600	5500	4.0	5.5	2.0	52	28
52	405	454	42	1.1	P731_0070K102_0083 EZ701U	805	840	1588	58.16	13377/230	3600	3600	5500	4.0	8.8	2.0	52	30
52	86	91	11	3.8	P731_0050K202_0115 EZ302U	272	272	433	57.73	6235/108	3500	3500	5000	4.0	0.97	2.0	53	31
52	112	119	14	2.9	P731_0050K202_0115 EZ303U	326	326	433	57.73	6235/108	3500	3500	5000	4.0	1.1	2.0	53	32
52	152	163	14	2.9	P731_0050K202_0115 EZ401U	462	462	1610	57.73	6235/108	3500	3500	5000	4.0	1.6	2.0	53	33
52	234	255	21	1.9	P731_0050K202_0115 EZ501U	805	840	1610	57.73	6235/108	3500	3500	5000	4.0	3.6	2.0	53	34
52	255	282	23	1.7	P731_0050K202_0115 EZ402U	805	840	1610	57.73	6235/108	3500	3500	5000	4.0	2.3	2.0	53	34
52	375	467	34	1.2	P731_0050K202_0115 EZ404U	805	840	1610	57.73	6235/108	3500	3500	5000	4.0	3.7	2.0	53	36
52	402	435	36	1.1	P731_0050K202_0115 EZ502U	805	840	1610	57.73	6235/108	3500	3500	5000	4.0	5.9	2.0	53	36
52	402	451	36	1.1	P731_0050K202_0115 EZ701U	805	840	1610	57.73	6235/108	3500	3500	5000	4.0	9.2	2.0	53	38
54	83	88	16	3.8	P731_0100K102_0056 EZ302U	262	262	418	55.68	15200/273	3300	3300	5000	3.5	0.97	1.5	50	24
54	108	115	21	2.9	P731_0100K102_0056 EZ303U	315	315	418	55.68	15200/273	3300	3300	5000	3.5	1.1	1.5	50	24
54	147	157	26	2.4	P731_0100K102_0056 EZ401U	445	445	1150	55.68	15200/273	3300	3300	5000	3.5	1.6	1.5	50	26
54	225	246	40	1.6	P731_0100K102_0056 EZ501U	575	575	1150	55.68	15200/273	3300	3300	5000	3.5	3.6	1.5	50	27
54	246	272	44	1.4	P731_0100K102_0056 EZ402U	575	575	1150	55.68	15200/273	3300	3300	5000	3.5	2.3	1.5	50	27
65	70	74	14	3.8	P731_0070K102_0066 EZ302U	219	219	349	46.51	2093/45	3600	3600	5500	4.0	0.72	2.0	52	24
65	91	96	19	2.9	P731_0070K102_0066 EZ303U	263	263	349	46.51	2093/45	3600	3600	5500	4.0	0.83	2.0	52	24
65	123	131	16	3.4	P731_0070K102_0066 EZ401U	372	372	1396	46.51	2093/45	3600	3600	5500	4.0	1.4	2.0	52	26
65	188	206	25	2.2	P731_0070K102_0066 EZ501U	700	700	1396	46.51	2093/45	3600	3600	5500	4.0	3.3	2.0	52	27
65	206	228	27	2.0	P731_0070K102_0066 EZ402U	700	700	1396	46.51	2093/45	3600	3600	5500	4.0	2.1	2.0	52	27
65	302	376	39	1.4	P731_0070K102_0066 EZ404U	786	786	1396	46.51	2093/45	3600	3600	5500	4.0	3.4	2.0	52	29
65	324	350	42	1.3	P731_0070K102_0066 EZ502U	786	786	1396	46.51	2093/45	3600	3600	5500	4.0	5.6	2.0	52	28
65	324	363	42	1.3	P731_0070K102_0066 EZ701U	786	786	1396	46.51	2093/45	3600	3600	5500	4.0	8.9	2.0	52	30
65	121	130	13	3.6	P731_0050K202_0092 EZ401U	367	367	1379	45.95	11395/248	3500	3500	5000	4.0	1.9	2.0	53	33
65	186	203	20	2.4	P731_0050K202_0092 EZ501U	692	692	1379	45.95	11395/248	3500	3500	5000	4.0	3.8	2.0	53	34
65	203	225	22	2.2	P731_0050K202_0092 EZ402U	692	692	1379	45.95	11395/248	3500	3500	5000	4.0	2.6	2.0	53	34
65	298	372	32	1.5	P731_0050K202_0092 EZ404U	805	840	1379	45.95	11395/248	3500	3500	5000	4.0	3.9	2.0	53	36
65	320	346	34	1.4	P731_0050K202_0092 EZ502U	805	840	1379	45.95	11395/248	3500	3500	5000	4.0	6.1	2.0	53	36
65	320	359	34	1.4	P731_0050K202_0092 EZ701U	805	840	1610	45.95	11395/248	3500	3500	5000	4.0	9.4	2.0	53	38
65	419	480	45	1.0	P731_0050K202_0092 EZ503U	805	840	1379	45.95	11395/248	3500	3500	5000	4.0	8.5	2.0	53	37
71	111	119	16	3.6	P731_0070K102_0060 EZ401U	336	336	1260	42.00	42/1	3300	3300	5000	4.0	1.4	2.0	52	26
71	170	186	25	2.4	P731_0070K102_0060 EZ501U	632	632	1260	42.00	42/1	3300	3300	5000	4.0	3.4	2.0	52	27
71	186	205	27	2.2	P731_0070K102_0060 EZ402U	632	632	1260	42.00	42/1	3300	3300	5000	4.0	2.1	2.0	52	27
71	273	340	40	1.5	P731_0070K102_0060 EZ404U	760	760	1260	42.00	42/1	3300	3300	5000	4.0	3.5	2.0	52	29
71	292	316	43	1.4	P731_0070K102_0060 EZ502U	760	760	1260	42.00	42/1	3300	3300	5000	4.0	5.7	2.0	52	28
71	292	328	43	1.4	P731_0070K102_0060 EZ701U	760	760	1260	42.00	42/1	3300	3300	5000	4.0	9.0	2.0	52	30
71	383	439	56	1.0	P731_0070K102_0060 EZ503U	760	760	1260	42.00	42/1	3300	3300	5000	4.0	8.1	2.0	52	30
71	82	87	17	2.9	P731_0050K202_0084 EZ303U	237	237	315	41.99	12470/297	3500	3500	5000	4.0	1.2	2.0	53	32
71	111	119	13	4.0	P731_0050K202_0084 EZ401U	336	336	1260	41.99	12470/297	3500	3500	5000	4.0	1.7	2.0	53	33
71	170	186	20	2.6	P731_0050K202_0084 EZ501U	632	632	1260	41.99	12470/297	3500	3500	5000	4.0	3.7	2.0	53	34
71	186	205	21	2.4	P731_0050K202_0084 EZ402U	632	632	1260	41.99	12470/297	3500	3500	5000	4.0	2.4	2.0	53	34
71	273	340	31	1.6	P731_0050K202_0084 EZ404U	805	840	1260	41.99	12470/297	3500	3500	5000	4.0	3.8	2.0	53	36
71	292	316	34	1.5	P731_0050K202_0084 EZ502U	805	840	1260	41.99	12470/297	3500	3500	5000	4.0	6.0	2.0	53	36
71	292	328	34	1.5	P731_0050K202_0084 EZ701U	790	790	1610	41.99	12470/297	3500	3500	5000	4.0	9.3	2.0	53	38
71	383	438	44	1.1	P731_0050K202_0084 EZ503U	805	840	1260	41.99	12470/297	3500	3500	5000	4.0	8.4	2.0	53	37
75	78	82	27	2.9	P731_0100K102_0040 EZ303U	226	226	300	40.00	40/1	3300	3300	5000	3.5	1.3	1.5	50	24
75	105	113	24	3.3	P731_0100K102_0040 EZ401U	320	320	1150	40.00	40/1	3300	3300	5000	3.5	1.8	1.5	50	26
75	162	177	37	2.2	P731_0100K102_0040 EZ501U	575	575	1150	40.00	40/1	3300	3300	5000	3.5	3.8	1.5	50	27
75	177	196	40	2.0	P731_0100K102_0040 EZ402U	575	575	1150	40.00	40/1	3300	3300	5000	3.5	2.5	1.5	50	27
75	260	324	59	1.3	P731_0100K102_0040 EZ404U	575	575	1150	40.00	40/1	3300	3300	5000	3.5	3.9	1.5	50	29
75	279	301	63	1.3	P731_0100K102_0040 EZ502U	575	575	1150	40.00	40/1	3300	3300	5000	3.5	6.1	1.5	50	28
75	279	312	63	1.3	P731_0100K102_0040 EZ701U	575	575	1150	40.00	40/1	3300	3300	5000	3.5	9.4	1.5	50	30

n_{2N} [rpm]	M_{2N} [Nm]	$M_{2,0}$ [Nm]	a_{th}	S	Type	M_{2acc} [Nm]	M_{2accHT} [Nm]	M_{2NOT} [Nm]	i	i_{exakt}	n_{1maxDB} EL1,2 [rpm]	n_{1maxDB} EL3,4,5,6 [rpm]	n_{1maxZB} [rpm]	$\Delta\varphi_2$ [arcmin]	J_1 [kgcm²]	$\Delta\varphi_{2red}$ [arcmin]	C_2 [Nm/arcmin]	m [kg]
P731K (n_{1N} = 3000 min^{-1}, $M_{2acc,max}$ = 810 Nm)																		
77	58	62	16	3.8	P731_0070K102_0056 EZ302U	183	183	293	38.98	1520/39	3300	3300	5000	4.0	0.99	2.0	52	24
77	76	80	21	2.9	P731_0070K102_0056 EZ303U	220	220	293	38.98	1520/39	3300	3300	5000	4.0	1.1	2.0	52	24
77	103	110	16	3.8	P731_0070K102_0056 EZ401U	312	312	1170	38.98	1520/39	3300	3300	5000	4.0	1.6	2.0	52	26
77	158	172	25	2.5	P731_0070K102_0056 EZ501U	587	587	1170	38.98	1520/39	3300	3300	5000	4.0	3.6	2.0	52	27
77	172	191	27	2.3	P731_0070K102_0056 EZ402U	587	587	1170	38.98	1520/39	3300	3300	5000	4.0	2.3	2.0	52	27
77	253	315	40	1.5	P731_0070K102_0056 EZ404U	741	741	1170	38.98	1520/39	3300	3300	5000	4.0	3.7	2.0	52	29
77	271	293	43	1.4	P731_0070K102_0056 EZ502U	741	741	1170	38.98	1520/39	3300	3300	5000	4.0	5.9	2.0	52	28
77	271	304	43	1.4	P731_0070K102_0056 EZ701U	733	733	1170	38.98	1520/39	3300	3300	5000	4.0	9.2	2.0	52	30
77	356	407	56	1.1	P731_0070K102_0056 EZ503U	741	741	1170	38.98	1520/39	3300	3300	5000	4.0	8.3	2.0	52	30
90	88	94	12	5.0	P731_0050K202_0067 EZ401U	267	267	1003	33.42	11395/341	3500	3500	5000	4.0	2.1	2.0	53	33
90	135	148	18	3.3	P731_0050K202_0067 EZ501U	503	503	1003	33.42	11395/341	3500	3500	5000	4.0	4.0	2.0	53	34
90	148	163	20	3.0	P731_0050K202_0067 EZ402U	503	503	1003	33.42	11395/341	3500	3500	5000	4.0	2.8	2.0	53	34
90	217	270	30	2.0	P731_0050K202_0067 EZ404U	755	755	1003	33.42	11395/341	3500	3500	5000	4.0	4.1	2.0	53	36
90	233	252	32	1.9	P731_0050K202_0067 EZ502U	755	755	1003	33.42	11395/341	3500	3500	5000	4.0	6.3	2.0	53	36
90	233	261	32	1.9	P731_0050K202_0067 EZ701U	629	629	1610	33.42	11395/341	3500	3500	5000	4.0	9.6	2.0	53	38
90	305	349	42	1.4	P731_0050K202_0067 EZ503U	755	755	1003	33.42	11395/341	3500	3500	5000	4.0	8.7	2.0	53	37
90	377	453	52	1.2	P731_0050K202_0067 EZ702U	805	840	1610	33.42	11395/341	3500	3500	5000	4.0	15	2.0	53	40
90	424	503	58	1.0	P731_0050K202_0067 EZ505U	805	840	1610	33.42	11395/341	3500	3500	5000	4.0	13	2.0	53	40
100	121	133	18	3.6	P731_0050K202_0060 EZ501U	452	452	900	30.00	30/1	3000	3000	4500	4.0	4.6	2.0	53	34
100	133	147	20	3.3	P731_0050K202_0060 EZ402U	452	452	900	30.00	30/1	3000	3000	4500	4.0	3.4	2.0	53	34
100	195	243	29	2.3	P731_0050K202_0060 EZ404U	677	677	900	30.00	30/1	3000	3000	4500	4.0	4.7	2.0	53	36
100	209	226	31	2.1	P731_0050K202_0060 EZ502U	677	677	900	30.00	30/1	3000	3000	4500	4.0	6.9	2.0	53	36
100	209	234	31	2.1	P731_0050K202_0060 EZ701U	565	565	1610	30.00	30/1	3000	3000	4500	4.0	10	2.0	53	38
100	274	313	41	1.6	P731_0050K202_0060 EZ503U	677	677	900	30.00	30/1	3000	3000	4500	4.0	9.3	2.0	53	37
100	339	406	50	1.3	P731_0050K202_0060 EZ702U	805	840	1610	30.00	30/1	3000	3000	4500	4.0	15	2.0	53	40
100	381	452	56	1.2	P731_0050K202_0060 EZ505U	805	840	1610	30.00	30/1	3000	3000	4500	4.0	14	2.0	53	40
107	55	58	27	2.9	P731_0070K102_0040 EZ303U	158	158	210	28.00	28/1	3300	3300	5000	4.0	1.3	2.0	52	24
107	74	79	17	4.8	P731_0070K102_0040 EZ401U	224	224	841	28.00	28/1	3300	3300	5000	4.0	1.9	2.0	52	26
107	113	124	26	3.1	P731_0070K102_0040 EZ501U	422	422	841	28.00	28/1	3300	3300	5000	4.0	3.8	2.0	52	27
107	124	137	28	2.8	P731_0070K102_0040 EZ402U	422	422	841	28.00	28/1	3300	3300	5000	4.0	2.6	2.0	52	27
107	182	227	41	1.9	P731_0070K102_0040 EZ404U	633	633	841	28.00	28/1	3300	3300	5000	4.0	3.9	2.0	52	29
107	195	211	44	1.8	P731_0070K102_0040 EZ502U	633	633	841	28.00	28/1	3300	3300	5000	4.0	6.1	2.0	52	28
107	195	219	44	1.8	P731_0070K102_0040 EZ701U	527	527	841	28.00	28/1	3300	3300	5000	4.0	9.4	2.0	52	30
107	256	292	58	1.4	P731_0070K102_0040 EZ503U	633	633	841	28.00	28/1	3300	3300	5000	4.0	8.5	2.0	52	30
116	180	202	30	2.4	P731_0050K202_0052 EZ701U	487	487	1610	25.89	10535/407	3000	3000	4500	4.0	10	2.0	53	38
116	292	351	48	1.5	P731_0050K202_0052 EZ702U	805	840	1610	25.89	10535/407	3000	3000	4500	4.0	15	2.0	53	40
116	329	390	54	1.3	P731_0050K202_0052 EZ505U	805	840	1610	25.89	10535/407	3000	3000	4500	4.0	14	2.0	53	40
116	402	507	67	1.1	P731_0050K202_0052 EZ703U	805	840	1610	25.89	10535/407	3000	3000	4500	4.0	23	2.0	53	42
150	139	156	28	3.2	P731_0050K202_0040 EZ701U	376	376	1500	20.00	20/1	3000	3000	4500	4.0	11	2.0	53	38
150	226	271	45	1.9	P731_0050K202_0040 EZ702U	772	772	1500	20.00	20/1	3000	3000	4500	4.0	16	2.0	53	40
150	254	301	51	1.7	P731_0050K202_0040 EZ505U	805	840	1500	20.00	20/1	3000	3000	4500	4.0	15	2.0	53	40
150	310	391	62	1.4	P731_0050K202_0040 EZ703U	805	840	1500	20.00	20/1	3000	3000	4500	4.0	24	2.0	53	42
188	111	125	27	3.2	P731_0040K202_0040 EZ701U	301	301	1200	16.00	16/1	3000	3000	4500	4.5	11	2.5	49	38
188	181	217	45	2.0	P731_0040K202_0040 EZ702U	617	617	1200	16.00	16/1	3000	3000	4500	4.5	16	2.5	49	40
188	203	241	50	1.8	P731_0040K202_0040 EZ505U	677	677	1200	16.00	16/1	3000	3000	4500	4.5	15	2.5	49	40
188	248	313	61	1.4	P731_0040K202_0040 EZ703U	677	677	1200	16.00	16/1	3000	3000	4500	4.5	24	2.5	49	42
250	84	94	27	3.2	P731_0030K202_0040 EZ701U	226	226	900	12.00	12/1	3000	3000	4500	4.5	11	2.5	40	38
250	135	163	45	2.0	P731_0030K202_0040 EZ702U	463	463	900	12.00	12/1	3000	3000	4500	4.5	17	2.5	40	40
250	152	181	50	1.8	P731_0030K202_0040 EZ505U	500	500	900	12.00	12/1	3000	3000	4500	4.5	15	2.5	40	40
250	186	235	61	1.4	P731_0030K202_0040 EZ703U	500	500	900	12.00	12/1	3000	3000	4500	4.5	25	2.5	40	42
P731K (n_{1N} = 4500 min^{-1}, $M_{2acc,max}$ = 810 Nm)																		
98	411	661	44	1.1	P731_0050K202_0092 EZ505U	805	840	1610	45.95	11395/248	3500	3500	5000	4.0	13	2.0	53	40
107	375	604	43	1.2	P731_0050K202_0084 EZ505U	805	840	1610	41.99	12470/297	3500	3500	5000	4.0	13	2.0	53	40
135	299	481	41	1.5	P731_0050K202_0067 EZ505U	805	840	1610	33.42	11395/341	3500	3500	5000	4.0	13	2.0	53	40
135	380	629	52	1.2	P731_0050K202_0067 EZ703U	805	840	1610	33.42	11395/341	3500	3500	5000	4.0	23	2.0	53	42
150	268	432	40	1.6	P731_0050K202_0060 EZ505U	805	840	1610	30.00	30/1	3000	3000	4500	4.0	14	2.0	53	40
150	342	565	51	1.3	P731_0050K202_0060 EZ703U	805	840	1610	30.00	30/1	3000	3000	4500	4.0	23	2.0	53	42
174	231	373	40	1.8	P731_0050K202_0052 EZ505U	805	840	1610	25.89	10535/407	3000	3000	4500	4.0	14	2.0	53	40
174	295	487	50	1.4	P731_0050K202_0052 EZ703U	805	840	1610	25.89	10535/407	3000	3000	4500	4.0	23	2.0	53	42
225	179	288	40	2.2	P731_0050K202_0040 EZ505U	805	840	1500	20.00	20/1	3000	3000	4500	4.0	15	2.0	53	40
225	228	376	51	1.7	P731_0050K202_0040 EZ703U	805	840	1500	20.00	20/1	3000	3000	4500	4.0	24	2.0	53	42
281	143	230	40	2.2	P731_0040K202_0040 EZ505U	677	677	1200	16.00	16/1	3000	3000	4500	4.5	15	2.5	49	40
281	182	301	51	1.7	P731_0040K202_0040 EZ703U	677	677	1200	16.00	16/1	3000	3000	4500	4.5	24	2.5	49	42

n_{2N} [rpm]	M_{2N} [Nm]	$M_{2,0}$ [Nm]	a_{th}	S	Type	M_{2acc} [Nm]	M_{2accHT} [Nm]	M_{2NOT} [Nm]	i	i_{exakt}	n_{1maxDB} EL1,2 [rpm]	n_{1maxDB} EL3,4,5,6 [rpm]	n_{1maxZB} [rpm]	$\Delta\varphi_2$ [arcmin]	J_1 [kgcm²]	$\Delta\varphi_{2red}$ [arcmin]	C_2 [Nm/arcmin]	m [kg]
P731K (n_{1N} = 4500 min^{-1}, $M_{2acc,max}$ = 810 Nm)																		
375	107	173	40	2.2	P731_0030K202_0040 EZ505U	500	500	900	12.00	12/1	3000	3000	4500	4.5	15	2.5	40	40
375	137	226	51	1.7	P731_0030K202_0040 EZ703U	500	500	900	12.00	12/1	3000	3000	4500	4.5	25	2.5	40	42
P731K (n_{1N} = 6000 min^{-1}, $M_{2acc,max}$ = 810 Nm)																		
12	410	438	8.7	1.1	P731_0070K102_0700 EZ301U	566	566	1003	490.2	2451/5	4000	4000	7000	4.0	0.20	2.0	52	23
15	329	351	8.2	1.3	P731_0070K102_0560 EZ301U	697	697	1235	392.7	1178/3	4000	4000	7000	4.0	0.21	2.0	52	23
17	295	315	10	1.2	P731_0070K102_0500 EZ301U	407	407	721	352.2	35217/100	4000	4000	7000	4.0	0.21	2.0	52	23
17	294	314	13	1.2	P731_0100K102_0350 EZ301U	575	575	1150	351.1	7372/21	4000	4000	7000	3.5	0.23	1.5	50	23
18	275	294	7.8	1.6	P731_0070K102_0470 EZ301U	805	828	1466	328.4	2299/7	4000	4000	7000	4.0	0.22	2.0	52	23
21	236	252	8.0	1.8	P731_0070K102_0400 EZ301U	501	501	887	282.1	2821/10	4000	4000	7000	4.0	0.21	2.0	52	23
21	398	446	13	1.0	P731_0070K102_0400 EZ302U	501	501	887	282.1	2821/10	4000	4000	7000	4.0	0.31	2.0	52	24
21	235	251	12	1.5	P731_0100K102_0280 EZ301U	575	575	1150	280.5	5890/21	4000	4000	7000	3.5	0.26	1.5	50	23
22	392	439	11	1.1	P731_0050K202_0560 EZ302U	805	840	1392	277.7	6665/24	4000	4000	6500	4.0	0.34	2.0	53	31
24	206	220	7.3	2.1	P731_0070K102_0350 EZ301U	647	647	1413	245.7	3686/15	4000	4000	7000	4.0	0.23	2.0	52	23
24	347	388	12	1.3	P731_0070K102_0350 EZ302U	805	840	1413	245.7	3686/15	4000	4000	7000	4.0	0.33	2.0	52	24
25	198	211	7.2	2.2	P731_0070K102_0340 EZ301U	595	595	1053	235.9	4719/20	4000	4000	7000	4.0	0.22	2.0	52	23
25	333	373	12	1.3	P731_0070K102_0340 EZ302U	595	595	1053	235.9	4719/20	4000	4000	7000	4.0	0.32	2.0	52	24
25	435	500	16	1.0	P731_0070K102_0340 EZ303U	595	595	1053	235.9	4719/20	4000	4000	7000	4.0	0.43	2.0	52	24
26	195	208	12	1.8	P731_0100K102_0230 EZ301U	575	575	1150	232.7	11400/49	4000	4000	7000	3.5	0.28	1.5	50	23
26	328	368	20	1.1	P731_0100K102_0230 EZ302U	575	575	1150	232.7	11400/49	4000	4000	7000	3.5	0.38	1.5	50	24
26	326	365	10	1.3	P731_0050K202_0460 EZ302U	805	840	1329	231.1	1849/8	4000	4000	6500	4.0	0.36	2.0	53	31
26	426	489	14	1.0	P731_0050K202_0460 EZ303U	805	840	1329	231.1	1849/8	4000	4000	6500	4.0	0.47	2.0	53	32
31	164	175	6.9	2.7	P731_0070K102_0280 EZ301U	517	517	1217	196.3	589/3	4000	4000	7000	4.0	0.26	2.0	52	23
31	277	310	12	1.6	P731_0070K102_0280 EZ302U	805	840	1217	196.3	589/3	4000	4000	7000	4.0	0.36	2.0	52	24
31	362	416	15	1.2	P731_0070K102_0280 EZ303U	805	840	1217	196.3	589/3	4000	4000	7000	4.0	0.47	2.0	52	24
31	425	517	18	1.0	P731_0070K102_0280 EZ401U	805	840	1610	196.3	589/3	4000	4000	7000	4.0	1.0	2.0	52	26
34	148	158	6.7	3.0	P731_0070K102_0250 EZ301U	465	465	1015	176.5	8827/50	4000	4000	7000	4.0	0.24	2.0	52	23
34	249	279	11	1.8	P731_0070K102_0250 EZ302U	764	764	1015	176.5	8827/50	4000	4000	7000	4.0	0.34	2.0	52	24
34	326	374	15	1.4	P731_0070K102_0250 EZ303U	764	764	1015	176.5	8827/50	4000	4000	7000	4.0	0.45	2.0	52	24
34	382	465	17	1.2	P731_0070K102_0250 EZ401U	783	783	1386	176.5	8827/50	4000	4000	7000	4.0	0.98	2.0	52	26
35	244	273	9.7	1.8	P731_0050K202_0350 EZ302U	805	813	1104	172.8	9675/56	4000	4000	6500	4.0	0.41	2.0	53	31
35	319	366	13	1.4	P731_0050K202_0350 EZ303U	805	831	1104	172.8	9675/56	4000	4000	6500	4.0	0.52	2.0	53	32
35	374	455	15	1.2	P731_0050K202_0350 EZ401U	805	840	1610	172.8	9675/56	4000	4000	6500	4.0	1.1	2.0	53	33
37	136	146	6.6	3.2	P731_0070K102_0230 EZ301U	429	429	1148	162.9	1140/7	4000	4000	7000	4.0	0.28	2.0	52	23
37	230	257	11	1.9	P731_0070K102_0230 EZ302U	766	766	1148	162.9	1140/7	4000	4000	7000	4.0	0.38	2.0	52	24
37	300	345	14	1.5	P731_0070K102_0230 EZ303U	805	840	1148	162.9	1140/7	4000	4000	7000	4.0	0.49	2.0	52	24
37	352	429	17	1.2	P731_0070K102_0230 EZ401U	805	840	1610	162.9	1140/7	4000	4000	7000	4.0	1.0	2.0	52	26
43	118	126	6.4	3.7	P731_0070K102_0200 EZ301U	372	372	874	141.1	2821/20	4000	4000	7000	4.0	0.27	2.0	52	23
43	199	223	11	2.2	P731_0070K102_0200 EZ302U	658	658	874	141.1	2821/20	4000	4000	7000	4.0	0.37	2.0	52	24
43	260	299	14	1.7	P731_0070K102_0200 EZ303U	658	658	874	141.1	2821/20	4000	4000	7000	4.0	0.48	2.0	52	24
43	305	372	16	1.4	P731_0070K102_0200 EZ401U	805	840	1588	141.1	2821/20	4000	4000	7000	4.0	1.0	2.0	52	26
43	302	368	14	1.5	P731_0050K202_0280 EZ401U	805	840	1610	139.8	559/4	4000	4000	6500	4.0	1.1	2.0	53	33
49	103	110	6.1	4.3	P731_0070K102_0175 EZ301U	324	324	922	122.9	2090/17	4000	4000	6000	4.0	0.33	2.0	52	23
49	174	194	10	2.5	P731_0070K102_0175 EZ302U	578	578	922	122.9	2090/17	4000	4000	6000	4.0	0.43	2.0	52	24
49	227	260	14	1.9	P731_0070K102_0175 EZ303U	694	694	922	122.9	2090/17	4000	4000	6000	4.0	0.54	2.0	52	24
49	266	324	16	1.7	P731_0070K102_0175 EZ401U	805	840	1610	122.9	2090/17	4000	4000	6000	4.0	1.1	2.0	52	26
49	393	509	23	1.1	P731_0070K102_0175 EZ501U	805	840	1610	122.9	2090/17	4000	4000	6000	4.0	3.0	2.0	52	27
49	405	567	24	1.1	P731_0070K102_0175 EZ402U	805	840	1610	122.9	2090/17	4000	4000	6000	4.0	1.8	2.0	52	27
51	98	105	6.1	4.5	P731_0070K102_0165 EZ301U	308	308	825	117.0	117/1	4000	4000	7000	4.0	0.29	2.0	52	23
51	165	185	10	2.7	P731_0070K102_0165 EZ302U	550	550	825	117.0	117/1	4000	4000	7000	4.0	0.39	2.0	52	24
51	216	248	13	2.0	P731_0070K102_0165 EZ303U	621	621	825	117.0	117/1	4000	4000	7000	4.0	0.50	2.0	52	24
51	253	308	16	1.7	P731_0070K102_0165 EZ401U	805	840	1588	117.0	117/1	4000	4000	7000	4.0	1.0	2.0	52	26
51	374	484	23	1.2	P731_0070K102_0165 EZ501U	805	840	1588	117.0	117/1	4000	4000	7000	4.0	3.0	2.0	52	27
51	385	539	24	1.1	P731_0070K102_0165 EZ402U	805	840	1588	117.0	117/1	4000	4000	7000	4.0	1.7	2.0	52	27
52	164	183	8.8	2.7	P731_0050K202_0230 EZ302U	545	545	870	115.9	14835/128	4000	4000	6500	4.0	0.53	2.0	53	31
52	214	245	11	2.1	P731_0050K202_0230 EZ303U	655	655	870	115.9	14835/128	4000	4000	6500	4.0	0.64	2.0	53	32
52	251	305	13	1.8	P731_0050K202_0230 EZ401U	805	840	1610	115.9	14835/128	4000	4000	6500	4.0	1.2	2.0	53	33
52	371	480	20	1.2	P731_0050K202_0230 EZ501U	805	840	1610	115.9	14835/128	4000	4000	6500	4.0	3.1	2.0	53	34
52	382	534	21	1.2	P731_0050K202_0230 EZ402U	805	840	1610	115.9	14835/128	4000	4000	6500	4.0	1.9	2.0	53	34
61	139	156	10	3.0	P731_0070K102_0140 EZ302U	465	465	741	98.80	494/5	4000	4000	6000	4.0	0.48	2.0	52	24
61	182	209	13	2.3	P731_0070K102_0140 EZ303U	558	558	741	98.80	494/5	4000	4000	6000	4.0	0.59	2.0	52	24
61	214	260	16	2.0	P731_0070K102_0140 EZ401U	790	790	1610	98.80	494/5	4000	4000	6000	4.0	1.1	2.0	52	26
61	316	409	23	1.3	P731_0070K102_0140 EZ501U	805	840	1610	98.80	494/5	4000	4000	6000	4.0	3.1	2.0	52	27
61	325	455	24	1.3	P731_0070K102_0140 EZ402U	805	840	1610	98.80	494/5	4000	4000	6000	4.0	1.8	2.0	52	27
68	125	140	10	3.3	P731_0070K102_0125 EZ302U	416	416	663	88.33	3003/34	4000	4000	6000	4.0	0.45	2.0	52	24

n_{2N} [rpm]	M_{2N} [Nm]	$M_{2,0}$ [Nm]	a_{th}	S	Type	M_{2acc} [Nm]	M_{2accHT} [Nm]	M_{2NOT} [Nm]	i	i_{exakt}	n_{1maxDB} EL1,2 [rpm]	n_{1maxDB} EL3,4,5,6 [rpm]	n_{1maxZB} [rpm]	$\Delta\varphi_2$ [arcmin]	J_1 [kgcm²]	$\Delta\varphi_{2red}$ [arcmin]	C_2 [Nm/arcmin]	m [kg]
P731K (n_{1N} = 6000 min^{-1}, $M_{2acc,max}$ = 810 Nm)																		
68	163	187	13	2.5	P731_0070K102_0125 EZ303U	499	499	663	88.33	3003/34	4000	4000	6000	4.0	0.56	2.0	52	24
68	191	233	16	2.1	P731_0070K102_0125 EZ401U	706	706	1588	88.33	3003/34	4000	4000	6000	4.0	1.1	2.0	52	26
68	283	366	23	1.4	P731_0070K102_0125 EZ501U	805	840	1588	88.33	3003/34	4000	4000	6000	4.0	3.1	2.0	52	27
68	291	407	24	1.4	P731_0070K102_0125 EZ402U	805	840	1588	88.33	3003/34	4000	4000	6000	4.0	1.8	2.0	52	27
85	100	112	10	3.8	P731_0070K102_0100 EZ302U	334	334	532	70.98	3549/50	4000	4000	6000	4.0	0.51	2.0	52	24
85	131	150	14	2.9	P731_0070K102_0100 EZ303U	401	401	532	70.98	3549/50	4000	4000	6000	4.0	0.62	2.0	52	24
85	154	187	16	2.5	P731_0070K102_0100 EZ401U	568	568	1588	70.98	3549/50	4000	4000	6000	4.0	1.2	2.0	52	26
85	227	294	24	1.7	P731_0070K102_0100 EZ501U	805	840	1588	70.98	3549/50	4000	4000	6000	4.0	3.1	2.0	52	27
85	234	327	24	1.6	P731_0070K102_0100 EZ402U	805	840	1588	70.98	3549/50	4000	4000	6000	4.0	1.9	2.0	52	27
85	347	521	36	1.1	P731_0070K102_0100 EZ502U	805	840	1588	70.98	3549/50	4000	4000	6000	4.0	5.4	2.0	52	28
85	347	528	36	1.1	P731_0070K102_0100 EZ701U	805	840	1588	70.98	3549/50	4000	4000	6000	4.0	8.7	2.0	52	30
P831K (n_{1N} = 3000 min^{-1}, $M_{2acc,max}$ = 1840 Nm)																		
5.4	831	878	12	1.0	P831_0100K202_0560 EZ302U	1380	1380	2760	555.4	6665/12	4000	4000	6500	3.5	0.34	1.5	132	47
6.2	727	768	8.4	1.2	P831_0070K202_0690 EZ302U	1078	1078	1828	486.0	46655/96	4000	4000	6500	3.5	0.33	1.5	128	47
6.5	692	731	11	1.2	P831_0100K202_0460 EZ302U	1380	1380	2659	462.3	1849/4	4000	4000	6500	3.5	0.36	1.5	132	47
7.7	582	615	7.1	1.7	P831_0070K202_0560 EZ302U	1294	1294	1949	388.8	9331/24	4000	4000	6500	3.5	0.35	1.5	128	47
7.7	757	801	9.3	1.3	P831_0070K202_0560 EZ303U	1294	1294	1949	388.8	9331/24	4000	4000	6500	3.5	0.46	1.5	128	47
8.5	529	559	11	1.2	P831_0070K202_0500 EZ302U	784	784	1329	353.4	46655/132	4000	4000	6500	3.5	0.33	1.5	128	47
8.7	517	546	11	1.6	P831_0100K202_0350 EZ302U	1380	1380	2209	345.5	9675/28	4000	4000	6500	3.5	0.41	1.5	132	47
8.7	673	712	14	1.3	P831_0100K202_0350 EZ303U	1380	1380	2209	345.5	9675/28	4000	4000	6500	3.5	0.52	1.5	132	47
9.3	484	511	6.8	2.1	P831_0070K202_0460 EZ302U	1401	1401	1861	323.6	12943/40	4000	4000	6500	3.5	0.37	1.5	128	47
9.3	630	667	8.9	1.6	P831_0070K202_0460 EZ303U	1401	1401	1861	323.6	12943/40	4000	4000	6500	3.5	0.48	1.5	128	47
9.3	852	913	12	1.2	P831_0070K202_0460 EZ401U	1494	1494	2887	323.6	12943/40	4000	4000	6500	3.5	1.0	1.5	128	49
11	423	447	8.4	1.9	P831_0070K202_0400 EZ302U	941	941	1418	282.8	9331/33	4000	4000	6500	3.5	0.35	1.5	128	47
11	551	583	11	1.4	P831_0070K202_0400 EZ303U	941	941	1418	282.8	9331/33	4000	4000	6500	3.5	0.46	1.5	128	47
11	745	798	15	1.1	P831_0070K202_0400 EZ401U	941	941	1418	282.8	9331/33	4000	4000	6500	3.5	0.99	1.5	128	49
11	736	789	18	1.2	P831_0100K202_0280 EZ401U	1380	1380	2760	279.5	559/2	4000	4000	6500	3.5	1.1	1.5	132	49
11	734	786	9.0	1.5	P831_0050K302_0560 EZ401U	1541	1541	2729	278.5	12255/44	3800	3800	6000	4.0	1.0	2.0	128	54
12	362	382	6.3	2.8	P831_0070K202_0350 EZ302U	1138	1138	1546	241.9	1935/8	4000	4000	6500	3.5	0.42	1.5	128	47
12	471	498	8.3	2.1	P831_0070K202_0350 EZ303U	1164	1164	1546	241.9	1935/8	4000	4000	6500	3.5	0.53	1.5	128	47
12	637	683	11	1.6	P831_0070K202_0350 EZ401U	1494	1494	2887	241.9	1935/8	4000	4000	6500	3.5	1.1	1.5	128	49
12	979	1070	17	1.0	P831_0070K202_0350 EZ501U	1494	1494	2887	241.9	1935/8	4000	4000	6500	3.5	3.0	1.5	128	50
13	352	372	6.3	2.8	P831_0070K202_0340 EZ302U	1019	1019	1353	235.3	12943/55	4000	4000	6500	3.5	0.38	1.5	128	47
13	458	485	8.2	2.2	P831_0070K202_0340 EZ303U	1019	1019	1353	235.3	12943/55	4000	4000	6500	3.5	0.49	1.5	128	47
13	620	664	11	1.6	P831_0070K202_0340 EZ401U	1255	1255	2223	235.3	12943/55	4000	4000	6500	3.5	1.0	1.5	128	49
13	952	1041	17	1.1	P831_0070K202_0340 EZ501U	1255	1255	2223	235.3	12943/55	4000	4000	6500	3.5	3.0	1.5	128	50
13	347	366	9.7	2.5	P831_0100K202_0230 EZ302U	1091	1091	1739	231.8	14835/64	4000	4000	6500	3.5	0.53	1.5	132	47
13	451	478	13	1.9	P831_0100K202_0230 EZ303U	1309	1309	1739	231.8	14835/64	4000	4000	6500	3.5	0.64	1.5	132	47
13	611	654	17	1.4	P831_0100K202_0230 EZ401U	1380	1380	2760	231.8	14835/64	4000	4000	6500	3.5	1.2	1.5	132	49
13	609	652	8.6	1.8	P831_0050K302_0460 EZ401U	1840	1848	3230	231.1	1849/8	3800	3800	6000	4.0	1.1	2.0	128	54
13	935	1022	13	1.2	P831_0050K302_0460 EZ501U	1840	1867	3230	231.1	1849/8	3800	3800	6000	4.0	3.1	2.0	128	55
13	1022	1131	14	1.1	P831_0050K302_0460 EZ402U	1840	1867	3230	231.1	1849/8	3800	3800	6000	4.0	1.8	2.0	128	55
15	515	552	11	1.9	P831_0070K202_0280 EZ401U	1494	1494	2887	195.7	3913/20	4000	4000	6500	3.5	1.1	1.5	128	49
15	792	865	16	1.3	P831_0070K202_0280 EZ501U	1494	1494	2887	195.7	3913/20	4000	4000	6500	3.5	3.1	1.5	128	50
15	865	957	18	1.2	P831_0070K202_0280 EZ402U	1494	1494	2887	195.7	3913/20	4000	4000	6500	3.5	1.8	1.5	128	50
17	263	278	6.9	3.2	P831_0070K202_0250 EZ302U	828	828	1125	175.9	1935/11	4000	4000	6500	3.5	0.43	1.5	128	47
17	343	362	9.0	2.5	P831_0070K202_0250 EZ303U	846	846	1125	175.9	1935/11	4000	4000	6500	3.5	0.54	1.5	128	47
17	463	497	10	2.2	P831_0070K202_0250 EZ401U	1407	1407	2887	175.9	1935/11	4000	4000	6500	3.5	1.1	1.5	128	49
17	712	778	16	1.4	P831_0070K202_0250 EZ501U	1494	1494	2887	175.9	1935/11	4000	4000	6500	3.5	3.0	1.5	128	50
17	778	861	17	1.3	P831_0070K202_0250 EZ402U	1494	1494	2887	175.9	1935/11	4000	4000	6500	3.5	1.8	1.5	128	50
17	261	276	9.0	3.3	P831_0100K202_0175 EZ302U	822	822	1310	174.7	2795/16	3900	3900	5500	3.5	0.66	1.5	132	47
17	340	360	12	2.5	P831_0100K202_0175 EZ303U	986	986	1310	174.7	2795/16	3900	3900	5500	3.5	0.77	1.5	132	47
17	460	493	16	1.8	P831_0100K202_0175 EZ401U	1380	1380	2760	174.7	2795/16	3900	3900	5500	3.5	1.3	1.5	132	49
17	707	773	24	1.2	P831_0100K202_0175 EZ501U	1380	1380	2760	174.7	2795/16	3900	3900	5500	3.5	3.3	1.5	132	50
17	773	855	27	1.1	P831_0100K202_0175 EZ402U	1380	1380	2760	174.7	2795/16	3900	3900	5500	3.5	2.0	1.5	132	50
17	457	490	8.0	2.4	P831_0050K302_0350 EZ401U	1389	1389	3230	173.7	4515/26	3800	3800	6000	4.0	1.2	2.0	128	54
17	703	768	12	1.6	P831_0050K302_0350 EZ501U	1840	1867	3230	173.7	4515/26	3800	3800	6000	4.0	3.2	2.0	128	55
17	768	850	13	1.4	P831_0050K302_0350 EZ402U	1840	1867	3230	173.7	4515/26	3800	3800	6000	4.0	1.9	2.0	128	55
18	243	256	6.3	3.8	P831_0070K202_0230 EZ302U	763	763	1217	162.3	20769/128	4000	4000	6500	3.5	0.53	1.5	128	47
18	316	334	8.2	2.9	P831_0070K202_0230 EZ303U	916	916	1217	162.3	20769/128	4000	4000	6500	3.5	0.64	1.5	128	47
18	427	458	10	2.3	P831_0070K202_0230 EZ401U	1298	1298	2887	162.3	20769/128	4000	4000	6500	3.5	1.2	1.5	128	49
18	656	718	16	1.5	P831_0070K202_0230 EZ501U	1494	1494	2887	162.3	20769/128	4000	4000	6500	3.5	3.1	1.5	128	50
18	718	794	17	1.4	P831_0070K202_0230 EZ402U	1494	1494	2887	162.3	20769/128	4000	4000	6500	3.5	1.9	1.5	128	50
21	375	402	9.8	2.7	P831_0070K202_0200 EZ401U	1138	1138	2887	142.3	7826/55	4000	4000	6500	3.5	1.1	1.5	128	49

n_{2N} [rpm]	M_{2N} [Nm]	$M_{2,0}$ [Nm]	a_{th}	S	Type	M_{2acc} [Nm]	M_{2accHT} [Nm]	M_{2NOT} [Nm]	i	i_{exakt}	n_{1maxDB} EL1,2 [rpm]	n_{1maxDB} EL3,4,5,6 [rpm]	n_{1maxZB} [rpm]	$\Delta\varphi_2$ [arcmin]	J_1 [kgcm²]	$\Delta\varphi_{2red}$ [arcmin]	C_2 [Nm/ arcmin]	m [kg]
P831K (n_{1N} = 3000 min^{-1}, $M_{2acc,max}$ = 1840 Nm)																		
21	576	629	15	1.7	P831_0070K202_0200 EZ501U	1494	1494	2887	142.3	7826/55	4000	4000	6500	3.5	3.1	1.5	128	50
21	629	696	16	1.6	P831_0070K202_0200 EZ402U	1494	1494	2887	142.3	7826/55	4000	4000	6500	3.5	1.8	1.5	128	50
21	924	1151	24	1.1	P831_0070K202_0200 EZ404U	1494	1494	2887	142.3	7826/55	4000	4000	6500	3.5	3.2	1.5	128	52
21	991	1071	26	1.0	P831_0070K202_0200 EZ502U	1494	1494	2887	142.3	7826/55	4000	4000	6500	3.5	5.4	1.5	128	51
21	991	1111	26	1.0	P831_0070K202_0200 EZ701U	1494	1494	2887	142.3	7826/55	4000	4000	6500	3.5	8.7	1.5	128	53
22	367	394	7.6	3.0	P831_0050K302_0280 EZ401U	1115	1115	3230	139.4	17845/128	3800	3800	6000	4.0	1.3	2.0	128	54
22	564	617	12	2.0	P831_0050K302_0280 EZ501U	1840	1867	3230	139.4	17845/128	3800	3800	6000	4.0	3.3	2.0	128	55
22	617	682	13	1.8	P831_0050K302_0280 EZ402U	1840	1867	3230	139.4	17845/128	3800	3800	6000	4.0	2.0	2.0	128	55
22	905	1128	19	1.2	P831_0050K302_0280 EZ404U	1840	1867	3230	139.4	17845/128	3800	3800	6000	4.0	3.4	2.0	128	57
22	971	1049	20	1.1	P831_0050K302_0280 EZ502U	1840	1867	3230	139.4	17845/128	3800	3800	6000	4.0	5.6	2.0	128	56
22	971	1089	20	1.1	P831_0050K302_0280 EZ701U	1840	1867	3230	139.4	17845/128	3800	3800	6000	4.0	8.9	2.0	128	58
22	365	391	15	2.3	P831_0100K202_0140 EZ401U	1108	1108	2760	138.5	14405/104	3900	3900	5500	3.5	1.4	1.5	132	49
22	560	613	23	1.5	P831_0100K202_0140 EZ501U	1380	1380	2760	138.5	14405/104	3900	3900	5500	3.5	3.4	1.5	132	50
22	613	678	25	1.4	P831_0100K202_0140 EZ402U	1380	1380	2760	138.5	14405/104	3900	3900	5500	3.5	2.1	1.5	132	50
25	183	193	7.8	3.8	P831_0070K202_0175 EZ302U	575	575	917	122.3	3913/32	3900	3900	5500	3.5	0.67	1.5	128	47
25	238	252	10	2.9	P831_0070K202_0175 EZ303U	691	691	917	122.3	3913/32	3900	3900	5500	3.5	0.78	1.5	128	47
25	322	345	9.4	3.1	P831_0070K202_0175 EZ401U	978	978	2887	122.3	3913/32	3900	3900	5500	3.5	1.3	1.5	128	49
25	495	541	14	2.0	P831_0070K202_0175 EZ501U	1494	1494	2887	122.3	3913/32	3900	3900	5500	3.5	3.3	1.5	128	50
25	541	598	16	1.8	P831_0070K202_0175 EZ402U	1494	1494	2887	122.3	3913/32	3900	3900	5500	3.5	2.0	1.5	128	50
25	794	989	23	1.3	P831_0070K202_0175 EZ404U	1494	1494	2887	122.3	3913/32	3900	3900	5500	3.5	3.4	1.5	128	52
25	851	920	25	1.2	P831_0070K202_0175 EZ502U	1494	1494	2887	122.3	3913/32	3900	3900	5500	3.5	5.6	1.5	128	51
25	851	955	25	1.2	P831_0070K202_0175 EZ701U	1494	1494	2887	122.3	3913/32	3900	3900	5500	3.5	8.9	1.5	128	53
25	177	187	8.0	3.8	P831_0070K202_0170 EZ302U	555	555	885	118.0	20769/176	4000	4000	6500	3.5	0.57	1.5	128	47
25	230	243	10	2.9	P831_0070K202_0170 EZ303U	666	666	885	118.0	20769/176	4000	4000	6500	3.5	0.68	1.5	128	47
25	311	333	9.3	3.2	P831_0070K202_0170 EZ401U	944	944	2887	118.0	20769/176	4000	4000	6500	3.5	1.2	1.5	128	49
25	477	522	14	2.1	P831_0070K202_0170 EZ501U	1494	1494	2887	118.0	20769/176	4000	4000	6500	3.5	3.2	1.5	128	50
25	522	577	16	1.9	P831_0070K202_0170 EZ402U	1494	1494	2887	118.0	20769/176	4000	4000	6500	3.5	1.9	1.5	128	50
25	766	955	23	1.3	P831_0070K202_0170 EZ404U	1494	1494	2887	118.0	20769/176	4000	4000	6500	3.5	3.3	1.5	128	52
25	822	888	25	1.2	P831_0070K202_0170 EZ502U	1494	1494	2887	118.0	20769/176	4000	4000	6500	3.5	5.5	1.5	128	51
25	822	922	25	1.2	P831_0070K202_0170 EZ701U	1494	1494	2887	118.0	20769/176	4000	4000	6500	3.5	8.8	1.5	128	53
26	307	329	7.2	3.6	P831_0050K302_0230 EZ401U	931	931	3230	116.5	2795/24	3800	3800	6000	4.0	1.4	2.0	128	54
26	471	515	11	2.3	P831_0050K302_0230 EZ501U	1753	1753	3230	116.5	2795/24	3800	3800	6000	4.0	3.4	2.0	128	55
26	515	570	12	2.1	P831_0050K302_0230 EZ402U	1753	1753	3230	116.5	2795/24	3800	3800	6000	4.0	2.1	2.0	128	55
26	756	942	18	1.5	P831_0050K302_0230 EZ404U	1840	1867	3230	116.5	2795/24	3800	3800	6000	4.0	3.5	2.0	128	57
26	811	877	19	1.4	P831_0050K302_0230 EZ502U	1840	1867	3230	116.5	2795/24	3800	3800	6000	4.0	5.7	2.0	128	56
26	811	909	19	1.4	P831_0050K302_0230 EZ701U	1840	1867	3230	116.5	2795/24	3800	3800	6000	4.0	9.0	2.0	128	58
26	1063	1216	25	1.0	P831_0050K302_0230 EZ503U	1840	1867	3230	116.5	2795/24	3800	3800	6000	4.0	8.1	2.0	128	58
26	173	183	11	3.8	P831_0100K202_0115 EZ302U	543	543	866	115.5	6235/54	3500	3500	5000	3.5	0.97	1.5	132	47
26	225	238	14	2.9	P831_0100K202_0115 EZ303U	652	652	866	115.5	6235/54	3500	3500	5000	3.5	1.1	1.5	132	47
26	304	326	14	2.8	P831_0100K202_0115 EZ401U	923	923	2760	115.5	6235/54	3500	3500	5000	3.5	1.6	1.5	132	49
26	467	511	22	1.8	P831_0100K202_0115 EZ501U	1380	1380	2760	115.5	6235/54	3500	3500	5000	3.5	3.6	1.5	132	50
26	511	565	24	1.7	P831_0100K202_0115 EZ402U	1380	1380	2760	115.5	6235/54	3500	3500	5000	3.5	2.3	1.5	132	50
26	750	934	35	1.1	P831_0100K202_0115 EZ404U	1380	1380	2760	115.5	6235/54	3500	3500	5000	3.5	3.7	1.5	132	52
26	804	869	38	1.1	P831_0100K202_0115 EZ502U	1380	1380	2760	115.5	6235/54	3500	3500	5000	3.5	5.9	1.5	132	51
26	804	902	38	1.1	P831_0100K202_0115 EZ701U	1380	1380	2760	115.5	6235/54	3500	3500	5000	3.5	9.2	1.5	132	53
31	255	274	9.4	3.7	P831_0070K202_0140 EZ401U	775	775	2887	96.96	20167/208	3900	3900	5500	3.5	1.5	1.5	128	49
31	392	429	14	2.4	P831_0070K202_0140 EZ501U	1460	1460	2887	96.96	20167/208	3900	3900	5500	3.5	3.4	1.5	128	50
31	429	474	16	2.2	P831_0070K202_0140 EZ402U	1460	1460	2887	96.96	20167/208	3900	3900	5500	3.5	2.2	1.5	128	50
31	629	785	23	1.5	P831_0070K202_0140 EZ404U	1494	1494	2887	96.96	20167/208	3900	3900	5500	3.5	3.5	1.5	128	52
31	675	730	25	1.4	P831_0070K202_0140 EZ502U	1494	1494	2887	96.96	20167/208	3900	3900	5500	3.5	5.7	1.5	128	51
31	675	757	25	1.4	P831_0070K202_0140 EZ701U	1494	1494	2887	96.96	20167/208	3900	3900	5500	3.5	9.0	1.5	128	53
31	885	1013	32	1.1	P831_0070K202_0140 EZ503U	1494	1494	2887	96.96	20167/208	3900	3900	5500	3.5	8.1	1.5	128	53
33	242	259	13	3.5	P831_0100K202_0092 EZ401U	735	735	2758	91.90	11395/124	3500	3500	5000	3.5	1.9	1.5	132	49
33	372	406	21	2.3	P831_0100K202_0092 EZ501U	1380	1380	2758	91.90	11395/124	3500	3500	5000	3.5	3.9	1.5	132	50
33	406	450	23	2.1	P831_0100K202_0092 EZ402U	1380	1380	2758	91.90	11395/124	3500	3500	5000	3.5	2.6	1.5	132	50
33	597	744	33	1.4	P831_0100K202_0092 EZ404U	1380	1380	2758	91.90	11395/124	3500	3500	5000	3.5	3.9	1.5	132	52
33	640	692	36	1.3	P831_0100K202_0092 EZ502U	1380	1380	2758	91.90	11395/124	3500	3500	5000	3.5	6.2	1.5	132	51
33	640	718	36	1.3	P831_0100K202_0092 EZ701U	1380	1380	2760	91.90	11395/124	3500	3500	5000	3.5	9.5	1.5	132	53
33	839	960	47	1.0	P831_0100K202_0092 EZ503U	1380	1380	2758	91.90	11395/124	3500	3500	5000	3.5	8.5	1.5	132	53
34	133	141	9.8	3.8	P831_0070K202_0125 EZ302U	418	418	667	88.94	3913/44	3900	3900	5500	3.5	0.73	1.5	128	47
34	173	183	13	2.9	P831_0070K202_0125 EZ303U	502	502	667	88.94	3913/44	3900	3900	5500	3.5	0.84	1.5	128	47
34	234	251	9.4	3.9	P831_0070K202_0125 EZ401U	711	711	2669	88.94	3913/44	3900	3900	5500	3.5	1.4	1.5	128	49
34	360	393	15	2.6	P831_0070K202_0125 EZ501U	1339	1339	2669	88.94	3913/44	3900	3900	5500	3.5	3.3	1.5	128	50
34	393	435	16	2.3	P831_0070K202_0125 EZ402U	1339	1339	2669	88.94	3913/44	3900	3900	5500	3.5	2.1	1.5	128	50

n_{2N} [rpm]	M_{2N} [Nm]	$M_{2,0}$ [Nm]	a_{th}	S	Type	M_{2acc} [Nm]	M_{2accHT} [Nm]	M_{2NOT} [Nm]	i	i_{exakt}	n_{1maxDB} EL1,2 [rpm]	n_{1maxDB} EL3,4,5,6 [rpm]	n_{1maxZB} [rpm]	$\Delta\varphi_2$ [arcmin]	J_1 [kgcm²]	$\Delta\varphi_{2red}$ [arcmin]	C_2 [Nm/ arcmin]	m [kg]
P831K (n_{1N} = 3000 min^{-1}, $M_{2acc,max}$ = 1840 Nm)																		
34	577	720	23	1.6	P831_0070K202_0125 EZ404U	1494	1494	2669	88.94	3913/44	3900	3900	5500	3.5	3.4	1.5	128	52
34	619	669	25	1.5	P831_0070K202_0125 EZ502U	1494	1494	2669	88.94	3913/44	3900	3900	5500	3.5	5.6	1.5	128	51
34	619	695	25	1.5	P831_0070K202_0125 EZ701U	1494	1494	2887	88.94	3913/44	3900	3900	5500	3.5	8.9	1.5	128	53
34	812	929	33	1.1	P831_0070K202_0125 EZ503U	1494	1494	2669	88.94	3913/44	3900	3900	5500	3.5	8.0	1.5	128	53
35	228	244	6.7	4.8	P831_0050K302_0175 EZ401U	692	692	2594	86.47	7955/92	3500	3500	5000	4.0	1.7	2.0	128	54
35	350	382	10	3.1	P831_0050K302_0175 EZ501U	1302	1302	2594	86.47	7955/92	3500	3500	5000	4.0	3.7	2.0	128	55
35	382	423	11	2.9	P831_0050K302_0175 EZ402U	1302	1302	2594	86.47	7955/92	3500	3500	5000	4.0	2.4	2.0	128	55
35	561	700	17	2.0	P831_0050K302_0175 EZ404U	1840	1867	2594	86.47	7955/92	3500	3500	5000	4.0	3.8	2.0	128	57
35	602	651	18	1.8	P831_0050K302_0175 EZ502U	1840	1867	2594	86.47	7955/92	3500	3500	5000	4.0	6.0	2.0	128	56
35	602	675	18	1.8	P831_0050K302_0175 EZ701U	1627	1627	3230	86.47	7955/92	3500	3500	5000	4.0	9.3	2.0	128	58
35	789	903	23	1.4	P831_0050K302_0175 EZ503U	1840	1867	2594	86.47	7955/92	3500	3500	5000	4.0	8.4	2.0	128	58
35	976	1172	29	1.1	P831_0050K302_0175 EZ702U	1840	1867	3230	86.47	7955/92	3500	3500	5000	4.0	15	2.0	128	61
35	1098	1302	32	1.0	P831_0050K302_0175 EZ505U	1840	1867	3230	86.47	7955/92	3500	3500	5000	4.0	13	2.0	128	61
36	164	173	17	2.9	P831_0100K202_0084 EZ303U	474	474	630	83.97	24940/297	3500	3500	5000	3.5	1.2	1.5	132	47
36	221	237	13	3.8	P831_0100K202_0084 EZ401U	672	672	2520	83.97	24940/297	3500	3500	5000	3.5	1.7	1.5	132	49
36	340	371	20	2.5	P831_0100K202_0084 EZ501U	1264	1264	2520	83.97	24940/297	3500	3500	5000	3.5	3.7	1.5	132	50
36	371	411	22	2.3	P831_0100K202_0084 EZ402U	1264	1264	2520	83.97	24940/297	3500	3500	5000	3.5	2.4	1.5	132	50
36	545	679	33	1.6	P831_0100K202_0084 EZ404U	1380	1380	2520	83.97	24940/297	3500	3500	5000	3.5	3.8	1.5	132	52
36	585	632	35	1.5	P831_0100K202_0084 EZ502U	1380	1380	2520	83.97	24940/297	3500	3500	5000	3.5	6.0	1.5	132	51
36	585	656	35	1.5	P831_0100K202_0084 EZ701U	1380	1380	2760	83.97	24940/297	3500	3500	5000	3.5	9.3	1.5	132	53
36	766	877	46	1.1	P831_0100K202_0084 EZ503U	1380	1380	2520	83.97	24940/297	3500	3500	5000	3.5	8.4	1.5	132	53
37	121	128	11	3.8	P831_0070K202_0115 EZ302U	380	380	606	80.82	8729/108	3500	3500	5000	3.5	0.99	1.5	128	47
37	157	167	14	2.9	P831_0070K202_0115 EZ303U	456	456	606	80.82	8729/108	3500	3500	5000	3.5	1.1	1.5	128	47
37	213	228	9.5	4.2	P831_0070K202_0115 EZ401U	646	646	2425	80.82	8729/108	3500	3500	5000	3.5	1.6	1.5	128	49
37	327	357	15	2.7	P831_0070K202_0115 EZ501U	1217	1217	2425	80.82	8729/108	3500	3500	5000	3.5	3.6	1.5	128	50
37	357	395	16	2.5	P831_0070K202_0115 EZ402U	1217	1217	2425	80.82	8729/108	3500	3500	5000	3.5	2.3	1.5	128	50
37	525	654	23	1.7	P831_0070K202_0115 EZ404U	1494	1494	2425	80.82	8729/108	3500	3500	5000	3.5	3.7	1.5	128	52
37	563	608	25	1.6	P831_0070K202_0115 EZ502U	1494	1494	2425	80.82	8729/108	3500	3500	5000	3.5	5.9	1.5	128	51
37	563	631	25	1.6	P831_0070K202_0115 EZ701U	1494	1494	2887	80.82	8729/108	3500	3500	5000	3.5	9.2	1.5	128	53
37	738	844	33	1.2	P831_0070K202_0115 EZ503U	1494	1494	2425	80.82	8729/108	3500	3500	5000	3.5	8.3	1.5	128	53
43	186	199	9.6	4.6	P831_0070K202_0100 EZ401U	564	564	2116	70.51	20167/286	3900	3900	5500	3.5	1.6	1.5	128	49
43	285	312	15	3.0	P831_0070K202_0100 EZ501U	1062	1062	2116	70.51	20167/286	3900	3900	5500	3.5	3.5	1.5	128	50
43	312	345	16	2.7	P831_0070K202_0100 EZ402U	1062	1062	2116	70.51	20167/286	3900	3900	5500	3.5	2.3	1.5	128	50
43	458	571	24	1.9	P831_0070K202_0100 EZ404U	1494	1494	2116	70.51	20167/286	3900	3900	5500	3.5	3.6	1.5	128	52
43	491	531	25	1.7	P831_0070K202_0100 EZ502U	1494	1494	2116	70.51	20167/286	3900	3900	5500	3.5	5.8	1.5	128	51
43	491	551	25	1.7	P831_0070K202_0100 EZ701U	1327	1327	2887	70.51	20167/286	3900	3900	5500	3.5	9.1	1.5	128	53
43	644	736	33	1.3	P831_0070K202_0100 EZ503U	1494	1494	2116	70.51	20167/286	3900	3900	5500	3.5	8.2	1.5	128	53
43	796	955	41	1.1	P831_0070K202_0100 EZ702U	1494	1494	2887	70.51	20167/286	3900	3900	5500	3.5	14	1.5	128	56
43	282	308	9.8	3.9	P831_0050K302_0140 EZ501U	1049	1049	2091	69.68	7525/108	3500	3500	5000	4.0	4.0	2.0	128	55
43	308	341	11	3.6	P831_0050K302_0140 EZ402U	1049	1049	2091	69.68	7525/108	3500	3500	5000	4.0	2.7	2.0	128	55
43	452	564	16	2.4	P831_0050K302_0140 EZ404U	1574	1574	2091	69.68	7525/108	3500	3500	5000	4.0	4.1	2.0	128	57
43	485	524	17	2.3	P831_0050K302_0140 EZ502U	1574	1574	2091	69.68	7525/108	3500	3500	5000	4.0	6.3	2.0	128	56
43	485	544	17	2.3	P831_0050K302_0140 EZ701U	1311	1311	3230	69.68	7525/108	3500	3500	5000	4.0	9.6	2.0	128	58
43	636	728	22	1.7	P831_0050K302_0140 EZ503U	1574	1574	2091	69.68	7525/108	3500	3500	5000	4.0	8.7	2.0	128	58
43	787	944	27	1.4	P831_0050K302_0140 EZ702U	1840	1867	3230	69.68	7525/108	3500	3500	5000	4.0	15	2.0	128	61
43	885	1049	31	1.2	P831_0050K302_0140 EZ505U	1840	1867	3230	69.68	7525/108	3500	3500	5000	4.0	13	2.0	128	61
43	1082	1364	37	1.0	P831_0050K302_0140 EZ703U	1840	1867	3230	69.68	7525/108	3500	3500	5000	4.0	23	2.0	128	63
45	176	189	12	4.8	P831_0100K202_0067 EZ401U	534	534	2006	66.83	22790/341	3500	3500	5000	3.5	2.1	1.5	132	49
45	270	296	19	3.1	P831_0100K202_0067 EZ501U	1006	1006	2006	66.83	22790/341	3500	3500	5000	3.5	4.1	1.5	132	50
45	296	327	21	2.9	P831_0100K202_0067 EZ402U	1006	1006	2006	66.83	22790/341	3500	3500	5000	3.5	2.8	1.5	132	50
45	434	541	31	2.0	P831_0100K202_0067 EZ404U	1380	1380	2006	66.83	22790/341	3500	3500	5000	3.5	4.1	1.5	132	52
45	465	503	33	1.8	P831_0100K202_0067 EZ502U	1380	1380	2006	66.83	22790/341	3500	3500	5000	3.5	6.4	1.5	132	51
45	465	522	33	1.8	P831_0100K202_0067 EZ701U	1258	1258	2760	66.83	22790/341	3500	3500	5000	3.5	9.7	1.5	132	53
45	610	698	43	1.4	P831_0100K202_0067 EZ503U	1380	1380	2006	66.83	22790/341	3500	3500	5000	3.5	8.7	1.5	132	53
45	755	905	53	1.1	P831_0100K202_0067 EZ702U	1380	1380	2760	66.83	22790/341	3500	3500	5000	3.5	15	1.5	132	56
45	849	1006	60	1.0	P831_0100K202_0067 EZ505U	1380	1380	2760	66.83	22790/341	3500	3500	5000	3.5	13	1.5	132	56
47	169	182	9.7	4.9	P831_0070K202_0092 EZ401U	514	514	1931	64.33	15953/248	3500	3500	5000	3.5	1.9	1.5	128	49
47	260	284	15	3.2	P831_0070K202_0092 EZ501U	968	968	1931	64.33	15953/248	3500	3500	5000	3.5	3.9	1.5	128	50
47	284	315	16	2.9	P831_0070K202_0092 EZ402U	968	968	1931	64.33	15953/248	3500	3500	5000	3.5	2.6	1.5	128	50
47	418	521	24	2.0	P831_0070K202_0092 EZ404U	1453	1453	1931	64.33	15953/248	3500	3500	5000	3.5	4.0	1.5	128	52
47	448	484	26	1.8	P831_0070K202_0092 EZ502U	1453	1453	1931	64.33	15953/248	3500	3500	5000	3.5	6.2	1.5	128	51
47	448	502	26	1.8	P831_0070K202_0092 EZ701U	1211	1211	2887	64.33	15953/248	3500	3500	5000	3.5	9.5	1.5	128	53
47	587	672	34	1.4	P831_0070K202_0092 EZ503U	1453	1453	1931	64.33	15953/248	3500	3500	5000	3.5	8.6	1.5	128	53
47	726	872	42	1.1	P831_0070K202_0092 EZ702U	1494	1494	2887	64.33	15953/248	3500	3500	5000	3.5	15	1.5	128	56

n_{2N} [rpm]	M_{2N} [Nm]	$M_{2,0}$ [Nm]	a_{th}	S	Type	M_{2acc} [Nm]	M_{2accHT} [Nm]	M_{2NOT} [Nm]	i	i_{exakt}	n_{1maxDB} EL1,2 [rpm]	n_{1maxDB} EL3,4,5,6 [rpm]	n_{1maxZB} [rpm]	$\Delta\varphi_2$ [arcmin]	J_1 [kgcm²]	$\Delta\varphi_{2red}$ [arcmin]	C_2 [Nm/ arcmin]	m [kg]
P831K (n_{1N} = 3000 min^{-1}, $M_{2acc,max}$ = 1840 Nm)																		
47	817	968	47	1.0	P831_0070K202_0092 EZ505U	1494	1494	2887	64.33	15953/248	3500	3500	5000	3.5	13	1.5	128	56
50	243	265	19	3.5	P831_0100K202_0060 EZ501U	903	903	1800	60.00	60/1	3000	3000	4500	3.5	4.7	1.5	132	50
50	265	294	20	3.2	P831_0100K202_0060 EZ402U	903	903	1800	60.00	60/1	3000	3000	4500	3.5	3.4	1.5	132	50
50	390	486	30	2.2	P831_0100K202_0060 EZ404U	1355	1355	1800	60.00	60/1	3000	3000	4500	3.5	4.7	1.5	132	52
50	418	452	32	2.0	P831_0100K202_0060 EZ502U	1355	1355	1800	60.00	60/1	3000	3000	4500	3.5	7.0	1.5	132	51
50	418	469	32	2.0	P831_0100K202_0060 EZ701U	1129	1129	2760	60.00	60/1	3000	3000	4500	3.5	10	1.5	132	53
50	548	627	42	1.6	P831_0100K202_0060 EZ503U	1355	1355	1800	60.00	60/1	3000	3000	4500	3.5	9.3	1.5	132	53
50	677	813	52	1.3	P831_0100K202_0060 EZ702U	1380	1380	2760	60.00	60/1	3000	3000	4500	3.5	15	1.5	132	56
50	762	903	58	1.1	P831_0100K202_0060 EZ505U	1380	1380	2760	60.00	60/1	3000	3000	4500	3.5	14	1.5	132	56
51	114	121	17	2.9	P831_0070K202_0084 EZ303U	332	332	441	58.78	17458/297	3500	3500	5000	3.5	1.2	1.5	128	47
51	238	260	15	3.4	P831_0070K202_0084 EZ501U	885	885	1764	58.78	17458/297	3500	3500	5000	3.5	3.7	1.5	128	50
51	260	288	16	3.1	P831_0070K202_0084 EZ402U	885	885	1764	58.78	17458/297	3500	3500	5000	3.5	2.5	1.5	128	50
51	382	476	24	2.1	P831_0070K202_0084 EZ404U	1328	1328	1764	58.78	17458/297	3500	3500	5000	3.5	3.8	1.5	128	52
51	409	442	26	2.0	P831_0070K202_0084 EZ502U	1328	1328	1764	58.78	17458/297	3500	3500	5000	3.5	6.0	1.5	128	51
51	409	459	26	2.0	P831_0070K202_0084 EZ701U	1106	1106	2887	58.78	17458/297	3500	3500	5000	3.5	9.3	1.5	128	53
51	536	614	34	1.5	P831_0070K202_0084 EZ503U	1328	1328	1764	58.78	17458/297	3500	3500	5000	3.5	8.4	1.5	128	53
51	664	796	42	1.2	P831_0070K202_0084 EZ702U	1494	1494	2887	58.78	17458/297	3500	3500	5000	3.5	15	1.5	128	56
51	747	885	47	1.1	P831_0070K202_0084 EZ505U	1494	1494	2887	58.78	17458/297	3500	3500	5000	3.5	13	1.5	128	56
52	235	257	9.3	4.7	P831_0050K302_0115 EZ501U	874	874	1742	58.05	1161/20	3200	3200	4500	4.0	4.4	2.0	128	55
52	257	284	10	4.3	P831_0050K302_0115 EZ402U	874	874	1742	58.05	1161/20	3200	3200	4500	4.0	3.1	2.0	128	55
52	377	470	15	2.9	P831_0050K302_0115 EZ404U	1311	1311	1742	58.05	1161/20	3200	3200	4500	4.0	4.4	2.0	128	57
52	404	437	16	2.7	P831_0050K302_0115 EZ502U	1311	1311	1742	58.05	1161/20	3200	3200	4500	4.0	6.7	2.0	128	56
52	404	453	16	2.7	P831_0050K302_0115 EZ701U	1092	1092	3230	58.05	1161/20	3200	3200	4500	4.0	10	2.0	128	58
52	530	606	21	2.1	P831_0050K302_0115 EZ503U	1311	1311	1742	58.05	1161/20	3200	3200	4500	4.0	9.0	2.0	128	58
52	655	787	26	1.7	P831_0050K302_0115 EZ702U	1840	1867	3230	58.05	1161/20	3200	3200	4500	4.0	15	2.0	128	61
52	737	874	29	1.5	P831_0050K302_0115 EZ505U	1840	1867	3230	58.05	1161/20	3200	3200	4500	4.0	14	2.0	128	61
52	901	1136	36	1.2	P831_0050K302_0115 EZ703U	1840	1867	3230	58.05	1161/20	3200	3200	4500	4.0	23	2.0	128	63
58	360	404	31	2.4	P831_0100K202_0052 EZ701U	974	974	2760	51.77	21070/407	3000	3000	4500	3.5	10	1.5	132	53
58	585	701	50	1.5	P831_0100K202_0052 EZ702U	1380	1380	2760	51.77	21070/407	3000	3000	4500	3.5	15	1.5	132	56
58	658	779	56	1.3	P831_0100K202_0052 EZ505U	1380	1380	2760	51.77	21070/407	3000	3000	4500	3.5	14	1.5	132	56
58	804	1013	69	1.1	P831_0100K202_0052 EZ703U	1380	1380	2760	51.77	21070/407	3000	3000	4500	3.5	23	1.5	132	58
60	347	389	26	2.2	P831_0070K202_0071 EZ701U	938	938	2887	49.83	14749/296	3000	3000	4500	3.5	10	1.5	128	53
60	563	675	42	1.4	P831_0070K202_0071 EZ702U	1436	1436	2887	49.83	14749/296	3000	3000	4500	3.5	15	1.5	128	56
60	633	750	48	1.2	P831_0070K202_0071 EZ505U	1436	1436	2887	49.83	14749/296	3000	3000	4500	3.5	14	1.5	128	56
64	189	207	15	3.9	P831_0070K202_0067 EZ501U	704	704	1404	46.78	15953/341	3500	3500	5000	3.5	4.1	1.5	128	50
64	207	229	17	3.6	P831_0070K202_0067 EZ402U	704	704	1404	46.78	15953/341	3500	3500	5000	3.5	2.8	1.5	128	50
64	304	379	25	2.4	P831_0070K202_0067 EZ404U	1057	1057	1404	46.78	15953/341	3500	3500	5000	3.5	4.2	1.5	128	52
64	326	352	26	2.3	P831_0070K202_0067 EZ502U	1057	1057	1404	46.78	15953/341	3500	3500	5000	3.5	6.4	1.5	128	51
64	326	365	26	2.3	P831_0070K202_0067 EZ701U	880	880	2887	46.78	15953/341	3500	3500	5000	3.5	9.7	1.5	128	53
64	427	489	35	1.7	P831_0070K202_0067 EZ503U	1057	1057	1404	46.78	15953/341	3500	3500	5000	3.5	8.8	1.5	128	53
64	528	634	43	1.4	P831_0070K202_0067 EZ702U	1406	1406	2887	46.78	15953/341	3500	3500	5000	3.5	15	1.5	128	56
64	594	704	48	1.3	P831_0070K202_0067 EZ505U	1406	1406	2887	46.78	15953/341	3500	3500	5000	3.5	13	1.5	128	56
64	726	916	59	1.0	P831_0070K202_0067 EZ703U	1406	1406	2887	46.78	15953/341	3500	3500	5000	3.5	23	1.5	128	58
65	323	362	16	3.2	P831_0050K302_0093 EZ701U	872	872	3230	46.34	5375/116	3200	3200	4500	4.0	11	2.0	128	58
65	523	628	26	2.0	P831_0050K302_0093 EZ702U	1787	1787	3230	46.34	5375/116	3200	3200	4500	4.0	16	2.0	128	61
65	589	698	29	1.8	P831_0050K302_0093 EZ505U	1840	1867	3230	46.34	5375/116	3200	3200	4500	4.0	14	2.0	128	61
65	719	907	36	1.4	P831_0050K302_0093 EZ703U	1840	1867	3230	46.34	5375/116	3200	3200	4500	4.0	24	2.0	128	63
71	170	186	15	4.2	P831_0070K202_0060 EZ501U	632	632	1260	42.00	42/1	3000	3000	4500	3.5	4.7	1.5	128	50
71	186	205	17	3.9	P831_0070K202_0060 EZ402U	632	632	1260	42.00	42/1	3000	3000	4500	3.5	3.5	1.5	128	50
71	273	340	25	2.6	P831_0070K202_0060 EZ404U	948	948	1260	42.00	42/1	3000	3000	4500	3.5	4.8	1.5	128	52
71	292	316	27	2.5	P831_0070K202_0060 EZ502U	948	948	1260	42.00	42/1	3000	3000	4500	3.5	7.0	1.5	128	51
71	292	328	27	2.5	P831_0070K202_0060 EZ701U	790	790	2887	42.00	42/1	3000	3000	4500	3.5	10	1.5	128	53
71	383	439	35	1.9	P831_0070K202_0060 EZ503U	948	948	1260	42.00	42/1	3000	3000	4500	3.5	9.4	1.5	128	53
71	474	569	43	1.5	P831_0070K202_0060 EZ702U	1356	1356	2887	42.00	42/1	3000	3000	4500	3.5	16	1.5	128	56
71	533	632	48	1.3	P831_0070K202_0060 EZ505U	1356	1356	2887	42.00	42/1	3000	3000	4500	3.5	14	1.5	128	56
71	652	822	59	1.1	P831_0070K202_0060 EZ703U	1356	1356	2887	42.00	42/1	3000	3000	4500	3.5	23	1.5	128	58
75	279	312	29	3.1	P831_0100K202_0040 EZ701U	753	753	2760	40.00	40/1	3000	3000	4500	3.5	11	1.5	132	53
75	452	542	47	1.9	P831_0100K202_0040 EZ702U	1380	1380	2760	40.00	40/1	3000	3000	4500	3.5	16	1.5	132	56
75	508	602	53	1.7	P831_0100K202_0040 EZ505U	1380	1380	2760	40.00	40/1	3000	3000	4500	3.5	15	1.5	132	56
75	621	783	65	1.4	P831_0100K202_0040 EZ703U	1380	1380	2760	40.00	40/1	3000	3000	4500	3.5	24	1.5	132	58
81	257	289	16	3.7	P831_0050K302_0074 EZ701U	695	695	2772	36.96	2365/64	2700	2700	4000	4.0	11	2.0	128	58
81	417	501	27	2.3	P831_0050K302_0074 EZ702U	1426	1426	2772	36.96	2365/64	2700	2700	4000	4.0	17	2.0	128	61
81	469	556	30	2.1	P831_0050K302_0074 EZ505U	1819	1819	2772	36.96	2365/64	2700	2700	4000	4.0	15	2.0	128	61
81	574	723	37	1.7	P831_0050K302_0074 EZ703U	1819	1819	2772	36.96	2365/64	2700	2700	4000	4.0	24	2.0	128	63

n_{2N} [rpm]	M_{2N} [Nm]	$M_{2,0}$ [Nm]	a_{th}	S	Type	M_{2acc} [Nm]	M_{2accHT} [Nm]	M_{2NOT} [Nm]	i	i_{exakt}	n_{1maxDB} EL1,2 [rpm]	n_{1maxDB} EL3,4,5,6 [rpm]	n_{1maxZB} [rpm]	$\Delta\varphi_2$ [arcmin]	J_1 [kgcm²]	$\Delta\varphi_{2red}$ [arcmin]	C_2 [Nm/ arcmin]	m [kg]
P831K (n_{1N} = 3000 min^{-1}, $M_{2acc,max}$ = 1840 Nm)																		
83	252	283	27	2.7	P831_0070K202_0052 EZ701U	682	682	2718	36.24	14749/407	3000	3000	4500	3.5	10	1.5	128	53
83	409	491	44	1.7	P831_0070K202_0052 EZ702U	1291	1291	2718	36.24	14749/407	3000	3000	4500	3.5	16	1.5	128	56
83	460	546	49	1.5	P831_0070K202_0052 EZ505U	1291	1291	2718	36.24	14749/407	3000	3000	4500	3.5	14	1.5	128	56
83	563	709	60	1.2	P831_0070K202_0052 EZ703U	1291	1291	2718	36.24	14749/407	3000	3000	4500	3.5	23	1.5	128	58
98	135	149	17	4.8	P831_0070K202_0044 EZ402U	460	460	916	30.55	336/11	3000	3000	4500	3.5	4.0	1.5	128	50
98	198	247	25	3.3	P831_0070K202_0044 EZ404U	690	690	916	30.55	336/11	3000	3000	4500	3.5	5.4	1.5	128	52
98	213	230	27	3.0	P831_0070K202_0044 EZ502U	690	690	916	30.55	336/11	3000	3000	4500	3.5	7.6	1.5	128	51
98	213	239	27	3.0	P831_0070K202_0044 EZ701U	575	575	2291	30.55	336/11	3000	3000	4500	3.5	11	1.5	128	53
98	279	319	36	2.3	P831_0070K202_0044 EZ503U	690	690	916	30.55	336/11	3000	3000	4500	3.5	10	1.5	128	53
98	345	414	44	1.9	P831_0070K202_0044 EZ702U	1178	1178	2291	30.55	336/11	3000	3000	4500	3.5	16	1.5	128	56
98	388	460	50	1.7	P831_0070K202_0044 EZ505U	1220	1220	2291	30.55	336/11	3000	3000	4500	3.5	15	1.5	128	56
98	474	598	61	1.4	P831_0070K202_0044 EZ703U	1220	1220	2291	30.55	336/11	3000	3000	4500	3.5	24	1.5	128	58
100	209	234	17	4.3	P831_0050K302_0060 EZ701U	565	565	2250	30.00	30/1	2700	2700	4000	4.0	12	2.0	128	58
100	339	406	27	2.7	P831_0050K302_0060 EZ702U	1157	1157	2250	30.00	30/1	2700	2700	4000	4.0	18	2.0	128	61
100	381	452	30	2.4	P831_0050K302_0060 EZ505U	1694	1694	2250	30.00	30/1	2700	2700	4000	4.0	16	2.0	128	61
100	466	587	37	1.9	P831_0050K302_0060 EZ703U	1694	1694	2250	30.00	30/1	2700	2700	4000	4.0	25	2.0	128	63
100	601	852	48	1.5	P831_0050K302_0060 EZ705U	1697	1697	3230	30.00	30/1	2700	2700	4000	4.0	38	2.0	128	68
107	195	219	27	3.2	P831_0070K202_0040 EZ701U	527	527	2100	28.00	28/1	3000	3000	4500	3.5	11	1.5	128	53
107	316	379	45	2.0	P831_0070K202_0040 EZ702U	1080	1080	2100	28.00	28/1	3000	3000	4500	3.5	16	1.5	128	56
107	356	422	50	1.8	P831_0070K202_0040 EZ505U	1185	1185	2100	28.00	28/1	3000	3000	4500	3.5	15	1.5	128	56
107	435	548	61	1.4	P831_0070K202_0040 EZ703U	1185	1185	2100	28.00	28/1	3000	3000	4500	3.5	24	1.5	128	58
112	187	210	17	4.6	P831_0050K302_0054 EZ701U	506	506	2016	26.88	215/8	2700	2700	4000	4.0	12	2.0	128	58
112	303	364	27	2.9	P831_0050K302_0054 EZ702U	1037	1037	2016	26.88	215/8	2700	2700	4000	4.0	17	2.0	128	61
112	341	405	31	2.5	P831_0050K302_0054 EZ505U	1518	1518	2016	26.88	215/8	2700	2700	4000	4.0	16	2.0	128	61
112	417	526	38	2.1	P831_0050K302_0054 EZ703U	1518	1518	2016	26.88	215/8	2700	2700	4000	4.0	25	2.0	128	63
150	226	271	28	3.5	P831_0050K302_0040 EZ702U	772	772	1500	20.00	20/1	2700	2700	4000	4.0	19	2.0	128	61
150	254	301	31	3.1	P831_0050K302_0040 EZ505U	1129	1129	1500	20.00	20/1	2700	2700	4000	4.0	18	2.0	128	61
150	310	391	38	2.5	P831_0050K302_0040 EZ703U	1129	1129	1500	20.00	20/1	2700	2700	4000	4.0	27	2.0	128	63
150	401	568	50	2.0	P831_0050K302_0040 EZ705U	1482	1482	3230	20.00	20/1	2700	2700	4000	4.0	40	2.0	128	68
188	181	217	28	3.5	P831_0040K302_0040 EZ702U	617	617	1200	16.00	16/1	2700	2700	4000	4.0	20	2.0	109	61
188	203	241	31	3.1	P831_0040K302_0040 EZ505U	903	903	1200	16.00	16/1	2700	2700	4000	4.0	18	2.0	109	61
188	248	313	38	2.5	P831_0040K302_0040 EZ703U	903	903	1200	16.00	16/1	2700	2700	4000	4.0	28	2.0	109	63
188	321	455	50	2.0	P831_0040K302_0040 EZ705U	1186	1186	2887	16.00	16/1	2700	2700	4000	4.0	40	2.0	109	68
250	135	163	28	3.5	P831_0030K302_0040 EZ702U	463	463	900	12.00	12/1	2700	2700	4000	4.5	21	2.5	83	61
250	152	181	31	3.1	P831_0030K302_0040 EZ505U	677	677	900	12.00	12/1	2700	2700	4000	4.5	20	2.5	83	61
250	186	235	38	2.5	P831_0030K302_0040 EZ703U	677	677	900	12.00	12/1	2700	2700	4000	4.5	29	2.5	83	63
250	240	341	50	2.0	P831_0030K302_0040 EZ705U	889	889	2165	12.00	12/1	2700	2700	4000	4.5	42	2.5	83	68
P831K (n_{1N} = 4500 min^{-1}, $M_{2acc,max}$ = 1840 Nm)																		
39	1041	1677	25	1.1	P831_0050K302_0230 EZ505U	1840	1867	3230	116.5	2795/24	3800	3800	6000	4.0	13	2.0	128	61
49	821	1323	46	1.0	P831_0100K202_0092 EZ505U	1380	1380	2760	91.90	11395/124	3500	3500	5000	3.5	13	1.5	132	56
51	795	1280	37	1.0	P831_0070K202_0125 EZ505U	1494	1494	2887	88.94	3913/44	3900	3900	5500	3.5	13	1.5	128	56
52	773	1245	23	1.4	P831_0050K302_0175 EZ505U	1840	1867	3230	86.47	7955/92	3500	3500	5000	4.0	13	2.0	128	61
52	984	1627	29	1.1	P831_0050K302_0175 EZ703U	1840	1867	3230	86.47	7955/92	3500	3500	5000	4.0	22	2.0	128	63
54	751	1209	45	1.1	P831_0100K202_0084 EZ505U	1380	1380	2760	83.97	24940/297	3500	3500	5000	3.5	13	1.5	132	56
56	722	1163	37	1.1	P831_0070K202_0115 EZ505U	1494	1494	2887	80.82	8729/108	3500	3500	5000	3.5	13	1.5	128	56
64	630	1015	37	1.2	P831_0070K202_0100 EZ505U	1494	1494	2887	70.51	20167/286	3900	3900	5500	3.5	13	1.5	128	56
65	623	1003	23	1.7	P831_0050K302_0140 EZ505U	1840	1867	3230	69.68	7525/108	3500	3500	5000	4.0	13	2.0	128	61
65	793	1311	29	1.3	P831_0050K302_0140 EZ703U	1840	1867	3230	69.68	7525/108	3500	3500	5000	4.0	23	2.0	128	63
67	597	962	42	1.4	P831_0100K202_0067 EZ505U	1380	1380	2760	66.83	22790/341	3500	3500	5000	3.5	13	1.5	132	56
67	761	1258	54	1.1	P831_0100K202_0067 EZ703U	1380	1380	2760	66.83	22790/341	3500	3500	5000	3.5	23	1.5	132	58
70	575	926	38	1.3	P831_0070K202_0092 EZ505U	1494	1494	2887	64.33	15953/248	3500	3500	5000	3.5	13	1.5	128	56
75	536	864	41	1.6	P831_0100K202_0060 EZ505U	1380	1380	2760	60.00	60/1	3000	3000	4500	3.5	14	1.5	132	56
75	683	1129	52	1.2	P831_0100K202_0060 EZ703U	1380	1380	2760	60.00	60/1	3000	3000	4500	3.5	23	1.5	132	58
77	525	846	38	1.3	P831_0070K202_0084 EZ505U	1494	1494	2887	58.78	17458/297	3500	3500	5000	3.5	13	1.5	128	56
77	669	1106	48	1.0	P831_0070K202_0084 EZ703U	1494	1494	2887	58.78	17458/297	3500	3500	5000	3.5	22	1.5	128	58
78	519	836	23	1.9	P831_0050K302_0115 EZ505U	1840	1867	3230	58.05	1161/20	3200	3200	4500	4.0	14	2.0	128	61
78	661	1092	30	1.5	P831_0050K302_0115 EZ703U	1840	1867	3230	58.05	1161/20	3200	3200	4500	4.0	23	2.0	128	63
87	463	745	40	1.8	P831_0100K202_0052 EZ505U	1380	1380	2760	51.77	21070/407	3000	3000	4500	3.5	14	1.5	132	56
87	589	974	51	1.4	P831_0100K202_0052 EZ703U	1380	1380	2760	51.77	21070/407	3000	3000	4500	3.5	23	1.5	132	58
90	445	717	39	1.5	P831_0070K202_0071 EZ505U	1436	1436	2887	49.83	14749/296	3000	3000	4500	3.5	14	1.5	128	56
90	567	938	49	1.2	P831_0070K202_0071 EZ703U	1436	1436	2887	49.83	14749/296	3000	3000	4500	3.5	23	1.5	128	58
96	418	673	39	1.6	P831_0070K202_0067 EZ505U	1406	1406	2887	46.78	15953/341	3500	3500	5000	3.5	13	1.5	128	56
96	533	880	49	1.2	P831_0070K202_0067 EZ703U	1406	1406	2887	46.78	15953/341	3500	3500	5000	3.5	23	1.5	128	58
97	414	667	24	2.2	P831_0050K302_0093 EZ505U	1840	1867	3230	46.34	5375/116	3200	3200	4500	4.0	14	2.0	128	61

n_{2N} [rpm]	M_{2N} [Nm]	$M_{2,0}$ [Nm]	a_{th}	S	Type	M_{2acc} [Nm]	M_{2accHT} [Nm]	M_{2NOT} [Nm]	i	i_{exakt}	n_{1maxDB} EL1,2 [rpm]	n_{1maxDB} EL3,4,5,6 [rpm]	n_{1maxZB} [rpm]	$\Delta\varphi_2$ [arcmin]	J_1 [kgcm²]	$\Delta\varphi_{2red}$ [arcmin]	C_2 [Nm/ arcmin]	m [kg]
P831K (n_{1N} = 4500 min^{-1}, $M_{2acc,max}$ = 1840 Nm)																		
97	528	872	30	1.7	P831_0050K302_0093 EZ703U	1840	1867	3230	46.34	5375/116	3200	3200	4500	4.0	24	2.0	128	63
107	375	605	39	1.7	P831_0070K202_0060 EZ505U	1356	1356	2887	42.00	42/1	3000	3000	4500	3.5	14	1.5	128	56
107	478	790	50	1.3	P831_0070K202_0060 EZ703U	1356	1356	2887	42.00	42/1	3000	3000	4500	3.5	23	1.5	128	58
113	358	576	40	2.2	P831_0100K202_0040 EZ505U	1380	1380	2760	40.00	40/1	3000	3000	4500	3.5	15	1.5	132	56
113	455	753	51	1.7	P831_0100K202_0040 EZ703U	1380	1380	2760	40.00	40/1	3000	3000	4500	3.5	24	1.5	132	58
124	324	522	40	1.8	P831_0070K202_0052 EZ505U	1291	1291	2718	36.24	14749/407	3000	3000	4500	3.5	14	1.5	128	56
124	413	682	50	1.4	P831_0070K202_0052 EZ703U	1291	1291	2718	36.24	14749/407	3000	3000	4500	3.5	23	1.5	128	58
147	273	440	40	2.1	P831_0070K202_0044 EZ505U	1220	1220	2291	30.55	336/11	3000	3000	4500	3.5	15	1.5	128	56
147	348	575	51	1.6	P831_0070K202_0044 EZ703U	1220	1220	2291	30.55	336/11	3000	3000	4500	3.5	24	1.5	128	58
161	250	403	40	2.2	P831_0070K202_0040 EZ505U	1185	1185	2100	28.00	28/1	3000	3000	4500	3.5	15	1.5	128	56
161	319	527	51	1.7	P831_0070K202_0040 EZ703U	1185	1185	2100	28.00	28/1	3000	3000	4500	3.5	24	1.5	128	58
P831K (n_{1N} = 6000 min^{-1}, $M_{2acc,max}$ = 1840 Nm)																		
11	784	878	11	1.1	P831_0100K202_0560 EZ302U	1380	1380	2760	555.4	6665/12	4000	4000	6500	3.5	0.34	1.5	132	47
12	686	768	7.9	1.3	P831_0070K202_0690 EZ302U	1078	1078	1828	486.0	46655/96	4000	4000	6500	3.5	0.33	1.5	128	47
12	896	1029	10	1.0	P831_0070K202_0690 EZ303U	1078	1078	1828	486.0	46655/96	4000	4000	6500	3.5	0.44	1.5	128	47
13	652	731	11	1.3	P831_0100K202_0460 EZ302U	1380	1380	2659	462.3	1849/4	4000	4000	6500	3.5	0.36	1.5	132	47
15	549	615	6.7	1.8	P831_0070K202_0560 EZ302U	1294	1294	1949	388.8	9331/24	4000	4000	6500	3.5	0.35	1.5	128	47
15	717	823	8.8	1.4	P831_0070K202_0560 EZ303U	1294	1294	1949	388.8	9331/24	4000	4000	6500	3.5	0.46	1.5	128	47
15	841	1024	10	1.2	P831_0070K202_0560 EZ401U	1294	1294	1949	388.8	9331/24	4000	4000	6500	3.5	0.99	1.5	128	49
17	499	559	10	1.3	P831_0070K202_0500 EZ302U	784	784	1329	353.4	46655/132	4000	4000	6500	3.5	0.33	1.5	128	47
17	652	748	13	1.0	P831_0070K202_0500 EZ303U	784	784	1329	353.4	46655/132	4000	4000	6500	3.5	0.44	1.5	128	47
17	488	546	10	1.7	P831_0100K202_0350 EZ302U	1380	1380	2209	345.5	9675/28	4000	4000	6500	3.5	0.41	1.5	132	47
17	637	732	13	1.3	P831_0100K202_0350 EZ303U	1380	1380	2209	345.5	9675/28	4000	4000	6500	3.5	0.52	1.5	132	47
17	748	910	15	1.1	P831_0100K202_0350 EZ401U	1380	1380	2760	345.5	9675/28	4000	4000	6500	3.5	1.1	1.5	132	49
19	457	511	6.4	2.2	P831_0070K202_0460 EZ302U	1401	1401	1861	323.6	12943/40	4000	4000	6500	3.5	0.37	1.5	128	47
19	597	685	8.4	1.7	P831_0070K202_0460 EZ303U	1401	1401	1861	323.6	12943/40	4000	4000	6500	3.5	0.48	1.5	128	47
19	700	852	9.9	1.4	P831_0070K202_0460 EZ401U	1494	1494	2887	323.6	12943/40	4000	4000	6500	3.5	1.0	1.5	128	49
21	399	447	7.9	2.0	P831_0070K202_0400 EZ302U	941	941	1418	282.8	9331/33	4000	4000	6500	3.5	0.35	1.5	128	47
21	521	599	10	1.5	P831_0070K202_0400 EZ303U	941	941	1418	282.8	9331/33	4000	4000	6500	3.5	0.46	1.5	128	47
21	612	745	12	1.3	P831_0070K202_0400 EZ401U	941	941	1418	282.8	9331/33	4000	4000	6500	3.5	0.99	1.5	128	49
21	605	736	15	1.4	P831_0100K202_0280 EZ401U	1380	1380	2760	279.5	559/2	4000	4000	6500	3.5	1.1	1.5	132	49
22	603	734	7.4	1.8	P831_0050K302_0560 EZ401U	1541	1541	2729	278.5	12255/44	3800	3800	6000	4.0	1.0	2.0	128	54
22	891	1153	11	1.2	P831_0050K302_0560 EZ501U	1541	1541	2729	278.5	12255/44	3800	3800	6000	4.0	3.0	2.0	128	55
22	917	1284	11	1.2	P831_0050K302_0560 EZ402U	1541	1541	2729	278.5	12255/44	3800	3800	6000	4.0	1.7	2.0	128	55
25	341	382	6.0	2.9	P831_0070K202_0350 EZ302U	1138	1138	1546	241.9	1935/8	4000	4000	6500	3.5	0.42	1.5	128	47
25	446	512	7.8	2.2	P831_0070K202_0350 EZ303U	1164	1164	1546	241.9	1935/8	4000	4000	6500	3.5	0.53	1.5	128	47
25	523	637	9.2	1.9	P831_0070K202_0350 EZ401U	1494	1494	2887	241.9	1935/8	4000	4000	6500	3.5	1.1	1.5	128	49
25	774	1001	14	1.3	P831_0070K202_0350 EZ501U	1494	1494	2887	241.9	1935/8	4000	4000	6500	3.5	3.0	1.5	128	50
25	797	1115	14	1.3	P831_0070K202_0350 EZ402U	1494	1494	2887	241.9	1935/8	4000	4000	6500	3.5	1.8	1.5	128	50
25	332	372	5.9	3.0	P831_0070K202_0340 EZ302U	1019	1019	1353	235.3	12943/55	4000	4000	6500	3.5	0.38	1.5	128	47
25	434	498	7.8	2.3	P831_0070K202_0340 EZ303U	1019	1019	1353	235.3	12943/55	4000	4000	6500	3.5	0.49	1.5	128	47
25	509	620	9.1	2.0	P831_0070K202_0340 EZ401U	1255	1255	2223	235.3	12943/55	4000	4000	6500	3.5	1.0	1.5	128	49
25	753	974	13	1.3	P831_0070K202_0340 EZ501U	1255	1255	2223	235.3	12943/55	4000	4000	6500	3.5	3.0	1.5	128	50
25	775	1085	14	1.3	P831_0070K202_0340 EZ402U	1255	1255	2223	235.3	12943/55	4000	4000	6500	3.5	1.7	1.5	128	50
26	327	366	9.1	2.6	P831_0100K202_0230 EZ302U	1091	1091	1739	231.8	14835/64	4000	4000	6500	3.5	0.53	1.5	132	47
26	427	491	12	2.0	P831_0100K202_0230 EZ303U	1309	1309	1739	231.8	14835/64	4000	4000	6500	3.5	0.64	1.5	132	47
26	502	611	14	1.7	P831_0100K202_0230 EZ401U	1380	1380	2760	231.8	14835/64	4000	4000	6500	3.5	1.2	1.5	132	49
26	742	960	21	1.1	P831_0100K202_0230 EZ501U	1380	1380	2760	231.8	14835/64	4000	4000	6500	3.5	3.1	1.5	132	50
26	763	1069	21	1.1	P831_0100K202_0230 EZ402U	1380	1380	2760	231.8	14835/64	4000	4000	6500	3.5	1.9	1.5	132	50
26	500	609	7.1	2.2	P831_0050K302_0460 EZ401U	1840	1848	3230	231.1	1849/8	3800	3800	6000	4.0	1.1	2.0	128	54
26	739	957	10	1.5	P831_0050K302_0460 EZ501U	1840	1867	3230	231.1	1849/8	3800	3800	6000	4.0	3.1	2.0	128	55
26	761	1066	11	1.4	P831_0050K302_0460 EZ402U	1840	1867	3230	231.1	1849/8	3800	3800	6000	4.0	1.8	2.0	128	55
31	423	515	9.2	2.2	P831_0070K202_0280 EZ401U	1494	1494	2887	195.7	3913/20	4000	4000	6500	3.5	1.1	1.5	128	49
31	626	810	14	1.5	P831_0070K202_0280 EZ501U	1494	1494	2887	195.7	3913/20	4000	4000	6500	3.5	3.1	1.5	128	50
31	644	902	14	1.5	P831_0070K202_0280 EZ402U	1494	1494	2887	195.7	3913/20	4000	4000	6500	3.5	1.8	1.5	128	50
34	248	278	6.5	3.4	P831_0070K202_0250 EZ302U	828	828	1125	175.9	1935/11	4000	4000	6500	3.5	0.43	1.5	128	47
34	324	372	8.5	2.6	P831_0070K202_0250 EZ303U	846	846	1125	175.9	1935/11	4000	4000	6500	3.5	0.54	1.5	128	47
34	381	463	9.2	2.4	P831_0070K202_0250 EZ401U	1407	1407	2887	175.9	1935/11	4000	4000	6500	3.5	1.1	1.5	128	49
34	563	728	14	1.6	P831_0070K202_0250 EZ501U	1494	1494	2887	175.9	1935/11	4000	4000	6500	3.5	3.0	1.5	128	50
34	579	811	14	1.6	P831_0070K202_0250 EZ402U	1494	1494	2887	175.9	1935/11	4000	4000	6500	3.5	1.8	1.5	128	50
34	861	1291	21	1.1	P831_0070K202_0250 EZ502U	1494	1494	2887	175.9	1935/11	4000	4000	6500	3.5	5.3	1.5	128	51
34	861	1308	21	1.1	P831_0070K202_0250 EZ701U	1494	1494	2887	175.9	1935/11	4000	4000	6500	3.5	8.6	1.5	128	53
35	376	457	6.6	2.9	P831_0050K302_0350 EZ401U	1389	1389	3230	173.7	4515/26	3800	3800	6000	4.0	1.2	2.0	128	54
35	556	719	9.7	2.0	P831_0050K302_0350 EZ501U	1840	1867	3230	173.7	4515/26	3800	3800	6000	4.0	3.2	2.0	128	55

n_{2N} [rpm]	M_{2N} [Nm]	$M_{2,0}$ [Nm]	a_{th}	S	Type	M_{2acc} [Nm]	M_{2accHT} [Nm]	M_{2NOT} [Nm]	i	i_{exakt}	n_{1maxDB} EL1,2 [rpm]	n_{1maxDB} EL3,4,5,6 [rpm]	n_{1maxZB} [rpm]	$\Delta\varphi_2$ [arcmin]	J_1 [kgcm²]	$\Delta\varphi_{2red}$ [arcmin]	C_2 [Nm/arcmin]	m [kg]
P831K (n_{1N} = 6000 min^{-1}, $M_{2acc,max}$ = 1840 Nm)																		
35	572	801	10	1.9	P831_0050K302_0350 EZ402U	1840	1867	3230	173.7	4515/26	3800	3800	6000	4.0	1.9	2.0	128	55
35	850	1274	15	1.3	P831_0050K302_0350 EZ502U	1840	1867	3230	173.7	4515/26	3800	3800	6000	4.0	5.5	2.0	128	56
35	850	1291	15	1.3	P831_0050K302_0350 EZ701U	1840	1867	3230	173.7	4515/26	3800	3800	6000	4.0	8.8	2.0	128	58
35	948	1372	17	1.2	P831_0050K302_0350 EZ404U	1840	1867	3230	173.7	4515/26	3800	3800	6000	4.0	3.2	2.0	128	57
35	1013	1732	18	1.1	P831_0050K302_0350 EZ503U	1840	1867	3230	173.7	4515/26	3800	3800	6000	4.0	7.8	2.0	128	58
37	229	256	6.1	3.9	P831_0070K202_0230 EZ302U	763	763	1217	162.3	20769/128	4000	4000	6500	3.5	0.53	1.5	128	47
37	299	344	7.9	3.0	P831_0070K202_0230 EZ303U	916	916	1217	162.3	20769/128	4000	4000	6500	3.5	0.64	1.5	128	47
37	351	427	9.3	2.5	P831_0070K202_0230 EZ401U	1298	1298	2887	162.3	20769/128	4000	4000	6500	3.5	1.2	1.5	128	49
37	519	672	14	1.7	P831_0070K202_0230 EZ501U	1494	1494	2887	162.3	20769/128	4000	4000	6500	3.5	3.1	1.5	128	50
37	534	748	14	1.7	P831_0070K202_0230 EZ402U	1494	1494	2887	162.3	20769/128	4000	4000	6500	3.5	1.9	1.5	128	50
37	794	1191	21	1.1	P831_0070K202_0230 EZ502U	1494	1494	2887	162.3	20769/128	4000	4000	6500	3.5	5.4	1.5	128	51
37	794	1206	21	1.1	P831_0070K202_0230 EZ701U	1494	1494	2887	162.3	20769/128	4000	4000	6500	3.5	8.7	1.5	128	53
37	885	1282	23	1.0	P831_0070K202_0230 EZ404U	1494	1494	2887	162.3	20769/128	4000	4000	6500	3.5	3.2	1.5	128	52
42	308	375	9.4	2.8	P831_0070K202_0200 EZ401U	1138	1138	2887	142.3	7826/55	4000	4000	6500	3.5	1.1	1.5	128	49
42	455	589	14	1.9	P831_0070K202_0200 EZ501U	1494	1494	2887	142.3	7826/55	4000	4000	6500	3.5	3.1	1.5	128	50
42	469	656	14	1.8	P831_0070K202_0200 EZ402U	1494	1494	2887	142.3	7826/55	4000	4000	6500	3.5	1.8	1.5	128	50
42	696	1044	21	1.2	P831_0070K202_0200 EZ502U	1494	1494	2887	142.3	7826/55	4000	4000	6500	3.5	5.4	1.5	128	51
42	696	1058	21	1.2	P831_0070K202_0200 EZ701U	1494	1494	2887	142.3	7826/55	4000	4000	6500	3.5	8.7	1.5	128	53
42	777	1125	24	1.1	P831_0070K202_0200 EZ404U	1494	1494	2887	142.3	7826/55	4000	4000	6500	3.5	3.2	1.5	128	52
42	830	1419	25	1.0	P831_0070K202_0200 EZ503U	1494	1494	2887	142.3	7826/55	4000	4000	6500	3.5	7.8	1.5	128	53
43	302	367	6.2	3.6	P831_0050K302_0280 EZ401U	1115	1115	3230	139.4	17845/128	3800	3800	6000	4.0	1.3	2.0	128	54
43	446	577	9.2	2.5	P831_0050K302_0280 EZ501U	1840	1867	3230	139.4	17845/128	3800	3800	6000	4.0	3.3	2.0	128	55
43	459	643	9.5	2.4	P831_0050K302_0280 EZ402U	1840	1867	3230	139.4	17845/128	3800	3800	6000	4.0	2.0	2.0	128	55
43	682	1023	14	1.6	P831_0050K302_0280 EZ502U	1840	1867	3230	139.4	17845/128	3800	3800	6000	4.0	5.6	2.0	128	56
43	682	1036	14	1.6	P831_0050K302_0280 EZ701U	1840	1867	3230	139.4	17845/128	3800	3800	6000	4.0	8.9	2.0	128	58
43	761	1102	16	1.4	P831_0050K302_0280 EZ404U	1840	1867	3230	139.4	17845/128	3800	3800	6000	4.0	3.4	2.0	128	57
43	813	1390	17	1.4	P831_0050K302_0280 EZ503U	1840	1867	3230	139.4	17845/128	3800	3800	6000	4.0	8.0	2.0	128	58
43	944	1876	19	1.2	P831_0050K302_0280 EZ702U	1840	1867	3230	139.4	17845/128	3800	3800	6000	4.0	14	2.0	128	61
51	167	187	7.5	4.0	P831_0070K202_0170 EZ302U	555	555	885	118.0	20769/176	4000	4000	6500	3.5	0.57	1.5	128	47
51	218	250	9.8	3.1	P831_0070K202_0170 EZ303U	666	666	885	118.0	20769/176	4000	4000	6500	3.5	0.68	1.5	128	47
51	255	311	9.5	3.1	P831_0070K202_0170 EZ401U	944	944	2887	118.0	20769/176	4000	4000	6500	3.5	1.2	1.5	128	49
51	378	489	14	2.1	P831_0070K202_0170 EZ501U	1494	1494	2887	118.0	20769/176	4000	4000	6500	3.5	3.2	1.5	128	50
51	389	544	15	2.1	P831_0070K202_0170 EZ402U	1494	1494	2887	118.0	20769/176	4000	4000	6500	3.5	1.9	1.5	128	50
51	577	866	22	1.4	P831_0070K202_0170 EZ502U	1494	1494	2887	118.0	20769/176	4000	4000	6500	3.5	5.5	1.5	128	51
51	577	877	22	1.4	P831_0070K202_0170 EZ701U	1494	1494	2887	118.0	20769/176	4000	4000	6500	3.5	8.8	1.5	128	53
51	644	933	24	1.2	P831_0070K202_0170 EZ404U	1494	1494	2887	118.0	20769/176	4000	4000	6500	3.5	3.3	1.5	128	52
51	688	1177	26	1.2	P831_0070K202_0170 EZ503U	1494	1494	2887	118.0	20769/176	4000	4000	6500	3.5	7.9	1.5	128	53
51	799	1588	30	1.0	P831_0070K202_0170 EZ702U	1494	1494	2887	118.0	20769/176	4000	4000	6500	3.5	14	1.5	128	56
52	252	307	5.9	4.4	P831_0050K302_0230 EZ401U	931	931	3230	116.5	2795/24	3800	3800	6000	4.0	1.4	2.0	128	54
52	373	482	8.8	3.0	P831_0050K302_0230 EZ501U	1753	1753	3230	116.5	2795/24	3800	3800	6000	4.0	3.4	2.0	128	55
52	384	537	9.0	2.9	P831_0050K302_0230 EZ402U	1753	1753	3230	116.5	2795/24	3800	3800	6000	4.0	2.1	2.0	128	55
52	570	855	13	1.9	P831_0050K302_0230 EZ502U	1840	1867	3230	116.5	2795/24	3800	3800	6000	4.0	5.7	2.0	128	56
52	570	866	13	1.9	P831_0050K302_0230 EZ701U	1840	1867	3230	116.5	2795/24	3800	3800	6000	4.0	9.0	2.0	128	58
52	636	920	15	1.7	P831_0050K302_0230 EZ404U	1840	1867	3230	116.5	2795/24	3800	3800	6000	4.0	3.5	2.0	128	57
52	679	1162	16	1.6	P831_0050K302_0230 EZ503U	1840	1867	3230	116.5	2795/24	3800	3800	6000	4.0	8.1	2.0	128	58
52	789	1567	19	1.4	P831_0050K302_0230 EZ702U	1840	1867	3230	116.5	2795/24	3800	3800	6000	4.0	14	2.0	128	61
P931K (n_{1N} = 2000 min^{-1}, $M_{2acc,max}$ = 3110 Nm)																		
38	1915	2147	61	1.1	P931_0070K402_0075 EZ813U	3105	–	6210	52.19	12943/248	2600	2600	3800	3.5	110	–	305	111
43	1725	1935	59	1.2	P931_0070K402_0067 EZ813U	3105	–	6210	47.03	1505/32	3000	3000	4500	3.5	109	–	305	111
48	1541	1728	57	1.4	P931_0070K402_0060 EZ813U	3105	–	6210	42.00	42/1	2600	2600	3800	3.5	112	–	305	111
53	1392	1562	56	1.5	P931_0070K402_0054 EZ813U	3105	–	6210	37.95	12943/341	2600	2600	3800	3.5	111	–	305	111
53	2062	2455	83	1.0	P931_0070K402_0054 EZ815U	3105	–	6210	37.95	12943/341	2600	2600	3800	3.5	174	–	305	124
65	1121	1257	57	1.7	P931_0070K402_0044 EZ813U	3105	–	6109	30.55	336/11	2600	2600	3800	3.5	114	–	305	111
65	1660	1976	85	1.2	P931_0070K402_0044 EZ815U	3105	–	6109	30.55	336/11	2600	2600	3800	3.5	177	–	305	124
71	1027	1152	58	1.8	P931_0070K402_0040 EZ813U	3105	–	5600	28.00	28/1	2600	2600	3800	3.5	115	–	305	111
71	1521	1811	86	1.2	P931_0070K402_0040 EZ815U	3105	–	5600	28.00	28/1	2600	2600	3800	3.5	178	–	305	124
P931K (n_{1N} = 3000 min^{-1}, $M_{2acc,max}$ = 3110 Nm)																		
6.2	1964	2146	12	1.1	P931_0070K402_0690 EZ501U	3020	–	5349	485.4	38829/80	3600	3600	5500	3.5	3.0	–	305	80
7.7	1578	1724	11	1.3	P931_0070K402_0560 EZ501U	3105	–	6113	389.9	17157/44	3600	3600	5500	3.5	3.1	–	305	80
8.5	1428	1561	12	1.3	P931_0070K402_0500 EZ501U	2196	–	3890	353.0	38829/110	3600	3600	5500	3.5	3.1	–	305	80
9.3	1311	1433	11	1.6	P931_0070K402_0460 EZ501U	3105	–	6210	324.2	4214/13	3600	3600	5500	3.5	3.2	–	305	80
11	1147	1254	10	1.8	P931_0070K402_0410 EZ501U	2510	–	4446	283.6	34314/121	3600	3600	5500	3.5	3.1	–	305	80
11	1974	2135	18	1.1	P931_0070K402_0410 EZ502U	2510	–	4446	283.6	34314/121	3600	3600	5500	3.5	5.4	–	305	82
11	1974	2215	18	1.1	P931_0070K402_0410 EZ701U	2510	–	4446	283.6	34314/121	3600	3600	5500	3.5	8.7	–	305	84

n_{2N} [rpm]	M_{2N} [Nm]	$M_{2,0}$ [Nm]	a_{th}	S	Type	M_{2acc} [Nm]	M_{2accHT} [Nm]	M_{2NOT} [Nm]	i	i_{exakt}	n_{1maxDB} EL1,2 [rpm]	n_{1maxDB} EL3,4,5,6 [rpm]	n_{1maxZB} [rpm]	$\Delta\varphi_2$ [arcmin]	J_1 [kgcm²]	$\Delta\varphi_{2red}$ [arcmin]	C_2 [Nm/ arcmin]	m [kg]
P931K (n_{1N} = 3000 min^{-1}, $M_{2acc,max}$ = 3110 Nm)																		
12	984	1076	9.8	2.1	P931_0070K402_0350 EZ501U	3105	–	5849	243.3	29197/120	3600	3600	5500	3.5	3.4	–	305	80
12	1694	1831	17	1.2	P931_0070K402_0350 EZ502U	3105	–	5849	243.3	29197/120	3600	3600	5500	3.5	5.7	–	305	82
12	1694	1900	17	1.2	P931_0070K402_0350 EZ701U	3105	–	6210	243.3	29197/120	3600	3600	5500	3.5	9.0	–	305	84
13	954	1043	9.7	2.2	P931_0070K402_0340 EZ501U	3105	–	5125	235.7	33712/143	3600	3600	5500	3.5	3.2	–	305	80
13	1641	1775	17	1.3	P931_0070K402_0340 EZ502U	3105	–	5125	235.7	33712/143	3600	3600	5500	3.5	5.5	–	305	82
13	1641	1841	17	1.3	P931_0070K402_0340 EZ701U	3105	–	5125	235.7	33712/143	3600	3600	5500	3.5	8.8	–	305	84
15	787	860	9.3	2.7	P931_0070K402_0280 EZ501U	2927	–	5382	194.4	9331/48	3600	3600	5500	3.5	3.6	–	305	80
15	1354	1463	16	1.6	P931_0070K402_0280 EZ502U	3105	–	5382	194.4	9331/48	3600	3600	5500	3.5	5.9	–	305	82
15	1354	1518	16	1.6	P931_0070K402_0280 EZ701U	3105	–	6210	194.4	9331/48	3600	3600	5500	3.5	9.2	–	305	84
15	1774	2030	21	1.2	P931_0070K402_0280 EZ503U	3105	–	5382	194.4	9331/48	3600	3600	5500	3.5	8.2	–	305	83
17	716	783	9.1	2.9	P931_0070K402_0250 EZ501U	2664	–	4254	177.0	29197/165	3600	3600	5500	3.5	3.4	–	305	80
17	1232	1332	16	1.7	P931_0070K402_0250 EZ502U	3105	–	4254	177.0	29197/165	3600	3600	5500	3.5	5.7	–	305	82
17	1232	1382	16	1.7	P931_0070K402_0250 EZ701U	3105	–	6210	177.0	29197/165	3600	3600	5500	3.5	9.0	–	305	84
17	1615	1848	20	1.3	P931_0070K402_0250 EZ503U	3105	–	4254	177.0	29197/165	3600	3600	5500	3.5	8.1	–	305	83
17	1998	2398	25	1.1	P931_0070K402_0250 EZ702U	3105	–	6210	177.0	29197/165	3600	3600	5500	3.5	14	–	305	86
18	660	721	8.9	3.2	P931_0070K402_0230 EZ501U	2455	–	4892	163.0	3913/24	3600	3600	5500	3.5	3.8	–	305	80
18	1135	1227	15	1.9	P931_0070K402_0230 EZ502U	3105	–	4892	163.0	3913/24	3600	3600	5500	3.5	6.1	–	305	82
18	1135	1273	15	1.9	P931_0070K402_0230 EZ701U	3068	–	6210	163.0	3913/24	3600	3600	5500	3.5	9.4	–	305	84
18	1488	1703	20	1.4	P931_0070K402_0230 EZ503U	3105	–	4892	163.0	3913/24	3600	3600	5500	3.5	8.5	–	305	83
18	1841	2209	25	1.1	P931_0070K402_0230 EZ702U	3105	–	6210	163.0	3913/24	3600	3600	5500	3.5	15	–	305	86
18	2071	2455	28	1.0	P931_0070K402_0230 EZ505U	3105	–	6210	163.0	3913/24	3600	3600	5500	3.5	13	–	305	86
21	572	625	8.6	3.7	P931_0070K402_0200 EZ501U	2128	–	3914	141.4	9331/66	3600	3600	5500	3.5	3.7	–	305	80
21	984	1064	15	2.1	P931_0070K402_0200 EZ502U	2946	–	3914	141.4	9331/66	3600	3600	5500	3.5	6.0	–	305	82
21	984	1104	15	2.1	P931_0070K402_0200 EZ701U	2660	–	6210	141.4	9331/66	3600	3600	5500	3.5	9.3	–	305	84
21	1290	1477	19	1.6	P931_0070K402_0200 EZ503U	2946	–	3914	141.4	9331/66	3600	3600	5500	3.5	8.3	–	305	83
21	1596	1916	24	1.3	P931_0070K402_0200 EZ702U	3105	–	6210	141.4	9331/66	3600	3600	5500	3.5	14	–	305	86
21	1796	2128	27	1.2	P931_0070K402_0200 EZ505U	3105	–	6210	141.4	9331/66	3600	3600	5500	3.5	13	–	305	86
25	848	951	14	2.5	P931_0070K402_0175 EZ701U	2293	–	6210	121.8	731/6	3400	3400	5000	3.5	9.9	–	305	84
25	1376	1651	23	1.5	P931_0070K402_0175 EZ702U	3105	–	6210	121.8	731/6	3400	3400	5000	3.5	15	–	305	86
25	1548	1834	26	1.4	P931_0070K402_0175 EZ505U	3105	–	6210	121.8	731/6	3400	3400	5000	3.5	14	–	305	86
25	1891	2384	32	1.1	P931_0070K402_0175 EZ703U	3105	–	6210	121.8	731/6	3400	3400	5000	3.5	23	–	305	88
25	480	524	8.2	4.4	P931_0070K402_0170 EZ501U	1785	–	3558	118.6	3913/33	3600	3600	5500	3.5	3.9	–	305	80
25	826	893	14	2.5	P931_0070K402_0170 EZ502U	2678	–	3558	118.6	3913/33	3600	3600	5500	3.5	6.2	–	305	82
25	826	926	14	2.5	P931_0070K402_0170 EZ701U	2231	–	6210	118.6	3913/33	3600	3600	5500	3.5	9.5	–	305	84
25	1082	1238	19	1.9	P931_0070K402_0170 EZ503U	2678	–	3558	118.6	3913/33	3600	3600	5500	3.5	8.6	–	305	83
25	1339	1607	23	1.6	P931_0070K402_0170 EZ702U	3105	–	6210	118.6	3913/33	3600	3600	5500	3.5	15	–	305	86
25	1506	1785	26	1.4	P931_0070K402_0170 EZ505U	3105	–	6210	118.6	3913/33	3600	3600	5500	3.5	13	–	305	86
25	1841	2321	31	1.1	P931_0070K402_0170 EZ703U	3105	–	6210	118.6	3913/33	3600	3600	5500	3.5	23	–	305	88
31	677	759	13	3.1	P931_0070K402_0140 EZ701U	1829	–	6210	97.20	9331/96	3400	3400	5000	3.5	11	–	305	84
31	1097	1317	22	1.9	P931_0070K402_0140 EZ702U	3105	–	6210	97.20	9331/96	3400	3400	5000	3.5	16	–	305	86
31	1235	1463	25	1.7	P931_0070K402_0140 EZ505U	3105	–	6210	97.20	9331/96	3400	3400	5000	3.5	14	–	305	86
31	1509	1902	30	1.4	P931_0070K402_0140 EZ703U	3105	–	6210	97.20	9331/96	3400	3400	5000	3.5	24	–	305	88
31	1948	2762	39	1.1	P931_0070K402_0140 EZ705U	3105	–	6210	97.20	9331/96	3400	3400	5000	3.5	36	–	305	94
34	617	692	13	3.4	P931_0070K402_0125 EZ701U	1667	–	6210	88.61	2924/33	3400	3400	5000	3.5	10	–	305	84
34	1000	1201	21	2.1	P931_0070K402_0125 EZ702U	3105	–	6210	88.61	2924/33	3400	3400	5000	3.5	15	–	305	86
34	1125	1334	24	1.9	P931_0070K402_0125 EZ505U	3105	–	6210	88.61	2924/33	3400	3400	5000	3.5	14	–	305	86
34	1376	1734	29	1.5	P931_0070K402_0125 EZ703U	3105	–	6210	88.61	2924/33	3400	3400	5000	3.5	23	–	305	88
34	1776	2518	38	1.2	P931_0070K402_0125 EZ705U	3105	–	6210	88.61	2924/33	3400	3400	5000	3.5	36	–	305	94
37	561	630	13	3.7	P931_0070K402_0115 EZ701U	1517	–	6049	80.63	645/8	3000	3000	4500	3.5	11	–	305	84
37	910	1092	21	2.3	P931_0070K402_0115 EZ702U	3105	–	6049	80.63	645/8	3000	3000	4500	3.5	16	–	305	86
37	1024	1214	23	2.1	P931_0070K402_0115 EZ505U	3105	–	6049	80.63	645/8	3000	3000	4500	3.5	15	–	305	86
37	1252	1578	29	1.7	P931_0070K402_0115 EZ703U	3105	–	6049	80.63	645/8	3000	3000	4500	3.5	24	–	305	88
37	1616	2291	37	1.3	P931_0070K402_0115 EZ705U	3105	–	6210	80.63	645/8	3000	3000	4500	3.5	37	–	305	94
42	492	552	12	4.3	P931_0070K402_0100 EZ701U	1330	–	5302	70.69	9331/132	3400	3400	5000	3.5	11	–	305	84
42	798	958	20	2.6	P931_0070K402_0100 EZ702U	2727	–	5302	70.69	9331/132	3400	3400	5000	3.5	16	–	305	86
42	898	1064	23	2.3	P931_0070K402_0100 EZ505U	3105	–	5302	70.69	9331/132	3400	3400	5000	3.5	15	–	305	86
42	1097	1383	28	1.9	P931_0070K402_0100 EZ703U	3105	–	5302	70.69	9331/132	3400	3400	5000	3.5	24	–	305	88
42	1417	2009	36	1.5	P931_0070K402_0100 EZ705U	3105	–	6210	70.69	9331/132	3400	3400	5000	3.5	36	–	305	94
46	450	505	12	4.7	P931_0070K402_0092 EZ701U	1217	–	4852	64.67	16555/256	3000	3000	4500	3.5	12	–	305	84
46	730	876	20	2.9	P931_0070K402_0092 EZ702U	2495	–	4852	64.67	16555/256	3000	3000	4500	3.5	17	–	305	86
46	821	974	22	2.6	P931_0070K402_0092 EZ505U	3105	–	4852	64.67	16555/256	3000	3000	4500	3.5	16	–	305	86
46	1004	1266	27	2.1	P931_0070K402_0092 EZ703U	3105	–	4852	64.67	16555/256	3000	3000	4500	3.5	25	–	305	88
46	1296	1837	35	1.6	P931_0070K402_0092 EZ705U	3105	–	6210	64.67	16555/256	3000	3000	4500	3.5	38	–	305	94
51	662	794	19	3.2	P931_0070K402_0084 EZ702U	2262	–	4399	58.64	645/11	3000	3000	4500	3.5	17	–	305	86

n_{2N} [rpm]	M_{2N} [Nm]	$M_{2,0}$ [Nm]	a_{th}	S	Type	M_{2acc} [Nm]	M_{2accHT} [Nm]	M_{2NOT} [Nm]	i	i_{exakt}	n_{1maxDB} EL1,2 [rpm]	n_{1maxDB} EL3,4,5,6 [rpm]	n_{1maxZB} [rpm]	$\Delta\varphi_2$ [arcmin]	J_1 [kgcm²]	$\Delta\varphi_{2red}$ [arcmin]	C_2 [Nm/arcmin]	m [kg]
P931K (n_{1N} = 3000 min^{-1}, $M_{2acc,max}$ = 3110 Nm)																		
51	745	883	22	2.8	P931_0070K402_0084 EZ505U	3105	–	4399	58.64	645/11	3000	3000	4500	3.5	15	–	305	86
51	910	1148	26	2.3	P931_0070K402_0084 EZ703U	3105	–	4399	58.64	645/11	3000	3000	4500	3.5	25	–	305	88
51	1175	1666	34	1.8	P931_0070K402_0084 EZ705U	3105	–	6210	58.64	645/11	3000	3000	4500	3.5	37	–	305	94
57	1046	1483	34	1.9	P931_0070K402_0075 EZ705U	3105	–	6210	52.19	12943/248	2600	2600	3800	3.5	39	–	305	94
64	531	637	19	3.7	P931_0070K402_0067 EZ702U	1814	–	3529	47.03	1505/32	3000	3000	4500	3.5	18	–	305	86
64	597	708	22	3.3	P931_0070K402_0067 EZ505U	2656	–	3529	47.03	1505/32	3000	3000	4500	3.5	17	–	305	86
64	730	920	27	2.7	P931_0070K402_0067 EZ703U	2656	–	3529	47.03	1505/32	3000	3000	4500	3.5	26	–	305	88
64	943	1336	35	2.1	P931_0070K402_0067 EZ705U	3105	–	6210	47.03	1505/32	3000	3000	4500	3.5	39	–	305	94
71	842	1193	35	2.2	P931_0070K402_0060 EZ705U	3105	–	6210	42.00	42/1	2600	2600	3800	3.5	41	–	305	94
79	761	1078	35	2.4	P931_0070K402_0054 EZ705U	3105	–	6210	37.95	12943/341	2600	2600	3800	3.5	41	–	305	94
98	612	868	36	2.8	P931_0070K402_0044 EZ705U	2989	–	6109	30.55	336/11	2600	2600	3800	3.5	43	–	305	94
107	561	796	36	2.9	P931_0070K402_0040 EZ705U	2740	–	5600	28.00	28/1	2600	2600	3800	3.5	45	–	305	94
P931K (n_{1N} = 4000 min^{-1}, $M_{2acc,max}$ = 3110 Nm)																		
45	2101	3643	45	1.0	P931_0070K402_0125 EZ813U	3105	–	6210	88.61	2924/33	3400	3400	5000	3.5	106	–	305	111
50	1912	3315	44	1.1	P931_0070K402_0115 EZ813U	3105	–	6210	80.63	645/8	3000	3000	4500	3.5	107	–	305	111
50	1981	5093	45	1.1	P931_0070K402_0115 EZ815U	3105	–	6210	80.63	645/8	3000	3000	4500	3.5	170	–	305	124
57	1676	2906	44	1.2	P931_0070K402_0100 EZ813U	3105	–	6210	70.69	9331/132	3400	3400	5000	3.5	107	–	305	111
57	1737	4465	45	1.2	P931_0070K402_0100 EZ815U	3105	–	6210	70.69	9331/132	3400	3400	5000	3.5	170	–	305	124
62	1533	2659	44	1.3	P931_0070K402_0092 EZ813U	3105	–	6210	64.67	16555/256	3000	3000	4500	3.5	108	–	305	111
62	1589	4085	45	1.2	P931_0070K402_0092 EZ815U	3105	–	6210	64.67	16555/256	3000	3000	4500	3.5	171	–	305	124
68	1390	2411	44	1.4	P931_0070K402_0084 EZ813U	3105	–	6210	58.64	645/11	3000	3000	4500	3.5	108	–	305	111
68	1441	3704	46	1.3	P931_0070K402_0084 EZ815U	3105	–	6210	58.64	645/11	3000	3000	4500	3.5	171	–	305	124
85	1115	1934	45	1.6	P931_0070K402_0067 EZ813U	3105	–	6210	47.03	1505/32	3000	3000	4500	3.5	109	–	305	111
85	1155	2971	47	1.5	P931_0070K402_0067 EZ815U	3105	–	6210	47.03	1505/32	3000	3000	4500	3.5	172	–	305	124
P931K (n_{1N} = 4500 min^{-1}, $M_{2acc,max}$ = 3110 Nm)																		
23	1738	2798	21	1.2	P931_0070K402_0280 EZ505U	3105	–	6210	194.4	9331/48	3600	3600	5500	3.5	13	–	305	86
25	1582	2547	20	1.3	P931_0070K402_0250 EZ505U	3105	–	6210	177.0	29197/165	3600	3600	5500	3.5	13	–	305	86
25	2015	3330	26	1.0	P931_0070K402_0250 EZ703U	3105	–	6210	177.0	29197/165	3600	3600	5500	3.5	22	–	305	88
28	1457	2347	20	1.4	P931_0070K402_0230 EZ505U	3105	–	6210	163.0	3913/24	3600	3600	5500	3.5	13	–	305	86
28	1856	3068	25	1.1	P931_0070K402_0230 EZ703U	3105	–	6210	163.0	3913/24	3600	3600	5500	3.5	23	–	305	88
32	1264	2035	19	1.7	P931_0070K402_0200 EZ505U	3105	–	6210	141.4	9331/66	3600	3600	5500	3.5	13	–	305	86
32	1610	2660	24	1.3	P931_0070K402_0200 EZ703U	3105	–	6210	141.4	9331/66	3600	3600	5500	3.5	22	–	305	88
37	1089	1754	18	1.9	P931_0070K402_0175 EZ505U	3105	–	6210	121.8	731/6	3400	3400	5000	3.5	14	–	305	86
37	1387	2293	23	1.5	P931_0070K402_0175 EZ703U	3105	–	6210	121.8	731/6	3400	3400	5000	3.5	23	–	305	88
37	1880	3439	32	1.1	P931_0070K402_0175 EZ705U	3105	–	6210	121.8	731/6	3400	3400	5000	3.5	35	–	305	94
38	1060	1707	18	2.0	P931_0070K402_0170 EZ505U	3105	–	6210	118.6	3913/33	3600	3600	5500	3.5	13	–	305	86
38	1350	2231	23	1.6	P931_0070K402_0170 EZ703U	3105	–	6210	118.6	3913/33	3600	3600	5500	3.5	23	–	305	88
38	1830	3347	31	1.1	P931_0070K402_0170 EZ705U	3105	–	6210	118.6	3913/33	3600	3600	5500	3.5	35	–	305	94
46	869	1399	17	2.4	P931_0070K402_0140 EZ505U	3105	–	6210	97.20	9331/96	3400	3400	5000	3.5	14	–	305	86
46	1107	1829	22	1.9	P931_0070K402_0140 EZ703U	3105	–	6210	97.20	9331/96	3400	3400	5000	3.5	24	–	305	88
46	1500	2744	30	1.4	P931_0070K402_0140 EZ705U	3105	–	6210	97.20	9331/96	3400	3400	5000	3.5	36	–	305	94
51	792	1276	17	2.7	P931_0070K402_0125 EZ505U	3105	–	6210	88.61	2924/33	3400	3400	5000	3.5	14	–	305	86
51	1009	1667	21	2.1	P931_0070K402_0125 EZ703U	3105	–	6210	88.61	2924/33	3400	3400	5000	3.5	23	–	305	88
51	1367	2501	29	1.5	P931_0070K402_0125 EZ705U	3105	–	6210	88.61	2924/33	3400	3400	5000	3.5	36	–	305	94
56	721	1161	17	2.8	P931_0070K402_0115 EZ505U	3105	–	6049	80.63	645/8	3000	3000	4500	3.5	15	–	305	86
56	918	1517	22	2.2	P931_0070K402_0115 EZ703U	3105	–	6049	80.63	645/8	3000	3000	4500	3.5	24	–	305	88
56	1244	2276	29	1.6	P931_0070K402_0115 EZ705U	3105	–	6210	80.63	645/8	3000	3000	4500	3.5	37	–	305	94
64	632	1018	17	3.1	P931_0070K402_0100 EZ505U	3105	–	5302	70.69	9331/132	3400	3400	5000	3.5	15	–	305	86
64	805	1330	22	2.4	P931_0070K402_0100 EZ703U	3105	–	5302	70.69	9331/132	3400	3400	5000	3.5	24	–	305	88
64	1091	1995	29	1.8	P931_0070K402_0100 EZ705U	3105	–	6210	70.69	9331/132	3400	3400	5000	3.5	36	–	305	94
70	578	931	17	3.3	P931_0070K402_0092 EZ505U	3105	–	4852	64.67	16555/256	3000	3000	4500	3.5	16	–	305	86
70	736	1217	22	2.6	P931_0070K402_0092 EZ703U	3105	–	4852	64.67	16555/256	3000	3000	4500	3.5	25	–	305	88
70	998	1825	30	1.9	P931_0070K402_0092 EZ705U	3105	–	6210	64.67	16555/256	3000	3000	4500	3.5	38	–	305	94
77	524	844	17	3.5	P931_0070K402_0084 EZ505U	3105	–	4399	58.64	645/11	3000	3000	4500	3.5	15	–	305	86
77	668	1103	22	2.8	P931_0070K402_0084 EZ703U	3105	–	4399	58.64	645/11	3000	3000	4500	3.5	25	–	305	88
77	905	1655	30	2.0	P931_0070K402_0084 EZ705U	3105	–	6210	58.64	645/11	3000	3000	4500	3.5	37	–	305	94
96	420	677	18	4.1	P931_0070K402_0067 EZ505U	2656	–	3529	47.03	1505/32	3000	3000	4500	3.5	17	–	305	86
96	535	885	23	3.2	P931_0070K402_0067 EZ703U	2656	–	3529	47.03	1505/32	3000	3000	4500	3.5	26	–	305	88
96	726	1328	30	2.4	P931_0070K402_0067 EZ705U	3105	–	6210	47.03	1505/32	3000	3000	4500	3.5	39	–	305	94

11.3 Dimensional drawings

In this chapter you can find the dimensions of the geared motors.

There is a dimensional drawing for every possible shaft/housing design, each with the tables for gearbox dimensions, motor dimensions and geared motor dimensions.

Dimensions can exceed the specifications of ISO 2768-mK due to casting tolerances or accumulation of individual tolerances.

We reserve the right to make dimensional changes due to ongoing technical development.

You can download 3D models of our standard drives at https://configurator.stoeber.de/en-US/.

Combination options and the dimensions of forced ventilated geared motors can also be found at https://configurator.stoeber.de/en-US/.

Tolerances

Solid shaft	Tolerance
Fit	ISO k6
Feather keys	DIN 6885-1, high form A
Balancing	With half feather key

Centering holes in solid shafts in accordance with DIN 332-2, DR shape

Thread size	M4	M5	M6	M8	M10	M12	M16	M20	M24
Thread depth [mm]	10	12.5	16	19	22	28	36	42	50

11.3.1 G shaft design (solid shaft without feather key)

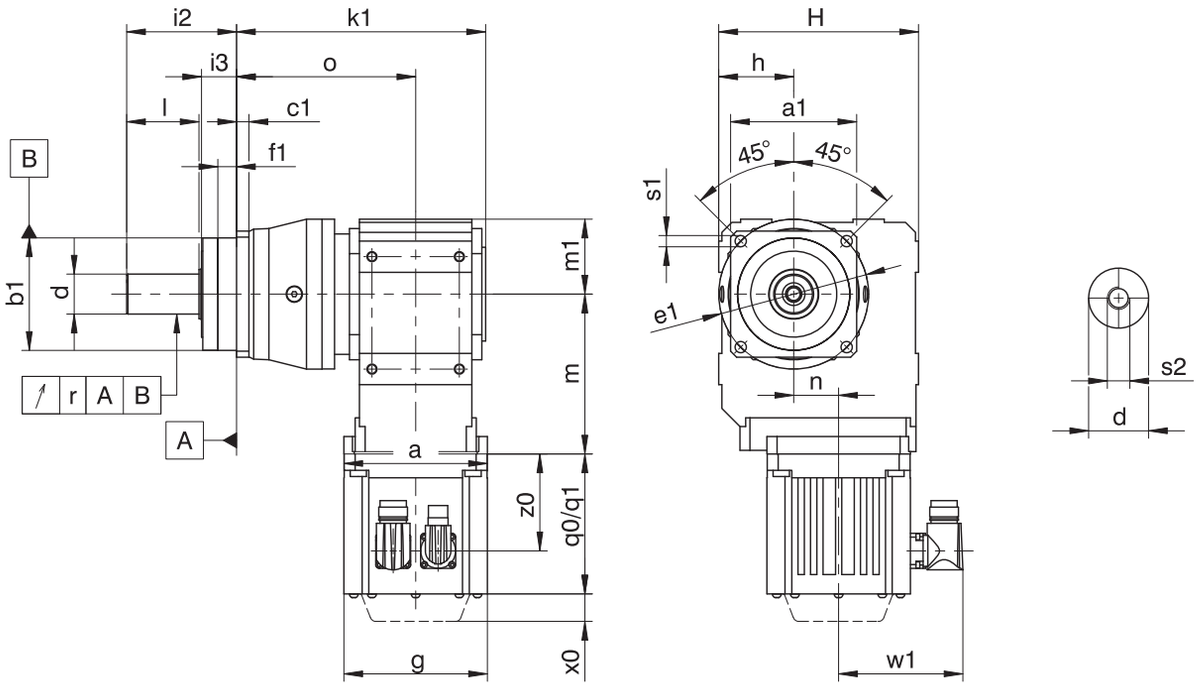

q0	Applies to motors without brake.	q1	Applies to motors with brake.
x0	Applies to encoders using an optical measuring method.	w1	Different for the One Cable Solution (OCS), see the chapter [▶ 17.4]
–	The radial runout specification applies only to the reinforced bearing D.		

Dimensions of gearboxes

Type	□a1	Øb1	c1	Ød	Øe1	f1	h	H	i2	i3	k1	l	m1	o	r	Øs1	s2
P531_K102_	101	90_{h6}	10	32_{k6}	120	15.0	60	160	88	28	199.5	58	60.0	143.5	0.030	9.0	M12
P731_K102_	144	130_{h6}	15	40_{k6}	165	3.5	60	160	112	27	212.5	82	75.0	156.5	0.035	11.0	M16
P731_K202_	144	130_{h6}	15	40_{k6}	165	3.5	65	190	112	27	240.5	82	75.0	170.5	0.035	11.0	M16
P831_K202_	190	160_{h6}	15	55_{k6}	215	10.0	65	190	112	27	277.5	82	102.0	207.5	0.035	13.5	M20
P831_K302_	190	160_{h6}	15	55_{k6}	215	10.0	75	213	112	27	291.0	82	102.0	215.0	0.035	13.5	M20
P931_K402_	212	180_{h6}	17	75_{k6}	250	10.0	90	240	143	34	350.5	105	115.0	260.5	0.040	17.5	M20

Dimensions of motors

Type	□g	q0	q1	w1	x0	z0
EZ301U	72	114.0	154.0	55.5	21	78.5
EZ302U	72	136.0	176.0	55.5	21	100.5
EZ303U	72	158.0	198.0	55.5	21	122.5
EZ401U	98	118.5	167.0	91.0	22	76.5
EZ402U	98	143.5	192.0	91.0	22	101.5
EZ404U	98	193.5	242.0	91.0	22	151.5
EZ501U	115	112.0	166.5	100.0	22	77.5
EZ502U	115	137.0	191.5	100.0	22	102.5
EZ503U	115	162.0	216.5	100.0	22	127.5
EZ505U	115	212.0	266.5	100.0	22	177.5
EZ701U	145	125.0	184.0	115.0	22	87.0
EZ702U	145	150.0	209.0	115.0	22	112.0
EZ703U	145	175.0	234.0	115.0	22	137.0
EZ705U	145	230.0	289.0	134.0	22	188.0
EZ813U	190	273.5	350.5	156.5	22	219.5
EZ815U	190	355.5	432.5	156.5	22	301.5

Dimensions of geared motors

Type	EZ3			EZ4			EZ5			EZ7			EZ8		
	a	m	n	a	m	n	a	m	n	a	m	n	a	m	n
P531_K102_	□72	124	36.0	□98	124	36.0	□115	128	36.0	□145	130	36.0	–	–	–
P731_K102_	□72	124	36.0	□98	124	36.0	□115	128	36.0	□145	130	36.0	–	–	–
P731_K202_	□72	143	46.0	□98	143	46.0	□115	147	46.0	□145	149	46.0	–	–	–
P831_K202_	□72	143	46.0	□98	143	46.0	□115	147	46.0	□145	149	46.0	–	–	–
P831_K302_	–	–	–	∅140	163	52.5	□115	167	52.5	□145	169	52.5	–	–	–
P931_K402_	–	–	–	–	–	–	∅160	187	60.0	□145	189	60.0	□190	192	60.0

11.3.2 P shaft design (solid shaft with feather key)

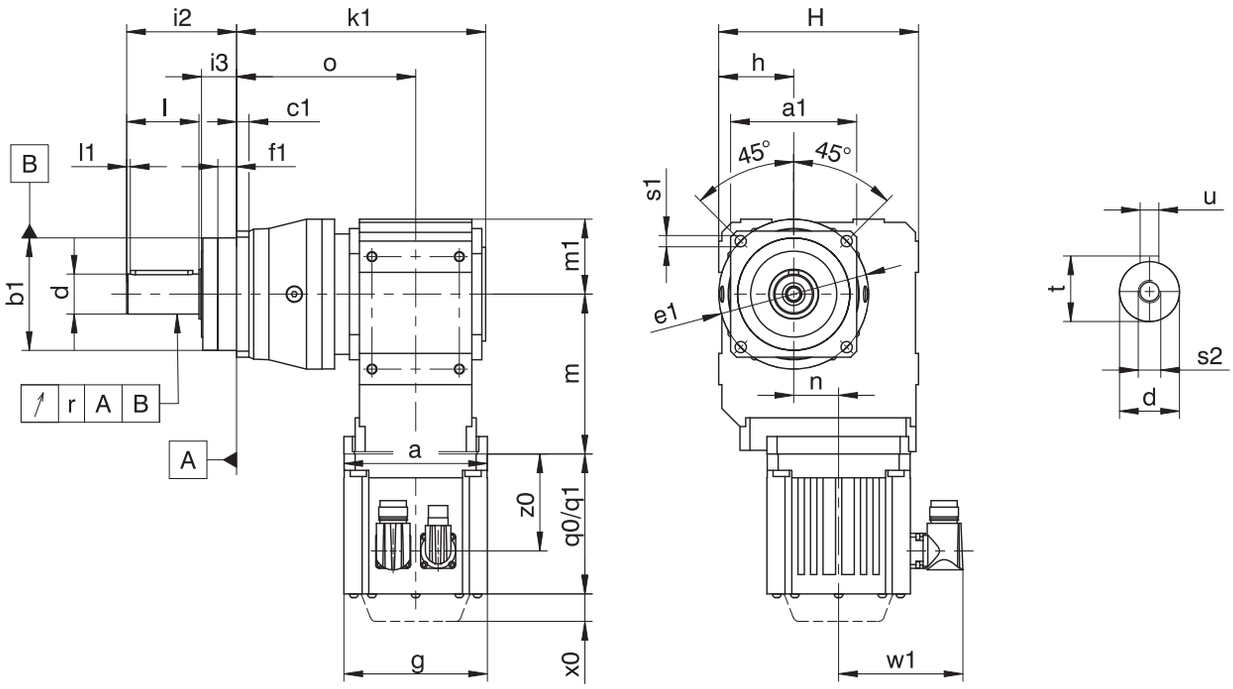

q0	Applies to motors without brake.	q1	Applies to motors with brake.
x0	Applies to encoders using an optical measuring method.	w1	Different for the One Cable Solution (OCS), see the chapter [▷ 17.4]
–	The radial runout specification applies only to the reinforced bearing D.		

Dimensions of gearboxes

Type	□a1	Øb1	c1	Ød	Øe1	f1	h	H	i2	i3	k1	l	l1	m1	o	r	Øs1	s2	t	u
P531_K102_	101	90_{h6}	10	32_{k6}	120	15.0	60	160	88	28	199.5	58	3	60.0	143.5	0.030	9.0	M12	35.0	A10×8×50
P731_K102_	144	130_{h6}	15	40_{k6}	165	3.5	60	160	112	27	212.5	82	4	75.0	156.5	0.035	11.0	M16	43.0	A12×8×70
P731_K202_	144	130_{h6}	15	40_{k6}	165	3.5	65	190	112	27	240.5	82	4	75.0	170.5	0.035	11.0	M16	43.0	A12×8×70
P831_K202_	190	160_{h6}	15	55_{k6}	215	10.0	65	190	112	27	277.5	82	6	102.0	207.5	0.035	13.5	M20	59.0	A16×10×70
P831_K302_	190	160_{h6}	15	55_{k6}	215	10.0	75	213	112	27	291.0	82	6	102.0	215.0	0.035	13.5	M20	59.0	A16×10×70
P931_K402_	212	180_{h6}	17	75_{k6}	250	10.0	90	240	143	34	350.5	105	7	115.0	260.5	0.040	17.5	M20	79.5	A20×12×90

Dimensions of motors

Type	□g	q0	q1	w1	x0	z0
EZ301U	72	114.0	154.0	55.5	21	78.5
EZ302U	72	136.0	176.0	55.5	21	100.5
EZ303U	72	158.0	198.0	55.5	21	122.5
EZ401U	98	118.5	167.0	91.0	22	76.5
EZ402U	98	143.5	192.0	91.0	22	101.5
EZ404U	98	193.5	242.0	91.0	22	151.5
EZ501U	115	112.0	166.5	100.0	22	77.5
EZ502U	115	137.0	191.5	100.0	22	102.5
EZ503U	115	162.0	216.5	100.0	22	127.5
EZ505U	115	212.0	266.5	100.0	22	177.5
EZ701U	145	125.0	184.0	115.0	22	87.0
EZ702U	145	150.0	209.0	115.0	22	112.0
EZ703U	145	175.0	234.0	115.0	22	137.0
EZ705U	145	230.0	289.0	134.0	22	188.0
EZ813U	190	273.5	350.5	156.5	22	219.5
EZ815U	190	355.5	432.5	156.5	22	301.5

Dimensions of geared motors

Type	EZ3			EZ4			EZ5			EZ7			EZ8		
	a	m	n	a	m	n	a	m	n	a	m	n	a	m	n
P531_K102_	□72	124	36.0	□98	124	36.0	□115	128	36.0	□145	130	36.0	–	–	–
P731_K102_	□72	124	36.0	□98	124	36.0	□115	128	36.0	□145	130	36.0	–	–	–
P731_K202_	□72	143	46.0	□98	143	46.0	□115	147	46.0	□145	149	46.0	–	–	–
P831_K202_	□72	143	46.0	□98	143	46.0	□115	147	46.0	□145	149	46.0	–	–	–
P831_K302_	–	–	–	∅140	163	52.5	□115	167	52.5	□145	169	52.5	–	–	–
P931_K402_	–	–	–	–	–	–	∅160	187	60.0	□145	189	60.0	□190	192	60.0

11.4 Type designation

In this chapter, you can find an explanation of the type designation with the associated options.

Additional ordering information not included in the type designation can be found at the end of the chapter.

Example code

P	5	3	1	S	G	S	S	0050	K102VF	0060	EZ401U

Explanation

Code	Designation	Design
P	Type	Planetary gearbox
5	Size	5 (example)
3	Generation	Generation 3
1	Stages	Single-stage
S	Housing	Standard
G	Shaft	Solid shaft without feather key
P		Solid shaft with feather key
S	Bearing	Standard bearing
D		Axially reinforced bearing (P3 – P9)
Z		Radially reinforced bearing (P3 – P9)[1]
S	Backlash	Standard
R		Reduced
0050	Transmission ratio of output (i x 10)	i = 5 (example)
K102VF	Input	K1 right-angle geared motor (example)
0060	Transmission ratio of input (i x 10)	i = 6 (example)
EZ401U	Motor	EZ synchronous servo motor

To complete the type designation, also specify the following in your order:

- For a detailed type designation of the motor, see the chapter [▶ 17.5]
- For the mounting position, see the chapter [▶ 11.5.3]
- Output gearbox side 3 or 4, see the chapter [▶ 11.5.3]
- Radial shaft seal rings at the output made of NBR or FKM (option), see the chapter [▶ 11.6.3]
- Position of the plug connectors, see the chapter [▶ 11.5.5]
- Reverse operation of the output shaft from ±20° to ±90° and horizontal installation, see the chapter [▶ 11.6.4]

To make selecting your geared motor easy, use our STOBER Configurator at https://configurator.stoeber.de/en-US/.

You can find a detailed description of the nameplate in the chapter [▶ 17.5.1].

[1] Not for reduced-backlash option.

11.5 Product description

11.5.1 Input options

EZ synchronous servo motor

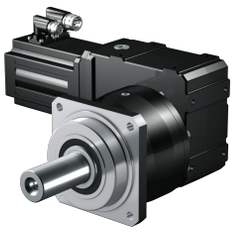

Catalog ID 442437_en

MB motor adapter +
EZ synchronous servo motor

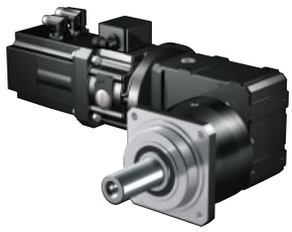

Catalog ID 443311_en

The corresponding catalogs can be found at http://www.stoeber.de/en/downloads/

Enter the ID of the catalog in the Search term field.

11.5.2 Installation conditions

The specified torques and forces only apply when gearboxes are fastened on the machine side using screws of strength class 12.9. In addition, the gear housings must be adjusted at the pilot. The machine-side fit must be H7.

11.5.3 Mounting positions

The following table shows the standard mounting positions.

The numbers identify the gearbox sides. The mounting position is defined by the gearbox side facing downwards.

EL1	EL2	EL3
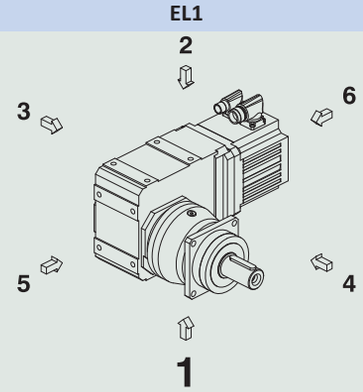	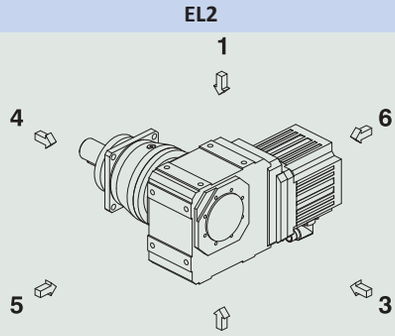	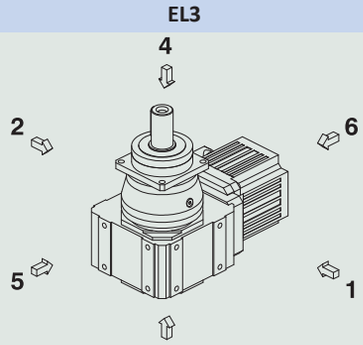
EL4	**EL5**	**EL6**
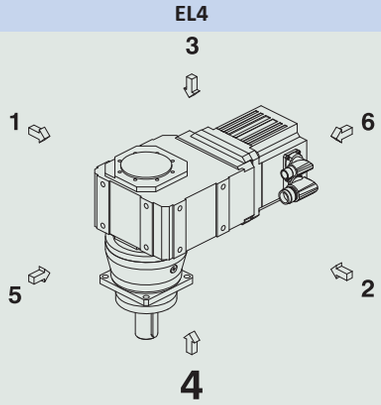	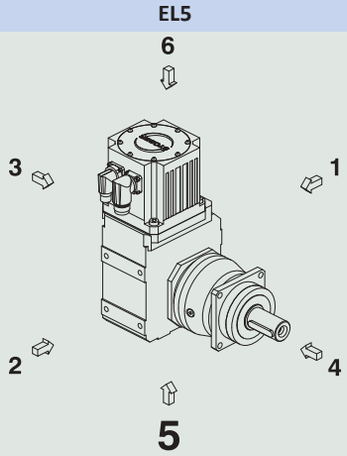	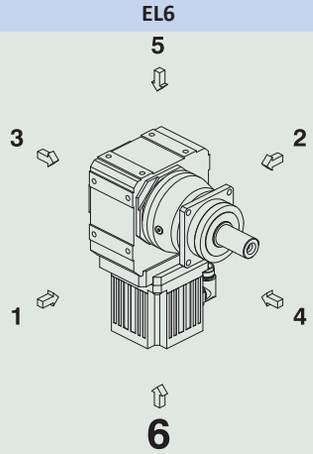

Since the lubricant filling volume of the gearbox depends on the mounting position, the mounting position must be specified when ordering.

11.5.4 Lubricants

STOBER fills the gearboxes with the amount and type of lubricant specified on the nameplate. The filling volume and the structure of the gearboxes depend on the mounting position.

Only install the gearboxes in the intended mounting position! Reposition the gearboxes only after consulting STOBER. Otherwise, STOBER assumes no liability for the gearboxes.

You will receive lubricants for use in the food industry upon request.

11.5.5 Position of the plug connectors

Mounting position EL1	Mounting position EL4
Plug connector in 270° position (standard)	Plug connector in 270° position (standard)
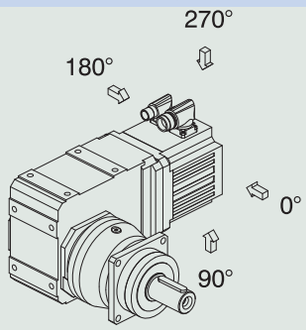	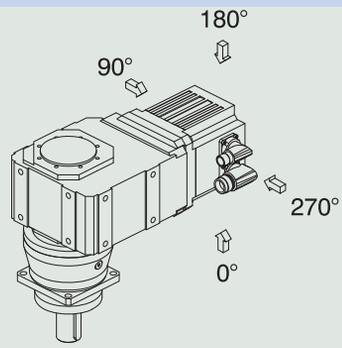

Indicate variations for your geared motor in the order.

Note that the plug connector position rotates along with the geared motor if the geared motor is in another mounting position.

11.5.6 Other product features

Feature	Value
Max. permitted gearbox temperature (on the surface of the gearbox)	≤ 90 °C
Paint	Black RAL 9005
Explosion-proof design in accordance with (ATEX) Directive 2014/34/EU (optional)	Not available
Efficiency:	
η_{get} three-stage	94%
Protection class:[2]	
Gearbox	IP65
Motor	IP56, optionally IP66

11.5.7 Direction of rotation

Output side 4	Output side 3
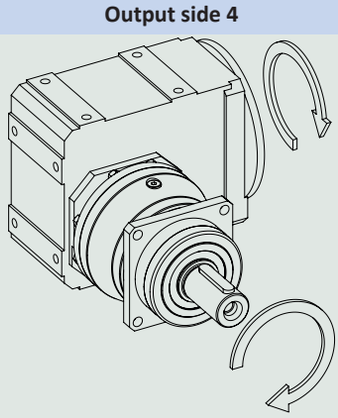	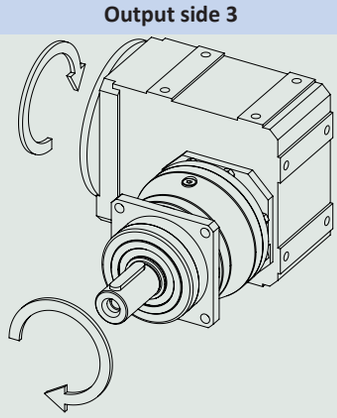

The pictures show mounting position EL1.

[2] Observe the protection class of all the components.

11.6 Project configuration

Project your drives using our SERVOsoft designing software. Download SERVOsoft free of charge after registration at https://www.stoeber.de/en/services/info-servosoft/.

It is the most convenient and reliable method of drive selection, as the entire torque/speed curve of the application is displayed and evaluated here in the curve of the geared motor.

In this chapter, only limit values for specific operating points can be taken into consideration for manual drive selection.

An explanation of the formula symbols can be found in Chapter [▷ 20.1].

The formula symbols for values actually present in the application are marked with *.

11.6.1 Drive selection

Drive selection for gearboxes

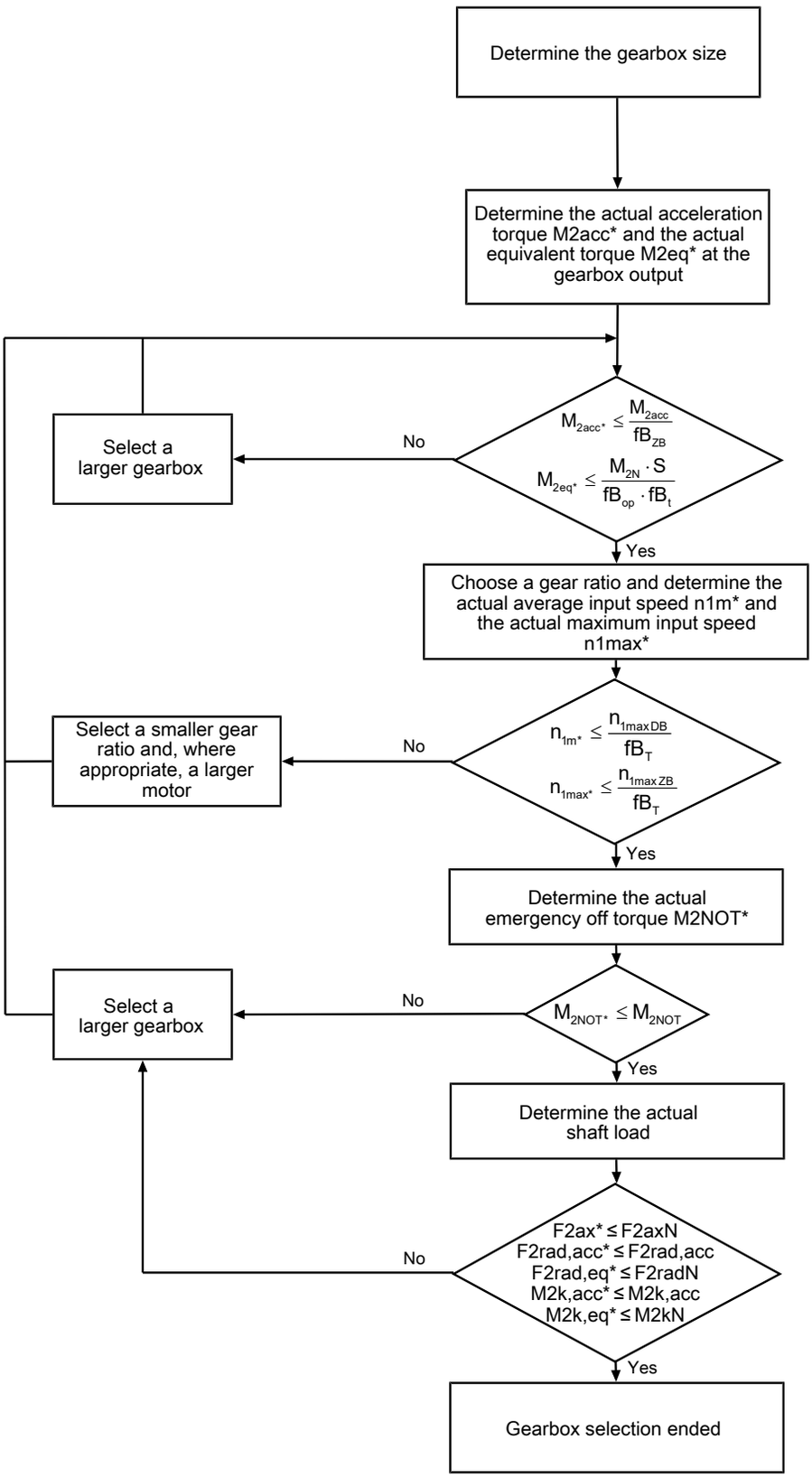

Calculate the forces and tilting torques in the chapter Permitted shaft loads.

Refer to the selection tables for the values for i, n_{1maxDB}, n_{1maxZB}, M_{2acc} (M_{2accHT} for reduced backlash), M_{2NOT}, M_{2N} and S.

The values for fB_T, fB_{op}, fB_t and fB_{ZB} can be found in the corresponding tables in this chapter.

Drive selection for motors

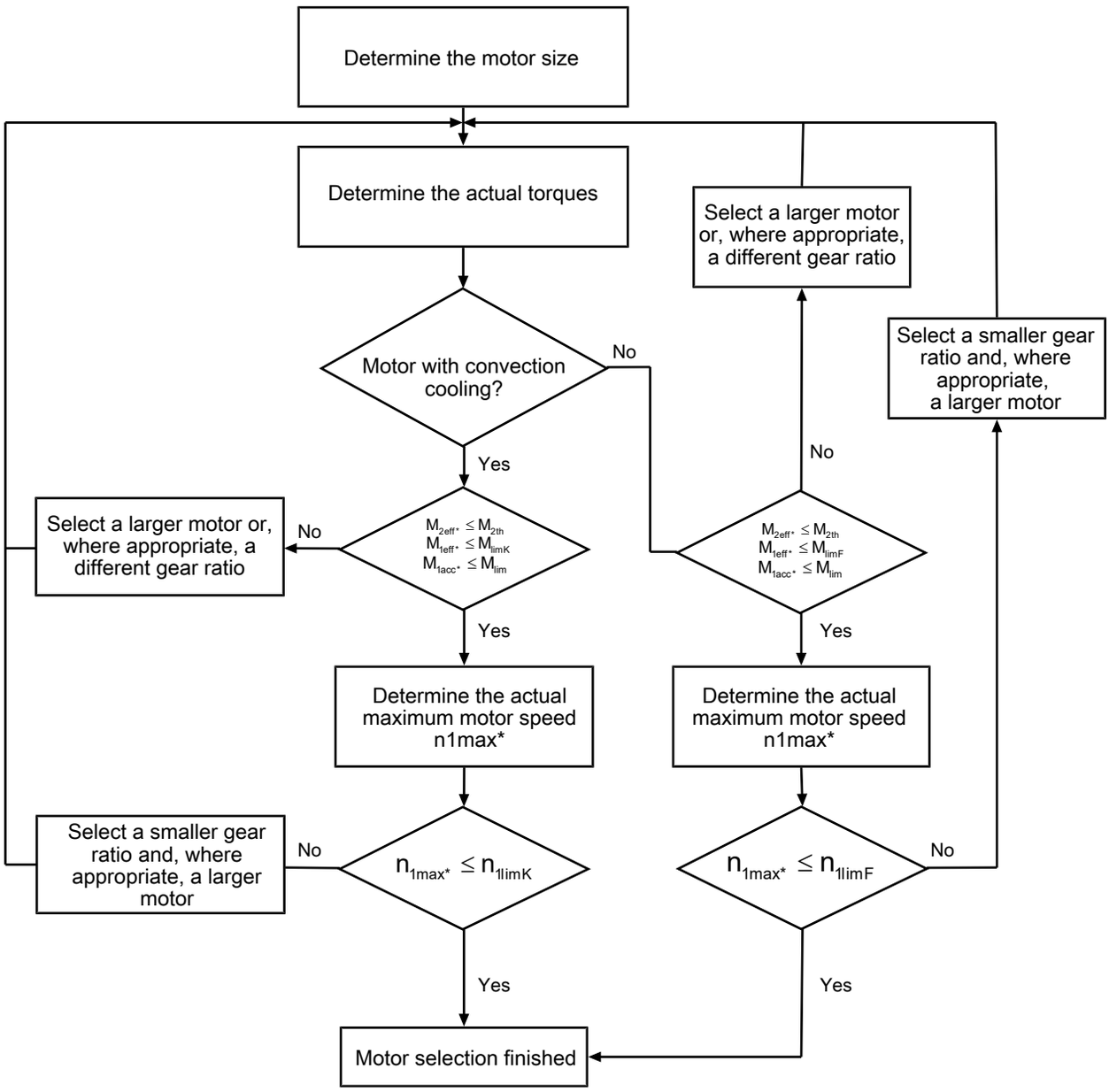

The value for M_{lim}, M_{limK}, M_{limF}, n_{1limK} and n_{1limF} can be found in the motor characteristic curve in the chapter [▶ 17.3]. Note the size, nominal speed n_N and cooling type of the motor.

Example of cyclic operation

The following calculations are based on a representation of the power taken from the output based in accordance with the following example:

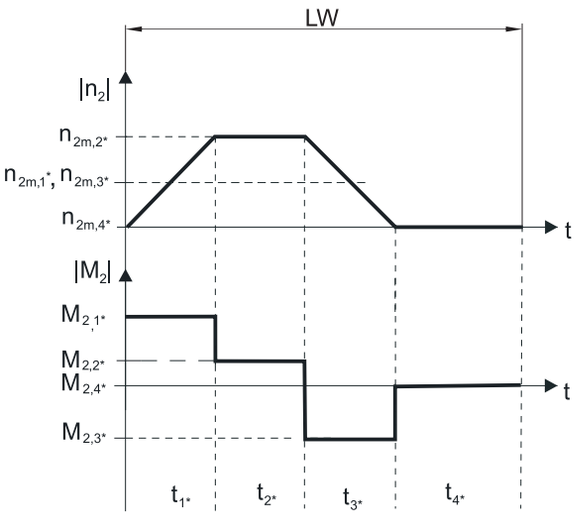

Calculation of the actual maximum acceleration torques

$$M_{2acc*} = J_{tot} \cdot \frac{\Delta n_2}{9{,}55 \cdot \Delta t} + M_{L*}$$

$$M_{1acc*} = \frac{M_{2acc*}}{i \cdot \eta_{get}} + J_1 \cdot \frac{\Delta n_1}{9{,}55 \cdot \Delta t}$$

Calculation of the actual average input speed

$$n_{1m*} = n_{2m*} \cdot i$$

$$n_{2m*} = \frac{\left|n_{2m,1*}\right| \cdot t_{1*} + \ldots + \left|n_{2m,n*}\right| \cdot t_{n*}}{t_{1*} + \ldots + t_{n*}}$$

If $t_{1*} + \ldots + t_{3*} \geq 6$ min, calculate n_{2m*} without the rest phase t_{4*}.

The values for the ratio i can be found in the selection tables.

Calculation of the actual effective torque

$$M_{2eff*} = \sqrt{\frac{t_{1*} \cdot M_{2,1*}{}^2 + \ldots + t_{n*} \cdot M_{2,n*}{}^2}{t_{1*} + \ldots + t_{n*}}}$$

Calculation of the actual emergency off torque

$$M_{2NOT*} = J_{tot} \cdot \frac{\Delta n_2}{9.55 \cdot \Delta t} + M_{L*}$$

Calculation of the actual equivalent torque

$$M_{2eq*} = \sqrt[3]{\frac{\left|n_{2m,1*}\right| \cdot t_{1*} \cdot \left|M_{2,1*}{}^3\right| + \ldots + \left|n_{2m,n*}\right| \cdot t_{n*} \cdot \left|M_{2,n*}{}^3\right|}{\left|n_{2m,1*}\right| \cdot t_{1*} + \ldots + \left|n_{2m,n*}\right| \cdot t_{n*}}}$$

Calculation of the thermal limit torque

Calculate the thermal limit torque M_{2th} for a duty cycle $ED_{10} > 50\%$ and the actual average input speed n_{1m*}. (At $K_{mot,th} \leq 0$ you must reduce the average input speed n_{1m*} accordingly or select another geared motor size.)

$$M_{2th} = M_{op} \cdot i \cdot K_{mot,th}$$

$$K_{mot,th} = 0{,}95 - \frac{a_{th}}{1000} \cdot athEL \cdot fB_T \cdot \left(\frac{n_{1m*}}{1000}\right)^2$$

The values for i and a_{th} can be found in the selection tables.

The values for a_{thEL} and fB_T can be found in the corresponding tables in this chapter.

The value for the torque of the motor at operating point M_{op} with the determined average input speed n_{1m*} can be found in the motor characteristic curve in the chapter [▶ 17.3]. Note the size, nominal speed n_N and cooling type of the motor. The figure below shows an example of reading the torque M_{op} of a motor with convection cooling at the operating point.

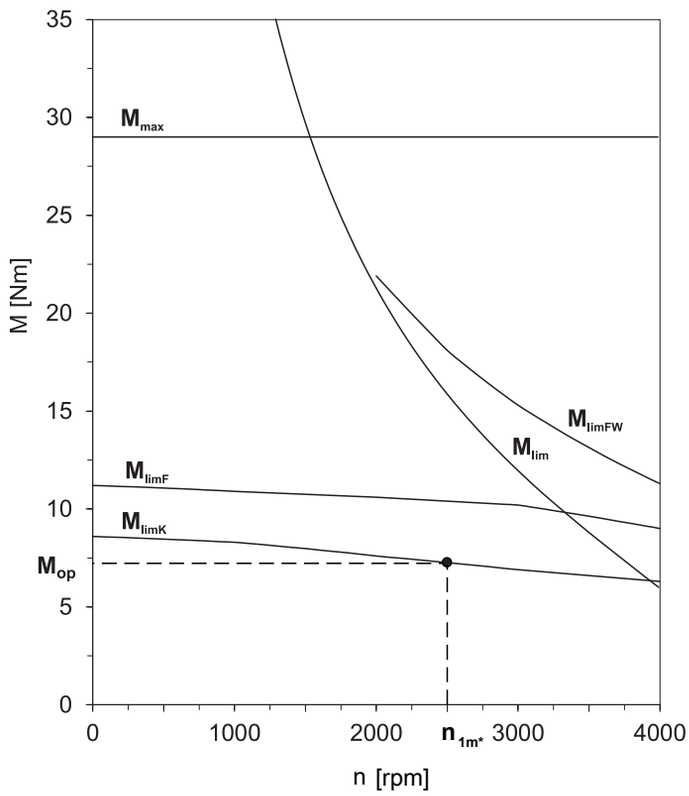

Operating factors

Parameter a_{thEL}

Mounting position	a_{thEL}
EL1, 2	1.0
EL3, 4, 5, 6	1.1

Operating mode	fB_{op}
Uniform continuous operation	1.00
Cyclic operation	1.25
Reversing load cyclic operation	1.40

Run time	fB_t
Daily runtime ≤ 8 h	1.00
Daily runtime ≤ 16 h	1.15
Daily runtime ≤ 24 h	1.20

Cyclic operation	fB_{ZB}
≤ 1000 load changes/hour (LW/h)	1.00
> 1000 load changes/hour (LW/h)	1.15

Temperature		fB_T
Motor cooling	**Surrounding temperature**	
Motor with forced ventilation	≤ 20 °C	0.9
	≤ 30 °C	1.0
	≤ 40 °C	1.15
Motor with convection cooling	≤ 20 °C	1.0
	≤ 30 °C	1.1
	≤ 40 °C	1.25

Notes

- The maximum permitted gearbox temperature (see the "Other product features" chapter) must not be exceeded. Doing so may result in damage to the geared motor.
- For braking from full speed (for example when the power fails or when setting up the machine), note the permitted gearbox torques (M_{2acc}, M_{2NOT}) in the selection tables.

11.6.2 Permitted shaft loads for the output shaft

The values specified in the tables apply to the permitted shaft loads:

- For shaft dimensions in accordance with the catalog
- For output speeds $n_{2m*} \leq 100$ rpm ($F^{2axN} = F_{2ax100}$; $F_{2radN} = F_{2rad100}$; $M_{2kN} = M_{2k100}$)
- Only if radial forces on the gearbox are stabilized by its pilots (housing, flange shaft)

Permitted shaft loads for standard bearing S

Type	z_2 [mm]	F_{2ax100} [N]	$F_{2rad100}$ [N]	$F_{2rad,acc}$ [N]	M_{2k100} [Nm]	$M_{2k,acc}$ [Nm]
P2	17.0	500	1200	1300	34	36
P3	17.5	1000	2500	2500	79	79
P4	18.5	1500	4000	4500	146	164
P5	19.5	2300	6500	7000	315	340
P7	23.0	2900	8500	9000	544	576
P8	24.5	4700	13000	18000	852	1179
P9	33.0	6000	18000	27000	1539	2309

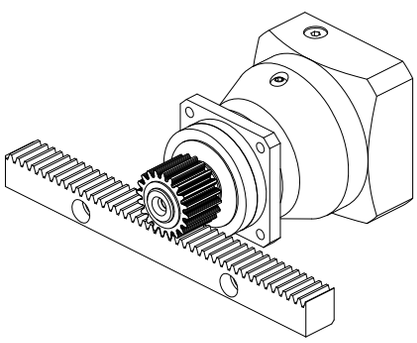

Fig. 1: Recommendation for bearing assignment S (e.g. for straight-cut gearing)

Permitted shaft loads for axially reinforced bearing D

Type	z_2	F_{2ax100}	$F_{2rad100}$	$F_{2rad,acc}$	M_{2k100}	$M_{2k,acc}$
	[mm]	[N]	[N]	[N]	[Nm]	[Nm]
P3	20.0	2500	2750	2750	94	94
P4	22.5	4000	4500	5000	182	203
P5	25.5	6000	7000	8000	382	436
P7	29.0	10000	9500	10000	665	700
P8	32.0	15500	15000	18000	1095	1314
P9	44.0	25000	20000	30000	1930	2895

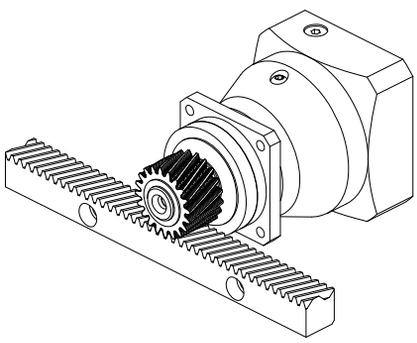

Fig. 2: Recommendation for bearing assignment D (e.g. for helical gearing)

Permitted shaft loads for radially reinforced bearing Z

Type	z_2	F_{2ax100}	$F_{2rad100}$	$F_{2rad,acc}$	M_{2k100}	$M_{2k,acc}$
	[mm]	[N]	[N]	[N]	[Nm]	[Nm]
P3	17.5	600	3000	3000	95	95
P4	18.5	1000	5000	5000	183	183
P5	19.5	1600	8000	8000	388	388
P7	23.0	2000	10000	10000	640	640
P8	24.5	3600	18000	18000	1179	1179
P9	33.0	5000	27000	35000	2309	2993

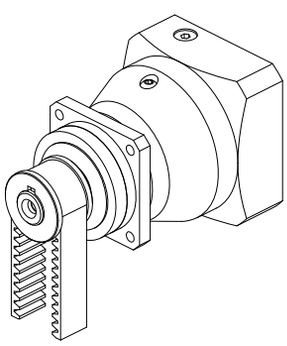

Fig. 3: Recommendation for bearing assignment Z (e.g. for belt drives)

For other output speeds, download diagrams at https://configurator.stoeber.de/en-US/.

The following applies to output speeds n_{2m*} > 100 rpm:

$$F_{2axN} = \frac{F_{2ax100}}{\sqrt[3]{\frac{n_{2m*}}{100\ rpm}}} \qquad F_{2radN} = \frac{F_{2rad100}}{\sqrt[3]{\frac{n_{2m*}}{100\ rpm}}} \qquad M_{2kN} = \frac{M_{2k100}}{\sqrt[3]{\frac{n_{2m*}}{100\ rpm}}}$$

The values for F_{2ax100}, $F_{2rad100}$ and M_{2k100} can be found in the table "Permitted shaft loads" in this chapter.

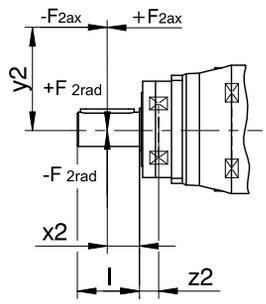

Fig. 4: Force application points

The specified values for $F_{2rad100}$ and $F_{2rad,acc}$ refer to an application of force at the center of the output shaft: $x_2 = l/2$.

Shaft dimensions can be found in the "Dimensional drawings" chapter.

The following applies to other force application points:

$$M_{2k,acc^*} = \frac{2 \cdot F_{2ax^*} \cdot y_2 + F_{2rad,acc^*} \cdot (x_2 + z_2)}{1000}$$

For applications with multiple axial and/or radial forces, you must add the forces as vectors.

In the event of EMERGENCY OFF operation (max. 1000 load changes), you can multiply the permitted forces and torques for F_{2ax100}, $F_{2rad100}$ and M_{2k100} by a factor of two.

Also note the calculation for equivalent values:

$$M_{2k,eq^*} = \sqrt[3]{\frac{|n_{2m,1^*}| \cdot t_{1^*} \cdot |M_{2k,acc,1^*}|^3 + \ldots + |n_{2m,n^*}| \cdot t_{n^*} \cdot |M_{2k,acc,n^*}|^3}{|n_{2m,1^*}| \cdot t_{1^*} + \ldots + |n_{2m,n^*}| \cdot t_{n^*}}}$$

$$F_{2rad,eq^*} = \sqrt[3]{\frac{|n_{2m,1^*}| \cdot t_{1^*} \cdot |F_{2rad,acc,1^*}|^3 + \ldots + |n_{2m,n^*}| \cdot t_{n^*} \cdot |F_{2rad,acc,n^*}|^3}{|n_{2m,1^*}| \cdot t_{1^*} + \ldots + |n_{2m,n^*}| \cdot t_{n^*}}}$$

The following apply to the bearing service life L_{10h} ($ED_{10} \leq 40\%$):

$L_{10h} > 10000$ h with $1 < M_{2kN}/M_{2k^*} < 1.25$

$L_{10h} > 20000$ h with $1.25 < M_{2kN}/M_{2k^*} < 1.5$

$L_{10h} > 30000$ h with $1.5 < M_{2kN}/M_{2k^*}$

For different duty cycles:

$$L_{10h} > L_{10h(ED_{10}=40\%)} \cdot \frac{40\%}{ED_{10}}$$

11.6.3 Recommendation for radial shaft seal rings

For a duty cycle > 60% and higher surrounding temperatures, we recommend radial shaft seal rings made of FKM at the output.

Properties:

- Excellent temperature resistance
- High chemical stability
- Very good resistance to aging
- Excellent resistance in oils and greases
- For use in the food, beverage and pharmaceutical industries

Leak-proofness

Our gearboxes are equipped with high-quality radial shaft seal rings and checked for leaks. However, a leak cannot be fully ruled out over the length of use of a gearbox. If you use a gearbox with goods incompatible with the lubricant, you must take measures to prevent direct contact with the gearbox lubricant in case of a leak.

11.6.4 Reverse operation

To ensure lubrication for circulating gearing parts during cyclic reverse operation from ± 20° to ± 90° at the output, pay careful attention to the position of the output shaft for the horizontal mounting of the gearbox, as shown in the diagrams below. The images show the center position of reverse operation. Cyclic reverse operation ≤ ± 20° on request.

Solid shaft without feather key	Solid shaft with feather key
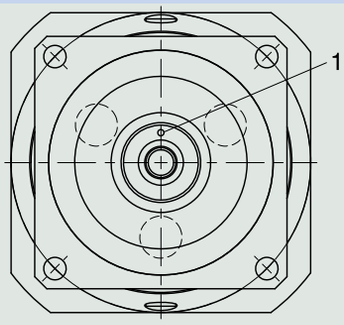	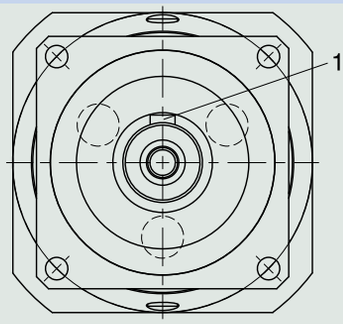
1 Position of the mark: top	1 Position of the feather key: top

Notes

- If you use the solid shaft without a feather key (G), you must note the position of the mark during assembly.
- As an alternative, you can use the solid shaft with a feather key (P). In that case, the feather key functions for position orientation. For a backlash-free connection, also use a clamp.

11.7 Additional documentation

Additional documentation related to the product can be found at
http://www.stoeber.de/en/downloads/

Enter the ID of the documentation in the Search term field.

Documentation	ID
Operating manual gearboxes, geared motors P53K – P93K	443360_en

12 PHKX right-angle planetary geared motors

Table of contents

12.1 Overview 336

12.2 Selection tables 337

12.3 Dimensional drawings 351

12.3.1 F shaft design (flange shaft) 352

12.4 Type designation 354

12.5 Product description 355

12.5.1 Input options 355

12.5.2 Installation conditions 355

12.5.3 Mounting positions 355

12.5.4 Lubricants 356

12.5.5 Position of the plug connectors 356

12.5.6 Other product features 356

12.5.7 Direction of rotation 356

12.6 Project configuration 357

12.6.1 Drive selection 358

12.6.2 Permitted shaft loads for the output shaft 362

12.6.3 Recommendation for radial shaft seal rings 363

12.6.4 Reverse operation 364

12.7 Additional documentation 364

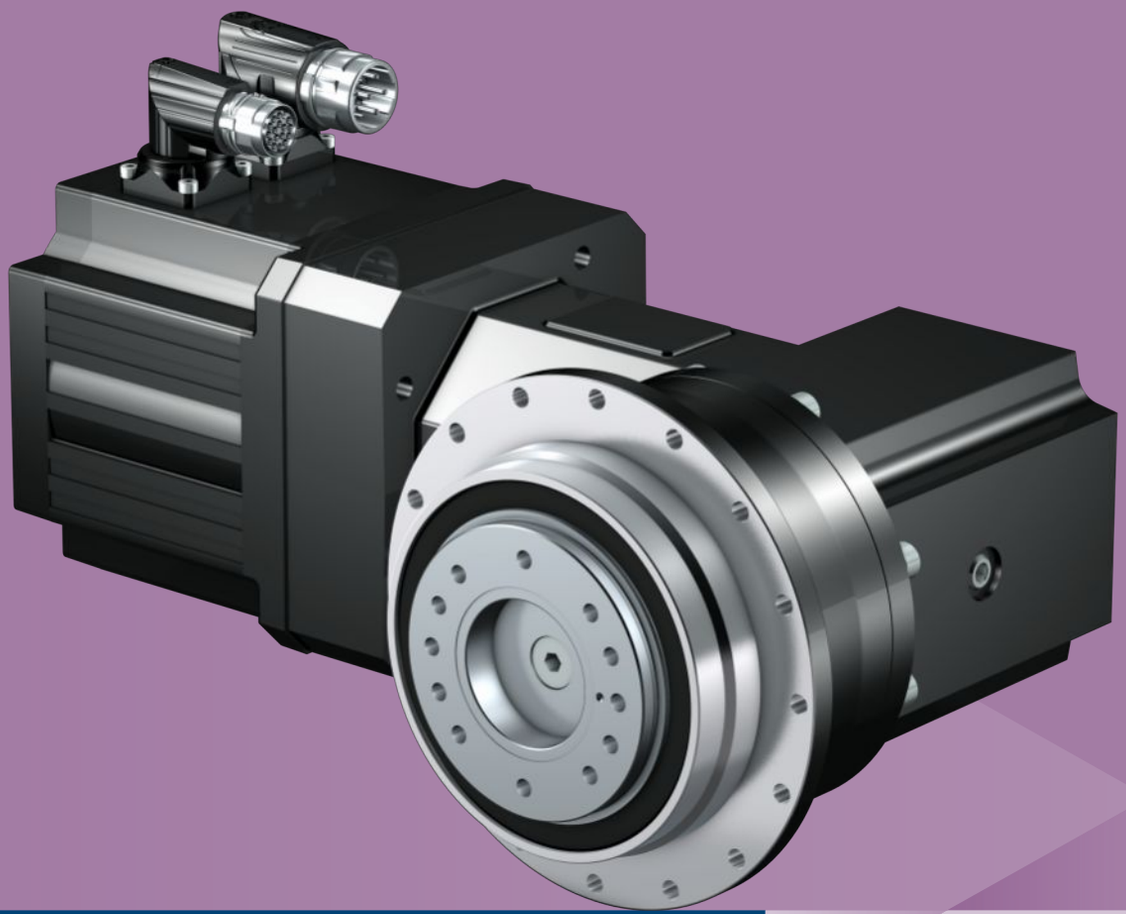

12

Right-angle planetary geared motors

PHKX

12.1 Overview

High-performance precision right-angle planetary geared motors

Features

Power density	★★★★★
Backlash	★★★★★
Price category	€€€€
Shaft load	★★★★★
Smooth operation	★★☆☆☆
Torsional stiffness	★★★★☆
Mass moment of inertia	★★★☆☆
Helical gearing	✓
Maintenance-free	✓
Small installation space	✓
Continuous operation without cooling	✓
Stiff output bearings due to pretension	✓
Reinforced output bearing (PH3 – PH5)	✓ (optional)
Compact and highly dynamic due to direct motor attachment	✓

Key ★☆☆☆☆ good | ★★★★★ excellent
€ Economy | €€€€€ Premium

Technical data

i	4 – 210
M_{2acc}	26 – 6975 Nm
$\Delta\phi_2$	1 – 6 arcmin
η_{get}	92 – 95 %

12.2 Selection tables

The technical data specified in the selection tables applies to:

- Installation altitudes up to 1000 m above sea level
- Surrounding temperatures from 0 °C to 40 °C
- Drives with convection-cooled motors (e.g. EZ401**U**)

For the technical data on drives with forced ventilated motors (e.g. EZ401**B**), refer to https://configurator.stoeber.de/en-US/.

In the case of the version with a reinforced bearing and gear ratios ≤ 5, the maximum permitted input speed n_{1maxZB} is reduced. You can find values at https://configurator.stoeber.de/en-US/

An explanation of the formula symbols can be found in Chapter [▷ 20.1].

n_{2N} [rpm]	M_{2N} [Nm]	$M_{2,0}$ [Nm]	a_{th}	S	Type	M_{2acc} [Nm]	M_{2accHT} [Nm]	M_{2NOT} [Nm]	i	i_{exakt}	n_{1maxDB} EL1,2,5,6 [rpm]	n_{1maxDB} EL3,4 [rpm]	n_{1maxZB} [rpm]	J_1 [kgcm²]	$\Delta\varphi_2$ [arcmin]	$\Delta\varphi_{2red}$ [arcmin]	C_2 [Nm/arcmin]	m [kg]
PH331KX (n_{1N} = 3000 min^{-1}, $M_{2acc,max}$ = 75 Nm)																		
100	26	27	31	1.4	PH331_0100KX301_0030 MF EZ301U	60	60	120	30.00	30/1	3500	3500	6000	0.94	5.0	3.0	7.8	5.0
143	18	19	17	2.4	PH331_0070KX301_0030 MF EZ301U	56	56	150	21.00	21/1	3500	3500	6000	0.94	5.5	3.5	8.4	5.0
143	32	33	30	1.4	PH331_0070KX301_0030 MF EZ302U	75	77	150	21.00	21/1	3500	3500	6000	1.0	5.5	3.5	8.4	5.6
143	41	43	38	1.1	PH331_0070KX301_0030 MF EZ303U	75	77	150	21.00	21/1	3500	3500	6000	1.1	5.5	3.5	8.4	6.1
150	18	18	28	2.0	PH331_0100KX301_0020 MF EZ301U	53	53	120	20.00	20/1	3500	3000	5500	1.0	5.0	3.0	7.8	5.0
150	30	32	48	1.2	PH331_0100KX301_0020 MF EZ302U	60	60	120	20.00	20/1	3500	3000	5500	1.1	5.0	3.0	7.8	5.6
200	13	13	13	3.2	PH331_0050KX301_0030 MF EZ301U	40	40	130	15.00	15/1	3500	3500	6000	0.94	6.0	4.0	6.9	5.0
200	23	24	23	1.9	PH331_0050KX301_0030 MF EZ302U	62	62	130	15.00	15/1	3500	3500	6000	1.0	6.0	4.0	6.9	5.6
200	29	31	29	1.4	PH331_0050KX301_0030 MF EZ303U	62	62	130	15.00	15/1	3500	3500	6000	1.2	6.0	4.0	6.9	6.1
200	40	43	40	1.1	PH331_0050KX301_0030 MF EZ401U	62	62	130	15.00	15/1	3500	3500	6000	1.7	6.0	4.0	6.9	7.5
214	12	13	16	3.7	PH331_0070KX301_0020 MF EZ301U	37	37	150	14.00	14/1	3500	3000	5500	1.0	5.5	3.5	8.4	5.0
214	21	22	27	2.1	PH331_0070KX301_0020 MF EZ302U	66	66	150	14.00	14/1	3500	3000	5500	1.1	5.5	3.5	8.4	5.6
214	27	29	35	1.6	PH331_0070KX301_0020 MF EZ303U	75	77	150	14.00	14/1	3500	3000	5500	1.2	5.5	3.5	8.4	6.1
214	37	40	47	1.2	PH331_0070KX301_0020 MF EZ401U	75	77	150	14.00	14/1	3500	3000	5500	1.7	5.5	3.5	8.4	7.5
300	8.8	9.0	12	4.8	PH331_0050KX301_0020 MF EZ301U	26	26	130	10.00	10/1	3500	3000	5500	1.0	6.0	4.0	6.9	5.0
300	15	16	20	2.8	PH331_0050KX301_0020 MF EZ302U	47	47	130	10.00	10/1	3500	3000	5500	1.1	6.0	4.0	6.9	5.6
300	20	21	27	2.1	PH331_0050KX301_0020 MF EZ303U	62	62	130	10.00	10/1	3500	3000	5500	1.2	6.0	4.0	6.9	6.1
300	26	28	36	1.6	PH331_0050KX301_0020 MF EZ401U	62	62	130	10.00	10/1	3500	3000	5500	1.8	6.0	4.0	6.9	7.5
429	11	11	26	3.7	PH331_0070KX301_0010 MF EZ302U	33	33	150	7.000	7/1	3000	2500	4500	1.3	5.5	3.5	8.4	5.6
429	14	14	33	2.9	PH331_0070KX301_0010 MF EZ303U	46	46	150	7.000	7/1	3000	2500	4500	1.4	5.5	3.5	8.4	6.1
429	19	20	45	2.1	PH331_0070KX301_0010 MF EZ401U	56	56	150	7.000	7/1	3000	2500	4500	2.0	5.5	3.5	8.4	7.5
429	31	34	76	1.3	PH331_0070KX301_0010 MF EZ402U	75	77	150	7.000	7/1	3000	2500	4500	2.7	5.5	3.5	8.4	8.6
600	9.8	10	24	4.0	PH331_0050KX301_0010 MF EZ303U	33	33	115	5.000	5/1	3000	2500	4500	1.5	6.0	4.0	6.9	6.1
600	13	14	32	3.0	PH331_0050KX301_0010 MF EZ401U	40	40	115	5.000	5/1	3000	2500	4500	2.0	6.0	4.0	6.9	7.5
600	22	25	54	1.8	PH331_0050KX301_0010 MF EZ402U	62	62	115	5.000	5/1	3000	2500	4500	2.7	6.0	4.0	6.9	8.6
600	33	41	80	1.2	PH331_0050KX301_0010 MF EZ404U	62	62	115	5.000	5/1	3000	2500	4500	4.1	6.0	4.0	6.9	11
PH331KX (n_{1N} = 6000 min^{-1}, $M_{2acc,max}$ = 75 Nm)																		
200	25	27	33	1.3	PH331_0100KX301_0030 MF EZ301U	60	60	120	30.00	30/1	3500	3500	6000	0.94	5.0	3.0	7.8	5.0
286	18	19	17	2.5	PH331_0070KX301_0030 MF EZ301U	56	56	150	21.00	21/1	3500	3500	6000	0.94	5.5	3.5	8.4	5.0
286	30	33	28	1.5	PH331_0070KX301_0030 MF EZ302U	75	77	150	21.00	21/1	3500	3500	6000	1.0	5.5	3.5	8.4	5.6
286	39	45	36	1.2	PH331_0070KX301_0030 MF EZ303U	75	77	150	21.00	21/1	3500	3500	6000	1.1	5.5	3.5	8.4	6.1
400	13	13	16	2.6	PH331_0050KX301_0030 MF EZ301U	40	40	130	15.00	15/1	3500	3500	6000	0.94	6.0	4.0	6.9	5.0
400	21	24	27	1.6	PH331_0050KX301_0030 MF EZ302U	62	62	130	15.00	15/1	3500	3500	6000	1.0	6.0	4.0	6.9	5.6
400	28	32	35	1.2	PH331_0050KX301_0030 MF EZ303U	62	62	130	15.00	15/1	3500	3500	6000	1.2	6.0	4.0	6.9	6.1
400	33	40	41	1.0	PH331_0050KX301_0030 MF EZ401U	62	62	130	15.00	15/1	3500	3500	6000	1.7	6.0	4.0	6.9	7.5
PH332KX (n_{1N} = 3000 min^{-1}, $M_{2acc,max}$ = 80 Nm)																		
54	48	49	54	1.0	PH332_0280KX301_0020 MF EZ301U	75	75	150	56.00	56/1	3500	3000	5500	1.0	4.5	2.5	12	5.4
60	43	44	49	1.2	PH332_0250KX301_0020 MF EZ301U	80	85	160	50.00	50/1	3500	3000	5500	1.0	4.5	2.5	13	5.4
75	34	35	43	1.3	PH332_0200KX301_0020 MF EZ301U	80	85	160	40.00	40/1	3500	3000	5500	1.0	4.5	2.5	13	5.4
86	30	30	57	1.7	PH332_0350KX301_0010 MF EZ301U	80	85	160	35.00	35/1	3000	2500	4500	1.2	4.5	2.5	13	5.4
PH431KX (n_{1N} = 3000 min^{-1}, $M_{2acc,max}$ = 160 Nm)																		
100	26	27	17	2.8	PH431_0100KX401_0030 MF EZ301U	79	79	230	30.00	30/1	3000	3000	5500	1.6	4.0	2.0	18	9.4
100	45	48	28	1.7	PH431_0100KX401_0030 MF EZ302U	115	115	230	30.00	30/1	3000	3000	5500	1.7	4.0	2.0	18	10
100	59	62	37	1.3	PH431_0100KX401_0030 MF EZ303U	115	115	230	30.00	30/1	3000	3000	5500	1.8	4.0	2.0	18	10
143	18	19	9.7	4.9	PH431_0070KX401_0030 MF EZ301U	56	56	320	21.00	21/1	3000	3000	5500	1.6	4.5	2.5	19	9.4
143	32	33	17	2.9	PH431_0070KX401_0030 MF EZ302U	99	99	320	21.00	21/1	3000	3000	5500	1.7	4.5	2.5	19	10
143	41	43	22	2.2	PH431_0070KX401_0030 MF EZ303U	139	139	320	21.00	21/1	3000	3000	5500	1.9	4.5	2.5	19	10
143	56	60	29	1.6	PH431_0070KX401_0030 MF EZ401U	160	168	320	21.00	21/1	3000	3000	5500	2.4	4.5	2.5	19	12
143	85	93	45	1.1	PH431_0070KX401_0030 MF EZ501U	160	168	320	21.00	21/1	3000	3000	5500	4.4	4.5	2.5	19	13

n_{2N} [rpm]	M_{2N} [Nm]	$M_{2,0}$ [Nm]	a_{th}	S	Type	M_{2acc} [Nm]	M_{2accHT} [Nm]	M_{2NOT} [Nm]	i	i_{exakt}	n_{1maxDB} EL1,2,5,6 [rpm]	n_{1maxDB} EL3,4 [rpm]	n_{1maxZB} [rpm]	J_1 [kgcm²]	$\Delta\varphi_2$ [arcmin]	$\Delta\varphi_{2red}$ [arcmin]	C_2 [Nm/ arcmin]	m [kg]
PH431KX (n_{1N} = 3000 min^{-1}, $M_{2acc,max}$ = 160 Nm)																		
150	18	18	15	4.3	PH431_0100KX401_0020 MF EZ301U	53	53	230	20.00	20/1	2500	2500	5000	1.8	4.0	2.0	18	9.4
150	30	32	26	2.5	PH431_0100KX401_0020 MF EZ302U	95	95	230	20.00	20/1	2500	2500	5000	1.9	4.0	2.0	18	10
150	39	41	34	1.9	PH431_0100KX401_0020 MF EZ303U	115	115	230	20.00	20/1	2500	2500	5000	2.0	4.0	2.0	18	10
150	53	57	45	1.4	PH431_0100KX401_0020 MF EZ401U	115	115	230	20.00	20/1	2500	2500	5000	2.6	4.0	2.0	18	12
200	23	24	13	3.7	PH431_0050KX401_0030 MF EZ302U	71	71	260	15.00	15/1	3000	3000	5500	1.8	5.0	3.0	15	10
200	29	31	17	2.9	PH431_0050KX401_0030 MF EZ303U	99	99	260	15.00	15/1	3000	3000	5500	1.9	5.0	3.0	15	10
200	40	43	22	2.1	PH431_0050KX401_0030 MF EZ401U	120	120	260	15.00	15/1	3000	3000	5500	2.4	5.0	3.0	15	12
200	61	67	34	1.4	PH431_0050KX401_0030 MF EZ501U	120	120	260	15.00	15/1	3000	3000	5500	4.4	5.0	3.0	15	13
200	67	74	38	1.3	PH431_0050KX401_0030 MF EZ402U	120	120	260	15.00	15/1	3000	3000	5500	3.1	5.0	3.0	15	13
214	21	22	15	4.3	PH431_0070KX401_0020 MF EZ302U	66	66	320	14.00	14/1	2500	2500	5000	2.0	4.5	2.5	19	10
214	27	29	20	3.3	PH431_0070KX401_0020 MF EZ303U	93	93	320	14.00	14/1	2500	2500	5000	2.1	4.5	2.5	19	10
214	37	40	26	2.4	PH431_0070KX401_0020 MF EZ401U	113	113	320	14.00	14/1	2500	2500	5000	2.6	4.5	2.5	19	12
214	57	62	41	1.6	PH431_0070KX401_0020 MF EZ501U	160	168	320	14.00	14/1	2500	2500	5000	4.6	4.5	2.5	19	13
214	62	69	44	1.4	PH431_0070KX401_0020 MF EZ402U	160	168	320	14.00	14/1	2500	2500	5000	3.3	4.5	2.5	19	13
250	18	19	13	3.7	PH431_0040KX401_0030 MF EZ302U	57	57	208	12.00	12/1	3000	3000	5500	1.8	5.5	3.5	11	10
250	23	25	17	2.9	PH431_0040KX401_0030 MF EZ303U	79	79	208	12.00	12/1	3000	3000	5500	1.9	5.5	3.5	11	10
250	32	34	22	2.1	PH431_0040KX401_0030 MF EZ401U	96	96	208	12.00	12/1	3000	3000	5500	2.4	5.5	3.5	11	12
250	49	53	34	1.4	PH431_0040KX401_0030 MF EZ501U	96	96	208	12.00	12/1	3000	3000	5500	4.4	5.5	3.5	11	13
250	53	59	38	1.3	PH431_0040KX401_0030 MF EZ402U	96	96	208	12.00	12/1	3000	3000	5500	3.1	5.5	3.5	11	13
300	20	21	15	4.3	PH431_0050KX401_0020 MF EZ303U	66	66	260	10.00	10/1	2500	2500	5000	2.1	5.0	3.0	15	10
300	26	28	20	3.2	PH431_0050KX401_0020 MF EZ401U	80	80	260	10.00	10/1	2500	2500	5000	2.6	5.0	3.0	15	12
300	41	44	31	2.1	PH431_0050KX401_0020 MF EZ501U	120	120	260	10.00	10/1	2500	2500	5000	4.6	5.0	3.0	15	13
300	44	49	34	1.9	PH431_0050KX401_0020 MF EZ402U	120	120	260	10.00	10/1	2500	2500	5000	3.3	5.0	3.0	15	13
300	65	81	50	1.3	PH431_0050KX401_0020 MF EZ404U	120	120	260	10.00	10/1	2500	2500	5000	4.7	5.0	3.0	15	15
300	70	76	54	1.2	PH431_0050KX401_0020 MF EZ502U	120	120	260	10.00	10/1	2500	2500	5000	6.9	5.0	3.0	15	14
300	70	78	54	1.2	PH431_0050KX401_0020 MF EZ701U	120	120	260	10.00	10/1	2500	2500	5000	10	5.0	3.0	15	16
375	16	17	15	4.3	PH431_0040KX401_0020 MF EZ303U	53	53	208	8.000	8/1	2500	2500	5000	2.1	5.5	3.5	11	10
375	21	23	20	3.2	PH431_0040KX401_0020 MF EZ401U	64	64	208	8.000	8/1	2500	2500	5000	2.7	5.5	3.5	11	12
375	33	36	31	2.1	PH431_0040KX401_0020 MF EZ501U	96	96	208	8.000	8/1	2500	2500	5000	4.6	5.5	3.5	11	13
375	36	39	34	1.9	PH431_0040KX401_0020 MF EZ402U	96	96	208	8.000	8/1	2500	2500	5000	3.4	5.5	3.5	11	13
375	52	65	50	1.3	PH431_0040KX401_0020 MF EZ404U	96	96	208	8.000	8/1	2500	2500	5000	4.7	5.5	3.5	11	15
375	56	61	54	1.2	PH431_0040KX401_0020 MF EZ502U	96	96	208	8.000	8/1	2500	2500	5000	6.9	5.5	3.5	11	14
375	56	63	54	1.2	PH431_0040KX401_0020 MF EZ701U	96	96	208	8.000	8/1	2500	2500	5000	10	5.5	3.5	11	16
429	19	20	27	4.0	PH431_0070KX401_0010 MF EZ401U	56	56	320	7.000	7/1	2500	2000	4000	3.4	4.5	2.5	19	12
429	28	31	41	2.6	PH431_0070KX401_0010 MF EZ501U	106	106	320	7.000	7/1	2500	2000	4000	5.4	4.5	2.5	19	13
429	31	34	45	2.4	PH431_0070KX401_0010 MF EZ402U	106	106	320	7.000	7/1	2500	2000	4000	4.1	4.5	2.5	19	13
429	46	57	66	1.6	PH431_0070KX401_0010 MF EZ404U	160	168	320	7.000	7/1	2500	2000	4000	5.5	4.5	2.5	19	15
429	49	53	71	1.5	PH431_0070KX401_0010 MF EZ502U	160	168	320	7.000	7/1	2500	2000	4000	7.7	4.5	2.5	19	14
429	49	55	71	1.5	PH431_0070KX401_0010 MF EZ701U	132	132	320	7.000	7/1	2500	2000	4000	11	4.5	2.5	19	16
429	64	73	93	1.2	PH431_0070KX401_0010 MF EZ503U	160	168	320	7.000	7/1	2500	2000	4000	10	4.5	2.5	19	16
600	20	22	30	3.7	PH431_0050KX401_0010 MF EZ501U	76	76	260	5.000	5/1	2500	2000	4000	5.6	5.0	3.0	15	13
600	22	25	32	3.3	PH431_0050KX401_0010 MF EZ402U	76	76	260	5.000	5/1	2500	2000	4000	4.3	5.0	3.0	15	13
600	33	41	47	2.3	PH431_0050KX401_0010 MF EZ404U	120	120	260	5.000	5/1	2500	2000	4000	5.6	5.0	3.0	15	15
600	35	38	51	2.1	PH431_0050KX401_0010 MF EZ502U	120	120	260	5.000	5/1	2500	2000	4000	7.9	5.0	3.0	15	14
600	35	39	51	2.1	PH431_0050KX401_0010 MF EZ701U	95	95	260	5.000	5/1	2500	2000	4000	11	5.0	3.0	15	16
600	46	52	67	1.6	PH431_0050KX401_0010 MF EZ503U	120	120	260	5.000	5/1	2500	2000	4000	10	5.0	3.0	15	16
600	57	68	83	1.3	PH431_0050KX401_0010 MF EZ702U	120	120	260	5.000	5/1	2500	2000	4000	16	5.0	3.0	15	19
600	64	76	93	1.2	PH431_0050KX401_0010 MF EZ505U	120	120	260	5.000	5/1	2500	2000	4000	15	5.0	3.0	15	19
750	16	18	26	4.1	PH431_0040KX401_0010 MF EZ501U	61	61	208	4.000	4/1	2500	2000	4000	5.8	5.5	3.5	11	13
750	18	20	29	3.8	PH431_0040KX401_0010 MF EZ402U	61	61	208	4.000	4/1	2500	2000	4000	4.5	5.5	3.5	11	13
750	26	33	42	2.6	PH431_0040KX401_0010 MF EZ404U	96	96	208	4.000	4/1	2500	2000	4000	5.8	5.5	3.5	11	15
750	28	30	45	2.4	PH431_0040KX401_0010 MF EZ502U	96	96	208	4.000	4/1	2500	2000	4000	8.1	5.5	3.5	11	14
750	28	31	45	2.4	PH431_0040KX401_0010 MF EZ701U	76	76	208	4.000	4/1	2500	2000	4000	11	5.5	3.5	11	16
750	37	42	59	1.8	PH431_0040KX401_0010 MF EZ503U	96	96	208	4.000	4/1	2500	2000	4000	10	5.5	3.5	11	16
750	45	54	73	1.5	PH431_0040KX401_0010 MF EZ702U	96	96	208	4.000	4/1	2500	2000	4000	17	5.5	3.5	11	19
750	51	61	82	1.3	PH431_0040KX401_0010 MF EZ505U	96	96	208	4.000	4/1	2500	2000	4000	15	5.5	3.5	11	19
750	62	79	100	1.1	PH431_0040KX401_0010 MF EZ703U	96	96	208	4.000	4/1	2500	2000	4000	24	5.5	3.5	11	21
PH432KX (n_{1N} = 3000 min^{-1}, $M_{2acc,max}$ = 160 Nm)																		
21	119	122	57	1.0	PH432_0700KX301_0020 MF EZ301U	158	164	316	140.0	140/1	3500	3000	5500	1.0	3.0	1.0	27	8.0
25	102	104	39	1.1	PH432_0400KX301_0030 MF EZ301U	155	169	310	120.0	120/1	3500	3500	6000	0.95	3.5	1.5	29	8.0
29	89	91	34	1.2	PH432_0350KX301_0030 MF EZ301U	160	174	320	105.0	105/1	3500	3500	6000	0.94	3.5	1.5	30	8.0
30	85	87	41	1.4	PH432_0500KX301_0020 MF EZ301U	159	174	318	100.0	100/1	3500	3000	5500	1.0	3.0	1.0	30	8.0
36	72	73	32	1.3	PH432_0280KX301_0030 MF EZ301U	160	173	312	84.00	84/1	3500	3500	6000	0.95	3.5	1.5	29	8.0
38	68	70	35	1.6	PH432_0400KX301_0020 MF EZ301U	155	169	310	80.00	80/1	3500	3000	5500	1.0	3.5	1.5	29	8.0

n_{2N} [rpm]	M_{2N} [Nm]	$M_{2,0}$ [Nm]	a_{th}	S	Type	M_{2acc} [Nm]	M_{2accHT} [Nm]	M_{2NOT} [Nm]	i	i_{exakt}	n_{1maxDB} EL1,2,5,6 [rpm]	n_{1maxDB} EL3,4 [rpm]	n_{1maxZB} [rpm]	J_1 [kgcm²]	$\Delta\varphi_2$ [arcmin]	$\Delta\varphi_{2red}$ [arcmin]	C_2 [Nm/arcmin]	m [kg]
PH432KX (n_{1N} = 3000 min^{-1}, $M_{2acc,max}$ = 160 Nm)																		
40	64	65	27	1.6	PH432_0250KX301_0030 MF EZ301U	161	174	322	75.00	75/1	3500	3500	6000	0.94	3.5	1.5	29	8.0
43	60	61	31	1.8	PH432_0350KX301_0020 MF EZ301U	160	174	320	70.00	70/1	3500	3000	5500	1.0	3.5	1.5	30	8.0
43	102	108	53	1.1	PH432_0350KX301_0020 MF EZ302U	160	174	320	70.00	70/1	3500	3000	5500	1.1	3.5	1.5	30	8.6
50	51	52	23	1.9	PH432_0200KX301_0030 MF EZ301U	150	150	299	60.00	60/1	3500	3500	6000	0.94	3.5	1.5	27	8.0
50	87	92	39	1.1	PH432_0200KX301_0030 MF EZ302U	150	150	299	60.00	60/1	3500	3500	6000	1.0	3.5	1.5	27	8.6
54	48	49	29	2.0	PH432_0280KX301_0020 MF EZ301U	144	144	312	56.00	56/1	3500	3000	5500	1.0	3.5	1.5	29	8.0
54	82	86	49	1.2	PH432_0280KX301_0020 MF EZ302U	160	173	312	56.00	56/1	3500	3000	5500	1.1	3.5	1.5	29	8.6
60	43	44	24	2.3	PH432_0250KX301_0020 MF EZ301U	128	128	322	50.00	50/1	3500	3000	5500	1.0	3.5	1.5	29	8.0
60	73	77	42	1.4	PH432_0250KX301_0020 MF EZ302U	161	174	322	50.00	50/1	3500	3000	5500	1.1	3.5	1.5	29	8.6
60	95	100	54	1.1	PH432_0250KX301_0020 MF EZ303U	161	174	322	50.00	50/1	3500	3000	5500	1.2	3.5	1.5	29	9.1
63	41	42	19	2.2	PH432_0160KX301_0030 MF EZ301U	123	123	312	48.00	48/1	3500	3500	6000	0.95	3.5	1.5	25	8.0
63	70	74	33	1.3	PH432_0160KX301_0030 MF EZ302U	160	173	312	48.00	48/1	3500	3500	6000	1.0	3.5	1.5	25	8.6
75	34	35	20	2.8	PH432_0200KX301_0020 MF EZ301U	103	103	299	40.00	40/1	3500	3000	5500	1.0	3.5	1.5	27	8.0
75	58	62	35	1.6	PH432_0200KX301_0020 MF EZ302U	150	150	299	40.00	40/1	3500	3000	5500	1.1	3.5	1.5	27	8.6
75	76	80	46	1.3	PH432_0200KX301_0020 MF EZ303U	150	150	299	40.00	40/1	3500	3000	5500	1.2	3.5	1.5	27	9.1
86	30	30	27	3.6	PH432_0350KX301_0010 MF EZ301U	90	90	320	35.00	35/1	3000	2500	4500	1.3	3.5	1.5	30	8.0
86	51	54	46	2.1	PH432_0350KX301_0010 MF EZ302U	160	160	320	35.00	35/1	3000	2500	4500	1.4	3.5	1.5	30	8.6
86	66	70	60	1.6	PH432_0350KX301_0010 MF EZ303U	160	174	320	35.00	35/1	3000	2500	4500	1.5	3.5	1.5	30	9.1
86	90	96	81	1.2	PH432_0350KX301_0010 MF EZ401U	160	174	320	35.00	35/1	3000	2500	4500	2.0	3.5	1.5	30	10
94	27	28	17	3.3	PH432_0160KX301_0020 MF EZ301U	82	82	312	32.00	32/1	3500	3000	5500	1.0	3.5	1.5	25	8.0
94	47	49	30	1.9	PH432_0160KX301_0020 MF EZ302U	147	147	312	32.00	32/1	3500	3000	5500	1.1	3.5	1.5	25	8.6
94	61	64	38	1.5	PH432_0160KX301_0020 MF EZ303U	160	173	312	32.00	32/1	3500	3000	5500	1.2	3.5	1.5	25	9.1
94	82	88	52	1.1	PH432_0160KX301_0020 MF EZ401U	160	173	312	32.00	32/1	3500	3000	5500	1.8	3.5	1.5	25	10
PH432KX (n_{1N} = 6000 min^{-1}, $M_{2acc,max}$ = 160 Nm)																		
50	98	104	37	1.1	PH432_0400KX301_0030 MF EZ301U	155	169	310	120.0	120/1	3500	3500	6000	0.95	3.5	1.5	29	8.0
57	86	91	33	1.3	PH432_0350KX301_0030 MF EZ301U	160	174	320	105.0	105/1	3500	3500	6000	0.94	3.5	1.5	30	8.0
71	68	73	30	1.4	PH432_0280KX301_0030 MF EZ301U	160	173	312	84.00	84/1	3500	3500	6000	0.95	3.5	1.5	29	8.0
80	61	65	26	1.6	PH432_0250KX301_0030 MF EZ301U	161	174	322	75.00	75/1	3500	3500	6000	0.94	3.5	1.5	29	8.0
100	49	52	22	1.9	PH432_0200KX301_0030 MF EZ301U	150	150	299	60.00	60/1	3500	3500	6000	0.94	3.5	1.5	27	8.0
100	82	92	37	1.2	PH432_0200KX301_0030 MF EZ302U	150	150	299	60.00	60/1	3500	3500	6000	1.0	3.5	1.5	27	8.6
125	39	42	18	2.3	PH432_0160KX301_0030 MF EZ301U	123	123	312	48.00	48/1	3500	3500	6000	0.95	3.5	1.5	25	8.0
125	66	74	31	1.4	PH432_0160KX301_0030 MF EZ302U	160	173	312	48.00	48/1	3500	3500	6000	1.0	3.5	1.5	25	8.6
125	86	99	40	1.0	PH432_0160KX301_0030 MF EZ303U	160	173	312	48.00	48/1	3500	3500	6000	1.2	3.5	1.5	25	9.1
PH531KX (n_{1N} = 3000 min^{-1}, $M_{2acc,max}$ = 370 Nm)																		
100	79	85	23	2.3	PH531_0100KX501_0030 MF EZ401U	241	241	575	30.00	30/1	3000	3000	5000	5.7	4.0	2.0	44	18
100	122	133	36	1.5	PH531_0100KX501_0030 MF EZ501U	288	288	575	30.00	30/1	3000	3000	5000	7.7	4.0	2.0	44	19
100	133	148	39	1.4	PH531_0100KX501_0030 MF EZ402U	288	288	575	30.00	30/1	3000	3000	5000	6.4	4.0	2.0	44	19
143	56	60	14	3.8	PH531_0070KX501_0030 MF EZ401U	169	169	705	21.00	21/1	3000	3000	5000	5.8	4.5	2.5	46	18
143	85	93	21	2.5	PH531_0070KX501_0030 MF EZ501U	318	318	705	21.00	21/1	3000	3000	5000	7.7	4.5	2.5	46	19
143	93	103	23	2.3	PH531_0070KX501_0030 MF EZ402U	318	318	705	21.00	21/1	3000	3000	5000	6.5	4.5	2.5	46	19
143	137	171	34	1.5	PH531_0070KX501_0030 MF EZ404U	370	387	705	21.00	21/1	3000	3000	5000	7.8	4.5	2.5	46	21
143	147	159	37	1.4	PH531_0070KX501_0030 MF EZ502U	370	387	705	21.00	21/1	3000	3000	5000	10	4.5	2.5	46	20
143	147	165	37	1.4	PH531_0070KX501_0030 MF EZ701U	370	387	705	21.00	21/1	3000	3000	5000	13	4.5	2.5	46	22
143	193	220	48	1.1	PH531_0070KX501_0030 MF EZ503U	370	387	705	21.00	21/1	3000	3000	5000	12	4.5	2.5	46	22
150	53	57	21	3.4	PH531_0100KX501_0020 MF EZ401U	161	161	575	20.00	20/1	2500	2500	4500	6.3	4.0	2.0	44	18
150	81	89	32	2.2	PH531_0100KX501_0020 MF EZ501U	288	288	575	20.00	20/1	2500	2500	4500	8.2	4.0	2.0	44	19
150	89	98	35	2.0	PH531_0100KX501_0020 MF EZ402U	288	288	575	20.00	20/1	2500	2500	4500	7.0	4.0	2.0	44	19
150	130	163	52	1.4	PH531_0100KX501_0020 MF EZ404U	288	288	575	20.00	20/1	2500	2500	4500	8.3	4.0	2.0	44	21
150	140	151	55	1.3	PH531_0100KX501_0020 MF EZ502U	288	288	575	20.00	20/1	2500	2500	4500	11	4.0	2.0	44	20
150	140	157	55	1.3	PH531_0100KX501_0020 MF EZ701U	288	288	575	20.00	20/1	2500	2500	4500	14	4.0	2.0	44	22
200	61	67	15	3.4	PH531_0050KX501_0030 MF EZ501U	227	227	651	15.00	15/1	3000	3000	5000	7.8	5.0	3.0	37	19
200	67	74	17	3.1	PH531_0050KX501_0030 MF EZ402U	227	227	651	15.00	15/1	3000	3000	5000	6.5	5.0	3.0	37	19
200	98	122	25	2.1	PH531_0050KX501_0030 MF EZ404U	302	302	651	15.00	15/1	3000	3000	5000	7.9	5.0	3.0	37	21
200	105	113	26	2.0	PH531_0050KX501_0030 MF EZ502U	302	302	651	15.00	15/1	3000	3000	5000	10	5.0	3.0	37	20
200	105	118	26	2.0	PH531_0050KX501_0030 MF EZ701U	284	284	651	15.00	15/1	3000	3000	5000	13	5.0	3.0	37	22
200	138	157	35	1.5	PH531_0050KX501_0030 MF EZ503U	302	302	651	15.00	15/1	3000	3000	5000	12	5.0	3.0	37	22
200	170	204	43	1.2	PH531_0050KX501_0030 MF EZ702U	302	302	651	15.00	15/1	3000	3000	5000	19	5.0	3.0	37	24
200	191	227	48	1.1	PH531_0050KX501_0030 MF EZ505U	302	302	651	15.00	15/1	3000	3000	5000	17	5.0	3.0	37	24
214	57	62	19	3.7	PH531_0070KX501_0020 MF EZ501U	212	212	705	14.00	14/1	2500	2500	4500	8.3	4.5	2.5	46	19
214	62	69	21	3.4	PH531_0070KX501_0020 MF EZ402U	212	212	705	14.00	14/1	2500	2500	4500	7.0	4.5	2.5	46	19
214	91	114	31	2.3	PH531_0070KX501_0020 MF EZ404U	370	384	705	14.00	14/1	2500	2500	4500	8.4	4.5	2.5	46	21
214	98	106	33	2.1	PH531_0070KX501_0020 MF EZ502U	370	387	705	14.00	14/1	2500	2500	4500	11	4.5	2.5	46	20
214	98	110	33	2.1	PH531_0070KX501_0020 MF EZ701U	265	265	705	14.00	14/1	2500	2500	4500	14	4.5	2.5	46	22
214	128	147	44	1.6	PH531_0070KX501_0020 MF EZ503U	370	387	705	14.00	14/1	2500	2500	4500	13	4.5	2.5	46	22

n_{2N} [rpm]	M_{2N} [Nm]	$M_{2,0}$ [Nm]	a_{th}	S	Type	M_{2acc} [Nm]	M_{2accHT} [Nm]	M_{2NOT} [Nm]	i	i_{exakt}	n_{1maxDB} EL1,2,5,6 [rpm]	n_{1maxDB} EL3,4 [rpm]	n_{1maxZB} [rpm]	J_1 [kgcm²]	$\Delta\varphi_2$ [arcmin]	$\Delta\varphi_{2red}$ [arcmin]	C_2 [Nm/ arcmin]	m [kg]
PH531KX (n_{1N} = 3000 min^{-1}, $M_{2acc,max}$ = 370 Nm)																		
214	159	191	54	1.3	PH531_0070KX501_0020 MF EZ702U	370	387	705	14.00	14/1	2500	2500	4500	19	4.5	2.5	46	24
214	179	212	61	1.2	PH531_0070KX501_0020 MF EZ505U	370	387	705	14.00	14/1	2500	2500	4500	18	4.5	2.5	46	24
250	49	53	15	3.4	PH531_0040KX501_0030 MF EZ501U	182	182	521	12.00	12/1	3000	3000	5000	7.9	5.5	3.5	28	19
250	53	59	17	3.1	PH531_0040KX501_0030 MF EZ402U	182	182	521	12.00	12/1	3000	3000	5000	6.6	5.5	3.5	28	19
250	78	98	25	2.1	PH531_0040KX501_0030 MF EZ404U	242	242	521	12.00	12/1	3000	3000	5000	7.9	5.5	3.5	28	21
250	84	91	26	2.0	PH531_0040KX501_0030 MF EZ502U	242	242	521	12.00	12/1	3000	3000	5000	10	5.5	3.5	28	20
250	84	94	26	2.0	PH531_0040KX501_0030 MF EZ701U	227	227	521	12.00	12/1	3000	3000	5000	13	5.5	3.5	28	22
250	110	126	35	1.5	PH531_0040KX501_0030 MF EZ503U	242	242	521	12.00	12/1	3000	3000	5000	13	5.5	3.5	28	22
250	136	163	43	1.2	PH531_0040KX501_0030 MF EZ702U	242	242	521	12.00	12/1	3000	3000	5000	19	5.5	3.5	28	24
250	153	182	48	1.1	PH531_0040KX501_0030 MF EZ505U	242	242	521	12.00	12/1	3000	3000	5000	17	5.5	3.5	28	24
300	44	49	15	4.7	PH531_0050KX501_0020 MF EZ402U	151	151	651	10.00	10/1	2500	2500	4500	7.2	5.0	3.0	37	19
300	65	81	22	3.2	PH531_0050KX501_0020 MF EZ404U	274	274	651	10.00	10/1	2500	2500	4500	8.5	5.0	3.0	37	21
300	70	76	24	3.0	PH531_0050KX501_0020 MF EZ502U	293	293	651	10.00	10/1	2500	2500	4500	11	5.0	3.0	37	20
300	70	78	24	3.0	PH531_0050KX501_0020 MF EZ701U	189	189	651	10.00	10/1	2500	2500	4500	14	5.0	3.0	37	22
300	92	105	31	2.3	PH531_0050KX501_0020 MF EZ503U	302	302	651	10.00	10/1	2500	2500	4500	13	5.0	3.0	37	22
300	113	136	39	1.8	PH531_0050KX501_0020 MF EZ702U	302	302	651	10.00	10/1	2500	2500	4500	19	5.0	3.0	37	24
300	128	151	43	1.6	PH531_0050KX501_0020 MF EZ505U	302	302	651	10.00	10/1	2500	2500	4500	18	5.0	3.0	37	24
300	156	197	53	1.3	PH531_0050KX501_0020 MF EZ703U	302	302	651	10.00	10/1	2500	2500	4500	27	5.0	3.0	37	26
300	201	286	69	1.0	PH531_0050KX501_0020 MF EZ705U	302	302	651	10.00	10/1	2500	2500	4500	40	5.0	3.0	37	32
375	36	39	15	4.7	PH531_0040KX501_0020 MF EZ402U	121	121	521	8.000	8/1	2500	2500	4500	7.3	5.5	3.5	28	19
375	52	65	22	3.2	PH531_0040KX501_0020 MF EZ404U	219	219	521	8.000	8/1	2500	2500	4500	8.7	5.5	3.5	28	21
375	56	61	24	3.0	PH531_0040KX501_0020 MF EZ502U	235	235	521	8.000	8/1	2500	2500	4500	11	5.5	3.5	28	20
375	56	63	24	3.0	PH531_0040KX501_0020 MF EZ701U	151	151	521	8.000	8/1	2500	2500	4500	14	5.5	3.5	28	22
375	73	84	31	2.3	PH531_0040KX501_0020 MF EZ503U	242	242	521	8.000	8/1	2500	2500	4500	13	5.5	3.5	28	22
375	91	109	39	1.8	PH531_0040KX501_0020 MF EZ702U	242	242	521	8.000	8/1	2500	2500	4500	19	5.5	3.5	28	24
375	102	121	43	1.6	PH531_0040KX501_0020 MF EZ505U	242	242	521	8.000	8/1	2500	2500	4500	18	5.5	3.5	28	24
375	125	157	53	1.3	PH531_0040KX501_0020 MF EZ703U	242	242	521	8.000	8/1	2500	2500	4500	27	5.5	3.5	28	26
375	161	228	69	1.0	PH531_0040KX501_0020 MF EZ705U	242	242	521	8.000	8/1	2500	2500	4500	40	5.5	3.5	28	32
429	46	57	30	4.0	PH531_0070KX501_0010 MF EZ404U	192	192	705	7.000	7/1	2500	2000	3500	11	4.5	2.5	46	21
429	49	53	32	3.7	PH531_0070KX501_0010 MF EZ502U	205	205	705	7.000	7/1	2500	2000	3500	13	4.5	2.5	46	20
429	49	55	32	3.7	PH531_0070KX501_0010 MF EZ701U	132	132	705	7.000	7/1	2500	2000	3500	17	4.5	2.5	46	22
429	64	73	42	2.9	PH531_0070KX501_0010 MF EZ503U	285	285	705	7.000	7/1	2500	2000	3500	16	4.5	2.5	46	22
429	79	95	52	2.3	PH531_0070KX501_0010 MF EZ702U	271	271	705	7.000	7/1	2500	2000	3500	22	4.5	2.5	46	24
429	89	106	58	2.1	PH531_0070KX501_0010 MF EZ505U	370	387	705	7.000	7/1	2500	2000	3500	20	4.5	2.5	46	24
429	109	138	71	1.7	PH531_0070KX501_0010 MF EZ703U	370	387	705	7.000	7/1	2500	2000	3500	30	4.5	2.5	46	26
429	141	200	92	1.3	PH531_0070KX501_0010 MF EZ705U	370	387	705	7.000	7/1	2500	2000	3500	42	4.5	2.5	46	32
600	46	52	30	4.0	PH531_0050KX501_0010 MF EZ503U	203	203	651	5.000	5/1	2500	2000	3500	16	5.0	3.0	37	22
600	57	68	37	3.2	PH531_0050KX501_0010 MF EZ702U	194	194	651	5.000	5/1	2500	2000	3500	22	5.0	3.0	37	24
600	64	76	42	2.9	PH531_0050KX501_0010 MF EZ505U	302	302	651	5.000	5/1	2500	2000	3500	21	5.0	3.0	37	24
600	78	98	51	2.4	PH531_0050KX501_0010 MF EZ703U	302	302	651	5.000	5/1	2500	2000	3500	30	5.0	3.0	37	26
600	101	143	66	1.8	PH531_0050KX501_0010 MF EZ705U	302	302	651	5.000	5/1	2500	2000	3500	42	5.0	3.0	37	32
750	37	42	26	4.6	PH531_0040KX501_0010 MF EZ503U	163	163	521	4.000	4/1	2500	2000	3500	17	5.5	3.5	28	22
750	45	54	32	3.7	PH531_0040KX501_0010 MF EZ702U	155	155	521	4.000	4/1	2500	2000	3500	23	5.5	3.5	28	24
750	51	61	37	3.3	PH531_0040KX501_0010 MF EZ505U	242	242	521	4.000	4/1	2500	2000	3500	21	5.5	3.5	28	24
750	62	79	45	2.7	PH531_0040KX501_0010 MF EZ703U	242	242	521	4.000	4/1	2500	2000	3500	31	5.5	3.5	28	26
750	81	114	58	2.1	PH531_0040KX501_0010 MF EZ705U	242	242	521	4.000	4/1	2500	2000	3500	43	5.5	3.5	28	32
PH531KX (n_{1N} = 4500 min^{-1}, $M_{2acc,max}$ = 370 Nm)																		
214	189	304	47	1.1	PH531_0070KX501_0030 MF EZ505U	370	387	705	21.00	21/1	3000	3000	5000	17	4.5	2.5	46	24
300	135	217	39	1.4	PH531_0050KX501_0030 MF EZ505U	302	302	651	15.00	15/1	3000	3000	5000	17	5.0	3.0	37	24
300	172	284	49	1.1	PH531_0050KX501_0030 MF EZ703U	302	302	651	15.00	15/1	3000	3000	5000	27	5.0	3.0	37	26
321	126	203	44	1.6	PH531_0070KX501_0020 MF EZ505U	370	387	705	14.00	14/1	2500	2500	4500	18	4.5	2.5	46	24
321	160	265	57	1.3	PH531_0070KX501_0020 MF EZ703U	370	387	705	14.00	14/1	2500	2500	4500	27	4.5	2.5	46	26
375	108	174	39	1.4	PH531_0040KX501_0030 MF EZ505U	242	242	521	12.00	12/1	3000	3000	5000	17	5.5	3.5	28	24
375	137	227	49	1.1	PH531_0040KX501_0030 MF EZ703U	242	242	521	12.00	12/1	3000	3000	5000	27	5.5	3.5	28	26
450	90	145	35	2.0	PH531_0050KX501_0020 MF EZ505U	302	302	651	10.00	10/1	2500	2500	4500	18	5.0	3.0	37	24
450	114	189	45	1.6	PH531_0050KX501_0020 MF EZ703U	302	302	651	10.00	10/1	2500	2500	4500	27	5.0	3.0	37	26
450	155	284	60	1.2	PH531_0050KX501_0020 MF EZ705U	302	302	651	10.00	10/1	2500	2500	4500	40	5.0	3.0	37	32
563	72	116	35	2.0	PH531_0040KX501_0020 MF EZ505U	242	242	521	8.000	8/1	2500	2500	4500	18	5.5	3.5	28	24
563	92	151	45	1.6	PH531_0040KX501_0020 MF EZ703U	242	242	521	8.000	8/1	2500	2500	4500	27	5.5	3.5	28	26
563	124	227	60	1.2	PH531_0040KX501_0020 MF EZ705U	242	242	521	8.000	8/1	2500	2500	4500	40	5.5	3.5	28	32
PH532KX (n_{1N} = 3000 min^{-1}, $M_{2acc,max}$ = 390 Nm)																		
14	179	183	30	1.6	PH532_0700KX401_0030 MF EZ301U	370	387	705	210.0	210/1	3000	3000	5500	1.6	3.0	1.0	69	13
15	170	174	49	1.3	PH532_1000KX401_0020 MF EZ301U	288	288	575	200.0	200/1	2500	2500	5000	1.8	3.0	1.0	52	13
20	128	131	20	2.3	PH532_0500KX401_0030 MF EZ301U	385	385	705	150.0	150/1	3000	3000	5500	1.6	3.0	1.0	77	13

n_{2N} [rpm]	M_{2N} [Nm]	$M_{2,0}$ [Nm]	a_{th}	S	Type	M_{2acc} [Nm]	M_{2accHT} [Nm]	M_{2NOT} [Nm]	i	i_{exakt}	n_{1maxDB} EL1,2,5,6 [rpm]	n_{1maxDB} EL3,4 [rpm]	n_{1maxZB} [rpm]	J_1 [kgcm²]	$\Delta\varphi_2$ [arcmin]	$\Delta\varphi_{2red}$ [arcmin]	C_2 [Nm/ arcmin]	m [kg]
PH532KX (n_{1N} = 3000 min^{-1}, $M_{2acc,max}$ = 390 Nm)																		
20	218	231	35	1.4	PH532_0500KX401_0030 MF EZ302U	385	400	705	150.0	150/1	3000	3000	5500	1.7	3.0	1.0	77	14
20	284	301	46	1.0	PH532_0500KX401_0030 MF EZ303U	385	400	705	150.0	150/1	3000	3000	5500	1.8	3.0	1.0	77	14
21	119	122	27	2.4	PH532_0700KX401_0020 MF EZ301U	359	359	705	140.0	140/1	2500	2500	5000	1.8	3.0	1.0	69	13
21	204	215	46	1.4	PH532_0700KX401_0020 MF EZ302U	370	387	705	140.0	140/1	2500	2500	5000	1.9	3.0	1.0	69	14
21	265	281	60	1.1	PH532_0700KX401_0020 MF EZ303U	370	387	705	140.0	140/1	2500	2500	5000	2.0	3.0	1.0	69	14
25	102	104	19	2.5	PH532_0400KX401_0030 MF EZ301U	308	308	696	120.0	120/1	3000	3000	5500	1.6	3.5	1.5	71	13
25	175	185	32	1.5	PH532_0400KX401_0030 MF EZ302U	355	356	696	120.0	120/1	3000	3000	5500	1.7	3.5	1.5	71	14
25	228	241	41	1.1	PH532_0400KX401_0030 MF EZ303U	355	356	696	120.0	120/1	3000	3000	5500	1.9	3.5	1.5	71	14
29	89	91	15	3.2	PH532_0350KX401_0030 MF EZ301U	269	269	705	105.0	105/1	3000	3000	5500	1.6	3.5	1.5	78	13
29	153	162	25	1.9	PH532_0350KX401_0030 MF EZ302U	385	400	705	105.0	105/1	3000	3000	5500	1.7	3.5	1.5	78	14
29	199	211	33	1.5	PH532_0350KX401_0030 MF EZ303U	385	400	705	105.0	105/1	3000	3000	5500	1.8	3.5	1.5	78	14
29	269	289	44	1.1	PH532_0350KX401_0030 MF EZ401U	385	400	705	105.0	105/1	3000	3000	5500	2.4	3.5	1.5	78	16
30	85	87	18	3.5	PH532_0500KX401_0020 MF EZ301U	256	256	705	100.0	100/1	2500	2500	5000	1.8	3.0	1.0	77	13
30	146	154	32	2.0	PH532_0500KX401_0020 MF EZ302U	385	400	705	100.0	100/1	2500	2500	5000	1.9	3.0	1.0	77	14
30	190	201	41	1.6	PH532_0500KX401_0020 MF EZ303U	385	400	705	100.0	100/1	2500	2500	5000	2.1	3.0	1.0	77	14
30	256	275	56	1.2	PH532_0500KX401_0020 MF EZ401U	385	400	705	100.0	100/1	2500	2500	5000	2.6	3.0	1.0	77	16
36	72	73	14	3.4	PH532_0280KX401_0030 MF EZ301U	215	215	696	84.00	84/1	3000	3000	5500	1.7	3.5	1.5	72	13
36	122	129	24	2.0	PH532_0280KX401_0030 MF EZ302U	355	385	696	84.00	84/1	3000	3000	5500	1.8	3.5	1.5	72	14
36	159	169	31	1.5	PH532_0280KX401_0030 MF EZ303U	355	387	696	84.00	84/1	3000	3000	5500	1.9	3.5	1.5	72	14
36	215	231	43	1.1	PH532_0280KX401_0030 MF EZ401U	355	387	696	84.00	84/1	3000	3000	5500	2.4	3.5	1.5	72	16
38	68	70	17	3.8	PH532_0400KX401_0020 MF EZ301U	205	205	696	80.00	80/1	2500	2500	5000	1.9	3.5	1.5	71	13
38	117	123	29	2.2	PH532_0400KX401_0020 MF EZ302U	355	356	696	80.00	80/1	2500	2500	5000	2.0	3.5	1.5	71	14
38	152	160	37	1.7	PH532_0400KX401_0020 MF EZ303U	355	356	696	80.00	80/1	2500	2500	5000	2.1	3.5	1.5	71	14
38	205	220	51	1.3	PH532_0400KX401_0020 MF EZ401U	355	356	696	80.00	80/1	2500	2500	5000	2.6	3.5	1.5	71	16
40	64	65	12	4.1	PH532_0250KX401_0030 MF EZ301U	192	192	705	75.00	75/1	3000	3000	5500	1.6	3.5	1.5	75	13
40	109	115	20	2.4	PH532_0250KX401_0030 MF EZ302U	344	344	705	75.00	75/1	3000	3000	5500	1.7	3.5	1.5	75	14
40	142	150	26	1.8	PH532_0250KX401_0030 MF EZ303U	385	400	705	75.00	75/1	3000	3000	5500	1.9	3.5	1.5	75	14
40	192	206	35	1.4	PH532_0250KX401_0030 MF EZ401U	385	400	705	75.00	75/1	3000	3000	5500	2.4	3.5	1.5	75	16
43	60	61	13	4.9	PH532_0350KX401_0020 MF EZ301U	180	180	705	70.00	70/1	2500	2500	5000	1.9	3.5	1.5	78	13
43	102	108	23	2.8	PH532_0350KX401_0020 MF EZ302U	321	321	705	70.00	70/1	2500	2500	5000	2.0	3.5	1.5	78	14
43	133	140	29	2.2	PH532_0350KX401_0020 MF EZ303U	385	400	705	70.00	70/1	2500	2500	5000	2.1	3.5	1.5	78	14
43	180	192	40	1.6	PH532_0350KX401_0020 MF EZ401U	385	400	705	70.00	70/1	2500	2500	5000	2.6	3.5	1.5	78	16
43	276	301	61	1.1	PH532_0350KX401_0020 MF EZ501U	385	400	705	70.00	70/1	2500	2500	5000	4.6	3.5	1.5	78	17
50	51	52	9.7	4.9	PH532_0200KX401_0030 MF EZ301U	154	154	705	60.00	60/1	3000	3000	5500	1.6	3.5	1.5	71	13
50	87	92	17	2.9	PH532_0200KX401_0030 MF EZ302U	275	275	705	60.00	60/1	3000	3000	5500	1.7	3.5	1.5	71	14
50	114	120	22	2.2	PH532_0200KX401_0030 MF EZ303U	370	385	705	60.00	60/1	3000	3000	5500	1.9	3.5	1.5	71	14
50	154	165	29	1.6	PH532_0200KX401_0030 MF EZ401U	370	387	705	60.00	60/1	3000	3000	5500	2.4	3.5	1.5	71	16
50	236	258	45	1.1	PH532_0200KX401_0030 MF EZ501U	370	387	705	60.00	60/1	3000	3000	5500	4.4	3.5	1.5	71	17
54	82	86	22	2.9	PH532_0280KX401_0020 MF EZ302U	256	256	696	56.00	56/1	2500	2500	5000	2.0	3.5	1.5	72	14
54	106	112	28	2.3	PH532_0280KX401_0020 MF EZ303U	355	359	696	56.00	56/1	2500	2500	5000	2.1	3.5	1.5	72	14
54	144	154	38	1.7	PH532_0280KX401_0020 MF EZ401U	355	387	696	56.00	56/1	2500	2500	5000	2.6	3.5	1.5	72	16
54	221	241	59	1.1	PH532_0280KX401_0020 MF EZ501U	355	387	696	56.00	56/1	2500	2500	5000	4.6	3.5	1.5	72	17
60	73	77	18	3.6	PH532_0250KX401_0020 MF EZ302U	229	229	705	50.00	50/1	2500	2500	5000	2.0	3.5	1.5	75	14
60	95	100	23	2.7	PH532_0250KX401_0020 MF EZ303U	321	321	705	50.00	50/1	2500	2500	5000	2.1	3.5	1.5	75	14
60	128	137	32	2.0	PH532_0250KX401_0020 MF EZ401U	385	389	705	50.00	50/1	2500	2500	5000	2.6	3.5	1.5	75	16
60	197	215	49	1.3	PH532_0250KX401_0020 MF EZ501U	385	400	705	50.00	50/1	2500	2500	5000	4.6	3.5	1.5	75	17
60	215	238	53	1.2	PH532_0250KX401_0020 MF EZ402U	385	400	705	50.00	50/1	2500	2500	5000	3.3	3.5	1.5	75	17
63	70	74	14	3.3	PH532_0160KX401_0030 MF EZ302U	220	220	696	48.00	48/1	3000	3000	5500	1.8	3.5	1.5	63	14
63	91	96	19	2.5	PH532_0160KX401_0030 MF EZ303U	308	308	696	48.00	48/1	3000	3000	5500	1.9	3.5	1.5	63	14
63	123	132	25	1.9	PH532_0160KX401_0030 MF EZ401U	355	355	696	48.00	48/1	3000	3000	5500	2.4	3.5	1.5	63	16
63	189	207	39	1.2	PH532_0160KX401_0030 MF EZ501U	355	355	696	48.00	48/1	3000	3000	5500	4.4	3.5	1.5	63	17
63	207	229	43	1.1	PH532_0160KX401_0030 MF EZ402U	355	355	696	48.00	48/1	3000	3000	5500	3.1	3.5	1.5	63	17
75	58	62	15	4.3	PH532_0200KX401_0020 MF EZ302U	183	183	705	40.00	40/1	2500	2500	5000	2.0	3.5	1.5	71	14
75	76	80	19	3.3	PH532_0200KX401_0020 MF EZ303U	256	256	705	40.00	40/1	2500	2500	5000	2.1	3.5	1.5	71	14
75	103	110	26	2.4	PH532_0200KX401_0020 MF EZ401U	311	311	705	40.00	40/1	2500	2500	5000	2.6	3.5	1.5	71	16
75	158	172	40	1.6	PH532_0200KX401_0020 MF EZ501U	370	387	705	40.00	40/1	2500	2500	5000	4.6	3.5	1.5	71	17
75	172	191	44	1.5	PH532_0200KX401_0020 MF EZ402U	370	387	705	40.00	40/1	2500	2500	5000	3.3	3.5	1.5	71	17
86	66	70	27	4.0	PH532_0350KX401_0010 MF EZ303U	224	224	705	35.00	35/1	2500	2000	4000	2.9	3.5	1.5	78	14
86	90	96	37	2.9	PH532_0350KX401_0010 MF EZ401U	273	273	705	35.00	35/1	2500	2000	4000	3.4	3.5	1.5	78	16
86	138	151	56	1.9	PH532_0350KX401_0010 MF EZ501U	385	400	705	35.00	35/1	2500	2000	4000	5.4	3.5	1.5	78	17
86	151	167	62	1.8	PH532_0350KX401_0010 MF EZ402U	385	400	705	35.00	35/1	2500	2000	4000	4.1	3.5	1.5	78	17
86	221	276	90	1.2	PH532_0350KX401_0010 MF EZ404U	385	400	705	35.00	35/1	2500	2000	4000	5.5	3.5	1.5	78	19
86	237	256	97	1.1	PH532_0350KX401_0010 MF EZ502U	385	400	705	35.00	35/1	2500	2000	4000	7.7	3.5	1.5	78	18
86	237	266	97	1.1	PH532_0350KX401_0010 MF EZ701U	385	400	705	35.00	35/1	2500	2000	4000	11	3.5	1.5	78	20

n_{2N} [rpm]	M_{2N} [Nm]	$M_{2,0}$ [Nm]	a_{th}	S	Type	M_{2acc} [Nm]	M_{2accHT} [Nm]	M_{2NOT} [Nm]	i	i_{exakt}	n_{1maxDB} EL1,2,5,6 [rpm]	n_{1maxDB} EL3,4 [rpm]	n_{1maxZB} [rpm]	J_1 [kgcm²]	$\Delta\varphi_2$ [arcmin]	$\Delta\varphi_{2red}$ [arcmin]	C_2 [Nm/arcmin]	m [kg]
PH532KX (n_{1N} = 3000 min^{-1}, $M_{2acc,max}$ = 390 Nm)																		
94	47	49	13	4.9	PH532_0160KX401_0020 MF EZ302U	147	147	696	32.00	32/1	2500	2500	5000	2.0	3.5	1.5	63	14
94	61	64	17	3.8	PH532_0160KX401_0020 MF EZ303U	205	205	696	32.00	32/1	2500	2500	5000	2.1	3.5	1.5	63	14
94	82	88	23	2.8	PH532_0160KX401_0020 MF EZ401U	249	249	696	32.00	32/1	2500	2500	5000	2.6	3.5	1.5	63	16
94	126	138	35	1.8	PH532_0160KX401_0020 MF EZ501U	355	355	696	32.00	32/1	2500	2500	5000	4.6	3.5	1.5	63	17
94	138	152	38	1.7	PH532_0160KX401_0020 MF EZ402U	355	355	696	32.00	32/1	2500	2500	5000	3.3	3.5	1.5	63	17
94	202	252	56	1.1	PH532_0160KX401_0020 MF EZ404U	355	355	696	32.00	32/1	2500	2500	5000	4.7	3.5	1.5	63	19
94	217	235	61	1.1	PH532_0160KX401_0020 MF EZ502U	355	355	696	32.00	32/1	2500	2500	5000	6.9	3.5	1.5	63	18
94	217	243	61	1.1	PH532_0160KX401_0020 MF EZ701U	355	355	696	32.00	32/1	2500	2500	5000	10	3.5	1.5	63	20
PH731KX (n_{1N} = 2000 min^{-1}, $M_{2acc,max}$ = 840 Nm)																		
200	369	414	179	1.2	PH731_0050KX701_0020 MF EZ813U	600	600	1302	10.00	10/1	1800	1800	3500	120	5.0	3.0	111	61
250	295	331	164	1.3	PH731_0040KX701_0020 MF EZ813U	480	480	1042	8.000	8/1	1800	1800	3500	120	5.5	3.5	94	61
286	258	289	211	1.7	PH731_0070KX701_0010 MF EZ813U	840	840	1604	7.000	7/1	1800	1600	3000	131	4.5	2.5	122	61
286	382	455	313	1.2	PH731_0070KX701_0010 MF EZ815U	840	840	1604	7.000	7/1	1800	1600	3000	194	4.5	2.5	122	74
400	184	207	151	2.4	PH731_0050KX701_0010 MF EZ813U	600	600	1146	5.000	5/1	1800	1600	3000	132	5.0	3.0	111	61
400	273	325	223	1.6	PH731_0050KX701_0010 MF EZ815U	600	600	1146	5.000	5/1	1800	1600	3000	195	5.0	3.0	111	74
500	147	165	138	2.6	PH731_0040KX701_0010 MF EZ813U	480	480	917	4.000	4/1	1800	1600	3000	135	5.5	3.5	94	61
500	218	260	205	1.8	PH731_0040KX701_0010 MF EZ815U	480	480	917	4.000	4/1	1800	1600	3000	198	5.5	3.5	94	74
PH731KX (n_{1N} = 3000 min^{-1}, $M_{2acc,max}$ = 840 Nm)																		
100	122	133	55	2.9	PH731_0100KX701_0030 MF EZ501U	454	454	1150	30.00	30/1	2100	2100	4000	15	4.0	2.0	110	31
100	210	227	95	1.7	PH731_0100KX701_0030 MF EZ502U	575	575	1150	30.00	30/1	2100	2100	4000	18	4.0	2.0	110	32
100	210	235	95	1.7	PH731_0100KX701_0030 MF EZ701U	567	567	1150	30.00	30/1	2100	2100	4000	21	4.0	2.0	110	34
100	275	315	124	1.3	PH731_0100KX701_0030 MF EZ503U	575	575	1150	30.00	30/1	2100	2100	4000	20	4.0	2.0	110	34
100	340	408	154	1.0	PH731_0100KX701_0030 MF EZ702U	575	575	1150	30.00	30/1	2100	2100	4000	26	4.0	2.0	110	36
143	147	159	53	3.0	PH731_0070KX701_0030 MF EZ502U	616	616	1720	21.00	21/1	2100	2100	4000	18	4.5	2.5	122	32
143	147	165	53	3.0	PH731_0070KX701_0030 MF EZ701U	397	397	1720	21.00	21/1	2100	2100	4000	21	4.5	2.5	122	34
143	193	220	69	2.3	PH731_0070KX701_0030 MF EZ503U	840	840	1720	21.00	21/1	2100	2100	4000	20	4.5	2.5	122	34
143	238	286	86	1.8	PH731_0070KX701_0030 MF EZ702U	814	814	1720	21.00	21/1	2100	2100	4000	26	4.5	2.5	122	36
143	268	318	96	1.6	PH731_0070KX701_0030 MF EZ505U	840	840	1720	21.00	21/1	2100	2100	4000	25	4.5	2.5	122	36
143	328	413	118	1.3	PH731_0070KX701_0030 MF EZ703U	840	840	1720	21.00	21/1	2100	2100	4000	34	4.5	2.5	122	38
143	423	600	152	1.0	PH731_0070KX701_0030 MF EZ705U	840	840	1720	21.00	21/1	2100	2100	4000	47	4.5	2.5	122	44
150	81	89	50	4.3	PH731_0100KX701_0020 MF EZ501U	303	303	1150	20.00	20/1	1800	1800	3500	18	4.0	2.0	110	31
150	140	151	86	2.5	PH731_0100KX701_0020 MF EZ502U	575	575	1150	20.00	20/1	1800	1800	3500	20	4.0	2.0	110	32
150	140	157	86	2.5	PH731_0100KX701_0020 MF EZ701U	378	378	1150	20.00	20/1	1800	1800	3500	23	4.0	2.0	110	34
150	183	210	112	1.9	PH731_0100KX701_0020 MF EZ503U	575	575	1150	20.00	20/1	1800	1800	3500	23	4.0	2.0	110	34
150	227	272	139	1.5	PH731_0100KX701_0020 MF EZ702U	575	575	1150	20.00	20/1	1800	1800	3500	29	4.0	2.0	110	36
150	255	303	156	1.4	PH731_0100KX701_0020 MF EZ505U	575	575	1150	20.00	20/1	1800	1800	3500	27	4.0	2.0	110	36
150	312	393	191	1.1	PH731_0100KX701_0020 MF EZ703U	575	575	1150	20.00	20/1	1800	1800	3500	37	4.0	2.0	110	38
200	105	113	40	4.0	PH731_0050KX701_0030 MF EZ502U	440	440	1302	15.00	15/1	2100	2100	4000	18	5.0	3.0	111	32
200	105	118	40	4.0	PH731_0050KX701_0030 MF EZ701U	284	284	1302	15.00	15/1	2100	2100	4000	21	5.0	3.0	111	34
200	138	157	52	3.0	PH731_0050KX701_0030 MF EZ503U	600	600	1302	15.00	15/1	2100	2100	4000	20	5.0	3.0	111	34
200	170	204	64	2.5	PH731_0050KX701_0030 MF EZ702U	582	582	1302	15.00	15/1	2100	2100	4000	26	5.0	3.0	111	36
200	191	227	72	2.2	PH731_0050KX701_0030 MF EZ505U	600	600	1302	15.00	15/1	2100	2100	4000	25	5.0	3.0	111	36
200	234	295	88	1.8	PH731_0050KX701_0030 MF EZ703U	600	600	1302	15.00	15/1	2100	2100	4000	34	5.0	3.0	111	38
200	302	428	114	1.4	PH731_0050KX701_0030 MF EZ705U	600	600	1302	15.00	15/1	2100	2100	4000	47	5.0	3.0	111	44
214	98	106	48	4.5	PH731_0070KX701_0020 MF EZ502U	410	410	1720	14.00	14/1	1800	1800	3500	20	4.5	2.5	122	32
214	98	110	48	4.5	PH731_0070KX701_0020 MF EZ701U	265	265	1720	14.00	14/1	1800	1800	3500	24	4.5	2.5	122	34
214	128	147	62	3.4	PH731_0070KX701_0020 MF EZ503U	569	569	1720	14.00	14/1	1800	1800	3500	23	4.5	2.5	122	34
214	159	191	77	2.8	PH731_0070KX701_0020 MF EZ702U	543	543	1720	14.00	14/1	1800	1800	3500	29	4.5	2.5	122	36
214	179	212	87	2.5	PH731_0070KX701_0020 MF EZ505U	840	840	1720	14.00	14/1	1800	1800	3500	27	4.5	2.5	122	36
214	218	275	106	2.0	PH731_0070KX701_0020 MF EZ703U	840	840	1720	14.00	14/1	1800	1800	3500	37	4.5	2.5	122	38
214	282	400	137	1.6	PH731_0070KX701_0020 MF EZ705U	840	840	1720	14.00	14/1	1800	1800	3500	49	4.5	2.5	122	44
250	84	91	40	4.0	PH731_0040KX701_0030 MF EZ502U	352	352	1042	12.00	12/1	2100	2100	4000	18	5.5	3.5	94	32
250	84	94	40	4.0	PH731_0040KX701_0030 MF EZ701U	227	227	1042	12.00	12/1	2100	2100	4000	22	5.5	3.5	94	34
250	110	126	52	3.0	PH731_0040KX701_0030 MF EZ503U	480	480	1042	12.00	12/1	2100	2100	4000	21	5.5	3.5	94	34
250	136	163	64	2.5	PH731_0040KX701_0030 MF EZ702U	465	465	1042	12.00	12/1	2100	2100	4000	27	5.5	3.5	94	36
250	153	182	72	2.2	PH731_0040KX701_0030 MF EZ505U	480	480	1042	12.00	12/1	2100	2100	4000	25	5.5	3.5	94	36
250	187	236	88	1.8	PH731_0040KX701_0030 MF EZ703U	480	480	1042	12.00	12/1	2100	2100	4000	35	5.5	3.5	94	38
250	242	343	114	1.4	PH731_0040KX701_0030 MF EZ705U	480	480	1042	12.00	12/1	2100	2100	4000	47	5.5	3.5	94	44
300	92	105	47	4.6	PH731_0050KX701_0020 MF EZ503U	407	407	1302	10.00	10/1	1800	1800	3500	23	5.0	3.0	111	34
300	113	136	58	3.7	PH731_0050KX701_0020 MF EZ702U	388	388	1302	10.00	10/1	1800	1800	3500	29	5.0	3.0	111	36
300	128	151	65	3.3	PH731_0050KX701_0020 MF EZ505U	600	600	1302	10.00	10/1	1800	1800	3500	28	5.0	3.0	111	36
300	156	197	80	2.7	PH731_0050KX701_0020 MF EZ703U	600	600	1302	10.00	10/1	1800	1800	3500	37	5.0	3.0	111	38
300	201	286	103	2.1	PH731_0050KX701_0020 MF EZ705U	600	600	1302	10.00	10/1	1800	1800	3500	49	5.0	3.0	111	44
375	73	84	47	4.6	PH731_0040KX701_0020 MF EZ503U	325	325	1042	8.000	8/1	1800	1800	3500	24	5.5	3.5	94	34

n_{2N} [rpm]	M_{2N} [Nm]	$M_{2,0}$ [Nm]	a_{th}	S	Type	M_{2acc} [Nm]	M_{2accHT} [Nm]	M_{2NOT} [Nm]	i	i_{exakt}	n_{1maxDB} EL1,2,5,6 [rpm]	n_{1maxDB} EL3,4 [rpm]	n_{1maxZB} [rpm]	J_1 [kgcm²]	$\Delta\varphi_2$ [arcmin]	$\Delta\varphi_{2red}$ [arcmin]	C_2 [Nm/arcmin]	m [kg]
PH731KX (n_{1N} = 3000 min^{-1}, $M_{2acc,max}$ = 840 Nm)																		
375	91	109	58	3.7	PH731_0040KX701_0020 MF EZ702U	310	310	1042	8.000	8/1	1800	1800	3500	30	5.5	3.5	94	36
375	102	121	65	3.3	PH731_0040KX701_0020 MF EZ505U	480	480	1042	8.000	8/1	1800	1800	3500	28	5.5	3.5	94	36
375	125	157	80	2.7	PH731_0040KX701_0020 MF EZ703U	480	480	1042	8.000	8/1	1800	1800	3500	38	5.5	3.5	94	38
375	161	228	103	2.1	PH731_0040KX701_0020 MF EZ705U	480	480	1042	8.000	8/1	1800	1800	3500	50	5.5	3.5	94	44
429	79	95	74	4.8	PH731_0070KX701_0010 MF EZ702U	271	271	1604	7.000	7/1	1800	1600	3000	40	4.5	2.5	122	36
429	89	106	84	4.3	PH731_0070KX701_0010 MF EZ505U	443	443	1604	7.000	7/1	1800	1600	3000	39	4.5	2.5	122	36
429	109	138	102	3.5	PH731_0070KX701_0010 MF EZ703U	430	430	1604	7.000	7/1	1800	1600	3000	48	4.5	2.5	122	38
429	141	200	132	2.7	PH731_0070KX701_0010 MF EZ705U	688	688	1604	7.000	7/1	1800	1600	3000	60	4.5	2.5	122	44
600	78	98	73	4.9	PH731_0050KX701_0010 MF EZ703U	307	307	1146	5.000	5/1	1800	1600	3000	50	5.0	3.0	111	38
600	101	143	94	3.8	PH731_0050KX701_0010 MF EZ705U	492	492	1146	5.000	5/1	1800	1600	3000	62	5.0	3.0	111	44
750	81	114	86	4.2	PH731_0040KX701_0010 MF EZ705U	393	393	917	4.000	4/1	1800	1600	3000	64	5.5	3.5	94	44
PH731KX (n_{1N} = 4000 min^{-1}, $M_{2acc,max}$ = 600 Nm)																		
267	357	620	148	1.1	PH731_0050KX701_0030 MF EZ813U	600	600	1302	15.00	15/1	2100	2100	4000	117	5.0	3.0	111	61
267	370	952	153	1.0	PH731_0050KX701_0030 MF EZ815U	600	600	1302	15.00	15/1	2100	2100	4000	180	5.0	3.0	111	74
333	286	496	148	1.1	PH731_0040KX701_0030 MF EZ813U	480	480	1042	12.00	12/1	2100	2100	4000	117	5.5	3.5	94	61
333	296	762	153	1.0	PH731_0040KX701_0030 MF EZ815U	480	480	1042	12.00	12/1	2100	2100	4000	180	5.5	3.5	94	74
PH732KX (n_{1N} = 3000 min^{-1}, $M_{2acc,max}$ = 870 Nm)																		
14	539	577	47	1.1	PH732_0700KX501_0030 MF EZ401U	809	847	1617	210.0	210/1	3000	3000	5000	5.7	3.0	1.0	152	26
20	385	412	34	1.6	PH732_0500KX501_0030 MF EZ401U	830	834	1660	150.0	150/1	3000	3000	5000	5.8	3.0	1.0	171	26
20	591	646	52	1.0	PH732_0500KX501_0030 MF EZ501U	830	834	1660	150.0	150/1	3000	3000	5000	7.7	3.0	1.0	171	27
21	359	385	43	1.7	PH732_0700KX501_0020 MF EZ401U	809	847	1617	140.0	140/1	2500	2500	4500	6.3	3.0	1.0	152	26
21	551	603	66	1.1	PH732_0700KX501_0020 MF EZ501U	809	847	1617	140.0	140/1	2500	2500	4500	8.2	3.0	1.0	152	27
25	308	330	30	1.8	PH732_0400KX501_0030 MF EZ401U	770	770	1540	120.0	120/1	3000	3000	5000	5.8	3.5	1.5	174	26
25	473	517	46	1.1	PH732_0400KX501_0030 MF EZ501U	770	770	1540	120.0	120/1	3000	3000	5000	7.8	3.5	1.5	174	27
25	517	572	50	1.0	PH732_0400KX501_0030 MF EZ402U	770	770	1540	120.0	120/1	3000	3000	5000	6.5	3.5	1.5	174	27
29	269	289	26	2.0	PH732_0350KX501_0030 MF EZ401U	818	818	1720	105.0	105/1	3000	3000	5000	5.8	3.5	1.5	172	26
29	414	452	40	1.3	PH732_0350KX501_0030 MF EZ501U	866	908	1720	105.0	105/1	3000	3000	5000	7.7	3.5	1.5	172	27
29	452	500	44	1.2	PH732_0350KX501_0030 MF EZ402U	866	908	1720	105.0	105/1	3000	3000	5000	6.5	3.5	1.5	172	27
30	256	275	31	2.3	PH732_0500KX501_0020 MF EZ401U	779	779	1660	100.0	100/1	2500	2500	4500	6.3	3.0	1.0	171	26
30	394	431	47	1.5	PH732_0500KX501_0020 MF EZ501U	830	834	1660	100.0	100/1	2500	2500	4500	8.3	3.0	1.0	171	27
30	431	476	51	1.4	PH732_0500KX501_0020 MF EZ402U	830	834	1660	100.0	100/1	2500	2500	4500	7.0	3.0	1.0	171	27
36	215	231	21	2.5	PH732_0280KX501_0030 MF EZ401U	654	654	1540	84.00	84/1	3000	3000	5000	5.8	3.5	1.5	176	26
36	331	362	32	1.6	PH732_0280KX501_0030 MF EZ501U	770	880	1540	84.00	84/1	3000	3000	5000	7.8	3.5	1.5	176	27
36	362	400	35	1.5	PH732_0280KX501_0030 MF EZ402U	770	880	1540	84.00	84/1	3000	3000	5000	6.5	3.5	1.5	176	27
36	531	662	52	1.0	PH732_0280KX501_0030 MF EZ404U	770	880	1540	84.00	84/1	3000	3000	5000	7.9	3.5	1.5	176	29
38	205	220	27	2.6	PH732_0400KX501_0020 MF EZ401U	623	623	1540	80.00	80/1	2500	2500	4500	6.4	3.5	1.5	174	26
38	315	344	42	1.7	PH732_0400KX501_0020 MF EZ501U	770	770	1540	80.00	80/1	2500	2500	4500	8.4	3.5	1.5	174	27
38	344	381	46	1.6	PH732_0400KX501_0020 MF EZ402U	770	770	1540	80.00	80/1	2500	2500	4500	7.1	3.5	1.5	174	27
38	506	630	67	1.1	PH732_0400KX501_0020 MF EZ404U	770	770	1540	80.00	80/1	2500	2500	4500	8.5	3.5	1.5	174	29
40	192	206	20	2.6	PH732_0250KX501_0030 MF EZ401U	584	584	1720	75.00	75/1	3000	3000	5000	5.8	3.5	1.5	166	26
40	295	323	31	1.7	PH732_0250KX501_0030 MF EZ501U	866	908	1720	75.00	75/1	3000	3000	5000	7.7	3.5	1.5	166	27
40	323	357	34	1.5	PH732_0250KX501_0030 MF EZ402U	866	908	1720	75.00	75/1	3000	3000	5000	6.5	3.5	1.5	166	27
40	474	591	50	1.1	PH732_0250KX501_0030 MF EZ404U	866	908	1720	75.00	75/1	3000	3000	5000	7.8	3.5	1.5	166	29
43	180	192	24	3.0	PH732_0350KX501_0020 MF EZ401U	545	545	1720	70.00	70/1	2500	2500	4500	6.3	3.5	1.5	172	26
43	276	301	36	2.0	PH732_0350KX501_0020 MF EZ501U	866	908	1720	70.00	70/1	2500	2500	4500	8.3	3.5	1.5	172	27
43	301	333	40	1.8	PH732_0350KX501_0020 MF EZ402U	866	908	1720	70.00	70/1	2500	2500	4500	7.0	3.5	1.5	172	27
43	442	551	58	1.2	PH732_0350KX501_0020 MF EZ404U	866	908	1720	70.00	70/1	2500	2500	4500	8.4	3.5	1.5	172	29
43	475	513	63	1.1	PH732_0350KX501_0020 MF EZ502U	866	908	1720	70.00	70/1	2500	2500	4500	11	3.5	1.5	172	28
43	475	532	63	1.1	PH732_0350KX501_0020 MF EZ701U	866	908	1720	70.00	70/1	2500	2500	4500	14	3.5	1.5	172	30
50	154	165	18	3.0	PH732_0200KX501_0030 MF EZ401U	467	467	1610	60.00	60/1	3000	3000	5000	5.8	3.5	1.5	157	26
50	236	258	27	1.9	PH732_0200KX501_0030 MF EZ501U	805	845	1610	60.00	60/1	3000	3000	5000	7.8	3.5	1.5	157	27
50	258	286	30	1.8	PH732_0200KX501_0030 MF EZ402U	805	845	1610	60.00	60/1	3000	3000	5000	6.5	3.5	1.5	157	27
50	379	473	43	1.2	PH732_0200KX501_0030 MF EZ404U	805	845	1610	60.00	60/1	3000	3000	5000	7.8	3.5	1.5	157	29
50	407	440	47	1.1	PH732_0200KX501_0030 MF EZ502U	805	845	1610	60.00	60/1	3000	3000	5000	10	3.5	1.5	157	28
50	407	456	47	1.1	PH732_0200KX501_0030 MF EZ701U	805	845	1610	60.00	60/1	3000	3000	5000	13	3.5	1.5	157	30
54	144	154	19	3.8	PH732_0280KX501_0020 MF EZ401U	436	436	1540	56.00	56/1	2500	2500	4500	6.4	3.5	1.5	176	26
54	221	241	29	2.4	PH732_0280KX501_0020 MF EZ501U	770	821	1540	56.00	56/1	2500	2500	4500	8.4	3.5	1.5	176	27
54	241	267	32	2.2	PH732_0280KX501_0020 MF EZ402U	770	821	1540	56.00	56/1	2500	2500	4500	7.1	3.5	1.5	176	27
54	354	441	47	1.5	PH732_0280KX501_0020 MF EZ404U	770	880	1540	56.00	56/1	2500	2500	4500	8.5	3.5	1.5	176	29
54	380	410	50	1.4	PH732_0280KX501_0020 MF EZ502U	770	880	1540	56.00	56/1	2500	2500	4500	11	3.5	1.5	176	28
54	380	426	50	1.4	PH732_0280KX501_0020 MF EZ701U	770	880	1540	56.00	56/1	2500	2500	4500	14	3.5	1.5	176	30
54	498	569	66	1.1	PH732_0280KX501_0020 MF EZ503U	770	880	1540	56.00	56/1	2500	2500	4500	13	3.5	1.5	176	30
60	128	137	18	3.9	PH732_0250KX501_0020 MF EZ401U	389	389	1720	50.00	50/1	2500	2500	4500	6.4	3.5	1.5	166	26
60	197	215	28	2.5	PH732_0250KX501_0020 MF EZ501U	733	733	1720	50.00	50/1	2500	2500	4500	8.3	3.5	1.5	166	27

n_{2N} [rpm]	M_{2N} [Nm]	$M_{2,0}$ [Nm]	a_{th}	S	Type	M_{2acc} [Nm]	M_{2accHT} [Nm]	M_{2NOT} [Nm]	i	i_{exakt}	n_{1maxDB} EL1,2,5,6 [rpm]	n_{1maxDB} EL3,4 [rpm]	n_{1maxZB} [rpm]	J_1 [kgcm²]	$\Delta\varphi_2$ [arcmin]	$\Delta\varphi_{2red}$ [arcmin]	C_2 [Nm/arcmin]	m [kg]
PH732KX (n_{1N} = 3000 min^{-1}, $M_{2acc,max}$ = 870 Nm)																		
60	215	238	31	2.3	PH732_0250KX501_0020 MF EZ402U	733	733	1720	50.00	50/1	2500	2500	4500	7.1	3.5	1.5	166	27
60	316	394	45	1.6	PH732_0250KX501_0020 MF EZ404U	866	908	1720	50.00	50/1	2500	2500	4500	8.4	3.5	1.5	166	29
60	339	366	48	1.5	PH732_0250KX501_0020 MF EZ502U	866	908	1720	50.00	50/1	2500	2500	4500	11	3.5	1.5	166	28
60	339	380	48	1.5	PH732_0250KX501_0020 MF EZ701U	866	908	1720	50.00	50/1	2500	2500	4500	14	3.5	1.5	166	30
60	444	508	63	1.1	PH732_0250KX501_0020 MF EZ503U	866	908	1720	50.00	50/1	2500	2500	4500	13	3.5	1.5	166	30
63	123	132	14	3.7	PH732_0160KX501_0030 MF EZ401U	374	374	1480	48.00	48/1	3000	3000	5000	5.8	3.5	1.5	152	26
63	189	207	22	2.4	PH732_0160KX501_0030 MF EZ501U	704	704	1480	48.00	48/1	3000	3000	5000	7.8	3.5	1.5	152	27
63	207	229	24	2.2	PH732_0160KX501_0030 MF EZ402U	704	704	1480	48.00	48/1	3000	3000	5000	6.5	3.5	1.5	152	27
63	303	378	35	1.5	PH732_0160KX501_0030 MF EZ404U	740	740	1480	48.00	48/1	3000	3000	5000	7.9	3.5	1.5	152	29
63	325	352	38	1.4	PH732_0160KX501_0030 MF EZ502U	740	740	1480	48.00	48/1	3000	3000	5000	10	3.5	1.5	152	28
63	325	365	38	1.4	PH732_0160KX501_0030 MF EZ701U	740	740	1480	48.00	48/1	3000	3000	5000	13	3.5	1.5	152	30
63	427	488	50	1.1	PH732_0160KX501_0030 MF EZ503U	740	740	1480	48.00	48/1	3000	3000	5000	12	3.5	1.5	152	30
75	103	110	16	4.5	PH732_0200KX501_0020 MF EZ401U	311	311	1610	40.00	40/1	2500	2500	4500	6.4	3.5	1.5	157	26
75	158	172	24	2.9	PH732_0200KX501_0020 MF EZ501U	586	586	1610	40.00	40/1	2500	2500	4500	8.3	3.5	1.5	157	27
75	172	191	27	2.7	PH732_0200KX501_0020 MF EZ402U	586	586	1610	40.00	40/1	2500	2500	4500	7.1	3.5	1.5	157	27
75	253	315	39	1.8	PH732_0200KX501_0020 MF EZ404U	805	845	1610	40.00	40/1	2500	2500	4500	8.4	3.5	1.5	157	29
75	271	293	42	1.7	PH732_0200KX501_0020 MF EZ502U	805	845	1610	40.00	40/1	2500	2500	4500	11	3.5	1.5	157	28
75	271	304	42	1.7	PH732_0200KX501_0020 MF EZ701U	733	733	1610	40.00	40/1	2500	2500	4500	14	3.5	1.5	157	30
75	355	407	55	1.3	PH732_0200KX501_0020 MF EZ503U	805	845	1610	40.00	40/1	2500	2500	4500	13	3.5	1.5	157	30
75	440	528	68	1.0	PH732_0200KX501_0020 MF EZ702U	805	845	1610	40.00	40/1	2500	2500	4500	19	3.5	1.5	157	33
86	138	151	31	3.9	PH732_0350KX501_0010 MF EZ501U	513	513	1720	35.00	35/1	2500	2000	3500	11	3.5	1.5	172	27
86	151	167	33	3.6	PH732_0350KX501_0010 MF EZ402U	513	513	1720	35.00	35/1	2500	2000	3500	9.7	3.5	1.5	172	27
86	221	276	49	2.4	PH732_0350KX501_0010 MF EZ404U	866	908	1720	35.00	35/1	2500	2000	3500	11	3.5	1.5	172	29
86	237	256	53	2.3	PH732_0350KX501_0010 MF EZ502U	866	908	1720	35.00	35/1	2500	2000	3500	13	3.5	1.5	172	28
86	237	266	53	2.3	PH732_0350KX501_0010 MF EZ701U	641	641	1720	35.00	35/1	2500	2000	3500	17	3.5	1.5	172	30
86	311	356	69	1.7	PH732_0350KX501_0010 MF EZ503U	866	908	1720	35.00	35/1	2500	2000	3500	16	3.5	1.5	172	30
86	385	462	85	1.4	PH732_0350KX501_0010 MF EZ702U	866	908	1720	35.00	35/1	2500	2000	3500	22	3.5	1.5	172	33
86	433	513	96	1.2	PH732_0350KX501_0010 MF EZ505U	866	908	1720	35.00	35/1	2500	2000	3500	20	3.5	1.5	172	33
86	529	667	118	1.0	PH732_0350KX501_0010 MF EZ703U	866	908	1720	35.00	35/1	2500	2000	3500	30	3.5	1.5	172	35
94	126	138	20	3.6	PH732_0160KX501_0020 MF EZ501U	469	469	1480	32.00	32/1	2500	2500	4500	8.5	3.5	1.5	152	27
94	138	152	22	3.3	PH732_0160KX501_0020 MF EZ402U	469	469	1480	32.00	32/1	2500	2500	4500	7.2	3.5	1.5	152	27
94	202	252	32	2.2	PH732_0160KX501_0020 MF EZ404U	740	740	1480	32.00	32/1	2500	2500	4500	8.5	3.5	1.5	152	29
94	217	235	34	2.1	PH732_0160KX501_0020 MF EZ502U	740	740	1480	32.00	32/1	2500	2500	4500	11	3.5	1.5	152	28
94	217	243	34	2.1	PH732_0160KX501_0020 MF EZ701U	586	586	1480	32.00	32/1	2500	2500	4500	14	3.5	1.5	152	30
94	284	325	45	1.6	PH732_0160KX501_0020 MF EZ503U	740	740	1480	32.00	32/1	2500	2500	4500	13	3.5	1.5	152	30
94	352	422	56	1.3	PH732_0160KX501_0020 MF EZ702U	740	740	1480	32.00	32/1	2500	2500	4500	19	3.5	1.5	152	33
94	396	469	63	1.1	PH732_0160KX501_0020 MF EZ505U	740	740	1480	32.00	32/1	2500	2500	4500	18	3.5	1.5	152	33
PH732KX (n_{1N} = 4500 min^{-1}, $M_{2acc,max}$ = 870 Nm)																		
80	487	785	64	1.1	PH732_0280KX501_0020 MF EZ505U	770	880	1540	56.00	56/1	2500	2500	4500	18	3.5	1.5	176	33
90	435	701	62	1.1	PH732_0250KX501_0020 MF EZ505U	866	908	1720	50.00	50/1	2500	2500	4500	18	3.5	1.5	166	33
94	418	673	49	1.1	PH732_0160KX501_0030 MF EZ505U	740	740	1480	48.00	48/1	3000	3000	5000	17	3.5	1.5	152	33
113	348	561	54	1.3	PH732_0200KX501_0020 MF EZ505U	805	845	1610	40.00	40/1	2500	2500	4500	18	3.5	1.5	157	33
113	443	733	69	1.0	PH732_0200KX501_0020 MF EZ703U	805	845	1610	40.00	40/1	2500	2500	4500	27	3.5	1.5	157	35
141	278	448	44	1.6	PH732_0160KX501_0020 MF EZ505U	740	740	1480	32.00	32/1	2500	2500	4500	18	3.5	1.5	152	33
141	355	586	56	1.3	PH732_0160KX501_0020 MF EZ703U	740	740	1480	32.00	32/1	2500	2500	4500	27	3.5	1.5	152	35
PH831KX (n_{1N} = 2000 min^{-1}, $M_{2acc,max}$ = 1200 Nm)																		
100	737	827	186	1.2	PH831_0100KX701_0020 MF EZ813U	1200	1200	2604	20.00	20/1	1800	1800	3500	120	4.0	2.0	253	80
143	516	579	164	1.3	PH831_0070KX701_0020 MF EZ813U	840	840	1823	14.00	14/1	1800	1800	3500	121	4.5	2.5	232	80
200	369	414	172	2.1	PH831_0100KX701_0010 MF EZ813U	1200	1200	2292	10.00	10/1	1800	1600	3000	134	4.0	2.0	253	80
200	546	650	255	1.4	PH831_0100KX701_0010 MF EZ815U	1200	1200	2292	10.00	10/1	1800	1600	3000	197	4.0	2.0	253	92
250	295	331	164	1.3	PH831_0040KX701_0020 MF EZ813U	480	480	1042	8.000	8/1	1800	1800	3500	126	5.5	3.5	122	80
286	258	289	138	2.6	PH831_0070KX701_0010 MF EZ813U	840	840	1604	7.000	7/1	1800	1600	3000	138	4.5	2.5	232	80
286	382	455	205	1.8	PH831_0070KX701_0010 MF EZ815U	840	840	1604	7.000	7/1	1800	1600	3000	201	4.5	2.5	232	92
400	184	207	138	2.6	PH831_0050KX701_0010 MF EZ813U	600	600	1146	5.000	5/1	1800	1600	3000	146	5.0	3.0	170	80
400	273	325	205	1.8	PH831_0050KX701_0010 MF EZ815U	600	600	1146	5.000	5/1	1800	1600	3000	209	5.0	3.0	170	92
500	147	165	138	2.6	PH831_0040KX701_0010 MF EZ813U	480	480	917	4.000	4/1	1800	1600	3000	156	5.5	3.5	122	80
500	218	260	205	1.8	PH831_0040KX701_0010 MF EZ815U	480	480	917	4.000	4/1	1800	1600	3000	219	5.5	3.5	122	92
PH831KX (n_{1N} = 3000 min^{-1}, $M_{2acc,max}$ = 1200 Nm)																		
100	210	227	40	4.0	PH831_0100KX701_0030 MF EZ502U	879	879	2604	30.00	30/1	2100	2100	4000	18	4.0	2.0	253	50
100	210	235	40	4.0	PH831_0100KX701_0030 MF EZ701U	567	567	2604	30.00	30/1	2100	2100	4000	21	4.0	2.0	253	52
100	275	315	52	3.0	PH831_0100KX701_0030 MF EZ503U	1200	1200	2604	30.00	30/1	2100	2100	4000	20	4.0	2.0	253	52
100	340	408	64	2.5	PH831_0100KX701_0030 MF EZ702U	1163	1163	2604	30.00	30/1	2100	2100	4000	27	4.0	2.0	253	55
100	383	454	72	2.2	PH831_0100KX701_0030 MF EZ505U	1200	1200	2604	30.00	30/1	2100	2100	4000	25	4.0	2.0	253	55

n_{2N} [rpm]	M_{2N} [Nm]	$M_{2,0}$ [Nm]	a_{th}	S	Type	M_{2acc} [Nm]	M_{2accHT} [Nm]	M_{2NOT} [Nm]	i	i_{exakt}	n_{1maxDB} EL1,2,5,6 [rpm]	n_{1maxDB} EL3,4 [rpm]	n_{1maxZB} [rpm]	J_1 [kgcm²]	$\Delta\varphi_2$ [arcmin]	$\Delta\varphi_{2red}$ [arcmin]	C_2 [Nm/arcmin]	m [kg]
PH831KX (n_{1N} = 3000 min^{-1}, $M_{2acc,max}$ = 1200 Nm)																		
100	468	590	88	1.8	PH831_0100KX701_0030 MF EZ703U	1200	1200	2604	30.00	30/1	2100	2100	4000	35	4.0	2.0	253	57
100	604	857	114	1.4	PH831_0100KX701_0030 MF EZ705U	1200	1200	2604	30.00	30/1	2100	2100	4000	47	4.0	2.0	253	62
143	147	159	40	4.0	PH831_0070KX701_0030 MF EZ502U	616	616	1823	21.00	21/1	2100	2100	4000	19	4.5	2.5	232	50
143	147	165	40	4.0	PH831_0070KX701_0030 MF EZ701U	397	397	1823	21.00	21/1	2100	2100	4000	22	4.5	2.5	232	52
143	193	220	52	3.0	PH831_0070KX701_0030 MF EZ503U	840	840	1823	21.00	21/1	2100	2100	4000	21	4.5	2.5	232	52
143	238	286	64	2.5	PH831_0070KX701_0030 MF EZ702U	814	814	1823	21.00	21/1	2100	2100	4000	27	4.5	2.5	232	55
143	268	318	72	2.2	PH831_0070KX701_0030 MF EZ505U	840	840	1823	21.00	21/1	2100	2100	4000	26	4.5	2.5	232	55
143	328	413	88	1.8	PH831_0070KX701_0030 MF EZ703U	840	840	1823	21.00	21/1	2100	2100	4000	35	4.5	2.5	232	57
143	423	600	114	1.4	PH831_0070KX701_0030 MF EZ705U	840	840	1823	21.00	21/1	2100	2100	4000	47	4.5	2.5	232	62
150	183	210	47	4.6	PH831_0100KX701_0020 MF EZ503U	813	813	2604	20.00	20/1	1800	1800	3500	23	4.0	2.0	253	52
150	227	272	58	3.7	PH831_0100KX701_0020 MF EZ702U	775	775	2604	20.00	20/1	1800	1800	3500	30	4.0	2.0	253	55
150	255	303	65	3.3	PH831_0100KX701_0020 MF EZ505U	1200	1200	2604	20.00	20/1	1800	1800	3500	28	4.0	2.0	253	55
150	312	393	80	2.7	PH831_0100KX701_0020 MF EZ703U	1200	1200	2604	20.00	20/1	1800	1800	3500	37	4.0	2.0	253	57
150	403	571	103	2.1	PH831_0100KX701_0020 MF EZ705U	1200	1200	2604	20.00	20/1	1800	1800	3500	50	4.0	2.0	253	62
200	105	113	40	4.0	PH831_0050KX701_0030 MF EZ502U	440	440	1302	15.00	15/1	2100	2100	4000	19	5.0	3.0	170	50
200	105	118	40	4.0	PH831_0050KX701_0030 MF EZ701U	284	284	1302	15.00	15/1	2100	2100	4000	23	5.0	3.0	170	52
200	138	157	52	3.0	PH831_0050KX701_0030 MF EZ503U	600	600	1302	15.00	15/1	2100	2100	4000	22	5.0	3.0	170	52
200	170	204	64	2.5	PH831_0050KX701_0030 MF EZ702U	582	582	1302	15.00	15/1	2100	2100	4000	28	5.0	3.0	170	55
200	191	227	72	2.2	PH831_0050KX701_0030 MF EZ505U	600	600	1302	15.00	15/1	2100	2100	4000	26	5.0	3.0	170	55
200	234	295	88	1.8	PH831_0050KX701_0030 MF EZ703U	600	600	1302	15.00	15/1	2100	2100	4000	36	5.0	3.0	170	57
200	302	428	114	1.4	PH831_0050KX701_0030 MF EZ705U	600	600	1302	15.00	15/1	2100	2100	4000	48	5.0	3.0	170	62
214	128	147	47	4.6	PH831_0070KX701_0020 MF EZ503U	569	569	1823	14.00	14/1	1800	1800	3500	25	4.5	2.5	232	52
214	159	191	58	3.7	PH831_0070KX701_0020 MF EZ702U	543	543	1823	14.00	14/1	1800	1800	3500	31	4.5	2.5	232	55
214	179	212	65	3.3	PH831_0070KX701_0020 MF EZ505U	840	840	1823	14.00	14/1	1800	1800	3500	29	4.5	2.5	232	55
214	218	275	80	2.7	PH831_0070KX701_0020 MF EZ703U	840	840	1823	14.00	14/1	1800	1800	3500	39	4.5	2.5	232	57
214	282	400	103	2.1	PH831_0070KX701_0020 MF EZ705U	840	840	1823	14.00	14/1	1800	1800	3500	51	4.5	2.5	232	62
250	84	91	40	4.0	PH831_0040KX701_0030 MF EZ502U	352	352	1042	12.00	12/1	2100	2100	4000	21	5.5	3.5	122	50
250	84	94	40	4.0	PH831_0040KX701_0030 MF EZ701U	227	227	1042	12.00	12/1	2100	2100	4000	24	5.5	3.5	122	52
250	110	126	52	3.0	PH831_0040KX701_0030 MF EZ503U	480	480	1042	12.00	12/1	2100	2100	4000	23	5.5	3.5	122	52
250	136	163	64	2.5	PH831_0040KX701_0030 MF EZ702U	465	465	1042	12.00	12/1	2100	2100	4000	29	5.5	3.5	122	55
250	153	182	72	2.2	PH831_0040KX701_0030 MF EZ505U	480	480	1042	12.00	12/1	2100	2100	4000	28	5.5	3.5	122	55
250	187	236	88	1.8	PH831_0040KX701_0030 MF EZ703U	480	480	1042	12.00	12/1	2100	2100	4000	37	5.5	3.5	122	57
250	242	343	114	1.4	PH831_0040KX701_0030 MF EZ705U	480	480	1042	12.00	12/1	2100	2100	4000	49	5.5	3.5	122	62
300	156	197	83	4.3	PH831_0100KX701_0010 MF EZ703U	615	615	2292	10.00	10/1	1800	1600	3000	51	4.0	2.0	253	57
300	201	286	107	3.4	PH831_0100KX701_0010 MF EZ705U	983	983	2292	10.00	10/1	1800	1600	3000	63	4.0	2.0	253	62
375	73	84	47	4.6	PH831_0040KX701_0020 MF EZ503U	325	325	1042	8.000	8/1	1800	1800	3500	29	5.5	3.5	122	52
375	91	109	58	3.7	PH831_0040KX701_0020 MF EZ702U	310	310	1042	8.000	8/1	1800	1800	3500	35	5.5	3.5	122	55
375	102	121	65	3.3	PH831_0040KX701_0020 MF EZ505U	480	480	1042	8.000	8/1	1800	1800	3500	34	5.5	3.5	122	55
375	125	157	80	2.7	PH831_0040KX701_0020 MF EZ703U	480	480	1042	8.000	8/1	1800	1800	3500	43	5.5	3.5	122	57
375	161	228	103	2.1	PH831_0040KX701_0020 MF EZ705U	480	480	1042	8.000	8/1	1800	1800	3500	55	5.5	3.5	122	62
429	141	200	86	4.2	PH831_0070KX701_0010 MF EZ705U	688	688	1604	7.000	7/1	1800	1600	3000	68	4.5	2.5	232	62
600	101	143	86	4.2	PH831_0050KX701_0010 MF EZ705U	492	492	1146	5.000	5/1	1800	1600	3000	75	5.0	3.0	170	62
750	81	114	86	4.2	PH831_0040KX701_0010 MF EZ705U	393	393	917	4.000	4/1	1800	1600	3000	86	5.5	3.5	122	62
PH831KX (n_{1N} = 4000 min^{-1}, $M_{2acc,max}$ = 1200 Nm)																		
133	715	1240	148	1.1	PH831_0100KX701_0030 MF EZ813U	1200	1200	2604	30.00	30/1	2100	2100	4000	117	4.0	2.0	253	80
133	741	1905	153	1.0	PH831_0100KX701_0030 MF EZ815U	1200	1200	2604	30.00	30/1	2100	2100	4000	180	4.0	2.0	253	92
190	500	868	148	1.1	PH831_0070KX701_0030 MF EZ813U	840	840	1823	21.00	21/1	2100	2100	4000	118	4.5	2.5	232	80
190	518	1333	153	1.0	PH831_0070KX701_0030 MF EZ815U	840	840	1823	21.00	21/1	2100	2100	4000	181	4.5	2.5	232	92
267	357	620	148	1.1	PH831_0050KX701_0030 MF EZ813U	600	600	1302	15.00	15/1	2100	2100	4000	119	5.0	3.0	170	80
267	370	952	153	1.0	PH831_0050KX701_0030 MF EZ815U	600	600	1302	15.00	15/1	2100	2100	4000	182	5.0	3.0	170	92
333	286	496	148	1.1	PH831_0040KX701_0030 MF EZ813U	480	480	1042	12.00	12/1	2100	2100	4000	120	5.5	3.5	122	80
333	296	762	153	1.0	PH831_0040KX701_0030 MF EZ815U	480	480	1042	12.00	12/1	2100	2100	4000	183	5.5	3.5	122	92
PH832KX (n_{1N} = 3000 min^{-1}, $M_{2acc,max}$ = 2100 Nm)																		
14	827	904	92	1.7	PH832_0700KX701_0030 MF EZ501U	1848	1936	3696	210.0	210/1	2100	2100	4000	15	3.0	1.0	421	54
15	788	861	159	1.3	PH832_1000KX701_0020 MF EZ501U	1380	1380	2760	200.0	200/1	1800	1800	3500	18	3.0	1.0	332	54
20	591	646	60	2.6	PH832_0500KX701_0030 MF EZ501U	2100	2199	4200	150.0	150/1	2100	2100	4000	16	3.0	1.0	481	54
20	1017	1099	103	1.5	PH832_0500KX701_0030 MF EZ502U	2100	2300	4200	150.0	150/1	2100	2100	4000	18	3.0	1.0	481	56
20	1017	1140	103	1.5	PH832_0500KX701_0030 MF EZ701U	2100	2300	4200	150.0	150/1	2100	2100	4000	21	3.0	1.0	481	58
20	1333	1525	135	1.2	PH832_0500KX701_0030 MF EZ503U	2100	2300	4200	150.0	150/1	2100	2100	4000	20	3.0	1.0	481	57
21	551	603	83	2.6	PH832_0700KX701_0020 MF EZ501U	1848	1936	3696	140.0	140/1	1800	1800	3500	18	3.0	1.0	421	54
21	949	1026	143	1.5	PH832_0700KX701_0020 MF EZ502U	1848	1936	3696	140.0	140/1	1800	1800	3500	20	3.0	1.0	421	56
21	949	1064	143	1.5	PH832_0700KX701_0020 MF EZ701U	1848	1936	3696	140.0	140/1	1800	1800	3500	23	3.0	1.0	421	58
21	1244	1424	187	1.1	PH832_0700KX701_0020 MF EZ503U	1848	1936	3696	140.0	140/1	1800	1800	3500	23	3.0	1.0	421	57
25	473	517	68	2.3	PH832_0400KX701_0030 MF EZ501U	1759	1759	3840	120.0	120/1	2100	2100	4000	16	3.5	1.5	440	54

n_{2N} [rpm]	M_{2N} [Nm]	$M_{2,0}$ [Nm]	a_{th}	S	Type	M_{2acc} [Nm]	M_{2accHT} [Nm]	M_{2NOT} [Nm]	i	i_{exakt}	n_{1maxDB} EL1,2,5,6 [rpm]	n_{1maxDB} EL3,4 [rpm]	n_{1maxZB} [rpm]	J_1 [kgcm²]	$\Delta\varphi_2$ [arcmin]	$\Delta\varphi_{2red}$ [arcmin]	C_2 [Nm/arcmin]	m [kg]
PH832KX (n_{1N} = 3000 min^{-1}, $M_{2acc,max}$ = 2100 Nm)																		
25	813	879	117	1.4	PH832_0400KX701_0030 MF EZ502U	1920	1936	3840	120.0	120/1	2100	2100	4000	18	3.5	1.5	440	56
25	813	912	117	1.4	PH832_0400KX701_0030 MF EZ701U	1920	1936	3840	120.0	120/1	2100	2100	4000	21	3.5	1.5	440	58
25	1066	1220	153	1.0	PH832_0400KX701_0030 MF EZ503U	1920	1936	3840	120.0	120/1	2100	2100	4000	20	3.5	1.5	440	57
29	414	452	45	3.5	PH832_0350KX701_0030 MF EZ501U	1539	1539	4200	105.0	105/1	2100	2100	4000	16	3.5	1.5	489	54
29	712	769	78	2.0	PH832_0350KX701_0030 MF EZ502U	2100	2300	4200	105.0	105/1	2100	2100	4000	18	3.5	1.5	489	56
29	712	798	78	2.0	PH832_0350KX701_0030 MF EZ701U	1924	1924	4200	105.0	105/1	2100	2100	4000	21	3.5	1.5	489	58
29	933	1068	102	1.6	PH832_0350KX701_0030 MF EZ503U	2100	2300	4200	105.0	105/1	2100	2100	4000	20	3.5	1.5	489	57
29	1154	1385	126	1.3	PH832_0350KX701_0030 MF EZ702U	2100	2300	4200	105.0	105/1	2100	2100	4000	26	3.5	1.5	489	60
29	1299	1539	141	1.1	PH832_0350KX701_0030 MF EZ505U	2100	2300	4200	105.0	105/1	2100	2100	4000	25	3.5	1.5	489	60
30	394	431	54	4.0	PH832_0500KX701_0020 MF EZ501U	1466	1466	4200	100.0	100/1	1800	1800	3500	18	3.0	1.0	481	54
30	678	733	93	2.3	PH832_0500KX701_0020 MF EZ502U	2100	2300	4200	100.0	100/1	1800	1800	3500	20	3.0	1.0	481	56
30	678	760	93	2.3	PH832_0500KX701_0020 MF EZ701U	1832	1832	4200	100.0	100/1	1800	1800	3500	24	3.0	1.0	481	58
30	889	1017	122	1.8	PH832_0500KX701_0020 MF EZ503U	2100	2300	4200	100.0	100/1	1800	1800	3500	23	3.0	1.0	481	57
30	1099	1319	151	1.4	PH832_0500KX701_0020 MF EZ702U	2100	2300	4200	100.0	100/1	1800	1800	3500	29	3.0	1.0	481	60
30	1237	1466	170	1.3	PH832_0500KX701_0020 MF EZ505U	2100	2300	4200	100.0	100/1	1800	1800	3500	27	3.0	1.0	481	60
30	1511	1905	208	1.0	PH832_0500KX701_0020 MF EZ703U	2100	2300	4200	100.0	100/1	1800	1800	3500	37	3.0	1.0	481	62
36	331	362	48	3.3	PH832_0280KX701_0030 MF EZ501U	1231	1231	3929	84.00	84/1	2100	2100	4000	16	3.5	1.5	451	54
36	569	616	82	1.9	PH832_0280KX701_0030 MF EZ502U	2000	2000	3929	84.00	84/1	2100	2100	4000	18	3.5	1.5	451	56
36	569	639	82	1.9	PH832_0280KX701_0030 MF EZ701U	1539	1539	3929	84.00	84/1	2100	2100	4000	21	3.5	1.5	451	58
36	746	854	107	1.5	PH832_0280KX701_0030 MF EZ503U	2000	2000	3929	84.00	84/1	2100	2100	4000	20	3.5	1.5	451	57
36	923	1108	133	1.2	PH832_0280KX701_0030 MF EZ702U	2000	2000	3929	84.00	84/1	2100	2100	4000	27	3.5	1.5	451	60
36	1039	1231	149	1.1	PH832_0280KX701_0030 MF EZ505U	2000	2000	3929	84.00	84/1	2100	2100	4000	25	3.5	1.5	451	60
38	315	344	61	3.5	PH832_0400KX701_0020 MF EZ501U	1173	1173	3840	80.00	80/1	1800	1800	3500	19	3.5	1.5	440	54
38	542	586	106	2.0	PH832_0400KX701_0020 MF EZ502U	1920	1936	3840	80.00	80/1	1800	1800	3500	21	3.5	1.5	440	56
38	542	608	106	2.0	PH832_0400KX701_0020 MF EZ701U	1466	1466	3840	80.00	80/1	1800	1800	3500	24	3.5	1.5	440	58
38	711	813	138	1.5	PH832_0400KX701_0020 MF EZ503U	1920	1936	3840	80.00	80/1	1800	1800	3500	23	3.5	1.5	440	57
38	879	1055	171	1.3	PH832_0400KX701_0020 MF EZ702U	1920	1936	3840	80.00	80/1	1800	1800	3500	29	3.5	1.5	440	60
38	989	1173	192	1.1	PH832_0400KX701_0020 MF EZ505U	1920	1936	3840	80.00	80/1	1800	1800	3500	28	3.5	1.5	440	60
40	295	323	36	4.4	PH832_0250KX701_0030 MF EZ501U	1099	1099	4200	75.00	75/1	2100	2100	4000	16	3.5	1.5	479	54
40	508	550	62	2.6	PH832_0250KX701_0030 MF EZ502U	2100	2130	4200	75.00	75/1	2100	2100	4000	18	3.5	1.5	479	56
40	508	570	62	2.6	PH832_0250KX701_0030 MF EZ701U	1374	1374	4200	75.00	75/1	2100	2100	4000	21	3.5	1.5	479	58
40	666	763	81	2.0	PH832_0250KX701_0030 MF EZ503U	2100	2300	4200	75.00	75/1	2100	2100	4000	20	3.5	1.5	479	57
40	824	989	100	1.6	PH832_0250KX701_0030 MF EZ702U	2100	2300	4200	75.00	75/1	2100	2100	4000	26	3.5	1.5	479	60
40	928	1099	113	1.4	PH832_0250KX701_0030 MF EZ505U	2100	2300	4200	75.00	75/1	2100	2100	4000	25	3.5	1.5	479	60
40	1134	1429	138	1.1	PH832_0250KX701_0030 MF EZ703U	2100	2300	4200	75.00	75/1	2100	2100	4000	34	3.5	1.5	479	62
43	475	513	70	3.1	PH832_0350KX701_0020 MF EZ502U	1988	1988	4200	70.00	70/1	1800	1800	3500	21	3.5	1.5	489	56
43	475	532	70	3.1	PH832_0350KX701_0020 MF EZ701U	1282	1282	4200	70.00	70/1	1800	1800	3500	24	3.5	1.5	489	58
43	622	712	92	2.3	PH832_0350KX701_0020 MF EZ503U	2100	2300	4200	70.00	70/1	1800	1800	3500	23	3.5	1.5	489	57
43	769	923	114	1.9	PH832_0350KX701_0020 MF EZ702U	2100	2300	4200	70.00	70/1	1800	1800	3500	29	3.5	1.5	489	60
43	866	1026	128	1.7	PH832_0350KX701_0020 MF EZ505U	2100	2300	4200	70.00	70/1	1800	1800	3500	27	3.5	1.5	489	60
43	1058	1334	156	1.4	PH832_0350KX701_0020 MF EZ703U	2100	2300	4200	70.00	70/1	1800	1800	3500	37	3.5	1.5	489	62
43	1366	1937	202	1.1	PH832_0350KX701_0020 MF EZ705U	2100	2300	4200	70.00	70/1	1800	1800	3500	49	3.5	1.5	489	68
50	407	440	51	3.1	PH832_0200KX701_0030 MF EZ502U	1704	1704	4200	60.00	60/1	2100	2100	4000	18	3.5	1.5	462	56
50	407	456	51	3.1	PH832_0200KX701_0030 MF EZ701U	1099	1099	4200	60.00	60/1	2100	2100	4000	21	3.5	1.5	462	58
50	533	610	67	2.3	PH832_0200KX701_0030 MF EZ503U	2100	2300	4200	60.00	60/1	2100	2100	4000	20	3.5	1.5	462	57
50	660	791	83	1.9	PH832_0200KX701_0030 MF EZ702U	2100	2253	4200	60.00	60/1	2100	2100	4000	26	3.5	1.5	462	60
50	742	879	94	1.7	PH832_0200KX701_0030 MF EZ505U	2100	2300	4200	60.00	60/1	2100	2100	4000	25	3.5	1.5	462	60
50	907	1143	115	1.4	PH832_0200KX701_0030 MF EZ703U	2100	2300	4200	60.00	60/1	2100	2100	4000	34	3.5	1.5	462	62
50	1171	1660	148	1.1	PH832_0200KX701_0030 MF EZ705U	2100	2300	4200	60.00	60/1	2100	2100	4000	47	3.5	1.5	462	68
54	221	241	43	5.0	PH832_0280KX701_0020 MF EZ501U	821	821	3929	56.00	56/1	1800	1800	3500	19	3.5	1.5	451	54
54	380	410	74	2.9	PH832_0280KX701_0020 MF EZ502U	1590	1590	3929	56.00	56/1	1800	1800	3500	21	3.5	1.5	451	56
54	380	426	74	2.9	PH832_0280KX701_0020 MF EZ701U	1026	1026	3929	56.00	56/1	1800	1800	3500	24	3.5	1.5	451	58
54	498	569	97	2.2	PH832_0280KX701_0020 MF EZ503U	2000	2000	3929	56.00	56/1	1800	1800	3500	23	3.5	1.5	451	57
54	616	739	120	1.8	PH832_0280KX701_0020 MF EZ702U	2000	2000	3929	56.00	56/1	1800	1800	3500	29	3.5	1.5	451	60
54	693	821	135	1.6	PH832_0280KX701_0020 MF EZ505U	2000	2000	3929	56.00	56/1	1800	1800	3500	28	3.5	1.5	451	60
54	846	1067	165	1.3	PH832_0280KX701_0020 MF EZ703U	2000	2000	3929	56.00	56/1	1800	1800	3500	37	3.5	1.5	451	62
54	1093	1549	213	1.0	PH832_0280KX701_0020 MF EZ705U	2000	2000	3929	56.00	56/1	1800	1800	3500	50	3.5	1.5	451	68
60	339	366	56	3.8	PH832_0250KX701_0020 MF EZ502U	1420	1420	4200	50.00	50/1	1800	1800	3500	21	3.5	1.5	479	56
60	339	380	56	3.8	PH832_0250KX701_0020 MF EZ701U	916	916	4200	50.00	50/1	1800	1800	3500	24	3.5	1.5	479	58
60	444	508	73	2.9	PH832_0250KX701_0020 MF EZ503U	1970	1970	4200	50.00	50/1	1800	1800	3500	23	3.5	1.5	479	57
60	550	660	91	2.4	PH832_0250KX701_0020 MF EZ702U	1878	1878	4200	50.00	50/1	1800	1800	3500	29	3.5	1.5	479	60
60	618	733	102	2.1	PH832_0250KX701_0020 MF EZ505U	2100	2300	4200	50.00	50/1	1800	1800	3500	28	3.5	1.5	479	60
60	756	953	124	1.7	PH832_0250KX701_0020 MF EZ703U	2100	2300	4200	50.00	50/1	1800	1800	3500	37	3.5	1.5	479	62
60	976	1383	161	1.3	PH832_0250KX701_0020 MF EZ705U	2100	2300	4200	50.00	50/1	1800	1800	3500	49	3.5	1.5	479	68

n_{2N} [rpm]	M_{2N} [Nm]	$M_{2,0}$ [Nm]	a_{th}	S	Type	M_{2acc} [Nm]	M_{2accHT} [Nm]	M_{2NOT} [Nm]	i	i_{exakt}	n_{1maxDB} EL1,2,5,6 [rpm]	n_{1maxDB} EL3,4 [rpm]	n_{1maxZB} [rpm]	J_1 [kgcm²]	$\Delta\varphi_2$ [arcmin]	$\Delta\varphi_{2red}$ [arcmin]	C_2 [Nm/arcmin]	m [kg]
PH832KX (n_{1N} = 3000 min^{-1}, $M_{2acc,max}$ = 2100 Nm)																		
63	325	352	47	3.4	PH832_0160KX701_0030 MF EZ502U	1363	1363	3929	48.00	48/1	2100	2100	4000	18	3.5	1.5	415	56
63	325	365	47	3.4	PH832_0160KX701_0030 MF EZ701U	879	879	3929	48.00	48/1	2100	2100	4000	21	3.5	1.5	415	58
63	427	488	61	2.6	PH832_0160KX701_0030 MF EZ503U	1860	1860	3929	48.00	48/1	2100	2100	4000	21	3.5	1.5	415	57
63	528	633	76	2.1	PH832_0160KX701_0030 MF EZ702U	1803	1803	3929	48.00	48/1	2100	2100	4000	27	3.5	1.5	415	60
63	594	704	85	1.9	PH832_0160KX701_0030 MF EZ505U	1860	1860	3929	48.00	48/1	2100	2100	4000	25	3.5	1.5	415	60
63	726	915	104	1.5	PH832_0160KX701_0030 MF EZ703U	1860	1860	3929	48.00	48/1	2100	2100	4000	35	3.5	1.5	415	62
63	937	1328	135	1.2	PH832_0160KX701_0030 MF EZ705U	1860	1860	3929	48.00	48/1	2100	2100	4000	47	3.5	1.5	415	68
75	271	293	46	4.6	PH832_0200KX701_0020 MF EZ502U	1136	1136	4200	40.00	40/1	1800	1800	3500	21	3.5	1.5	462	56
75	271	304	46	4.6	PH832_0200KX701_0020 MF EZ701U	733	733	4200	40.00	40/1	1800	1800	3500	24	3.5	1.5	462	58
75	355	407	61	3.5	PH832_0200KX701_0020 MF EZ503U	1576	1576	4200	40.00	40/1	1800	1800	3500	23	3.5	1.5	462	57
75	440	528	75	2.8	PH832_0200KX701_0020 MF EZ702U	1502	1502	4200	40.00	40/1	1800	1800	3500	29	3.5	1.5	462	60
75	495	586	85	2.5	PH832_0200KX701_0020 MF EZ505U	2100	2300	4200	40.00	40/1	1800	1800	3500	28	3.5	1.5	462	60
75	605	762	104	2.1	PH832_0200KX701_0020 MF EZ703U	2100	2300	4200	40.00	40/1	1800	1800	3500	37	3.5	1.5	462	62
75	780	1107	134	1.6	PH832_0200KX701_0020 MF EZ705U	2100	2300	4200	40.00	40/1	1800	1800	3500	49	3.5	1.5	462	68
94	284	325	55	3.9	PH832_0160KX701_0020 MF EZ503U	1260	1260	3929	32.00	32/1	1800	1800	3500	24	3.5	1.5	415	57
94	352	422	68	3.1	PH832_0160KX701_0020 MF EZ702U	1202	1202	3929	32.00	32/1	1800	1800	3500	30	3.5	1.5	415	60
94	396	469	77	2.8	PH832_0160KX701_0020 MF EZ505U	1860	1860	3929	32.00	32/1	1800	1800	3500	28	3.5	1.5	415	60
94	484	610	94	2.3	PH832_0160KX701_0020 MF EZ703U	1860	1860	3929	32.00	32/1	1800	1800	3500	38	3.5	1.5	415	62
94	624	885	121	1.8	PH832_0160KX701_0020 MF EZ705U	1860	1860	3929	32.00	32/1	1800	1800	3500	50	3.5	1.5	415	68
PH942KX (n_{1N} = 2000 min^{-1}, $M_{2acc,max}$ = 5000 Nm)																		
21	3429	3846	210	1.0	PH942_0480KX701_0020 MF EZ813U	5000	5000	10000	96.00	96/1	1800	1800	3500	120	3.0	1.0	1033	113
24	3000	3365	183	1.2	PH942_0420KX701_0020 MF EZ813U	4883	4883	10000	84.00	84/1	1800	1800	3500	121	3.0	1.0	1035	113
25	2857	3205	191	1.1	PH942_0400KX701_0020 MF EZ813U	4600	4600	9200	80.00	80/1	1800	1800	3500	120	3.5	1.5	998	113
33	2143	2404	164	1.3	PH942_0300KX701_0020 MF EZ813U	3488	3488	8065	60.00	60/1	1800	1800	3500	122	3.5	1.5	988	113
42	1714	1923	164	1.3	PH942_0240KX701_0020 MF EZ813U	2790	2790	6452	48.00	48/1	1800	1800	3500	124	3.5	1.5	932	113
48	1500	1682	154	2.3	PH942_0420KX701_0010 MF EZ813U	4883	4883	9935	42.00	42/1	1800	1600	3000	136	3.0	1.0	1035	113
48	2222	2645	229	1.6	PH942_0420KX701_0010 MF EZ815U	4883	4883	9935	42.00	42/1	1800	1600	3000	199	3.0	1.0	1035	126
50	1429	1602	164	1.3	PH942_0200KX701_0020 MF EZ813U	2325	2325	5376	40.00	40/1	1800	1800	3500	123	3.5	1.5	908	113
56	1286	1442	164	1.3	PH942_0180KX701_0020 MF EZ813U	2093	2093	4839	36.00	36/1	1800	1800	3500	130	3.5	1.5	832	113
63	1143	1282	164	1.3	PH942_0160KX701_0020 MF EZ813U	1860	1860	4301	32.00	32/1	1800	1800	3500	125	3.5	1.5	808	113
67	1072	1202	138	2.6	PH942_0300KX701_0010 MF EZ813U	3488	3488	7097	30.00	30/1	1800	1600	3000	141	3.5	1.5	988	113
67	1587	1890	205	1.8	PH942_0300KX701_0010 MF EZ815U	3488	3488	7097	30.00	30/1	1800	1600	3000	204	3.5	1.5	988	126
83	857	961	164	1.3	PH942_0120KX701_0020 MF EZ813U	1395	1395	3226	24.00	24/1	1800	1800	3500	132	4.0	2.0	655	113
100	714	801	138	2.6	PH942_0200KX701_0010 MF EZ813U	2325	2325	4731	20.00	20/1	1800	1600	3000	143	3.5	1.5	908	113
100	1058	1260	205	1.8	PH942_0200KX701_0010 MF EZ815U	2325	2325	4731	20.00	20/1	1800	1600	3000	206	3.5	1.5	908	126
111	643	721	138	2.6	PH942_0180KX701_0010 MF EZ813U	2093	2093	4258	18.00	18/1	1800	1600	3000	174	3.5	1.5	832	113
111	952	1134	205	1.8	PH942_0180KX701_0010 MF EZ815U	2093	2093	4258	18.00	18/1	1800	1600	3000	237	3.5	1.5	832	126
125	571	641	138	2.6	PH942_0160KX701_0010 MF EZ813U	1860	1860	3785	16.00	16/1	1800	1600	3000	152	3.5	1.5	808	113
125	846	1008	205	1.8	PH942_0160KX701_0010 MF EZ815U	1860	1860	3785	16.00	16/1	1800	1600	3000	215	3.5	1.5	808	126
167	429	481	138	2.6	PH942_0120KX701_0010 MF EZ813U	1395	1395	2839	12.00	12/1	1800	1600	3000	180	4.0	2.0	655	113
167	635	756	205	1.8	PH942_0120KX701_0010 MF EZ815U	1395	1395	2839	12.00	12/1	1800	1600	3000	243	4.0	2.0	655	126
PH942KX (n_{1N} = 3000 min^{-1}, $M_{2acc,max}$ = 5000 Nm)																		
17	709	775	32	4.9	PH942_0600KX701_0030 MF EZ501U	2638	2638	10000	180.0	180/1	2100	2100	4000	16	3.0	1.0	1033	82
17	1220	1319	55	2.9	PH942_0600KX701_0030 MF EZ502U	5000	5000	10000	180.0	180/1	2100	2100	4000	18	3.0	1.0	1033	84
17	1220	1369	55	2.9	PH942_0600KX701_0030 MF EZ701U	3298	3298	10000	180.0	180/1	2100	2100	4000	21	3.0	1.0	1033	86
17	1599	1830	72	2.2	PH942_0600KX701_0030 MF EZ503U	5000	5000	10000	180.0	180/1	2100	2100	4000	20	3.0	1.0	1033	85
17	1979	2374	89	1.8	PH942_0600KX701_0030 MF EZ702U	5000	5000	10000	180.0	180/1	2100	2100	4000	27	3.0	1.0	1033	88
17	2226	2638	100	1.6	PH942_0600KX701_0030 MF EZ505U	5000	5000	10000	180.0	180/1	2100	2100	4000	25	3.0	1.0	1033	88
17	2721	3430	123	1.3	PH942_0600KX701_0030 MF EZ703U	5000	5000	10000	180.0	180/1	2100	2100	4000	34	3.0	1.0	1033	90
21	976	1055	44	3.6	PH942_0480KX701_0030 MF EZ502U	4089	4089	10000	144.0	144/1	2100	2100	4000	18	3.0	1.0	1033	84
21	976	1095	44	3.6	PH942_0480KX701_0030 MF EZ701U	2638	2638	10000	144.0	144/1	2100	2100	4000	21	3.0	1.0	1033	86
21	1280	1464	58	2.7	PH942_0480KX701_0030 MF EZ503U	5000	5000	10000	144.0	144/1	2100	2100	4000	21	3.0	1.0	1033	85
21	1583	1900	71	2.2	PH942_0480KX701_0030 MF EZ702U	5000	5000	10000	144.0	144/1	2100	2100	4000	27	3.0	1.0	1033	88
21	1781	2111	80	2.0	PH942_0480KX701_0030 MF EZ505U	5000	5000	10000	144.0	144/1	2100	2100	4000	25	3.0	1.0	1033	88
21	2177	2744	98	1.6	PH942_0480KX701_0030 MF EZ703U	5000	5000	10000	144.0	144/1	2100	2100	4000	35	3.0	1.0	1033	90
21	2810	3984	127	1.2	PH942_0480KX701_0030 MF EZ705U	5000	5000	10000	144.0	144/1	2100	2100	4000	47	3.0	1.0	1033	96
24	854	923	40	4.0	PH942_0420KX701_0030 MF EZ502U	3578	3578	10000	126.0	126/1	2100	2100	4000	18	3.0	1.0	1035	84
24	854	958	40	4.0	PH942_0420KX701_0030 MF EZ701U	2308	2308	10000	126.0	126/1	2100	2100	4000	22	3.0	1.0	1035	86
24	1120	1281	52	3.0	PH942_0420KX701_0030 MF EZ503U	4883	4883	10000	126.0	126/1	2100	2100	4000	21	3.0	1.0	1035	85
24	1385	1662	64	2.5	PH942_0420KX701_0030 MF EZ702U	4732	4732	10000	126.0	126/1	2100	2100	4000	27	3.0	1.0	1035	88
24	1558	1847	72	2.2	PH942_0420KX701_0030 MF EZ505U	4883	4883	10000	126.0	126/1	2100	2100	4000	25	3.0	1.0	1035	88
24	1904	2401	88	1.8	PH942_0420KX701_0030 MF EZ703U	4883	4883	10000	126.0	126/1	2100	2100	4000	35	3.0	1.0	1035	90
24	2458	3486	114	1.4	PH942_0420KX701_0030 MF EZ705U	4883	4883	10000	126.0	126/1	2100	2100	4000	47	3.0	1.0	1035	96
25	813	879	50	4.3	PH942_0600KX701_0020 MF EZ502U	3408	3408	10000	120.0	120/1	1800	1800	3500	21	3.0	1.0	1033	84

n_{2N} [rpm]	M_{2N} [Nm]	$M_{2,0}$ [Nm]	a_{th}	S	Type	M_{2acc} [Nm]	M_{2accHT} [Nm]	M_{2NOT} [Nm]	i	i_{exakt}	n_{1maxDB} EL1,2,5,6 [rpm]	n_{1maxDB} EL3,4 [rpm]	n_{1maxZB} [rpm]	J_1 [kgcm²]	$\Delta\varphi_2$ [arcmin]	$\Delta\varphi_{2red}$ [arcmin]	C_2 [Nm/arcmin]	m [kg]
PH942KX (n_{1N} = 3000 min^{-1}, $M_{2acc,max}$ = 5000 Nm)																		
25	813	912	50	4.3	PH942_0600KX701_0020 MF EZ701U	2199	2199	10000	120.0	120/1	1800	1800	3500	24	3.0	1.0	1033	86
25	1066	1220	65	3.3	PH942_0600KX701_0020 MF EZ503U	4727	4727	10000	120.0	120/1	1800	1800	3500	23	3.0	1.0	1033	85
25	1319	1583	81	2.7	PH942_0600KX701_0020 MF EZ702U	4507	4507	10000	120.0	120/1	1800	1800	3500	29	3.0	1.0	1033	88
25	1484	1759	91	2.4	PH942_0600KX701_0020 MF EZ505U	5000	5000	10000	120.0	120/1	1800	1800	3500	28	3.0	1.0	1033	88
25	1814	2286	111	1.9	PH942_0600KX701_0020 MF EZ703U	5000	5000	10000	120.0	120/1	1800	1800	3500	37	3.0	1.0	1033	90
25	2341	3320	143	1.5	PH942_0600KX701_0020 MF EZ705U	5000	5000	10000	120.0	120/1	1800	1800	3500	50	3.0	1.0	1033	96
31	853	976	52	4.1	PH942_0480KX701_0020 MF EZ503U	3781	3781	10000	96.00	96/1	1800	1800	3500	24	3.0	1.0	1033	85
31	1055	1266	65	3.3	PH942_0480KX701_0020 MF EZ702U	3606	3606	10000	96.00	96/1	1800	1800	3500	30	3.0	1.0	1033	88
31	1187	1407	73	2.9	PH942_0480KX701_0020 MF EZ505U	5000	5000	10000	96.00	96/1	1800	1800	3500	28	3.0	1.0	1033	88
31	1451	1829	89	2.4	PH942_0480KX701_0020 MF EZ703U	5000	5000	10000	96.00	96/1	1800	1800	3500	38	3.0	1.0	1033	90
31	1873	2656	115	1.9	PH942_0480KX701_0020 MF EZ705U	5000	5000	10000	96.00	96/1	1800	1800	3500	50	3.0	1.0	1033	96
33	610	660	40	4.0	PH942_0300KX701_0030 MF EZ502U	2556	2556	8065	90.00	90/1	2100	2100	4000	19	3.5	1.5	988	84
33	610	684	40	4.0	PH942_0300KX701_0030 MF EZ701U	1649	1649	8065	90.00	90/1	2100	2100	4000	22	3.5	1.5	988	86
33	800	915	52	3.0	PH942_0300KX701_0030 MF EZ503U	3488	3488	8065	90.00	90/1	2100	2100	4000	21	3.5	1.5	988	85
33	989	1187	64	2.5	PH942_0300KX701_0030 MF EZ702U	3380	3380	8065	90.00	90/1	2100	2100	4000	27	3.5	1.5	988	88
33	1113	1319	72	2.2	PH942_0300KX701_0030 MF EZ505U	3488	3488	8065	90.00	90/1	2100	2100	4000	26	3.5	1.5	988	88
33	1360	1715	88	1.8	PH942_0300KX701_0030 MF EZ703U	3488	3488	8065	90.00	90/1	2100	2100	4000	35	3.5	1.5	988	90
33	1756	2490	114	1.4	PH942_0300KX701_0030 MF EZ705U	3488	3488	8065	90.00	90/1	2100	2100	4000	48	3.5	1.5	988	96
36	746	854	47	4.6	PH942_0420KX701_0020 MF EZ503U	3309	3309	10000	84.00	84/1	1800	1800	3500	24	3.0	1.0	1035	85
36	923	1108	58	3.7	PH942_0420KX701_0020 MF EZ702U	3155	3155	10000	84.00	84/1	1800	1800	3500	30	3.0	1.0	1035	88
36	1039	1231	65	3.3	PH942_0420KX701_0020 MF EZ505U	4883	4883	10000	84.00	84/1	1800	1800	3500	28	3.0	1.0	1035	88
36	1270	1601	80	2.7	PH942_0420KX701_0020 MF EZ703U	4883	4883	10000	84.00	84/1	1800	1800	3500	38	3.0	1.0	1035	90
36	1639	2324	103	2.1	PH942_0420KX701_0020 MF EZ705U	4883	4883	10000	84.00	84/1	1800	1800	3500	50	3.0	1.0	1035	96
38	711	813	48	4.5	PH942_0400KX701_0020 MF EZ503U	3151	3151	9200	80.00	80/1	1800	1800	3500	23	3.5	1.5	998	85
38	879	1055	59	3.6	PH942_0400KX701_0020 MF EZ702U	3005	3005	9200	80.00	80/1	1800	1800	3500	29	3.5	1.5	998	88
38	989	1173	66	3.2	PH942_0400KX701_0020 MF EZ505U	4600	4600	9200	80.00	80/1	1800	1800	3500	28	3.5	1.5	998	88
38	1209	1524	81	2.6	PH942_0400KX701_0020 MF EZ703U	4600	4600	9200	80.00	80/1	1800	1800	3500	37	3.5	1.5	998	90
38	1561	2213	104	2.1	PH942_0400KX701_0020 MF EZ705U	4600	4600	9200	80.00	80/1	1800	1800	3500	50	3.5	1.5	998	96
42	488	528	40	4.0	PH942_0240KX701_0030 MF EZ502U	2045	2045	6452	72.00	72/1	2100	2100	4000	20	3.5	1.5	932	84
42	488	547	40	4.0	PH942_0240KX701_0030 MF EZ701U	1319	1319	6452	72.00	72/1	2100	2100	4000	23	3.5	1.5	932	86
42	640	732	52	3.0	PH942_0240KX701_0030 MF EZ503U	2790	2790	6452	72.00	72/1	2100	2100	4000	22	3.5	1.5	932	85
42	791	950	64	2.5	PH942_0240KX701_0030 MF EZ702U	2704	2704	6452	72.00	72/1	2100	2100	4000	28	3.5	1.5	932	88
42	890	1055	72	2.2	PH942_0240KX701_0030 MF EZ505U	2790	2790	6452	72.00	72/1	2100	2100	4000	27	3.5	1.5	932	88
42	1088	1372	88	1.8	PH942_0240KX701_0030 MF EZ703U	2790	2790	6452	72.00	72/1	2100	2100	4000	36	3.5	1.5	932	90
42	1405	1992	114	1.4	PH942_0240KX701_0030 MF EZ705U	2790	2790	6452	72.00	72/1	2100	2100	4000	49	3.5	1.5	932	96
50	533	610	47	4.6	PH942_0300KX701_0020 MF EZ503U	2363	2363	8065	60.00	60/1	1800	1800	3500	25	3.5	1.5	988	85
50	660	791	58	3.7	PH942_0300KX701_0020 MF EZ702U	2253	2253	8065	60.00	60/1	1800	1800	3500	31	3.5	1.5	988	88
50	742	879	65	3.3	PH942_0300KX701_0020 MF EZ505U	3488	3488	8065	60.00	60/1	1800	1800	3500	30	3.5	1.5	988	88
50	907	1143	80	2.7	PH942_0300KX701_0020 MF EZ703U	3488	3488	8065	60.00	60/1	1800	1800	3500	39	3.5	1.5	988	90
50	1171	1660	103	2.1	PH942_0300KX701_0020 MF EZ705U	3488	3488	8065	60.00	60/1	1800	1800	3500	52	3.5	1.5	988	96
56	366	396	40	4.0	PH942_0180KX701_0030 MF EZ502U	1533	1533	4839	54.00	54/1	2100	2100	4000	23	3.5	1.5	832	84
56	366	411	40	4.0	PH942_0180KX701_0030 MF EZ701U	989	989	4839	54.00	54/1	2100	2100	4000	26	3.5	1.5	832	86
56	480	549	52	3.0	PH942_0180KX701_0030 MF EZ503U	2093	2093	4839	54.00	54/1	2100	2100	4000	25	3.5	1.5	832	85
56	594	712	64	2.5	PH942_0180KX701_0030 MF EZ702U	2028	2028	4839	54.00	54/1	2100	2100	4000	31	3.5	1.5	832	88
56	668	791	72	2.2	PH942_0180KX701_0030 MF EZ505U	2093	2093	4839	54.00	54/1	2100	2100	4000	30	3.5	1.5	832	88
56	816	1029	88	1.8	PH942_0180KX701_0030 MF EZ703U	2093	2093	4839	54.00	54/1	2100	2100	4000	39	3.5	1.5	832	90
56	1054	1494	114	1.4	PH942_0180KX701_0030 MF EZ705U	2093	2093	4839	54.00	54/1	2100	2100	4000	51	3.5	1.5	832	96
63	427	488	47	4.6	PH942_0240KX701_0020 MF EZ503U	1891	1891	6452	48.00	48/1	1800	1800	3500	27	3.5	1.5	932	85
63	528	633	58	3.7	PH942_0240KX701_0020 MF EZ702U	1803	1803	6452	48.00	48/1	1800	1800	3500	33	3.5	1.5	932	88
63	594	704	65	3.3	PH942_0240KX701_0020 MF EZ505U	2790	2790	6452	48.00	48/1	1800	1800	3500	32	3.5	1.5	932	88
63	726	915	80	2.7	PH942_0240KX701_0020 MF EZ703U	2790	2790	6452	48.00	48/1	1800	1800	3500	41	3.5	1.5	932	90
63	937	1328	103	2.1	PH942_0240KX701_0020 MF EZ705U	2790	2790	6452	48.00	48/1	1800	1800	3500	54	3.5	1.5	932	96
71	819	1162	86	4.2	PH942_0420KX701_0010 MF EZ705U	4001	4001	9935	42.00	42/1	1800	1600	3000	65	3.0	1.0	1035	96
75	355	407	47	4.6	PH942_0200KX701_0020 MF EZ503U	1576	1576	5376	40.00	40/1	1800	1800	3500	26	3.5	1.5	908	85
75	440	528	58	3.7	PH942_0200KX701_0020 MF EZ702U	1502	1502	5376	40.00	40/1	1800	1800	3500	32	3.5	1.5	908	88
75	495	586	65	3.3	PH942_0200KX701_0020 MF EZ505U	2325	2325	5376	40.00	40/1	1800	1800	3500	30	3.5	1.5	908	88
75	605	762	80	2.7	PH942_0200KX701_0020 MF EZ703U	2325	2325	5376	40.00	40/1	1800	1800	3500	40	3.5	1.5	908	90
75	780	1107	103	2.1	PH942_0200KX701_0020 MF EZ705U	2325	2325	5376	40.00	40/1	1800	1800	3500	52	3.5	1.5	908	96
83	320	366	47	4.6	PH942_0180KX701_0020 MF EZ503U	1418	1418	4839	36.00	36/1	1800	1800	3500	34	3.5	1.5	832	85
83	396	475	58	3.7	PH942_0180KX701_0020 MF EZ702U	1352	1352	4839	36.00	36/1	1800	1800	3500	40	3.5	1.5	832	88
83	445	528	65	3.3	PH942_0180KX701_0020 MF EZ505U	2093	2093	4839	36.00	36/1	1800	1800	3500	38	3.5	1.5	832	88
83	544	686	80	2.7	PH942_0180KX701_0020 MF EZ703U	2093	2093	4839	36.00	36/1	1800	1800	3500	48	3.5	1.5	832	90
83	702	996	103	2.1	PH942_0180KX701_0020 MF EZ705U	2093	2093	4839	36.00	36/1	1800	1800	3500	60	3.5	1.5	832	96
94	284	325	47	4.6	PH942_0160KX701_0020 MF EZ503U	1260	1260	4301	32.00	32/1	1800	1800	3500	28	3.5	1.5	808	85

n_{2N} [rpm]	M_{2N} [Nm]	$M_{2,0}$ [Nm]	a_{th}	S	Type	M_{2acc} [Nm]	M_{2accHT} [Nm]	M_{2NOT} [Nm]	i	i_{exakt}	n_{1maxDB} EL1,2,5,6 [rpm]	n_{1maxDB} EL3,4 [rpm]	n_{1maxZB} [rpm]	J_1 [kgcm²]	$\Delta\varphi_2$ [arcmin]	$\Delta\varphi_{2red}$ [arcmin]	C_2 [Nm/arcmin]	m [kg]
PH942KX (n_{1N} = 3000 min^{-1}, $M_{2acc,max}$ = 5000 Nm)																		
94	352	422	58	3.7	PH942_0160KX701_0020 MF EZ702U	1202	1202	4301	32.00	32/1	1800	1800	3500	34	3.5	1.5	808	88
94	396	469	65	3.3	PH942_0160KX701_0020 MF EZ505U	1860	1860	4301	32.00	32/1	1800	1800	3500	33	3.5	1.5	808	88
94	484	610	80	2.7	PH942_0160KX701_0020 MF EZ703U	1860	1860	4301	32.00	32/1	1800	1800	3500	42	3.5	1.5	808	90
94	624	885	103	2.1	PH942_0160KX701_0020 MF EZ705U	1860	1860	4301	32.00	32/1	1800	1800	3500	54	3.5	1.5	808	96
100	585	830	86	4.2	PH942_0300KX701_0010 MF EZ705U	2858	2858	7097	30.00	30/1	1800	1600	3000	71	3.5	1.5	988	96
125	213	244	47	4.6	PH942_0120KX701_0020 MF EZ503U	945	945	3226	24.00	24/1	1800	1800	3500	35	4.0	2.0	655	85
125	264	317	58	3.7	PH942_0120KX701_0020 MF EZ702U	901	901	3226	24.00	24/1	1800	1800	3500	41	4.0	2.0	655	88
125	297	352	65	3.3	PH942_0120KX701_0020 MF EZ505U	1395	1395	3226	24.00	24/1	1800	1800	3500	40	4.0	2.0	655	88
125	363	457	80	2.7	PH942_0120KX701_0020 MF EZ703U	1395	1395	3226	24.00	24/1	1800	1800	3500	49	4.0	2.0	655	90
125	468	664	103	2.1	PH942_0120KX701_0020 MF EZ705U	1395	1395	3226	24.00	24/1	1800	1800	3500	61	4.0	2.0	655	96
150	390	553	86	4.2	PH942_0200KX701_0010 MF EZ705U	1905	1905	4731	20.00	20/1	1800	1600	3000	73	3.5	1.5	908	96
167	351	498	86	4.2	PH942_0180KX701_0010 MF EZ705U	1715	1715	4258	18.00	18/1	1800	1600	3000	104	3.5	1.5	832	96
188	312	443	86	4.2	PH942_0160KX701_0010 MF EZ705U	1524	1524	3785	16.00	16/1	1800	1600	3000	82	3.5	1.5	808	96
250	234	332	86	4.2	PH942_0120KX701_0010 MF EZ705U	1143	1143	2839	12.00	12/1	1800	1600	3000	110	4.0	2.0	655	96
PH942KX (n_{1N} = 4000 min^{-1}, $M_{2acc,max}$ = 5000 Nm)																		
28	3324	5765	150	1.1	PH942_0480KX701_0030 MF EZ813U	5000	5000	10000	144.0	144/1	2100	2100	4000	117	3.0	1.0	1033	113
28	3444	8857	155	1.0	PH942_0480KX701_0030 MF EZ815U	5000	5000	10000	144.0	144/1	2100	2100	4000	180	3.0	1.0	1033	126
32	2909	5044	148	1.1	PH942_0420KX701_0030 MF EZ813U	4883	4883	10000	126.0	126/1	2100	2100	4000	118	3.0	1.0	1035	113
32	3014	7749	153	1.0	PH942_0420KX701_0030 MF EZ815U	4883	4883	10000	126.0	126/1	2100	2100	4000	181	3.0	1.0	1035	126
44	2078	3603	148	1.1	PH942_0300KX701_0030 MF EZ813U	3488	3488	8065	90.00	90/1	2100	2100	4000	118	3.5	1.5	988	113
44	2153	5535	153	1.0	PH942_0300KX701_0030 MF EZ815U	3488	3488	8065	90.00	90/1	2100	2100	4000	181	3.5	1.5	988	126
56	1662	2882	148	1.1	PH942_0240KX701_0030 MF EZ813U	2790	2790	6452	72.00	72/1	2100	2100	4000	119	3.5	1.5	932	113
56	1722	4428	153	1.0	PH942_0240KX701_0030 MF EZ815U	2790	2790	6452	72.00	72/1	2100	2100	4000	182	3.5	1.5	932	126
74	1247	2162	148	1.1	PH942_0180KX701_0030 MF EZ813U	2093	2093	4839	54.00	54/1	2100	2100	4000	122	3.5	1.5	832	113
74	1292	3321	153	1.0	PH942_0180KX701_0030 MF EZ815U	2093	2093	4839	54.00	54/1	2100	2100	4000	185	3.5	1.5	832	126
PH1042KX (n_{1N} = 2000 min^{-1}, $M_{2acc,max}$ = 6980 Nm)																		
17	4286	4807	187	1.1	PH1042_0600KX701_0020 MF EZ813U	6975	–	14000	120.0	120/1	1800	1800	3500	120	3.0	–	1542	129
24	3000	3365	164	1.3	PH1042_0420KX701_0020 MF EZ813U	4883	–	11290	84.00	84/1	1800	1800	3500	121	3.0	–	1545	129
33	2143	2404	164	1.3	PH1042_0300KX701_0020 MF EZ813U	3488	–	8065	60.00	60/1	1800	1800	3500	122	3.5	–	1444	129
42	1714	1923	164	1.3	PH1042_0240KX701_0020 MF EZ813U	2790	–	6452	48.00	48/1	1800	1800	3500	124	3.5	–	1328	129
48	1500	1682	138	2.6	PH1042_0420KX701_0010 MF EZ813U	4883	–	9935	42.00	42/1	1800	1600	3000	136	3.0	–	1545	129
48	2222	2645	205	1.8	PH1042_0420KX701_0010 MF EZ815U	4883	–	9935	42.00	42/1	1800	1600	3000	199	3.0	–	1545	141
56	1286	1442	164	1.3	PH1042_0180KX701_0020 MF EZ813U	2093	–	4839	36.00	36/1	1800	1800	3500	131	3.5	–	1127	129
67	1072	1202	138	2.6	PH1042_0300KX701_0010 MF EZ813U	3488	–	7097	30.00	30/1	1800	1600	3000	142	3.5	–	1444	129
67	1587	1890	205	1.8	PH1042_0300KX701_0010 MF EZ815U	3488	–	7097	30.00	30/1	1800	1600	3000	205	3.5	–	1444	141
83	857	961	138	2.6	PH1042_0240KX701_0010 MF EZ813U	2790	–	5677	24.00	24/1	1800	1600	3000	150	3.5	–	1328	129
83	1270	1512	205	1.8	PH1042_0240KX701_0010 MF EZ815U	2790	–	5677	24.00	24/1	1800	1600	3000	213	3.5	–	1328	141
111	643	721	138	2.6	PH1042_0180KX701_0010 MF EZ813U	2093	–	4258	18.00	18/1	1800	1600	3000	176	3.5	–	1127	129
111	952	1134	205	1.8	PH1042_0180KX701_0010 MF EZ815U	2093	–	4258	18.00	18/1	1800	1600	3000	239	3.5	–	1127	141
PH1042KX (n_{1N} = 3000 min^{-1}, $M_{2acc,max}$ = 6980 Nm)																		
17	1220	1319	40	4.0	PH1042_0600KX701_0030 MF EZ502U	5112	–	14000	180.0	180/1	2100	2100	4000	18	3.0	–	1542	99
17	1220	1369	40	4.0	PH1042_0600KX701_0030 MF EZ701U	3298	–	14000	180.0	180/1	2100	2100	4000	21	3.0	–	1542	101
17	1599	1830	52	3.0	PH1042_0600KX701_0030 MF EZ503U	6975	–	14000	180.0	180/1	2100	2100	4000	20	3.0	–	1542	101
17	1979	2374	64	2.5	PH1042_0600KX701_0030 MF EZ702U	6760	–	14000	180.0	180/1	2100	2100	4000	27	3.0	–	1542	104
17	2226	2638	72	2.2	PH1042_0600KX701_0030 MF EZ505U	6975	–	14000	180.0	180/1	2100	2100	4000	25	3.0	–	1542	104
17	2721	3430	88	1.8	PH1042_0600KX701_0030 MF EZ703U	6975	–	14000	180.0	180/1	2100	2100	4000	34	3.0	–	1542	106
17	3512	4980	114	1.4	PH1042_0600KX701_0030 MF EZ705U	6975	–	14000	180.0	180/1	2100	2100	4000	47	3.0	–	1542	111
24	854	923	40	4.0	PH1042_0420KX701_0030 MF EZ502U	3578	–	11290	126.0	126/1	2100	2100	4000	18	3.0	–	1545	99
24	854	958	40	4.0	PH1042_0420KX701_0030 MF EZ701U	2308	–	11290	126.0	126/1	2100	2100	4000	22	3.0	–	1545	101
24	1120	1281	52	3.0	PH1042_0420KX701_0030 MF EZ503U	4883	–	11290	126.0	126/1	2100	2100	4000	21	3.0	–	1545	101
24	1385	1662	64	2.5	PH1042_0420KX701_0030 MF EZ702U	4732	–	11290	126.0	126/1	2100	2100	4000	27	3.0	–	1545	104
24	1558	1847	72	2.2	PH1042_0420KX701_0030 MF EZ505U	4883	–	11290	126.0	126/1	2100	2100	4000	25	3.0	–	1545	104
24	1904	2401	88	1.8	PH1042_0420KX701_0030 MF EZ703U	4883	–	11290	126.0	126/1	2100	2100	4000	35	3.0	–	1545	106
24	2458	3486	114	1.4	PH1042_0420KX701_0030 MF EZ705U	4883	–	11290	126.0	126/1	2100	2100	4000	47	3.0	–	1545	111
25	1066	1220	47	4.6	PH1042_0600KX701_0020 MF EZ503U	4727	–	14000	120.0	120/1	1800	1800	3500	23	3.0	–	1542	101
25	1319	1583	58	3.7	PH1042_0600KX701_0020 MF EZ702U	4507	–	14000	120.0	120/1	1800	1800	3500	29	3.0	–	1542	104
25	1484	1759	65	3.3	PH1042_0600KX701_0020 MF EZ505U	6975	–	14000	120.0	120/1	1800	1800	3500	28	3.0	–	1542	104
25	1814	2286	80	2.7	PH1042_0600KX701_0020 MF EZ703U	6975	–	14000	120.0	120/1	1800	1800	3500	37	3.0	–	1542	106
25	2341	3320	103	2.1	PH1042_0600KX701_0020 MF EZ705U	6975	–	14000	120.0	120/1	1800	1800	3500	50	3.0	–	1542	111
33	610	660	40	4.0	PH1042_0300KX701_0030 MF EZ502U	2556	–	8065	90.00	90/1	2100	2100	4000	19	3.5	–	1444	99
33	610	684	40	4.0	PH1042_0300KX701_0030 MF EZ701U	1649	–	8065	90.00	90/1	2100	2100	4000	22	3.5	–	1444	101
33	800	915	52	3.0	PH1042_0300KX701_0030 MF EZ503U	3488	–	8065	90.00	90/1	2100	2100	4000	21	3.5	–	1444	101
33	989	1187	64	2.5	PH1042_0300KX701_0030 MF EZ702U	3380	–	8065	90.00	90/1	2100	2100	4000	28	3.5	–	1444	104

n_{2N} [rpm]	M_{2N} [Nm]	$M_{2,0}$ [Nm]	a_{th}	S	Type	M_{2acc} [Nm]	M_{2accHT} [Nm]	M_{2NOT} [Nm]	i	i_{exakt}	n_{1maxDB} EL1,2,5,6 [rpm]	n_{1maxDB} EL3,4 [rpm]	n_{1maxZB} [rpm]	J_1 [kgcm²]	$\Delta\varphi_2$ [arcmin]	$\Delta\varphi_{2red}$ [arcmin]	C_2 [Nm/arcmin]	m [kg]
PH1042KX (n_{1N} = 3000 min^{-1}, $M_{2acc,max}$ = 6980 Nm)																		
33	1113	1319	72	2.2	PH1042_0300KX701_0030 MF EZ505U	3488	–	8065	90.00	90/1	2100	2100	4000	26	3.5	–	1444	104
33	1360	1715	88	1.8	PH1042_0300KX701_0030 MF EZ703U	3488	–	8065	90.00	90/1	2100	2100	4000	35	3.5	–	1444	106
33	1756	2490	114	1.4	PH1042_0300KX701_0030 MF EZ705U	3488	–	8065	90.00	90/1	2100	2100	4000	48	3.5	–	1444	111
36	746	854	47	4.6	PH1042_0420KX701_0020 MF EZ503U	3309	–	11290	84.00	84/1	1800	1800	3500	24	3.0	–	1545	101
36	923	1108	58	3.7	PH1042_0420KX701_0020 MF EZ702U	3155	–	11290	84.00	84/1	1800	1800	3500	30	3.0	–	1545	104
36	1039	1231	65	3.3	PH1042_0420KX701_0020 MF EZ505U	4883	–	11290	84.00	84/1	1800	1800	3500	29	3.0	–	1545	104
36	1270	1601	80	2.7	PH1042_0420KX701_0020 MF EZ703U	4883	–	11290	84.00	84/1	1800	1800	3500	38	3.0	–	1545	106
36	1639	2324	103	2.1	PH1042_0420KX701_0020 MF EZ705U	4883	–	11290	84.00	84/1	1800	1800	3500	50	3.0	–	1545	111
42	488	528	40	4.0	PH1042_0240KX701_0030 MF EZ502U	2045	–	6452	72.00	72/1	2100	2100	4000	20	3.5	–	1328	99
42	488	547	40	4.0	PH1042_0240KX701_0030 MF EZ701U	1319	–	6452	72.00	72/1	2100	2100	4000	23	3.5	–	1328	101
42	640	732	52	3.0	PH1042_0240KX701_0030 MF EZ503U	2790	–	6452	72.00	72/1	2100	2100	4000	22	3.5	–	1328	101
42	791	950	64	2.5	PH1042_0240KX701_0030 MF EZ702U	2704	–	6452	72.00	72/1	2100	2100	4000	28	3.5	–	1328	104
42	890	1055	72	2.2	PH1042_0240KX701_0030 MF EZ505U	2790	–	6452	72.00	72/1	2100	2100	4000	27	3.5	–	1328	104
42	1088	1372	88	1.8	PH1042_0240KX701_0030 MF EZ703U	2790	–	6452	72.00	72/1	2100	2100	4000	36	3.5	–	1328	106
42	1405	1992	114	1.4	PH1042_0240KX701_0030 MF EZ705U	2790	–	6452	72.00	72/1	2100	2100	4000	49	3.5	–	1328	111
50	533	610	47	4.6	PH1042_0300KX701_0020 MF EZ503U	2363	–	8065	60.00	60/1	1800	1800	3500	25	3.5	–	1444	101
50	660	791	58	3.7	PH1042_0300KX701_0020 MF EZ702U	2253	–	8065	60.00	60/1	1800	1800	3500	32	3.5	–	1444	104
50	742	879	65	3.3	PH1042_0300KX701_0020 MF EZ505U	3488	–	8065	60.00	60/1	1800	1800	3500	30	3.5	–	1444	104
50	907	1143	80	2.7	PH1042_0300KX701_0020 MF EZ703U	3488	–	8065	60.00	60/1	1800	1800	3500	39	3.5	–	1444	106
50	1171	1660	103	2.1	PH1042_0300KX701_0020 MF EZ705U	3488	–	8065	60.00	60/1	1800	1800	3500	52	3.5	–	1444	111
56	366	396	40	4.0	PH1042_0180KX701_0030 MF EZ502U	1533	–	4839	54.00	54/1	2100	2100	4000	23	3.5	–	1127	99
56	366	411	40	4.0	PH1042_0180KX701_0030 MF EZ701U	989	–	4839	54.00	54/1	2100	2100	4000	26	3.5	–	1127	101
56	480	549	52	3.0	PH1042_0180KX701_0030 MF EZ503U	2093	–	4839	54.00	54/1	2100	2100	4000	25	3.5	–	1127	101
56	594	712	64	2.5	PH1042_0180KX701_0030 MF EZ702U	2028	–	4839	54.00	54/1	2100	2100	4000	31	3.5	–	1127	104
56	668	791	72	2.2	PH1042_0180KX701_0030 MF EZ505U	2093	–	4839	54.00	54/1	2100	2100	4000	30	3.5	–	1127	104
56	816	1029	88	1.8	PH1042_0180KX701_0030 MF EZ703U	2093	–	4839	54.00	54/1	2100	2100	4000	39	3.5	–	1127	106
56	1054	1494	114	1.4	PH1042_0180KX701_0030 MF EZ705U	2093	–	4839	54.00	54/1	2100	2100	4000	52	3.5	–	1127	111
63	427	488	47	4.6	PH1042_0240KX701_0020 MF EZ503U	1891	–	6452	48.00	48/1	1800	1800	3500	27	3.5	–	1328	101
63	528	633	58	3.7	PH1042_0240KX701_0020 MF EZ702U	1803	–	6452	48.00	48/1	1800	1800	3500	34	3.5	–	1328	104
63	594	704	65	3.3	PH1042_0240KX701_0020 MF EZ505U	2790	–	6452	48.00	48/1	1800	1800	3500	32	3.5	–	1328	104
63	726	915	80	2.7	PH1042_0240KX701_0020 MF EZ703U	2790	–	6452	48.00	48/1	1800	1800	3500	41	3.5	–	1328	106
63	937	1328	103	2.1	PH1042_0240KX701_0020 MF EZ705U	2790	–	6452	48.00	48/1	1800	1800	3500	54	3.5	–	1328	111
71	819	1162	86	4.2	PH1042_0420KX701_0010 MF EZ705U	4001	–	9935	42.00	42/1	1800	1600	3000	65	3.0	–	1545	111
83	320	366	47	4.6	PH1042_0180KX701_0020 MF EZ503U	1418	–	4839	36.00	36/1	1800	1800	3500	34	3.5	–	1127	101
83	396	475	58	3.7	PH1042_0180KX701_0020 MF EZ702U	1352	–	4839	36.00	36/1	1800	1800	3500	40	3.5	–	1127	104
83	445	528	65	3.3	PH1042_0180KX701_0020 MF EZ505U	2093	–	4839	36.00	36/1	1800	1800	3500	39	3.5	–	1127	104
83	544	686	80	2.7	PH1042_0180KX701_0020 MF EZ703U	2093	–	4839	36.00	36/1	1800	1800	3500	48	3.5	–	1127	106
83	702	996	103	2.1	PH1042_0180KX701_0020 MF EZ705U	2093	–	4839	36.00	36/1	1800	1800	3500	60	3.5	–	1127	111
100	585	830	86	4.2	PH1042_0300KX701_0010 MF EZ705U	2858	–	7097	30.00	30/1	1800	1600	3000	72	3.5	–	1444	111
125	468	664	86	4.2	PH1042_0240KX701_0010 MF EZ705U	2286	–	5677	24.00	24/1	1800	1600	3000	79	3.5	–	1328	111
167	351	498	86	4.2	PH1042_0180KX701_0010 MF EZ705U	1715	–	4258	18.00	18/1	1800	1600	3000	106	3.5	–	1127	111
PH1042KX (n_{1N} = 4000 min^{-1}, $M_{2acc,max}$ = 6980 Nm)																		
22	4155	7206	148	1.1	PH1042_0600KX701_0030 MF EZ813U	6975	–	14000	180.0	180/1	2100	2100	4000	117	3.0	–	1542	129
22	4305	11071	153	1.0	PH1042_0600KX701_0030 MF EZ815U	6975	–	14000	180.0	180/1	2100	2100	4000	180	3.0	–	1542	141
32	2909	5044	148	1.1	PH1042_0420KX701_0030 MF EZ813U	4883	–	11290	126.0	126/1	2100	2100	4000	118	3.0	–	1545	129
32	3014	7749	153	1.0	PH1042_0420KX701_0030 MF EZ815U	4883	–	11290	126.0	126/1	2100	2100	4000	181	3.0	–	1545	141
44	2078	3603	148	1.1	PH1042_0300KX701_0030 MF EZ813U	3488	–	8065	90.00	90/1	2100	2100	4000	118	3.5	–	1444	129
44	2153	5535	153	1.0	PH1042_0300KX701_0030 MF EZ815U	3488	–	8065	90.00	90/1	2100	2100	4000	181	3.5	–	1444	141
56	1662	2882	148	1.1	PH1042_0240KX701_0030 MF EZ813U	2790	–	6452	72.00	72/1	2100	2100	4000	119	3.5	–	1328	129
56	1722	4428	153	1.0	PH1042_0240KX701_0030 MF EZ815U	2790	–	6452	72.00	72/1	2100	2100	4000	182	3.5	–	1328	141
74	1247	2162	148	1.1	PH1042_0180KX701_0030 MF EZ813U	2093	–	4839	54.00	54/1	2100	2100	4000	122	3.5	–	1127	129
74	1292	3321	153	1.0	PH1042_0180KX701_0030 MF EZ815U	2093	–	4839	54.00	54/1	2100	2100	4000	185	3.5	–	1127	141

12.3 Dimensional drawings

In this chapter you can find the dimensions of the geared motors.

There is a dimensional drawing for every possible shaft/housing design, each with the tables for gearbox dimensions, motor dimensions and geared motor dimensions.

Dimensions can exceed the specifications of ISO 2768-mK due to casting tolerances or accumulation of individual tolerances.

We reserve the right to make dimensional changes due to ongoing technical development.

You can download 3D models of our standard drives at https://configurator.stoeber.de/en-US/.

Combination options and the dimensions of forced ventilated geared motors can also be found at https://configurator.stoeber.de/en-US/.

12.3.1 F shaft design (flange shaft)

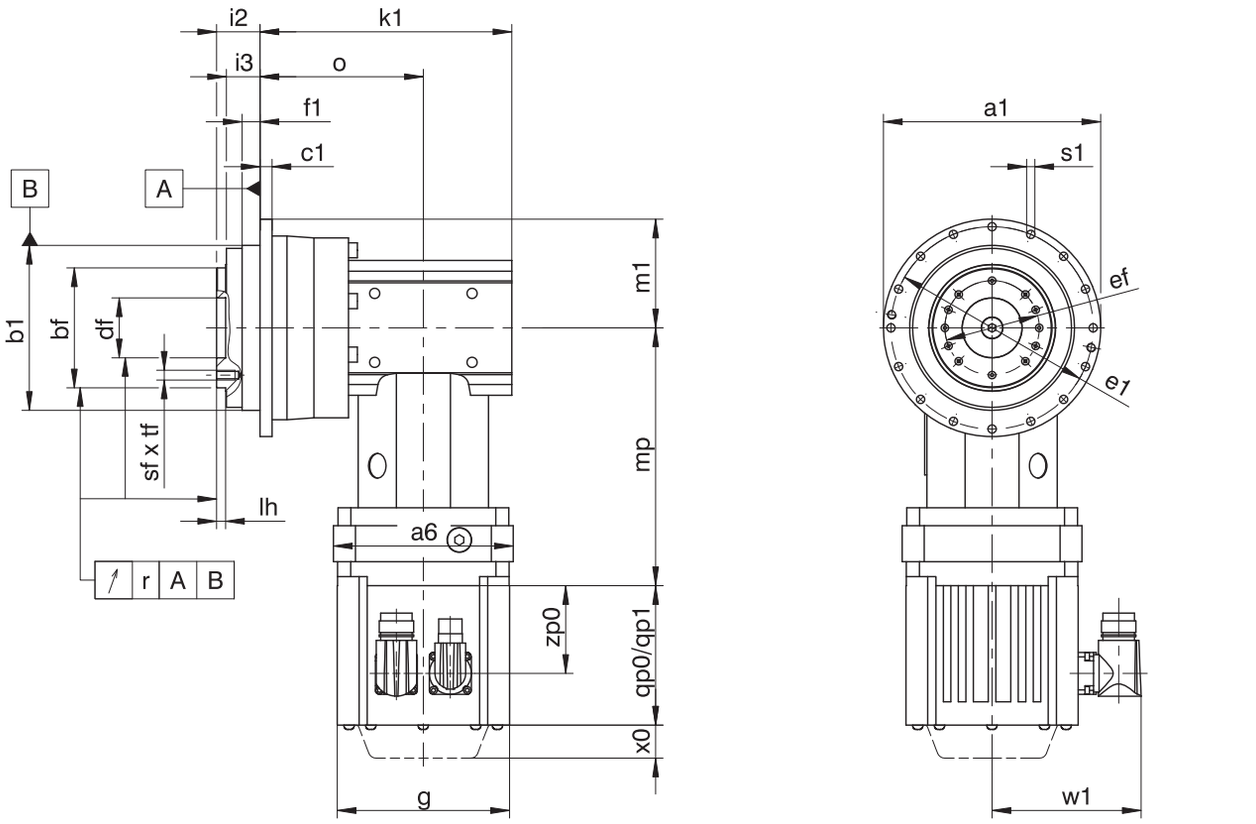

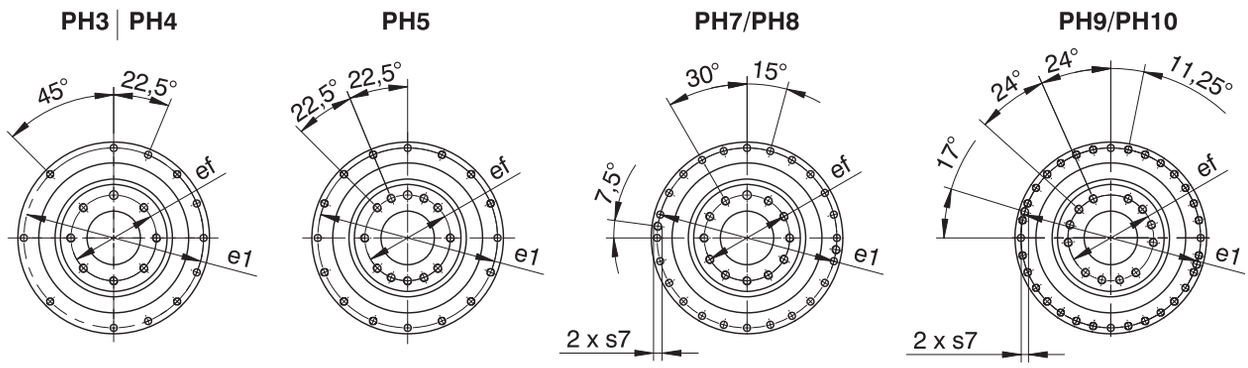

qp0	Applies to motors without brake.	qp1	Applies to motors with brake.
x0	Applies to encoders using an optical measuring method	w1	Different for the One Cable Solution (OCS), see the chapter [▶ 17.4]

Dimensions of gearboxes

Type	Øa1	Øb1	Øbf	c1	Ødf	Øe1	Øef	f1	i2	i3	k1	lh	m1	o	r	Øs1	s7	sf	tf
PH331_KX301_	86	64_{h7}	40_{h7}	4	20.0^{H6}	79	32	7	19.5	16.5	113.5	4	43.0	73.5	0.020	4.5	–	M5	7
PH332_KX301_	86	64_{h7}	40_{h7}	4	20.0^{H6}	79	32	7	19.5	16.5	147.0	4	43.0	107.0	0.020	4.5	–	M5	7
PH431_KX401_	118	90_{h7}	63_{h7}	7	31.5^{H6}	109	50	10	30.0	24.0	139.0	6	59.0	89.0	0.020	5.5	–	M6	11
PH432_KX301_	118	90_{h7}	63_{h7}	7	31.5^{H6}	109	50	10	30.0	24.0	161.5	6	59.0	121.5	0.020	5.5	–	M6	11
PH531_KX501_	145	110_{h7}	80_{h7}	8	40.0^{H6}	135	63	12	29.0	23.0	168.0	6	72.5	109.0	0.020	5.5	–	M6	11
PH532_KX401_	145	110_{h7}	80_{h7}	8	40.0^{H6}	135	63	12	29.0	23.0	187.5	6	72.5	137.5	0.020	5.5	–	M6	11
PH731_KX701_	179	140_{h7}	100_{h7}	10	50.0^{H6}	168	80	12	38.0	32.0	203.0	6	89.5	129.0	0.025	6.6	–	M8	14
PH732_KX501_	179	140_{h7}	100_{h7}	10	50.0^{H6}	168	80	12	38.0	32.0	226.0	6	89.5	167.0	0.025	6.6	–	M8	14
PH831_KX701_	247	200_{h7}	160_{h7}	12	80.0^{H6}	233	125	15	50.0	42.0	235.5	8	123.5	161.5	0.030	9.0	M10	M10	18
PH832_KX701_	247	200_{h7}	160_{h7}	12	80.0^{H6}	233	125	15	50.0	42.0	293.0	8	123.5	219.0	0.030	9.0	M10	M10	18
PH942_KX701_	300	255_{h7}	180_{h7}	18	90.0^{H6}	280	140	20	66.0	55.0	336.0	12	150.0	262.0	0.030	13.5	M8	M16	24
PH1042_KX701_	330	285_{h7}	200_{h7}	20	95.0^{H6}	310	160	20	75.0	60.0	343.0	10	165.0	269.0	0.040	13.5	M10	M20	28

Dimensions of motors

Type	□g	qp0	qp1	w1	x0	zp0
EZ301U	72	90	130.0	55.5	21	54.5
EZ302U	72	112	152.0	55.5	21	76.5
EZ303U	72	134	174.0	55.5	21	98.5
EZ401U	98	98	146.5	91.0	22	56.0
EZ402U	98	123	171.5	91.0	22	81.0
EZ404U	98	173	221.5	91.0	22	131.0
EZ501U	115	93	147.5	100.0	22	58.5
EZ502U	115	118	172.5	100.0	22	83.5
EZ503U	115	143	197.5	100.0	22	108.5
EZ505U	115	193	247.5	100.0	22	158.5
EZ701U	145	102	161.0	115.0	22	64.0
EZ702U	145	127	186.0	115.0	22	89.0
EZ703U	145	152	211.0	115.0	22	114.0
EZ705U	145	207	266.0	134.0	22	165.0
EZ813U	190	238	315.0	156.5	22	184.0
EZ815U	190	320	397.0	156.5	22	266.0

Dimensions of geared motors

Type	EZ3		EZ4		EZ5		EZ7		EZ8	
	□a6	mp	□a6	mp	□a6	mp	□a6	mp	□a6	mp
PH331_KX301_	75	139.5	100	134.0	–	–	–	–	–	–
PH332_KX301_	75	139.5	–	–	–	–	–	–	–	–
PH431_KX401_	100	151.0	100	145.5	115	150.0	140	153.0	–	–
PH432_KX301_	75	139.5	100	134.0	–	–	–	–	–	–
PH531_KX501_	–	–	120	176.5	120	172.0	140	183.0	–	–
PH532_KX401_	100	151.0	100	145.5	115	150.0	140	153.0	–	–
PH731_KX701_	–	–	–	–	150	214.5	150	217.5	190	242.5
PH732_KX501_	–	–	120	176.5	120	172.0	140	183.0	–	–
PH831_KX701_	–	–	–	–	150	214.5	150	217.5	190	242.5
PH832_KX701_	–	–	–	–	150	214.5	150	217.5	–	–
PH942_KX701_	–	–	–	–	150	214.5	150	217.5	190	242.5
PH1042_KX701_	–	–	–	–	150	214.5	150	217.5	190	242.5

12.4 Type designation

This chapter shows you an explanation of the type designation with the associated options.

Additional ordering information not included in the type designation can be found at the end of the chapter.

Example code

PH	7	3	1	S	F	S	S	0050	KX701VF	0010	MF	EZ703U

Explanation

Code	Designation	Design
PH	Type	Planetary gearbox
7	Size	7 (example)
3 4	Generation	Generation 3 Generation 4
1 2	Stages	Single-stage Two-stage
S	Housing	Standard
F	Shaft	Flange shaft
S V	Bearing	Standard bearing Reinforced bearing (PH3 – PH5)
S R	Backlash	Standard Reduced (PH3 – PH9)
0050	Transmission ratio of output (i x 10)	i = 5 (example)
KX701 **VF**	Input	KX7 right-angle geared motor (example)
0010	Transmission ratio of input (i x 10)	i = 1 (example)
MF	Motor adapter	Motor adapter with FlexiAdapt coupling
EZ703U	Motor	EZ synchronous servo motor

To complete the type designation, also specify the following in your order:

- A detailed type designation of the motor, see the chapter [▷ 17.5]
- Mounting position, see the chapter [▷ 12.5.3]
- Radial shaft seal rings at the output made of NBR or FKM (option), see the chapter [▷ 12.6.3]
- Position of the plug connectors, see the chapter [▷ 12.5.5]
- For reverse operation of the output shaft from ±20° to ±90° and horizontal installation, see the chapter [▷ 12.6.4]

To make selecting your geared motor easy, use our STOBER Configurator at https://configurator.stoeber.de/en-US/.

You can find a detailed description of the nameplate in the chapter [▷ 17.5.1].

12.5 Product description

12.5.1 Input options

EZ synchronous servo motor



Catalog ID 442437_en

The corresponding catalogs can be found at http://www.stoeber.de/en/downloads/

Enter the ID of the catalog in the Search term field.

12.5.2 Installation conditions

The torque and force values listed in this catalog are valid under the following conditions:

- When the flange shaft and gear housing are fastened on the machine side using screws of strength class 12.9
- When the gear housings are adjusted at pilot øb1. The machine-side fit must be H7.
- When the flange shaft is adjusted using the connecting element at pilot øbf or ødf

12.5.3 Mounting positions

The following table shows the standard mounting positions.

The numbers identify the gearbox sides. The mounting position is defined by the gearbox side facing downwards.

EL1	EL2	EL3
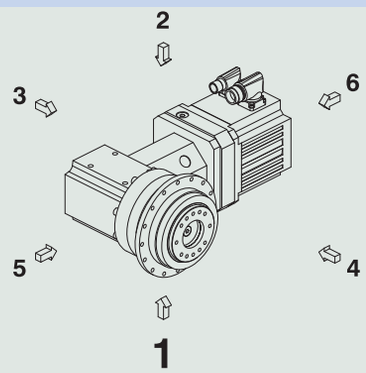	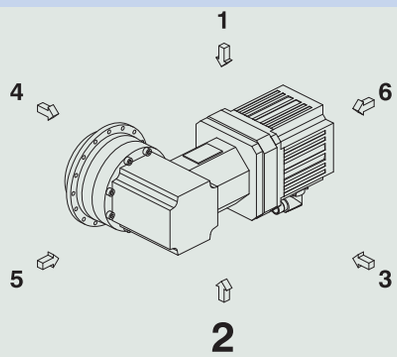	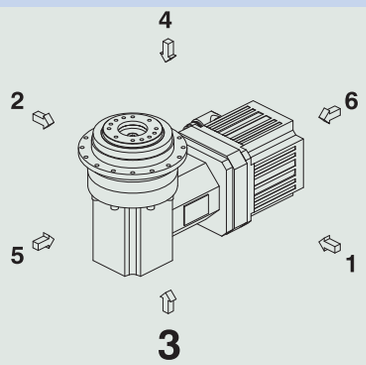
EL4	**EL5**	**EL6**
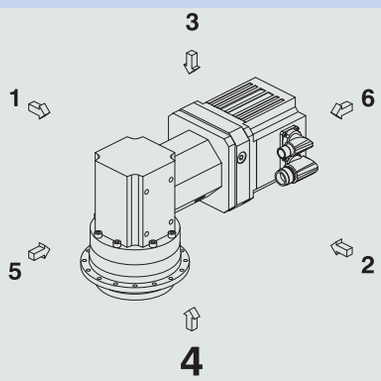	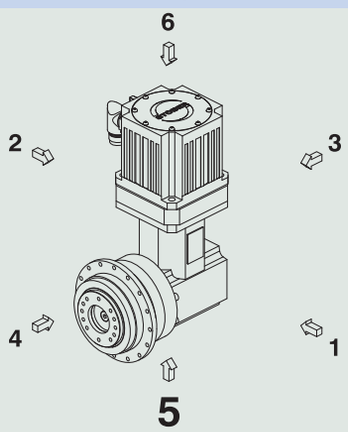	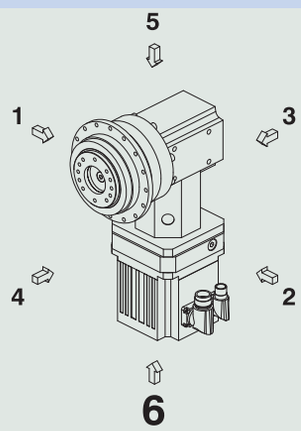

Since the lubricant filling volume of the gearbox depends on the mounting position, the mounting position must be specified when ordering.

12.5.4 Lubricants

STOBER fills the gearboxes with the amount and type of lubricant specified on the nameplate. The filling volume and the structure of the gearboxes depend on the mounting position.

Only install the gearboxes in the intended mounting position! Reposition the gearboxes only after consulting STOBER. Otherwise, STOBER assumes no liability for the gearboxes.

You will receive lubricants for use in the food industry upon request.

12.5.5 Position of the plug connectors

Mounting position EL1	Mounting position EL4
Plug connector in 270° position (standard)	Plug connector in 270° position (standard)
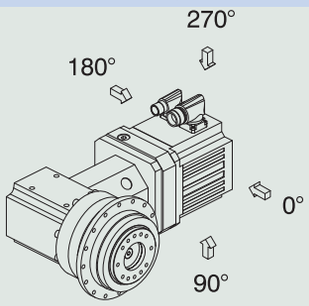	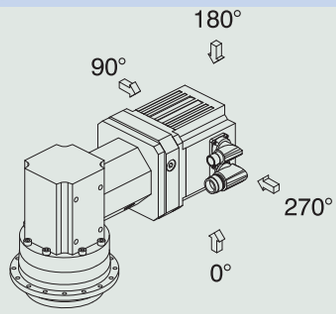

Indicate variations for your geared motor in the order.

Note that the plug connector position rotates along with the geared motor if the geared motor is in another mounting position.

12.5.6 Other product features

Feature	Value
Max. permitted gearbox temperature (on the surface of the gearbox)	≤ 90 °C
Paint	Black RAL 9005
Explosion-proof design in accordance with (ATEX) Directive 2014/34/EU (optional)	Not available
Efficiency:	
η_{get} two-stage	95%
η_{get} three-stage	92%
Protection class:[1]	
Gearbox	IP65
Motor	IP56, optionally IP66

12.5.7 Direction of rotation

PH_KX3 – PH_KX5	PH_KX7
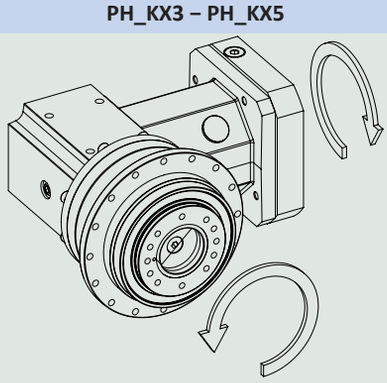	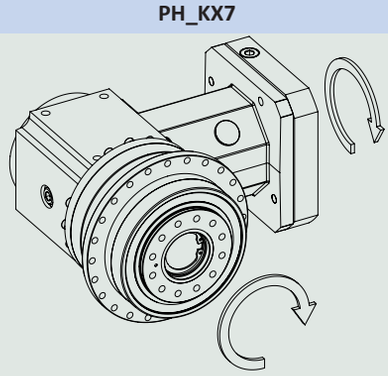

The figures show mounting position EL1.

[1] Observe the protection class of all the components.

12.6 Project configuration

Project your drives using our SERVOsoft designing software. Download SERVOsoft free of charge after registration at https://www.stoeber.de/en/services/info-servosoft/.

It is the most convenient and reliable method of drive selection, as the entire torque/speed curve of the application is displayed and evaluated here in the curve of the geared motor.

In this chapter, only limit values for specific operating points can be taken into consideration for manual drive selection.

An explanation of the formula symbols can be found in Chapter [▷ 20.1].

The formula symbols for values actually present in the application are marked with *.

12.6.1 Drive selection

Drive selection for gearboxes

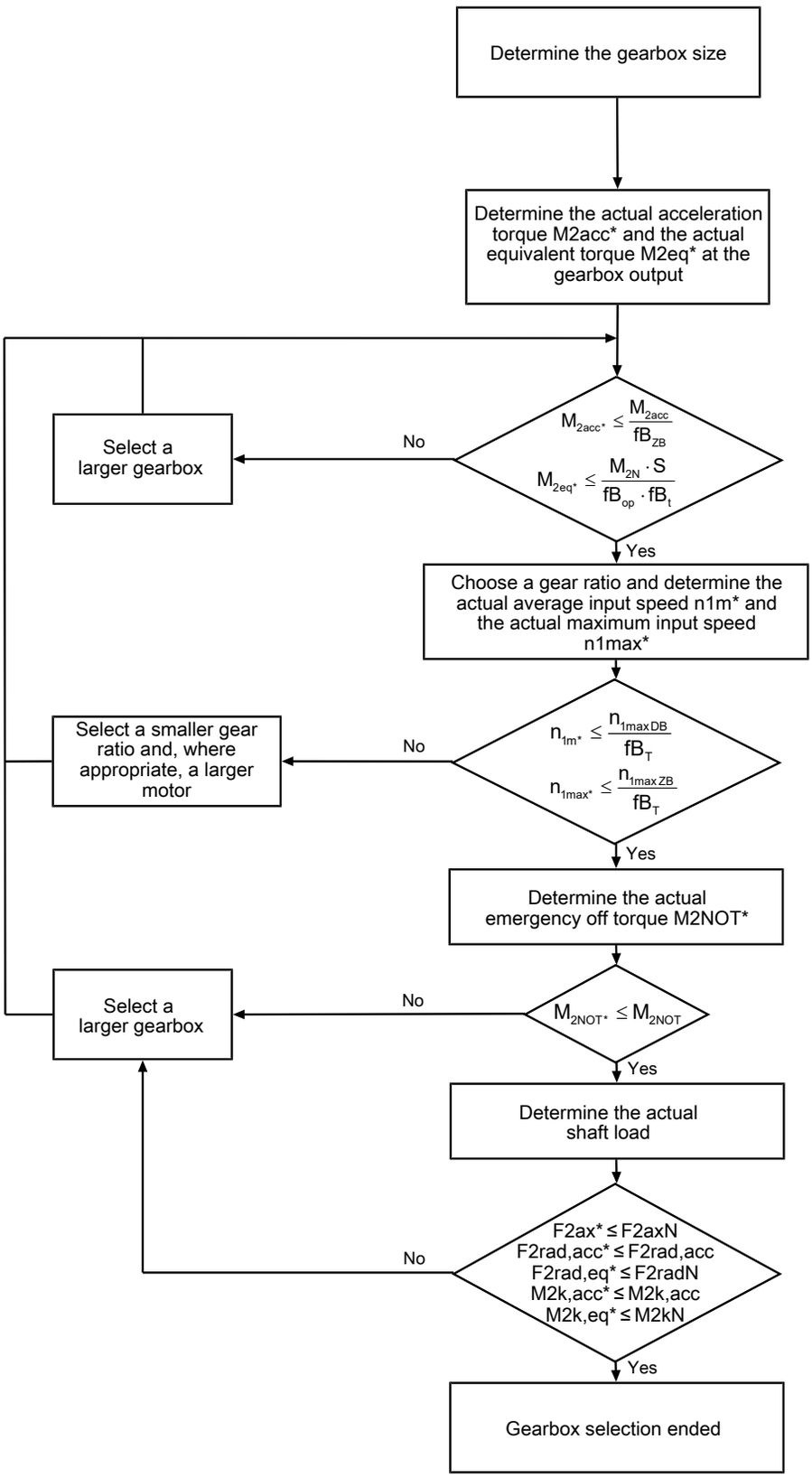

Calculate the forces and tilting torques in the chapter Permitted shaft loads.

Refer to the selection tables for the values for i, n_{1maxDB}, n_{1maxZB}, M_{2acc} (M_{2accHT} for reduced backlash), M_{2NOT}, M_{2N} and S.

The values for fB_T, fB_{op}, fB_t and fB_{ZB} can be found in the corresponding tables in this chapter.

Drive selection for motors

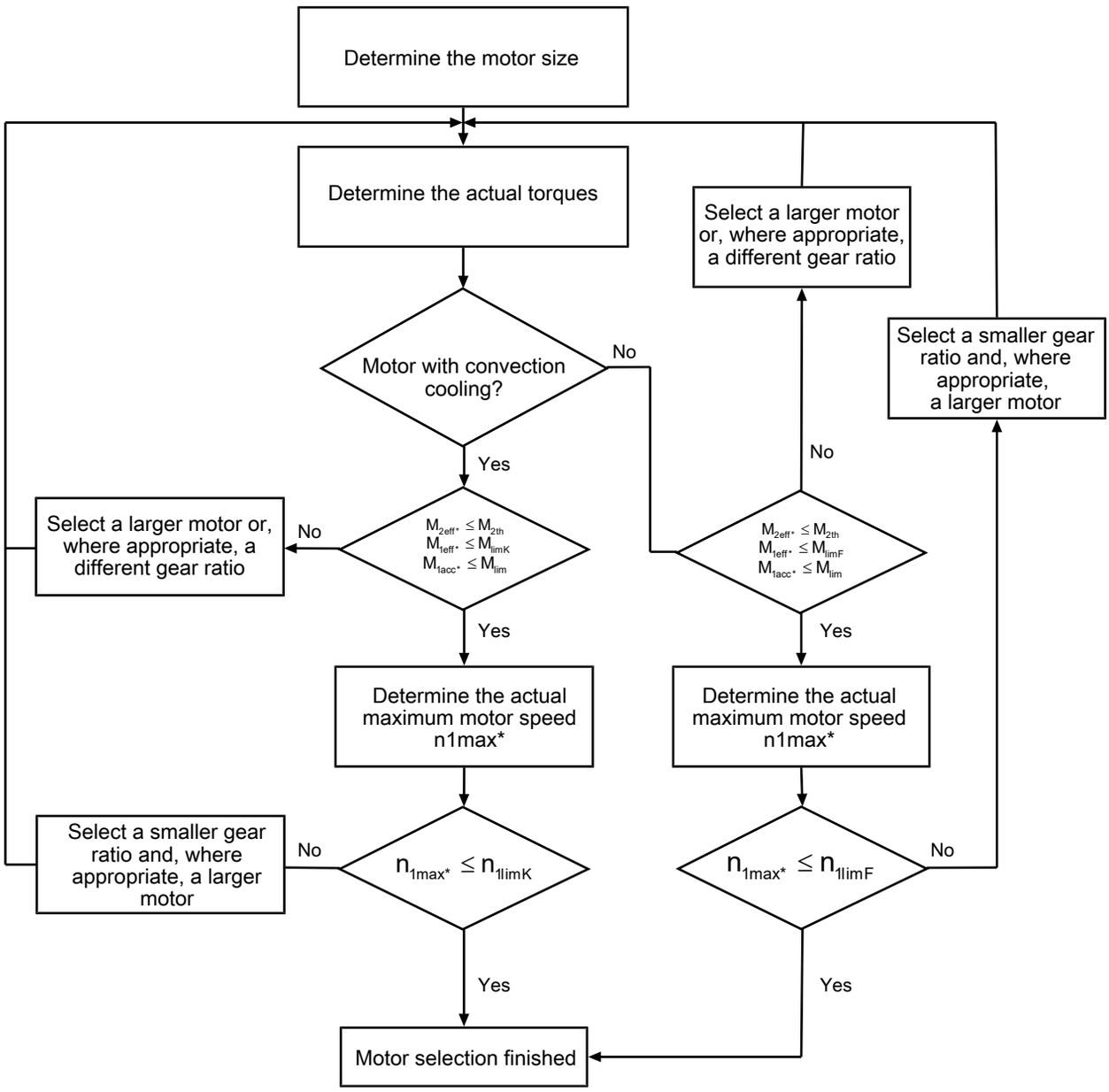

The value for M_{lim}, M_{limK}, M_{limF}, n_{1limK} and n_{1limF} can be found in the motor characteristic curve in the chapter [▷ 17.3]. Note the size, nominal speed n_N and cooling type of the motor.

Example of cyclic operation

The following calculations are based on a representation of the power taken from the output based in accordance with the following example:

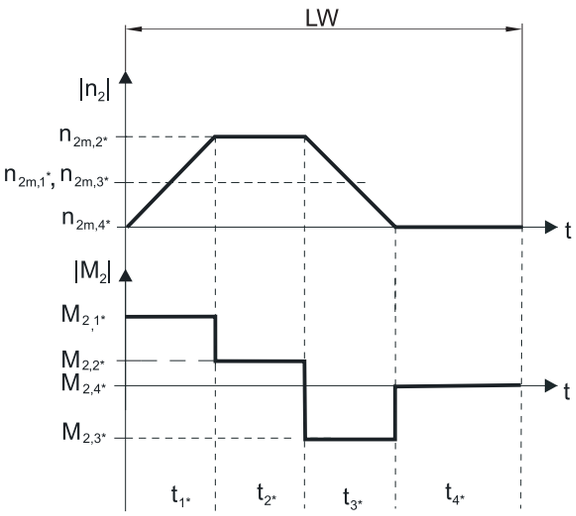

Calculation of the actual maximum acceleration torques

$$M_{2acc*} = J_{tot} \cdot \frac{\Delta n_2}{9{,}55 \cdot \Delta t} + M_{L*}$$

$$M_{1acc*} = \frac{M_{2acc*}}{i \cdot \eta_{get}} + J_1 \cdot \frac{\Delta n_1}{9{,}55 \cdot \Delta t}$$

Calculation of the actual average input speed

$$n_{1m*} = n_{2m*} \cdot i$$

$$n_{2m*} = \frac{\left|n_{2m,1*}\right| \cdot t_{1*} + \ldots + \left|n_{2m,n*}\right| \cdot t_{n*}}{t_{1*} + \ldots + t_{n*}}$$

If $t_{1*} + \ldots + t_{3*} \geq 6$ min, calculate n_{2m*} without the rest phase t_{4*}.

The values for the ratio i can be found in the selection tables.

Calculation of the actual effective torque

$$M_{2eff*} = \sqrt{\frac{t_{1*} \cdot M_{2,1*}{}^2 + \ldots + t_{n*} \cdot M_{2,n*}{}^2}{t_{1*} + \ldots + t_{n*}}}$$

Calculation of the actual emergency off torque

$$M_{2NOT*} = J_{tot} \cdot \frac{\Delta n_2}{9.55 \cdot \Delta t} + M_{L*}$$

Calculation of the actual equivalent torque

$$M_{2eq*} = \sqrt[3]{\frac{\left|n_{2m,1*}\right| \cdot t_{1*} \cdot \left|M_{2,1*}{}^3\right| + \ldots + \left|n_{2m,n*}\right| \cdot t_{n*} \cdot \left|M_{2,n*}{}^3\right|}{\left|n_{2m,1*}\right| \cdot t_{1*} + \ldots + \left|n_{2m,n*}\right| \cdot t_{n*}}}$$

Calculation of the thermal limit torque

Calculate the thermal limit torque M_{2th} for a duty cycle $ED_{10} > 50\%$ and the actual average input speed n_{1m*}. (At $K_{mot,th} \leq 0$ you must reduce the average input speed n_{1m*} accordingly or select another geared motor size.)

$$M_{2th} = M_{op} \cdot i \cdot K_{mot,th}$$

$$K_{mot,th} = 0{,}93 - \frac{a_{th}}{1000} \cdot athEL \cdot fB_T \cdot \left(\frac{n_{1m*}}{1000}\right)^3$$

The values for i and a_{th} can be found in the selection tables.

The values for a_{thEL} and fB_T can be found in the corresponding tables in this chapter.

The value for the torque of the motor at operating point M_{op} with the determined average input speed n_{1m*} can be found in the motor characteristic curve in the chapter [▶ 17.3]. Note the size, nominal speed n_N and cooling type of the motor. The figure below shows an example of reading the torque M_{op} of a motor with convection cooling at the operating point.

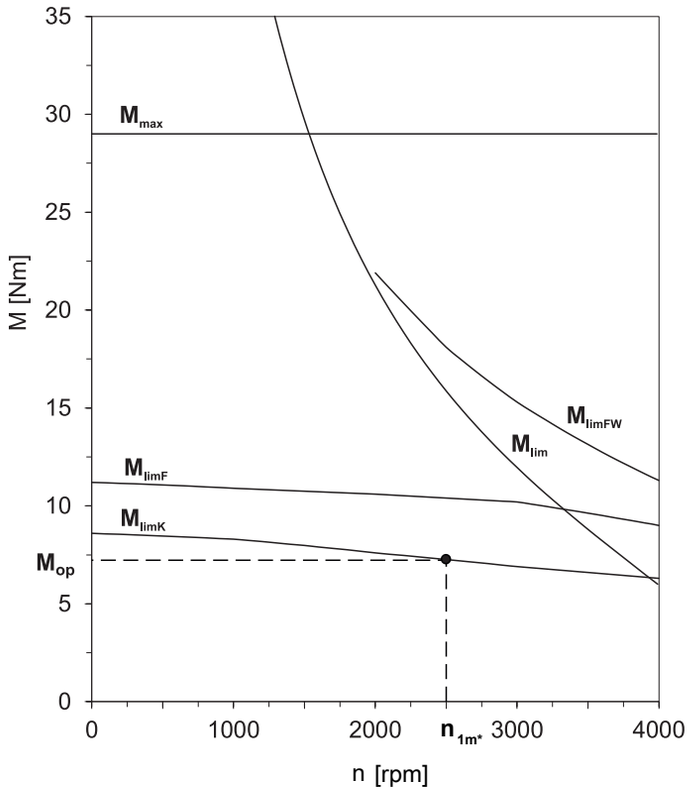

Operating factors

Parameter a_{thEL}

Mounting position	a_{thEL}
EL1, 2, 5, 6	1.0
EL3, 4	1.1

Operating mode	fB_{op}
Uniform continuous operation	1.00
Cyclic operation	1.25
Reversing load cyclic operation	1.40

Run time	fB_t
Daily runtime ≤ 8 h	1.00
Daily runtime ≤ 16 h	1.15
Daily runtime ≤ 24 h	1.20

Cyclic operation	fB_{ZB}
≤ 1000 load changes/hour (LW/h)	1.00
> 1000 load changes/hour (LW/h)	1.15

Temperature		fB_T
Motor cooling	**Surrounding temperature**	
Motor with forced ventilation	≤ 20 °C	0.9
	≤ 30 °C	1.0
	≤ 40 °C	1.15
Motor with convection cooling	≤ 20 °C	1.0
	≤ 30 °C	1.1
	≤ 40 °C	1.25

Notes

- The maximum permitted gearbox temperature (see the "Other product features" chapter) must not be exceeded. Doing so may result in damage to the geared motor.
- For braking from full speed (for example when the power fails or when setting up the machine), note the permitted gearbox torques (M_{2acc}, M_{2NOT}) in the selection tables.

12.6.2 Permitted shaft loads for the output shaft

The values specified in the tables apply to the permitted shaft loads:

- For shaft dimensions in accordance with the catalog
- For output speeds $n_{2m*} \leq 100$ rpm ($F^{2axN} = F_{2ax100}$; $F_{2radN} = F_{2rad100}$; $M_{2kN} = M_{2k100}$)
- Only if radial forces on the gearbox are stabilized by its pilots (housing, flange shaft)

Permitted shaft loads for standard bearing S

Type	z_2 [mm]	F_{2ax100} [N]	$F_{2rad100}$ [N]	$F_{2rad,acc}$ [N]	M_{2k100} [Nm]	$M_{2k,acc}$ [Nm]	C_{2k} [Nm/ arcmin]
PH3	62.5	1650	1613	1613	101	101	75
PH4	83.0	2150	3095	3571	257	296	192
PH5	97.0	4150	4536	4897	440	475	429
PH7	86.0	6150	17045	17045	1466	1466	500
PH8	125.5	10050	27778	27778	3486	3486	1550
PH9	155.0	33000	48387	70968	7500	11000	7500
PH10	171.0	50000	51462	73099	8800	12500	9500

Permitted shaft loads for reinforced bearing V

Type	z_2 [mm]	F_{2ax100} [N]	$F_{2rad100}$ [N]	$F_{2rad,acc}$ [N]	M_{2k100} [Nm]	$M_{2k,acc}$ [Nm]	C_{2k} [Nm/ arcmin]
PH3	66.5	2200	2250	2250	150	150	80
PH4	88.5	2900	4000	4000	354	354	217
PH5	104.0	5000	5500	5500	572	572	478

For other output speeds, download diagrams at https://configurator.stoeber.de/en-US/.

The following applies to output speeds $n_{2m*} > 100$ rpm:

$$F_{2axN} = \frac{F_{2ax100}}{\sqrt[3]{\frac{n_{2m*}}{100\ \text{rpm}}}} \qquad F_{2radN} = \frac{F_{2rad100}}{\sqrt[3]{\frac{n_{2m*}}{100\ \text{rpm}}}} \qquad M_{2kN} = \frac{M_{2k100}}{\sqrt[3]{\frac{n_{2m*}}{100\ \text{rpm}}}}$$

The values for F_{2ax100}, $F_{2rad100}$ and M_{2k100} can be found in the table "Permitted shaft loads" in this chapter.

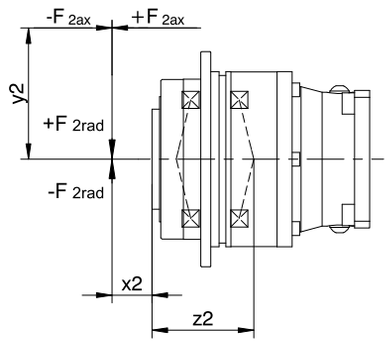

Fig. 1: Force application points

You can determine the permitted radial forces from the permitted tilting torque M_{2kN} and $M_{2k,acc}$. The actual radial forces may not exceed the permitted radial forces. The permitted radial forces pertain to the shaft end (x2 = 0).

$$M_{2k,acc^*} = \frac{2 \cdot F_{2ax^*} \cdot y_2 + F_{2rad,acc^*} \cdot (x_2 + z_2)}{1000}$$

For applications with multiple axial and/or radial forces, you must add the forces as vectors.

In the event of EMERGENCY OFF operation (max. 1000 load changes), you can multiply the permitted forces and torques for F_{2ax100}, $F_{2rad100}$ and M_{2k100} by a factor of two.

Also note the calculation for equivalent values:

$$M_{2k,eq^*} = \sqrt[3]{\frac{|n_{2m,1^*}| \cdot t_{1^*} \cdot |M_{2k,acc,1^*}^{\ 3}| + \ldots + |n_{2m,n^*}| \cdot t_{n^*} \cdot |M_{2k,acc,n^*}^{\ 3}|}{|n_{2m,1^*}| \cdot t_{1^*} + \ldots + |n_{2m,n^*}| \cdot t_{n^*}}}$$

$$F_{2rad,eq^*} = \sqrt[3]{\frac{|n_{2m,1^*}| \cdot t_{1^*} \cdot |F_{2rad,acc,1^*}^{\ 3}| + \ldots + |n_{2m,n^*}| \cdot t_{n^*} \cdot |F_{2rad,acc,n^*}^{\ 3}|}{|n_{2m,1^*}| \cdot t_{1^*} + \ldots + |n_{2m,n^*}| \cdot t_{n^*}}}$$

The following apply to the bearing service life L_{10h} (ED_{10} ≤ 40%):

L_{10h} > 10000 h with 1 < M_{2kN}/M_{2k^*} < 1.25

L_{10h} > 20000 h with 1.25 < M_{2kN}/M_{2k^*} < 1.5

L_{10h} > 30000 h with 1.5 < M_{2kN}/M_{2k^*}

For different duty cycles:

$$L_{10h} > L_{10h(ED_{10}=40\%)} \cdot \frac{40\%}{ED_{10}}$$

12.6.3 Recommendation for radial shaft seal rings

For a duty cycle > 60% and higher surrounding temperatures, we recommend radial shaft seal rings made of FKM at the output.

Properties:

- Excellent temperature resistance
- High chemical stability
- Very good resistance to aging
- Excellent resistance in oils and greases
- For use in the food, beverage and pharmaceutical industries

Leak-proofness

Our gearboxes are equipped with high-quality radial shaft seal rings and checked for leaks. However, a leak cannot be fully ruled out over the length of use of a gearbox. If you use a gearbox with goods incompatible with the lubricant, you must take measures to prevent direct contact with the gearbox lubricant in case of a leak.

12.6.4 Reverse operation

To ensure lubrication for circulating gearing parts during cyclic reverse operation from ± 20° to ± 90° at the output, pay careful attention to the position of the output shaft for the horizontal mounting of the gearbox, as shown in the diagrams below.

The images show the center position of reverse operation.

Cyclic reverse operation ≤ ± 20° on request.

Size 3 – 10
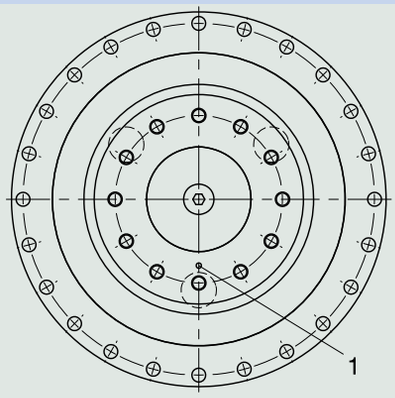
1 Position of the mark: bottom

Please note that the hole pattern may be different, depending on the size of the planetary gearbox.

12.7 Additional documentation

Additional documentation related to the product can be found at
http://www.stoeber.de/en/downloads/

Enter the ID of the documentation in the Search term field.

Documentation	ID
Operating manual gearboxes, geared motors PH33KX – PH83KX, PH94KX – PH104KX	443359_en

13 PHK right-angle planetary geared motors

Table of contents

13.1 Overview 366

13.2 Selection tables 367

13.3 Dimensional drawings 383

13.3.1 F shaft design (flange shaft) 384

13.4 Type designation 386

13.5 Product description 386

13.5.1 Input options 386

13.5.2 Installation conditions 387

13.5.3 Mounting positions 387

13.5.4 Lubricants 387

13.5.5 Position of the plug connectors 388

13.5.6 Other product features 388

13.5.7 Direction of rotation 388

13.6 Project configuration 389

13.6.1 Drive selection 390

13.6.2 Permitted shaft loads for the output shaft 394

13.6.3 Recommendation for radial shaft seal rings 395

13.6.4 Reverse operation 396

13.7 Additional documentation 396

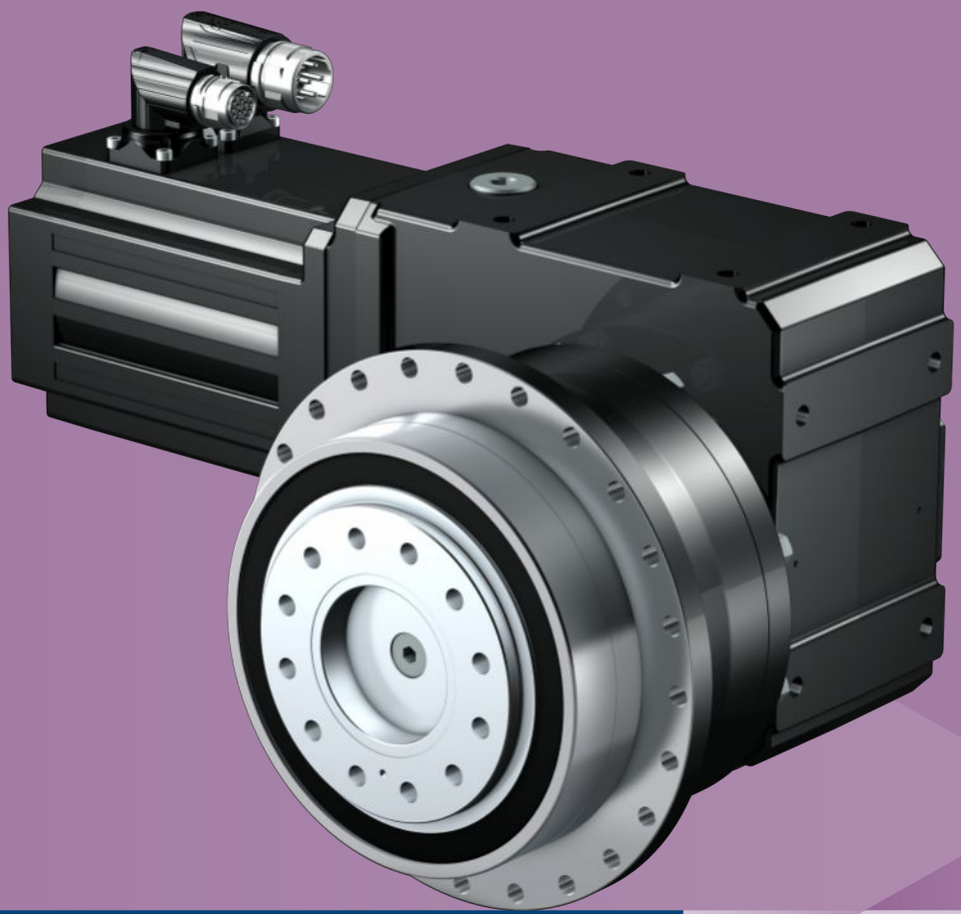

13

Right-angle planetary geared motors

PHK

13.1 Overview

High-performance precision right-angle planetary geared motors

Features

Power density	★★★★☆
Backlash	★★★★★
Price category	€€€€
Shaft load	★★★★★
Smooth operation	★★★☆☆
Torsional stiffness	★★★★☆
Mass moment of inertia	★★★★★
Helical gearing	✓
Maintenance-free	✓
Continuous operation without cooling	✓
Stiff output bearings due to pretension	✓
Reinforced output bearing (PH3 – PH5)	✓ (optional)
Compact and highly dynamic due to direct motor attachment	✓

Key ★☆☆☆☆ good | ★★★★★ excellent
€ Economy | €€€€€ Premium

Technical data

i	16 – 555
M_{2acc}	89 – 7500 Nm
$\Delta\phi_2$	1.5 – 4.5 arcmin
η_{get}	92 – 93 %

13.2 Selection tables

The technical data specified in the selection tables applies to:

- Installation altitudes up to 1000 m above sea level
- Surrounding temperatures from 0 °C to 40 °C
- Drives with convection-cooled motors (e.g. EZ401**U**)

For the technical data on drives with forced ventilated motors (e.g. EZ401**B**), refer to https://configurator.stoeber.de/en-US/.

An explanation of the formula symbols can be found in Chapter [▷ 20.1].

n_{2N} [rpm]	M_{2N} [Nm]	$M_{2,0}$ [Nm]	a_{th}	S	Type	M_{2acc} [Nm]	M_{2accHT} [Nm]	M_{2NOT} [Nm]	i	i_{exakt}	n_{1maxDB} EL1,2 [rpm]	n_{1maxDB} EL3,4,5,6 [rpm]	n_{1maxZB} [rpm]	$\Delta\varphi_2$ [arcmin]	J_1 [kgcm²]	$\Delta\varphi_{2red}$ [arcmin]	C_2 [Nm/arcmin]	m [kg]
PH531K (n_{1N} = 3000 min^{-1}, $M_{2acc,max}$ = 390 Nm)																		
13	203	208	12	1.1	PH531_0050K102_0470 EZ301U	385	400	705	234.6	11495/49	4000	4000	7000	4.0	0.22	2.0	62	17
17	152	155	11	1.4	PH531_0050K102_0350 EZ301U	385	400	705	175.5	3686/21	4000	4000	7000	4.0	0.23	2.0	62	17
21	121	124	10	1.8	PH531_0050K102_0280 EZ301U	366	366	705	140.2	2945/21	4000	4000	7000	4.0	0.26	2.0	62	17
21	208	219	17	1.1	PH531_0050K102_0280 EZ302U	385	400	705	140.2	2945/21	4000	4000	7000	4.0	0.36	2.0	62	18
26	101	103	9.7	2.2	PH531_0050K102_0230 EZ301U	303	303	705	116.3	5700/49	4000	4000	7000	4.0	0.28	2.0	62	17
26	172	182	17	1.3	PH531_0050K102_0230 EZ302U	385	400	705	116.3	5700/49	4000	4000	7000	4.0	0.38	2.0	62	18
34	76	78	9.1	2.9	PH531_0050K102_0175 EZ301U	229	229	666	87.82	10450/119	4000	4000	6000	4.0	0.32	2.0	62	17
34	130	137	16	1.7	PH531_0050K102_0175 EZ302U	385	400	666	87.82	10450/119	4000	4000	6000	4.0	0.42	2.0	62	18
34	169	179	20	1.3	PH531_0050K102_0175 EZ303U	385	400	666	87.82	10450/119	4000	4000	6000	4.0	0.53	2.0	62	18
43	61	62	8.6	3.6	PH531_0050K102_0140 EZ301U	184	184	535	70.57	494/7	4000	4000	6000	4.0	0.37	2.0	62	17
43	104	110	15	2.1	PH531_0050K102_0140 EZ302U	329	329	535	70.57	494/7	4000	4000	6000	4.0	0.47	2.0	62	18
43	136	144	19	1.6	PH531_0050K102_0140 EZ303U	385	394	535	70.57	494/7	4000	4000	6000	4.0	0.58	2.0	62	18
43	184	197	26	1.2	PH531_0050K102_0140 EZ401U	385	400	705	70.57	494/7	4000	4000	6000	4.0	1.1	2.0	62	20
52	50	51	8.2	4.4	PH531_0050K102_0115 EZ301U	151	151	438	57.83	1330/23	3600	3600	5500	4.0	0.44	2.0	62	17
52	86	90	14	2.6	PH531_0050K102_0115 EZ302U	269	269	438	57.83	1330/23	3600	3600	5500	4.0	0.54	2.0	62	18
52	111	118	18	2.0	PH531_0050K102_0115 EZ303U	323	323	438	57.83	1330/23	3600	3600	5500	4.0	0.65	2.0	62	18
52	151	162	25	1.5	PH531_0050K102_0115 EZ401U	385	400	705	57.83	1330/23	3600	3600	5500	4.0	1.2	2.0	62	20
65	68	72	13	3.2	PH531_0050K102_0092 EZ302U	215	215	351	46.25	8740/189	3600	3600	5500	4.0	0.63	2.0	62	18
65	89	94	17	2.5	PH531_0050K102_0092 EZ303U	259	259	351	46.25	8740/189	3600	3600	5500	4.0	0.74	2.0	62	18
65	121	129	23	1.8	PH531_0050K102_0092 EZ401U	366	366	705	46.25	8740/189	3600	3600	5500	4.0	1.3	2.0	62	20
65	185	202	36	1.2	PH531_0050K102_0092 EZ501U	385	400	705	46.25	8740/189	3600	3600	5500	4.0	3.2	2.0	62	21
65	202	224	39	1.1	PH531_0050K102_0092 EZ402U	385	400	705	46.25	8740/189	3600	3600	5500	4.0	2.0	2.0	62	21
72	62	65	13	3.6	PH531_0050K102_0083 EZ302U	193	193	315	41.55	1911/46	3600	3600	5500	4.0	0.59	2.0	62	18
72	80	85	17	2.7	PH531_0050K102_0083 EZ303U	232	232	315	41.55	1911/46	3600	3600	5500	4.0	0.70	2.0	62	18
72	108	116	23	2.0	PH531_0050K102_0083 EZ401U	329	329	705	41.55	1911/46	3600	3600	5500	4.0	1.2	2.0	62	20
72	166	182	35	1.3	PH531_0050K102_0083 EZ501U	385	400	705	41.55	1911/46	3600	3600	5500	4.0	3.2	2.0	62	21
72	182	201	38	1.2	PH531_0050K102_0083 EZ402U	385	400	705	41.55	1911/46	3600	3600	5500	4.0	1.9	2.0	62	21
90	49	52	14	3.8	PH531_0050K102_0066 EZ302U	155	155	252	33.22	299/9	3600	3600	5500	4.0	0.71	2.0	62	18
90	64	68	19	2.9	PH531_0050K102_0066 EZ303U	186	186	252	33.22	299/9	3600	3600	5500	4.0	0.82	2.0	62	18
90	87	93	21	2.5	PH531_0050K102_0066 EZ401U	263	263	705	33.22	299/9	3600	3600	5500	4.0	1.4	2.0	62	20
90	133	145	33	1.7	PH531_0050K102_0066 EZ501U	385	400	705	33.22	299/9	3600	3600	5500	4.0	3.3	2.0	62	21
90	145	161	36	1.5	PH531_0050K102_0066 EZ402U	385	400	705	33.22	299/9	3600	3600	5500	4.0	2.1	2.0	62	21
90	213	266	53	1.0	PH531_0050K102_0066 EZ404U	385	400	705	33.22	299/9	3600	3600	5500	4.0	3.4	2.0	62	23
100	78	84	21	2.8	PH531_0050K102_0060 EZ401U	237	237	705	30.00	30/1	3300	3300	5000	4.0	1.4	2.0	62	20
100	120	131	32	1.8	PH531_0050K102_0060 EZ501U	385	400	705	30.00	30/1	3300	3300	5000	4.0	3.4	2.0	62	21
100	131	145	35	1.7	PH531_0050K102_0060 EZ402U	385	400	705	30.00	30/1	3300	3300	5000	4.0	2.1	2.0	62	21
100	193	240	51	1.1	PH531_0050K102_0060 EZ404U	385	400	705	30.00	30/1	3300	3300	5000	4.0	3.5	2.0	62	23
100	207	223	55	1.1	PH531_0050K102_0060 EZ502U	385	400	705	30.00	30/1	3300	3300	5000	4.0	5.7	2.0	62	22
100	207	232	55	1.1	PH531_0050K102_0060 EZ701U	385	400	705	30.00	30/1	3300	3300	5000	4.0	9.0	2.0	62	24
108	41	44	16	3.8	PH531_0050K102_0056 EZ302U	130	130	211	27.84	7600/273	3300	3300	5000	4.0	0.98	2.0	62	18
108	54	57	21	2.9	PH531_0050K102_0056 EZ303U	156	156	211	27.84	7600/273	3300	3300	5000	4.0	1.1	2.0	62	18
108	73	78	20	3.0	PH531_0050K102_0056 EZ401U	220	220	705	27.84	7600/273	3300	3300	5000	4.0	1.6	2.0	62	20
108	111	122	31	2.0	PH531_0050K102_0056 EZ501U	385	400	705	27.84	7600/273	3300	3300	5000	4.0	3.6	2.0	62	21
108	122	135	34	1.8	PH531_0050K102_0056 EZ402U	385	400	705	27.84	7600/273	3300	3300	5000	4.0	2.3	2.0	62	21
108	179	223	50	1.2	PH531_0050K102_0056 EZ404U	385	400	705	27.84	7600/273	3300	3300	5000	4.0	3.7	2.0	62	23
108	192	207	54	1.1	PH531_0050K102_0056 EZ502U	385	400	705	27.84	7600/273	3300	3300	5000	4.0	5.9	2.0	62	22
108	192	215	54	1.1	PH531_0050K102_0056 EZ701U	385	400	705	27.84	7600/273	3300	3300	5000	4.0	9.2	2.0	62	24
150	39	41	27	2.9	PH531_0050K102_0040 EZ303U	112	112	152	20.00	20/1	3300	3300	5000	4.0	1.3	2.0	62	18
150	52	56	19	4.2	PH531_0050K102_0040 EZ401U	158	158	607	20.00	20/1	3300	3300	5000	4.0	1.9	2.0	62	20
150	80	88	29	2.7	PH531_0050K102_0040 EZ501U	298	298	607	20.00	20/1	3300	3300	5000	4.0	3.8	2.0	62	21
150	88	97	32	2.5	PH531_0050K102_0040 EZ402U	298	298	607	20.00	20/1	3300	3300	5000	4.0	2.6	2.0	62	21
150	129	160	46	1.7	PH531_0050K102_0040 EZ404U	385	400	607	20.00	20/1	3300	3300	5000	4.0	3.9	2.0	62	23

n_{2N} [rpm]	M_{2N} [Nm]	$M_{2,0}$ [Nm]	a_{th}	S	Type	M_{2acc} [Nm]	M_{2accHT} [Nm]	M_{2NOT} [Nm]	i	i_{exakt}	n_{1maxDB} EL1,2 [rpm]	n_{1maxDB} EL3,4,5,6 [rpm]	n_{1maxZB} [rpm]	$\Delta\varphi_2$ [arcmin]	J_1 [kgcm²]	$\Delta\varphi_{2red}$ [arcmin]	C_2 [Nm/ arcmin]	m [kg]
PH531K (n_{1N} = 3000 min^{-1}, $M_{2acc,max}$ = 390 Nm)																		
150	138	149	50	1.6	PH531_0050K102_0040 EZ502U	385	400	607	20.00	20/1	3300	3300	5000	4.0	6.1	2.0	62	22
150	138	155	50	1.6	PH531_0050K102_0040 EZ701U	372	372	607	20.00	20/1	3300	3300	5000	4.0	9.4	2.0	62	24
150	181	207	65	1.2	PH531_0050K102_0040 EZ503U	385	400	607	20.00	20/1	3300	3300	5000	4.0	8.5	2.0	62	24
188	31	33	27	2.9	PH531_0040K102_0040 EZ303U	89	89	121	16.00	16/1	3300	3300	5000	4.5	1.4	2.5	52	18
188	42	45	17	4.8	PH531_0040K102_0040 EZ401U	127	127	485	16.00	16/1	3300	3300	5000	4.5	1.9	2.5	52	20
188	64	70	26	3.1	PH531_0040K102_0040 EZ501U	238	238	485	16.00	16/1	3300	3300	5000	4.5	3.9	2.5	52	21
188	70	77	28	2.8	PH531_0040K102_0040 EZ402U	238	238	485	16.00	16/1	3300	3300	5000	4.5	2.6	2.5	52	21
188	103	128	41	1.9	PH531_0040K102_0040 EZ404U	355	358	485	16.00	16/1	3300	3300	5000	4.5	3.9	2.5	52	23
188	110	119	44	1.8	PH531_0040K102_0040 EZ502U	355	358	485	16.00	16/1	3300	3300	5000	4.5	6.2	2.5	52	22
188	110	124	44	1.8	PH531_0040K102_0040 EZ701U	298	298	485	16.00	16/1	3300	3300	5000	4.5	9.5	2.5	52	24
188	145	165	58	1.4	PH531_0040K102_0040 EZ503U	355	358	485	16.00	16/1	3300	3300	5000	4.5	8.5	2.5	52	24
PH531K (n_{1N} = 6000 min^{-1}, $M_{2acc,max}$ = 390 Nm)																		
26	194	208	11	1.1	PH531_0050K102_0470 EZ301U	385	400	705	234.6	11495/49	4000	4000	7000	4.0	0.22	2.0	62	17
34	145	155	10	1.5	PH531_0050K102_0350 EZ301U	385	400	705	175.5	3686/21	4000	4000	7000	4.0	0.23	2.0	62	17
43	116	124	9.8	1.9	PH531_0050K102_0280 EZ301U	366	366	705	140.2	2945/21	4000	4000	7000	4.0	0.26	2.0	62	17
43	196	219	16	1.1	PH531_0050K102_0280 EZ302U	385	400	705	140.2	2945/21	4000	4000	7000	4.0	0.36	2.0	62	18
52	96	103	9.3	2.3	PH531_0050K102_0230 EZ301U	303	303	705	116.3	5700/49	4000	4000	7000	4.0	0.28	2.0	62	17
52	162	182	16	1.4	PH531_0050K102_0230 EZ302U	385	400	705	116.3	5700/49	4000	4000	7000	4.0	0.38	2.0	62	18
52	212	244	21	1.0	PH531_0050K102_0230 EZ303U	385	400	705	116.3	5700/49	4000	4000	7000	4.0	0.49	2.0	62	18
68	73	78	8.7	3.0	PH531_0050K102_0175 EZ301U	229	229	666	87.82	10450/119	4000	4000	6000	4.0	0.32	2.0	62	17
68	123	137	15	1.8	PH531_0050K102_0175 EZ302U	385	400	666	87.82	10450/119	4000	4000	6000	4.0	0.42	2.0	62	18
68	160	184	19	1.4	PH531_0050K102_0175 EZ303U	385	400	666	87.82	10450/119	4000	4000	6000	4.0	0.53	2.0	62	18
68	188	229	22	1.2	PH531_0050K102_0175 EZ401U	385	400	705	87.82	10450/119	4000	4000	6000	4.0	1.1	2.0	62	20
85	58	62	8.2	3.8	PH531_0050K102_0140 EZ301U	184	184	535	70.57	494/7	4000	4000	6000	4.0	0.37	2.0	62	17
85	99	110	14	2.2	PH531_0050K102_0140 EZ302U	329	329	535	70.57	494/7	4000	4000	6000	4.0	0.47	2.0	62	18
85	129	148	18	1.7	PH531_0050K102_0140 EZ303U	385	394	535	70.57	494/7	4000	4000	6000	4.0	0.58	2.0	62	18
85	151	184	21	1.5	PH531_0050K102_0140 EZ401U	385	400	705	70.57	494/7	4000	4000	6000	4.0	1.1	2.0	62	20
PH731K (n_{1N} = 3000 min^{-1}, $M_{2acc,max}$ = 880 Nm)																		
6.1	425	434	9.0	1.0	PH731_0070K102_0700 EZ301U	561	561	1014	490.2	2451/5	4000	4000	7000	4.0	0.20	2.0	111	22
7.6	340	347	8.5	1.3	PH731_0070K102_0560 EZ301U	690	690	1248	392.7	1178/3	4000	4000	7000	4.0	0.21	2.0	111	22
8.5	305	312	11	1.1	PH731_0070K102_0500 EZ301U	403	403	728	352.2	35217/100	4000	4000	7000	4.0	0.21	2.0	111	22
8.5	304	311	14	1.2	PH731_0100K102_0350 EZ301U	575	575	1150	351.1	7372/21	4000	4000	7000	3.5	0.23	1.5	105	22
9.1	284	291	8.1	1.5	PH731_0070K102_0470 EZ301U	819	819	1482	328.4	2299/7	4000	4000	7000	4.0	0.22	2.0	111	22
11	244	250	8.3	1.7	PH731_0070K102_0400 EZ301U	496	496	896	282.1	2821/10	4000	4000	7000	4.0	0.21	2.0	111	22
11	243	248	13	1.4	PH731_0100K102_0280 EZ301U	575	575	1150	280.5	5890/21	4000	4000	7000	3.5	0.26	1.5	105	22
11	411	434	11	1.1	PH731_0050K202_0560 EZ302U	882	915	1407	277.7	6665/24	4000	4000	6500	4.0	0.34	2.0	117	30
12	213	217	7.5	2.1	PH731_0070K102_0350 EZ301U	641	641	1428	245.7	3686/15	4000	4000	7000	4.0	0.23	2.0	111	22
12	364	384	13	1.2	PH731_0070K102_0350 EZ302U	869	869	1428	245.7	3686/15	4000	4000	7000	4.0	0.33	2.0	111	23
13	204	209	7.5	2.2	PH731_0070K102_0340 EZ301U	589	589	1064	235.9	4719/20	4000	4000	7000	4.0	0.22	2.0	111	22
13	349	369	13	1.3	PH731_0070K102_0340 EZ302U	589	589	1064	235.9	4719/20	4000	4000	7000	4.0	0.32	2.0	111	23
13	201	206	12	1.7	PH731_0100K102_0230 EZ301U	575	575	1150	232.7	11400/49	4000	4000	7000	3.5	0.28	1.5	105	22
13	344	364	21	1.0	PH731_0100K102_0230 EZ302U	575	575	1150	232.7	11400/49	4000	4000	7000	3.5	0.38	1.5	105	23
13	342	362	11	1.3	PH731_0050K202_0460 EZ302U	882	924	1343	231.1	1849/8	4000	4000	6500	4.0	0.36	2.0	117	30
15	170	174	7.1	2.6	PH731_0070K102_0280 EZ301U	512	512	1230	196.3	589/3	4000	4000	7000	4.0	0.26	2.0	111	22
15	291	307	12	1.5	PH731_0070K102_0280 EZ302U	869	869	1230	196.3	589/3	4000	4000	7000	4.0	0.36	2.0	111	23
15	378	400	16	1.2	PH731_0070K102_0280 EZ303U	869	869	1230	196.3	589/3	4000	4000	7000	4.0	0.47	2.0	111	23
17	153	156	6.9	2.9	PH731_0070K102_0250 EZ301U	460	460	1026	176.5	8827/50	4000	4000	7000	4.0	0.24	2.0	111	22
17	261	276	12	1.7	PH731_0070K102_0250 EZ302U	756	756	1026	176.5	8827/50	4000	4000	7000	4.0	0.34	2.0	111	23
17	340	360	15	1.3	PH731_0070K102_0250 EZ303U	756	756	1026	176.5	8827/50	4000	4000	7000	4.0	0.45	2.0	111	23
17	256	270	10	1.7	PH731_0050K202_0350 EZ302U	804	804	1116	172.8	9675/56	4000	4000	6500	4.0	0.42	2.0	117	30
17	333	352	13	1.3	PH731_0050K202_0350 EZ303U	823	823	1116	172.8	9675/56	4000	4000	6500	4.0	0.53	2.0	117	31
18	141	144	6.8	3.1	PH731_0070K102_0230 EZ301U	425	425	1160	162.9	1140/7	4000	4000	7000	4.0	0.28	2.0	111	22
18	241	255	12	1.8	PH731_0070K102_0230 EZ302U	758	758	1160	162.9	1140/7	4000	4000	7000	4.0	0.38	2.0	111	23
18	314	332	15	1.4	PH731_0070K102_0230 EZ303U	855	855	1160	162.9	1140/7	4000	4000	7000	4.0	0.49	2.0	111	23
18	425	455	21	1.0	PH731_0070K102_0230 EZ401U	869	869	1720	162.9	1140/7	4000	4000	7000	4.0	1.0	2.0	111	25
21	122	125	6.6	3.6	PH731_0070K102_0200 EZ301U	368	368	884	141.1	2821/20	4000	4000	7000	4.0	0.27	2.0	111	22
21	209	221	11	2.1	PH731_0070K102_0200 EZ302U	651	651	884	141.1	2821/20	4000	4000	7000	4.0	0.37	2.0	111	23
21	272	288	15	1.6	PH731_0070K102_0200 EZ303U	651	651	884	141.1	2821/20	4000	4000	7000	4.0	0.48	2.0	111	23
21	368	394	20	1.2	PH731_0070K102_0200 EZ401U	840	840	1604	141.1	2821/20	4000	4000	7000	4.0	1.0	2.0	111	25
21	364	390	17	1.2	PH731_0050K202_0280 EZ401U	882	924	1720	139.8	559/4	4000	4000	6500	4.0	1.1	2.0	117	32
24	106	109	6.3	4.1	PH731_0070K102_0175 EZ301U	321	321	932	122.9	2090/17	4000	4000	6000	4.0	0.33	2.0	111	22
24	182	192	11	2.4	PH731_0070K102_0175 EZ302U	572	572	932	122.9	2090/17	4000	4000	6000	4.0	0.43	2.0	111	23
24	237	251	14	1.9	PH731_0070K102_0175 EZ303U	687	687	932	122.9	2090/17	4000	4000	6000	4.0	0.54	2.0	111	23
24	321	343	19	1.4	PH731_0070K102_0175 EZ401U	869	869	1720	122.9	2090/17	4000	4000	6000	4.0	1.1	2.0	111	25

n_{2N} [rpm]	M_{2N} [Nm]	$M_{2,0}$ [Nm]	a_{th}	S	Type	M_{2acc} [Nm]	M_{2accHT} [Nm]	M_{2NOT} [Nm]	i	i_{exakt}	n_{1maxDB} EL1,2 [rpm]	n_{1maxDB} EL3,4,5,6 [rpm]	n_{1maxZB} [rpm]	$\Delta\varphi_2$ [arcmin]	J_1 [kgcm²]	$\Delta\varphi_{2red}$ [arcmin]	C_2 [Nm/ arcmin]	m [kg]
PH731K (n_{1N} = 3000 min^{-1}, $M_{2acc,max}$ = 880 Nm)																		
26	101	104	6.3	4.3	PH731_0070K102_0165 EZ301U	305	305	833	117.0	117/1	4000	4000	7000	4.0	0.29	2.0	111	22
26	173	183	11	2.5	PH731_0070K102_0165 EZ302U	545	545	833	117.0	117/1	4000	4000	7000	4.0	0.39	2.0	111	23
26	226	239	14	2.0	PH731_0070K102_0165 EZ303U	614	614	833	117.0	117/1	4000	4000	7000	4.0	0.50	2.0	111	23
26	305	327	19	1.4	PH731_0070K102_0165 EZ401U	840	840	1604	117.0	117/1	4000	4000	7000	4.0	1.0	2.0	111	25
26	172	181	9.2	2.6	PH731_0050K202_0230 EZ302U	540	540	879	115.9	14835/128	4000	4000	6500	4.0	0.53	2.0	117	30
26	223	236	12	2.0	PH731_0050K202_0230 EZ303U	648	648	879	115.9	14835/128	4000	4000	6500	4.0	0.64	2.0	117	31
26	302	324	16	1.5	PH731_0050K202_0230 EZ401U	882	917	1720	115.9	14835/128	4000	4000	6500	4.0	1.2	2.0	117	32
26	100	102	10	3.5	PH731_0100K102_0115 EZ301U	302	302	877	115.7	2660/23	3600	3600	5500	3.5	0.43	1.5	105	22
26	171	181	18	2.0	PH731_0100K102_0115 EZ302U	538	538	877	115.7	2660/23	3600	3600	5500	3.5	0.53	1.5	105	23
26	223	236	23	1.6	PH731_0100K102_0115 EZ303U	575	575	877	115.7	2660/23	3600	3600	5500	3.5	0.64	1.5	105	23
26	302	323	31	1.2	PH731_0100K102_0115 EZ401U	575	575	1150	115.7	2660/23	3600	3600	5500	3.5	1.2	1.5	105	25
30	146	155	10	3.0	PH731_0070K102_0140 EZ302U	460	460	749	98.80	494/5	4000	4000	6000	4.0	0.48	2.0	111	23
30	190	201	13	2.3	PH731_0070K102_0140 EZ303U	552	552	749	98.80	494/5	4000	4000	6000	4.0	0.59	2.0	111	23
30	258	276	18	1.7	PH731_0070K102_0140 EZ401U	782	782	1720	98.80	494/5	4000	4000	6000	4.0	1.1	2.0	111	25
30	396	432	28	1.1	PH731_0070K102_0140 EZ501U	869	869	1720	98.80	494/5	4000	4000	6000	4.0	3.1	2.0	111	26
30	432	478	30	1.0	PH731_0070K102_0140 EZ402U	869	869	1720	98.80	494/5	4000	4000	6000	4.0	1.8	2.0	111	26
32	137	145	17	2.6	PH731_0100K102_0092 EZ302U	431	431	701	92.49	17480/189	3600	3600	5500	3.5	0.63	1.5	105	23
32	178	189	22	2.0	PH731_0100K102_0092 EZ303U	517	517	701	92.49	17480/189	3600	3600	5500	3.5	0.74	1.5	105	23
32	241	258	29	1.5	PH731_0100K102_0092 EZ401U	575	575	1150	92.49	17480/189	3600	3600	5500	3.5	1.3	1.5	105	25
34	131	138	10	3.4	PH731_0070K102_0125 EZ302U	411	411	669	88.33	3003/34	4000	4000	6000	4.0	0.45	2.0	111	23
34	170	180	13	2.6	PH731_0070K102_0125 EZ303U	494	494	669	88.33	3003/34	4000	4000	6000	4.0	0.56	2.0	111	23
34	230	247	18	1.9	PH731_0070K102_0125 EZ401U	699	699	1604	88.33	3003/34	4000	4000	6000	4.0	1.1	2.0	111	25
34	354	387	27	1.2	PH731_0070K102_0125 EZ501U	840	840	1604	88.33	3003/34	4000	4000	6000	4.0	3.1	2.0	111	26
34	387	428	30	1.1	PH731_0070K102_0125 EZ402U	840	840	1604	88.33	3003/34	4000	4000	6000	4.0	1.8	2.0	111	26
34	129	137	8.6	3.4	PH731_0050K202_0175 EZ302U	407	407	662	87.35	2795/32	3900	3900	5500	4.0	0.66	2.0	117	30
34	168	178	11	2.6	PH731_0050K202_0175 EZ303U	488	488	662	87.35	2795/32	3900	3900	5500	4.0	0.77	2.0	117	31
34	228	244	15	1.9	PH731_0050K202_0175 EZ401U	691	691	1720	87.35	2795/32	3900	3900	5500	4.0	1.3	2.0	117	32
34	350	382	23	1.3	PH731_0050K202_0175 EZ501U	882	924	1720	87.35	2795/32	3900	3900	5500	4.0	3.3	2.0	117	33
34	382	423	25	1.2	PH731_0050K202_0175 EZ402U	882	924	1720	87.35	2795/32	3900	3900	5500	4.0	2.0	2.0	117	33
36	123	130	16	2.8	PH731_0100K102_0083 EZ302U	387	387	630	83.09	1911/23	3600	3600	5500	3.5	0.59	1.5	105	23
36	160	169	21	2.2	PH731_0100K102_0083 EZ303U	464	464	630	83.09	1911/23	3600	3600	5500	3.5	0.70	1.5	105	23
36	217	232	28	1.6	PH731_0100K102_0083 EZ401U	575	575	1150	83.09	1911/23	3600	3600	5500	3.5	1.2	1.5	105	25
36	333	364	44	1.1	PH731_0100K102_0083 EZ501U	575	575	1150	83.09	1911/23	3600	3600	5500	3.5	3.2	1.5	105	26
37	120	127	9.8	3.7	PH731_0070K102_0115 EZ302U	377	377	614	80.96	1862/23	3600	3600	5500	4.0	0.54	2.0	111	23
37	156	165	13	2.8	PH731_0070K102_0115 EZ303U	452	452	614	80.96	1862/23	3600	3600	5500	4.0	0.65	2.0	111	23
37	211	226	17	2.1	PH731_0070K102_0115 EZ401U	641	641	1720	80.96	1862/23	3600	3600	5500	4.0	1.2	2.0	111	25
37	324	354	26	1.4	PH731_0070K102_0115 EZ501U	869	869	1720	80.96	1862/23	3600	3600	5500	4.0	3.1	2.0	111	26
37	354	392	29	1.2	PH731_0070K102_0115 EZ402U	869	869	1720	80.96	1862/23	3600	3600	5500	4.0	1.9	2.0	111	26
42	105	111	10	3.8	PH731_0070K102_0100 EZ302U	330	330	538	70.98	3549/50	4000	4000	6000	4.0	0.52	2.0	111	23
42	137	145	14	2.9	PH731_0070K102_0100 EZ303U	397	397	538	70.98	3549/50	4000	4000	6000	4.0	0.63	2.0	111	23
42	185	198	17	2.4	PH731_0070K102_0100 EZ401U	562	562	1604	70.98	3549/50	4000	4000	6000	4.0	1.2	2.0	111	25
42	284	311	26	1.5	PH731_0070K102_0100 EZ501U	840	840	1604	70.98	3549/50	4000	4000	6000	4.0	3.1	2.0	111	26
42	311	344	28	1.4	PH731_0070K102_0100 EZ402U	840	840	1604	70.98	3549/50	4000	4000	6000	4.0	1.9	2.0	111	26
43	181	193	14	2.4	PH731_0050K202_0140 EZ401U	548	548	1720	69.26	14405/208	3900	3900	5500	4.0	1.4	2.0	117	32
43	277	303	22	1.6	PH731_0050K202_0140 EZ501U	882	924	1720	69.26	14405/208	3900	3900	5500	4.0	3.4	2.0	117	33
43	303	335	24	1.5	PH731_0050K202_0140 EZ402U	882	924	1720	69.26	14405/208	3900	3900	5500	4.0	2.1	2.0	117	33
45	98	104	15	3.6	PH731_0100K102_0066 EZ302U	309	309	504	66.44	598/9	3600	3600	5500	3.5	0.71	1.5	105	23
45	128	135	20	2.7	PH731_0100K102_0066 EZ303U	371	371	504	66.44	598/9	3600	3600	5500	3.5	0.82	1.5	105	23
45	173	186	27	2.0	PH731_0100K102_0066 EZ401U	526	526	1150	66.44	598/9	3600	3600	5500	3.5	1.4	1.5	105	25
45	266	291	41	1.3	PH731_0100K102_0066 EZ501U	575	575	1150	66.44	598/9	3600	3600	5500	3.5	3.3	1.5	105	26
45	291	322	45	1.2	PH731_0100K102_0066 EZ402U	575	575	1150	66.44	598/9	3600	3600	5500	3.5	2.1	1.5	105	26
46	96	101	11	3.8	PH731_0070K102_0092 EZ302U	301	301	491	64.74	1748/27	3600	3600	5500	4.0	0.63	2.0	111	23
46	125	132	15	2.9	PH731_0070K102_0092 EZ303U	362	362	491	64.74	1748/27	3600	3600	5500	4.0	0.74	2.0	111	23
46	169	181	16	2.6	PH731_0070K102_0092 EZ401U	512	512	1720	64.74	1748/27	3600	3600	5500	4.0	1.3	2.0	111	25
46	259	283	25	1.7	PH731_0070K102_0092 EZ501U	868	868	1720	64.74	1748/27	3600	3600	5500	4.0	3.2	2.0	111	26
46	283	314	27	1.6	PH731_0070K102_0092 EZ402U	868	868	1720	64.74	1748/27	3600	3600	5500	4.0	2.0	2.0	111	26
46	416	518	40	1.1	PH731_0070K102_0092 EZ404U	868	868	1720	64.74	1748/27	3600	3600	5500	4.0	3.3	2.0	111	28
50	156	168	26	2.2	PH731_0100K102_0060 EZ401U	475	475	1150	60.00	60/1	3300	3300	5000	3.5	1.4	1.5	105	25
50	240	263	40	1.5	PH731_0100K102_0060 EZ501U	575	575	1150	60.00	60/1	3300	3300	5000	3.5	3.4	1.5	105	26
50	263	291	44	1.3	PH731_0100K102_0060 EZ402U	575	575	1150	60.00	60/1	3300	3300	5000	3.5	2.1	1.5	105	26
52	86	91	12	3.8	PH731_0070K102_0083 EZ302U	271	271	441	58.16	13377/230	3600	3600	5500	4.0	0.60	2.0	111	23
52	112	119	16	2.9	PH731_0070K102_0083 EZ303U	325	325	441	58.16	13377/230	3600	3600	5500	4.0	0.71	2.0	111	23
52	152	162	16	2.9	PH731_0070K102_0083 EZ401U	460	460	1604	58.16	13377/230	3600	3600	5500	4.0	1.2	2.0	111	25
52	233	255	24	1.9	PH731_0070K102_0083 EZ501U	838	838	1604	58.16	13377/230	3600	3600	5500	4.0	3.2	2.0	111	26

n_{2N} [rpm]	M_{2N} [Nm]	$M_{2,0}$ [Nm]	a_{th}	S	Type	M_{2acc} [Nm]	M_{2accHT} [Nm]	M_{2NOT} [Nm]	i	i_{exakt}	n_{1maxDB} EL1,2 [rpm]	n_{1maxDB} EL3,4,5,6 [rpm]	n_{1maxZB} [rpm]	$\Delta\varphi_2$ [arcmin]	J_1 [kgcm²]	$\Delta\varphi_{2red}$ [arcmin]	C_2 [Nm/ arcmin]	m [kg]
PH731K (n_{1N} = 3000 min^{-1}, $M_{2acc,max}$ = 880 Nm)																		
52	255	282	27	1.7	PH731_0070K102_0083 EZ402U	838	838	1604	58.16	13377/230	3600	3600	5500	4.0	1.9	2.0	111	26
52	374	466	39	1.2	PH731_0070K102_0083 EZ404U	838	838	1604	58.16	13377/230	3600	3600	5500	4.0	3.3	2.0	111	28
52	401	433	42	1.1	PH731_0070K102_0083 EZ502U	838	838	1604	58.16	13377/230	3600	3600	5500	4.0	5.5	2.0	111	27
52	401	450	42	1.1	PH731_0070K102_0083 EZ701U	838	838	1604	58.16	13377/230	3600	3600	5500	4.0	8.8	2.0	111	29
52	85	90	11	3.8	PH731_0050K202_0115 EZ302U	269	269	438	57.73	6235/108	3500	3500	5000	4.0	0.97	2.0	117	30
52	111	118	14	2.9	PH731_0050K202_0115 EZ303U	323	323	438	57.73	6235/108	3500	3500	5000	4.0	1.1	2.0	117	31
52	151	161	14	2.9	PH731_0050K202_0115 EZ401U	457	457	1720	57.73	6235/108	3500	3500	5000	4.0	1.6	2.0	117	32
52	231	253	21	1.9	PH731_0050K202_0115 EZ501U	860	860	1720	57.73	6235/108	3500	3500	5000	4.0	3.6	2.0	117	33
52	253	280	23	1.7	PH731_0050K202_0115 EZ402U	860	860	1720	57.73	6235/108	3500	3500	5000	4.0	2.3	2.0	117	33
52	371	462	34	1.2	PH731_0050K202_0115 EZ404U	882	924	1720	57.73	6235/108	3500	3500	5000	4.0	3.7	2.0	117	35
52	398	430	36	1.1	PH731_0050K202_0115 EZ502U	882	924	1720	57.73	6235/108	3500	3500	5000	4.0	5.9	2.0	117	35
52	398	446	36	1.1	PH731_0050K202_0115 EZ701U	882	924	1720	57.73	6235/108	3500	3500	5000	4.0	9.2	2.0	117	37
54	82	87	16	3.8	PH731_0100K102_0056 EZ302U	259	259	422	55.68	15200/273	3300	3300	5000	3.5	0.97	1.5	105	23
54	107	114	21	2.9	PH731_0100K102_0056 EZ303U	311	311	422	55.68	15200/273	3300	3300	5000	3.5	1.1	1.5	105	23
54	145	156	26	2.4	PH731_0100K102_0056 EZ401U	441	441	1150	55.68	15200/273	3300	3300	5000	3.5	1.6	1.5	105	25
54	223	244	40	1.6	PH731_0100K102_0056 EZ501U	575	575	1150	55.68	15200/273	3300	3300	5000	3.5	3.6	1.5	105	26
54	244	270	43	1.4	PH731_0100K102_0056 EZ402U	575	575	1150	55.68	15200/273	3300	3300	5000	3.5	2.3	1.5	105	26
65	69	73	14	3.8	PH731_0070K102_0066 EZ302U	217	217	353	46.51	2093/45	3600	3600	5500	4.0	0.73	2.0	111	23
65	90	95	19	2.9	PH731_0070K102_0066 EZ303U	260	260	353	46.51	2093/45	3600	3600	5500	4.0	0.84	2.0	111	23
65	121	130	16	3.4	PH731_0070K102_0066 EZ401U	368	368	1410	46.51	2093/45	3600	3600	5500	4.0	1.4	2.0	111	25
65	186	204	25	2.2	PH731_0070K102_0066 EZ501U	693	693	1410	46.51	2093/45	3600	3600	5500	4.0	3.3	2.0	111	26
65	204	225	27	2.0	PH731_0070K102_0066 EZ402U	693	693	1410	46.51	2093/45	3600	3600	5500	4.0	2.1	2.0	111	26
65	299	372	39	1.4	PH731_0070K102_0066 EZ404U	778	778	1410	46.51	2093/45	3600	3600	5500	4.0	3.4	2.0	111	28
65	320	346	42	1.3	PH731_0070K102_0066 EZ502U	778	778	1410	46.51	2093/45	3600	3600	5500	4.0	5.6	2.0	111	27
65	320	359	42	1.3	PH731_0070K102_0066 EZ701U	778	778	1410	46.51	2093/45	3600	3600	5500	4.0	8.9	2.0	111	29
65	120	128	13	3.7	PH731_0050K202_0092 EZ401U	364	364	1393	45.95	11395/248	3500	3500	5000	4.0	1.9	2.0	117	32
65	184	201	20	2.4	PH731_0050K202_0092 EZ501U	685	685	1393	45.95	11395/248	3500	3500	5000	4.0	3.9	2.0	117	33
65	201	223	22	2.2	PH731_0050K202_0092 EZ402U	685	685	1393	45.95	11395/248	3500	3500	5000	4.0	2.6	2.0	117	33
65	295	368	32	1.5	PH731_0050K202_0092 EZ404U	882	924	1393	45.95	11395/248	3500	3500	5000	4.0	3.9	2.0	117	35
65	317	342	34	1.4	PH731_0050K202_0092 EZ502U	882	924	1393	45.95	11395/248	3500	3500	5000	4.0	6.2	2.0	117	35
65	317	355	34	1.4	PH731_0050K202_0092 EZ701U	856	856	1720	45.95	11395/248	3500	3500	5000	4.0	9.5	2.0	117	37
65	415	475	45	1.1	PH731_0050K202_0092 EZ503U	882	924	1393	45.95	11395/248	3500	3500	5000	4.0	8.5	2.0	117	36
71	110	117	16	3.6	PH731_0070K102_0060 EZ401U	332	332	1273	42.00	42/1	3300	3300	5000	4.0	1.4	2.0	111	25
71	168	184	25	2.4	PH731_0070K102_0060 EZ501U	626	626	1273	42.00	42/1	3300	3300	5000	4.0	3.4	2.0	111	26
71	184	203	27	2.2	PH731_0070K102_0060 EZ402U	626	626	1273	42.00	42/1	3300	3300	5000	4.0	2.1	2.0	111	26
71	270	336	40	1.5	PH731_0070K102_0060 EZ404U	752	752	1273	42.00	42/1	3300	3300	5000	4.0	3.5	2.0	111	28
71	289	313	43	1.4	PH731_0070K102_0060 EZ502U	752	752	1273	42.00	42/1	3300	3300	5000	4.0	5.7	2.0	111	27
71	289	325	43	1.4	PH731_0070K102_0060 EZ701U	752	752	1273	42.00	42/1	3300	3300	5000	4.0	9.0	2.0	111	29
71	379	434	56	1.0	PH731_0070K102_0060 EZ503U	752	752	1273	42.00	42/1	3300	3300	5000	4.0	8.1	2.0	111	29
71	81	86	17	2.9	PH731_0050K202_0084 EZ303U	235	235	318	41.99	12470/297	3500	3500	5000	4.0	1.2	2.0	117	31
71	109	117	13	4.0	PH731_0050K202_0084 EZ401U	332	332	1273	41.99	12470/297	3500	3500	5000	4.0	1.7	2.0	117	32
71	168	184	19	2.6	PH731_0050K202_0084 EZ501U	626	626	1273	41.99	12470/297	3500	3500	5000	4.0	3.7	2.0	117	33
71	184	203	21	2.4	PH731_0050K202_0084 EZ402U	626	626	1273	41.99	12470/297	3500	3500	5000	4.0	2.4	2.0	117	33
71	270	336	31	1.6	PH731_0050K202_0084 EZ404U	882	924	1273	41.99	12470/297	3500	3500	5000	4.0	3.8	2.0	117	35
71	289	313	33	1.5	PH731_0050K202_0084 EZ502U	882	924	1273	41.99	12470/297	3500	3500	5000	4.0	6.0	2.0	117	35
71	289	325	33	1.5	PH731_0050K202_0084 EZ701U	782	782	1720	41.99	12470/297	3500	3500	5000	4.0	9.3	2.0	117	37
71	379	434	44	1.2	PH731_0050K202_0084 EZ503U	882	924	1273	41.99	12470/297	3500	3500	5000	4.0	8.4	2.0	117	36
75	77	82	27	2.9	PH731_0100K102_0040 EZ303U	224	224	303	40.00	40/1	3300	3300	5000	3.5	1.3	1.5	105	23
75	104	112	24	3.4	PH731_0100K102_0040 EZ401U	317	317	1150	40.00	40/1	3300	3300	5000	3.5	1.8	1.5	105	25
75	160	175	36	2.2	PH731_0100K102_0040 EZ501U	575	575	1150	40.00	40/1	3300	3300	5000	3.5	3.8	1.5	105	26
75	175	194	40	2.0	PH731_0100K102_0040 EZ402U	575	575	1150	40.00	40/1	3300	3300	5000	3.5	2.5	1.5	105	26
75	257	320	58	1.4	PH731_0100K102_0040 EZ404U	575	575	1150	40.00	40/1	3300	3300	5000	3.5	3.9	1.5	105	28
75	276	298	63	1.3	PH731_0100K102_0040 EZ502U	575	575	1150	40.00	40/1	3300	3300	5000	3.5	6.1	1.5	105	27
75	276	309	63	1.3	PH731_0100K102_0040 EZ701U	575	575	1150	40.00	40/1	3300	3300	5000	3.5	9.4	1.5	105	29
77	58	61	16	3.8	PH731_0070K102_0056 EZ302U	181	181	296	38.98	1520/39	3300	3300	5000	4.0	1.0	2.0	111	23
77	75	79	21	2.9	PH731_0070K102_0056 EZ303U	218	218	296	38.98	1520/39	3300	3300	5000	4.0	1.1	2.0	111	23
77	102	109	16	3.8	PH731_0070K102_0056 EZ401U	309	309	1182	38.98	1520/39	3300	3300	5000	4.0	1.6	2.0	111	25
77	156	171	25	2.5	PH731_0070K102_0056 EZ501U	581	581	1182	38.98	1520/39	3300	3300	5000	4.0	3.6	2.0	111	26
77	171	189	27	2.3	PH731_0070K102_0056 EZ402U	581	581	1182	38.98	1520/39	3300	3300	5000	4.0	2.3	2.0	111	26
77	250	312	40	1.5	PH731_0070K102_0056 EZ404U	733	733	1182	38.98	1520/39	3300	3300	5000	4.0	3.7	2.0	111	28
77	269	290	43	1.4	PH731_0070K102_0056 EZ502U	733	733	1182	38.98	1520/39	3300	3300	5000	4.0	5.9	2.0	111	27
77	269	301	43	1.4	PH731_0070K102_0056 EZ701U	726	726	1182	38.98	1520/39	3300	3300	5000	4.0	9.2	2.0	111	29
77	352	403	56	1.1	PH731_0070K102_0056 EZ503U	733	733	1182	38.98	1520/39	3300	3300	5000	4.0	8.3	2.0	111	29
90	134	146	18	3.3	PH731_0050K202_0067 EZ501U	498	498	1013	33.42	11395/341	3500	3500	5000	4.0	4.1	2.0	117	33

n_{2N} [rpm]	M_{2N} [Nm]	$M_{2,0}$ [Nm]	a_{th}	S	Type	M_{2acc} [Nm]	M_{2accHT} [Nm]	M_{2NOT} [Nm]	i	i_{exakt}	n_{1maxDB} EL1,2 [rpm]	n_{1maxDB} EL3,4,5,6 [rpm]	n_{1maxZB} [rpm]	$\Delta\varphi_2$ [arcmin]	J_1 [kgcm²]	$\Delta\varphi_{2red}$ [arcmin]	C_2 [Nm/arcmin]	m [kg]
PH731K (n_{1N} = 3000 min^{-1}, $M_{2acc,max}$ = 880 Nm)																		
90	146	162	20	3.0	PH731_0050K202_0067 EZ402U	498	498	1013	33.42	11395/341	3500	3500	5000	4.0	2.8	2.0	117	33
90	215	268	29	2.0	PH731_0050K202_0067 EZ404U	747	747	1013	33.42	11395/341	3500	3500	5000	4.0	4.1	2.0	117	35
90	230	249	31	1.9	PH731_0050K202_0067 EZ502U	747	747	1013	33.42	11395/341	3500	3500	5000	4.0	6.4	2.0	117	35
90	230	258	31	1.9	PH731_0050K202_0067 EZ701U	622	622	1720	33.42	11395/341	3500	3500	5000	4.0	9.7	2.0	117	37
90	302	345	41	1.5	PH731_0050K202_0067 EZ503U	747	747	1013	33.42	11395/341	3500	3500	5000	4.0	8.7	2.0	117	36
90	373	448	51	1.2	PH731_0050K202_0067 EZ702U	882	924	1720	33.42	11395/341	3500	3500	5000	4.0	15	2.0	117	39
90	420	498	57	1.0	PH731_0050K202_0067 EZ505U	882	924	1720	33.42	11395/341	3500	3500	5000	4.0	13	2.0	117	39
100	120	131	18	3.7	PH731_0050K202_0060 EZ501U	447	447	909	30.00	30/1	3000	3000	4500	4.0	4.7	2.0	117	33
100	131	145	19	3.4	PH731_0050K202_0060 EZ402U	447	447	909	30.00	30/1	3000	3000	4500	4.0	3.4	2.0	117	33
100	193	240	29	2.3	PH731_0050K202_0060 EZ404U	670	670	909	30.00	30/1	3000	3000	4500	4.0	4.7	2.0	117	35
100	207	223	31	2.1	PH731_0050K202_0060 EZ502U	670	670	909	30.00	30/1	3000	3000	4500	4.0	7.0	2.0	117	35
100	207	232	31	2.1	PH731_0050K202_0060 EZ701U	559	559	1720	30.00	30/1	3000	3000	4500	4.0	10	2.0	117	37
100	271	310	40	1.6	PH731_0050K202_0060 EZ503U	670	670	909	30.00	30/1	3000	3000	4500	4.0	9.3	2.0	117	36
100	335	402	50	1.3	PH731_0050K202_0060 EZ702U	882	924	1720	30.00	30/1	3000	3000	4500	4.0	15	2.0	117	39
100	377	447	56	1.2	PH731_0050K202_0060 EZ505U	882	924	1720	30.00	30/1	3000	3000	4500	4.0	14	2.0	117	39
107	54	57	27	2.9	PH731_0070K102_0040 EZ303U	157	157	212	28.00	28/1	3300	3300	5000	4.0	1.4	2.0	111	23
107	73	78	17	4.8	PH731_0070K102_0040 EZ401U	222	222	849	28.00	28/1	3300	3300	5000	4.0	1.9	2.0	111	25
107	112	123	26	3.1	PH731_0070K102_0040 EZ501U	417	417	849	28.00	28/1	3300	3300	5000	4.0	3.9	2.0	111	26
107	123	136	28	2.8	PH731_0070K102_0040 EZ402U	417	417	849	28.00	28/1	3300	3300	5000	4.0	2.6	2.0	111	26
107	180	224	41	1.9	PH731_0070K102_0040 EZ404U	626	626	849	28.00	28/1	3300	3300	5000	4.0	3.9	2.0	111	28
107	193	209	44	1.8	PH731_0070K102_0040 EZ502U	626	626	849	28.00	28/1	3300	3300	5000	4.0	6.2	2.0	111	27
107	193	216	44	1.8	PH731_0070K102_0040 EZ701U	521	521	849	28.00	28/1	3300	3300	5000	4.0	9.5	2.0	111	29
107	253	289	58	1.4	PH731_0070K102_0040 EZ503U	626	626	849	28.00	28/1	3300	3300	5000	4.0	8.5	2.0	111	29
116	178	200	30	2.5	PH731_0050K202_0052 EZ701U	482	482	1720	25.89	10535/407	3000	3000	4500	4.0	10	2.0	117	37
116	289	347	48	1.5	PH731_0050K202_0052 EZ702U	882	913	1720	25.89	10535/407	3000	3000	4500	4.0	15	2.0	117	39
116	325	386	54	1.4	PH731_0050K202_0052 EZ505U	882	913	1720	25.89	10535/407	3000	3000	4500	4.0	14	2.0	117	39
116	398	501	66	1.1	PH731_0050K202_0052 EZ703U	882	913	1720	25.89	10535/407	3000	3000	4500	4.0	23	2.0	117	41
150	138	155	28	3.2	PH731_0050K202_0040 EZ701U	372	372	1516	20.00	20/1	3000	3000	4500	4.0	11	2.0	117	37
150	223	268	45	2.0	PH731_0050K202_0040 EZ702U	764	764	1516	20.00	20/1	3000	3000	4500	4.0	16	2.0	117	39
150	251	298	51	1.8	PH731_0050K202_0040 EZ505U	838	838	1516	20.00	20/1	3000	3000	4500	4.0	15	2.0	117	39
150	307	387	62	1.4	PH731_0050K202_0040 EZ703U	838	838	1516	20.00	20/1	3000	3000	4500	4.0	24	2.0	117	41
188	110	124	27	3.2	PH731_0040K202_0040 EZ701U	298	298	1212	16.00	16/1	3000	3000	4500	4.5	11	2.5	100	37
188	179	215	45	2.0	PH731_0040K202_0040 EZ702U	611	611	1212	16.00	16/1	3000	3000	4500	4.5	16	2.5	100	39
188	201	238	50	1.8	PH731_0040K202_0040 EZ505U	670	670	1212	16.00	16/1	3000	3000	4500	4.5	15	2.5	100	39
188	246	310	61	1.4	PH731_0040K202_0040 EZ703U	670	670	1212	16.00	16/1	3000	3000	4500	4.5	24	2.5	100	41
PH731K (n_{1N} = 4500 min^{-1}, $M_{2acc,max}$ = 880 Nm)																		
98	406	655	44	1.1	PH731_0050K202_0092 EZ505U	882	924	1720	45.95	11395/248	3500	3500	5000	4.0	13	2.0	117	39
107	371	598	43	1.2	PH731_0050K202_0084 EZ505U	882	924	1720	41.99	12470/297	3500	3500	5000	4.0	13	2.0	117	39
135	296	476	40	1.5	PH731_0050K202_0067 EZ505U	882	924	1720	33.42	11395/341	3500	3500	5000	4.0	13	2.0	117	39
135	377	622	51	1.2	PH731_0050K202_0067 EZ703U	882	924	1720	33.42	11395/341	3500	3500	5000	4.0	23	2.0	117	41
150	265	427	39	1.7	PH731_0050K202_0060 EZ505U	882	924	1720	30.00	30/1	3000	3000	4500	4.0	14	2.0	117	39
150	338	559	50	1.3	PH731_0050K202_0060 EZ703U	882	924	1720	30.00	30/1	3000	3000	4500	4.0	23	2.0	117	41
174	229	369	40	1.8	PH731_0050K202_0052 EZ505U	882	913	1720	25.89	10535/407	3000	3000	4500	4.0	14	2.0	117	39
174	292	482	50	1.4	PH731_0050K202_0052 EZ703U	882	913	1720	25.89	10535/407	3000	3000	4500	4.0	23	2.0	117	41
225	177	285	40	2.2	PH731_0050K202_0040 EZ505U	838	838	1516	20.00	20/1	3000	3000	4500	4.0	15	2.0	117	39
225	225	372	51	1.7	PH731_0050K202_0040 EZ703U	838	838	1516	20.00	20/1	3000	3000	4500	4.0	24	2.0	117	41
281	142	228	40	2.2	PH731_0040K202_0040 EZ505U	670	670	1212	16.00	16/1	3000	3000	4500	4.5	15	2.5	100	39
281	180	298	51	1.7	PH731_0040K202_0040 EZ703U	670	670	1212	16.00	16/1	3000	3000	4500	4.5	24	2.5	100	41
PH731K (n_{1N} = 6000 min^{-1}, $M_{2acc,max}$ = 880 Nm)																		
12	406	434	8.6	1.1	PH731_0070K102_0700 EZ301U	561	561	1014	490.2	2451/5	4000	4000	7000	4.0	0.20	2.0	111	22
15	325	347	8.1	1.4	PH731_0070K102_0560 EZ301U	690	690	1248	392.7	1178/3	4000	4000	7000	4.0	0.21	2.0	111	22
17	292	312	10	1.2	PH731_0070K102_0500 EZ301U	403	403	728	352.2	35217/100	4000	4000	7000	4.0	0.21	2.0	111	22
17	291	311	13	1.2	PH731_0100K102_0350 EZ301U	575	575	1150	351.1	7372/21	4000	4000	7000	3.5	0.23	1.5	105	22
18	272	291	7.8	1.6	PH731_0070K102_0470 EZ301U	819	819	1482	328.4	2299/7	4000	4000	7000	4.0	0.22	2.0	111	22
21	234	250	8.0	1.8	PH731_0070K102_0400 EZ301U	496	496	896	282.1	2821/10	4000	4000	7000	4.0	0.21	2.0	111	22
21	394	441	13	1.0	PH731_0070K102_0400 EZ302U	496	496	896	282.1	2821/10	4000	4000	7000	4.0	0.31	2.0	111	23
21	232	248	12	1.5	PH731_0100K102_0280 EZ301U	575	575	1150	280.5	5890/21	4000	4000	7000	3.5	0.26	1.5	105	22
22	388	434	11	1.1	PH731_0050K202_0560 EZ302U	882	915	1407	277.7	6665/24	4000	4000	6500	4.0	0.34	2.0	117	30
24	204	217	7.2	2.2	PH731_0070K102_0350 EZ301U	641	641	1428	245.7	3686/15	4000	4000	7000	4.0	0.23	2.0	111	22
24	343	384	12	1.3	PH731_0070K102_0350 EZ302U	869	869	1428	245.7	3686/15	4000	4000	7000	4.0	0.33	2.0	111	23
25	196	209	7.1	2.3	PH731_0070K102_0340 EZ301U	589	589	1064	235.9	4719/20	4000	4000	7000	4.0	0.22	2.0	111	22
25	330	369	12	1.3	PH731_0070K102_0340 EZ302U	589	589	1064	235.9	4719/20	4000	4000	7000	4.0	0.32	2.0	111	23
25	431	494	16	1.0	PH731_0070K102_0340 EZ303U	589	589	1064	235.9	4719/20	4000	4000	7000	4.0	0.43	2.0	111	23
26	193	206	12	1.8	PH731_0100K102_0230 EZ301U	575	575	1150	232.7	11400/49	4000	4000	7000	3.5	0.28	1.5	105	22

n_{2N} [rpm]	M_{2N} [Nm]	$M_{2,0}$ [Nm]	a_{th}	S	Type	M_{2acc} [Nm]	M_{2accHT} [Nm]	M_{2NOT} [Nm]	i	i_{exakt}	n_{1maxDB} EL1,2 [rpm]	n_{1maxDB} EL3,4,5,6 [rpm]	n_{1maxZB} [rpm]	$\Delta\varphi_2$ [arcmin]	J_1 [kgcm²]	$\Delta\varphi_{2red}$ [arcmin]	C_2 [Nm/arcmin]	m [kg]
PH731K (n_{1N} = 6000 min^{-1}, $M_{2acc,max}$ = 880 Nm)																		
26	325	364	20	1.1	PH731_0100K102_0230 EZ302U	575	575	1150	232.7	11400/49	4000	4000	7000	3.5	0.38	1.5	105	23
26	323	362	10	1.4	PH731_0050K202_0460 EZ302U	882	924	1343	231.1	1849/8	4000	4000	6500	4.0	0.36	2.0	117	30
26	422	484	14	1.0	PH731_0050K202_0460 EZ303U	882	924	1343	231.1	1849/8	4000	4000	6500	4.0	0.47	2.0	117	31
31	163	174	6.8	2.7	PH731_0070K102_0280 EZ301U	512	512	1230	196.3	589/3	4000	4000	7000	4.0	0.26	2.0	111	22
31	274	307	12	1.6	PH731_0070K102_0280 EZ302U	869	869	1230	196.3	589/3	4000	4000	7000	4.0	0.36	2.0	111	23
31	358	411	15	1.2	PH731_0070K102_0280 EZ303U	869	869	1230	196.3	589/3	4000	4000	7000	4.0	0.47	2.0	111	23
31	421	512	18	1.0	PH731_0070K102_0280 EZ401U	869	869	1720	196.3	589/3	4000	4000	7000	4.0	1.0	2.0	111	25
34	146	156	6.6	3.0	PH731_0070K102_0250 EZ301U	460	460	1026	176.5	8827/50	4000	4000	7000	4.0	0.24	2.0	111	22
34	247	276	11	1.8	PH731_0070K102_0250 EZ302U	756	756	1026	176.5	8827/50	4000	4000	7000	4.0	0.34	2.0	111	23
34	322	370	15	1.4	PH731_0070K102_0250 EZ303U	756	756	1026	176.5	8827/50	4000	4000	7000	4.0	0.45	2.0	111	23
34	378	460	17	1.2	PH731_0070K102_0250 EZ401U	774	774	1401	176.5	8827/50	4000	4000	7000	4.0	0.98	2.0	111	25
35	241	270	9.6	1.8	PH731_0050K202_0350 EZ302U	804	804	1116	172.8	9675/56	4000	4000	6500	4.0	0.42	2.0	117	30
35	315	362	13	1.4	PH731_0050K202_0350 EZ303U	823	823	1116	172.8	9675/56	4000	4000	6500	4.0	0.53	2.0	117	31
35	370	450	15	1.2	PH731_0050K202_0350 EZ401U	882	924	1720	172.8	9675/56	4000	4000	6500	4.0	1.1	2.0	117	32
37	135	144	6.5	3.3	PH731_0070K102_0230 EZ301U	425	425	1160	162.9	1140/7	4000	4000	7000	4.0	0.28	2.0	111	22
37	227	255	11	1.9	PH731_0070K102_0230 EZ302U	758	758	1160	162.9	1140/7	4000	4000	7000	4.0	0.38	2.0	111	23
37	297	341	14	1.5	PH731_0070K102_0230 EZ303U	855	855	1160	162.9	1140/7	4000	4000	7000	4.0	0.49	2.0	111	23
37	349	425	17	1.3	PH731_0070K102_0230 EZ401U	869	869	1720	162.9	1140/7	4000	4000	7000	4.0	1.0	2.0	111	25
43	117	125	6.3	3.8	PH731_0070K102_0200 EZ301U	368	368	884	141.1	2821/20	4000	4000	7000	4.0	0.27	2.0	111	22
43	197	221	11	2.2	PH731_0070K102_0200 EZ302U	651	651	884	141.1	2821/20	4000	4000	7000	4.0	0.37	2.0	111	23
43	257	296	14	1.7	PH731_0070K102_0200 EZ303U	651	651	884	141.1	2821/20	4000	4000	7000	4.0	0.48	2.0	111	23
43	302	368	16	1.5	PH731_0070K102_0200 EZ401U	840	840	1604	141.1	2821/20	4000	4000	7000	4.0	1.0	2.0	111	25
43	299	364	14	1.5	PH731_0050K202_0280 EZ401U	882	924	1720	139.8	559/4	4000	4000	6500	4.0	1.1	2.0	117	32
49	102	109	6.1	4.3	PH731_0070K102_0175 EZ301U	321	321	932	122.9	2090/17	4000	4000	6000	4.0	0.33	2.0	111	22
49	172	192	10	2.6	PH731_0070K102_0175 EZ302U	572	572	932	122.9	2090/17	4000	4000	6000	4.0	0.43	2.0	111	23
49	224	258	13	2.0	PH731_0070K102_0175 EZ303U	687	687	932	122.9	2090/17	4000	4000	6000	4.0	0.54	2.0	111	23
49	263	321	16	1.7	PH731_0070K102_0175 EZ401U	869	869	1720	122.9	2090/17	4000	4000	6000	4.0	1.1	2.0	111	25
49	389	504	23	1.1	PH731_0070K102_0175 EZ501U	869	869	1720	122.9	2090/17	4000	4000	6000	4.0	3.0	2.0	111	26
49	401	561	24	1.1	PH731_0070K102_0175 EZ402U	869	869	1720	122.9	2090/17	4000	4000	6000	4.0	1.8	2.0	111	26
51	97	104	6.0	4.5	PH731_0070K102_0165 EZ301U	305	305	833	117.0	117/1	4000	4000	7000	4.0	0.29	2.0	111	22
51	163	183	10	2.7	PH731_0070K102_0165 EZ302U	545	545	833	117.0	117/1	4000	4000	7000	4.0	0.39	2.0	111	23
51	214	245	13	2.1	PH731_0070K102_0165 EZ303U	614	614	833	117.0	117/1	4000	4000	7000	4.0	0.50	2.0	111	23
51	251	305	16	1.8	PH731_0070K102_0165 EZ401U	840	840	1604	117.0	117/1	4000	4000	7000	4.0	1.0	2.0	111	25
51	370	479	23	1.2	PH731_0070K102_0165 EZ501U	840	840	1604	117.0	117/1	4000	4000	7000	4.0	3.0	2.0	111	26
51	381	534	24	1.2	PH731_0070K102_0165 EZ402U	840	840	1604	117.0	117/1	4000	4000	7000	4.0	1.7	2.0	111	26
52	162	181	8.7	2.7	PH731_0050K202_0230 EZ302U	540	540	879	115.9	14835/128	4000	4000	6500	4.0	0.53	2.0	117	30
52	212	243	11	2.1	PH731_0050K202_0230 EZ303U	648	648	879	115.9	14835/128	4000	4000	6500	4.0	0.64	2.0	117	31
52	248	302	13	1.8	PH731_0050K202_0230 EZ401U	882	917	1720	115.9	14835/128	4000	4000	6500	4.0	1.2	2.0	117	32
52	367	475	20	1.2	PH731_0050K202_0230 EZ501U	882	924	1720	115.9	14835/128	4000	4000	6500	4.0	3.1	2.0	117	33
52	378	529	20	1.2	PH731_0050K202_0230 EZ402U	882	924	1720	115.9	14835/128	4000	4000	6500	4.0	1.9	2.0	117	33
61	138	155	10	3.0	PH731_0070K102_0140 EZ302U	460	460	749	98.80	494/5	4000	4000	6000	4.0	0.48	2.0	111	23
61	180	207	13	2.3	PH731_0070K102_0140 EZ303U	552	552	749	98.80	494/5	4000	4000	6000	4.0	0.59	2.0	111	23
61	212	258	16	2.0	PH731_0070K102_0140 EZ401U	782	782	1720	98.80	494/5	4000	4000	6000	4.0	1.1	2.0	111	25
61	313	405	23	1.3	PH731_0070K102_0140 EZ501U	869	869	1720	98.80	494/5	4000	4000	6000	4.0	3.1	2.0	111	26
61	322	451	24	1.3	PH731_0070K102_0140 EZ402U	869	869	1720	98.80	494/5	4000	4000	6000	4.0	1.8	2.0	111	26
68	123	138	10	3.3	PH731_0070K102_0125 EZ302U	411	411	669	88.33	3003/34	4000	4000	6000	4.0	0.45	2.0	111	23
68	161	185	13	2.5	PH731_0070K102_0125 EZ303U	494	494	669	88.33	3003/34	4000	4000	6000	4.0	0.56	2.0	111	23
68	189	230	16	2.1	PH731_0070K102_0125 EZ401U	699	699	1604	88.33	3003/34	4000	4000	6000	4.0	1.1	2.0	111	25
68	280	362	23	1.4	PH731_0070K102_0125 EZ501U	840	840	1604	88.33	3003/34	4000	4000	6000	4.0	3.1	2.0	111	26
68	288	403	24	1.4	PH731_0070K102_0125 EZ402U	840	840	1604	88.33	3003/34	4000	4000	6000	4.0	1.8	2.0	111	26
85	99	111	10	3.8	PH731_0070K102_0100 EZ302U	330	330	538	70.98	3549/50	4000	4000	6000	4.0	0.52	2.0	111	23
85	130	149	14	2.9	PH731_0070K102_0100 EZ303U	397	397	538	70.98	3549/50	4000	4000	6000	4.0	0.63	2.0	111	23
85	152	185	16	2.5	PH731_0070K102_0100 EZ401U	562	562	1604	70.98	3549/50	4000	4000	6000	4.0	1.2	2.0	111	25
85	225	291	24	1.7	PH731_0070K102_0100 EZ501U	840	840	1604	70.98	3549/50	4000	4000	6000	4.0	3.1	2.0	111	26
85	231	324	24	1.6	PH731_0070K102_0100 EZ402U	840	840	1604	70.98	3549/50	4000	4000	6000	4.0	1.9	2.0	111	26
85	344	516	36	1.1	PH731_0070K102_0100 EZ502U	840	840	1604	70.98	3549/50	4000	4000	6000	4.0	5.4	2.0	111	27
85	344	522	36	1.1	PH731_0070K102_0100 EZ701U	840	840	1604	70.98	3549/50	4000	4000	6000	4.0	8.7	2.0	111	29
PH831K (n_{1N} = 3000 min^{-1}, $M_{2acc,max}$ = 1850 Nm)																		
5.4	822	869	12	1.0	PH831_0100K202_0560 EZ302U	1392	1392	2784	555.4	6665/12	4000	4000	6500	3.5	0.34	1.5	260	49
6.2	720	760	8.4	1.2	PH831_0070K202_0690 EZ302U	1067	1067	1847	486.0	46655/96	4000	4000	6500	3.5	0.33	1.5	245	49
6.5	684	723	11	1.2	PH831_0100K202_0460 EZ302U	1392	1392	2686	462.3	1849/4	4000	4000	6500	3.5	0.37	1.5	260	49
7.7	576	608	7.1	1.7	PH831_0070K202_0560 EZ302U	1281	1281	1970	388.8	9331/24	4000	4000	6500	3.5	0.35	1.5	245	49
7.7	749	793	9.2	1.3	PH831_0070K202_0560 EZ303U	1281	1281	1970	388.8	9331/24	4000	4000	6500	3.5	0.46	1.5	245	49
8.5	523	553	11	1.2	PH831_0070K202_0500 EZ302U	776	776	1343	353.4	46655/132	4000	4000	6500	3.5	0.33	1.5	245	49

n_{2N} [rpm]	M_{2N} [Nm]	$M_{2,0}$ [Nm]	a_{th}	S	Type	M_{2acc} [Nm]	M_{2accHT} [Nm]	M_{2NOT} [Nm]	i	i_{exakt}	n_{1maxDB} EL1,2 [rpm]	n_{1maxDB} EL3,4,5,6 [rpm]	n_{1maxZB} [rpm]	$\Delta\varphi_2$ [arcmin]	J_1 [kgcm²]	$\Delta\varphi_{2red}$ [arcmin]	C_2 [Nm/ arcmin]	m [kg]
PH831K (n_{1N} = 3000 min^{-1}, $M_{2acc,max}$ = 1850 Nm)																		
8.7	512	541	11	1.7	PH831_0100K202_0350 EZ302U	1392	1392	2232	345.5	9675/28	4000	4000	6500	3.5	0.42	1.5	260	49
8.7	666	705	14	1.3	PH831_0100K202_0350 EZ303U	1392	1392	2232	345.5	9675/28	4000	4000	6500	3.5	0.53	1.5	260	49
9.3	479	506	6.8	2.1	PH831_0070K202_0460 EZ302U	1386	1386	1880	323.6	12943/40	4000	4000	6500	3.5	0.37	1.5	245	49
9.3	624	660	8.8	1.6	PH831_0070K202_0460 EZ303U	1386	1386	1880	323.6	12943/40	4000	4000	6500	3.5	0.48	1.5	245	49
9.3	844	904	12	1.2	PH831_0070K202_0460 EZ401U	1478	1478	2917	323.6	12943/40	4000	4000	6500	3.5	1.0	1.5	245	51
11	419	442	8.4	1.9	PH831_0070K202_0400 EZ302U	931	931	1432	282.8	9331/33	4000	4000	6500	3.5	0.35	1.5	245	49
11	545	577	11	1.4	PH831_0070K202_0400 EZ303U	931	931	1432	282.8	9331/33	4000	4000	6500	3.5	0.46	1.5	245	49
11	737	790	15	1.1	PH831_0070K202_0400 EZ401U	931	931	1432	282.8	9331/33	4000	4000	6500	3.5	0.99	1.5	245	51
11	729	781	18	1.2	PH831_0100K202_0280 EZ401U	1392	1392	2784	279.5	559/2	4000	4000	6500	3.5	1.1	1.5	260	51
11	726	778	8.9	1.5	PH831_0050K302_0560 EZ401U	1525	1525	2757	278.5	12255/44	3800	3800	6000	4.0	1.0	2.0	245	56
12	358	378	6.3	2.8	PH831_0070K202_0350 EZ302U	1126	1126	1562	241.9	1935/8	4000	4000	6500	3.5	0.42	1.5	245	49
12	466	493	8.2	2.1	PH831_0070K202_0350 EZ303U	1152	1152	1562	241.9	1935/8	4000	4000	6500	3.5	0.53	1.5	245	49
12	631	676	11	1.6	PH831_0070K202_0350 EZ401U	1478	1478	2917	241.9	1935/8	4000	4000	6500	3.5	1.1	1.5	245	51
12	969	1059	17	1.0	PH831_0070K202_0350 EZ501U	1478	1478	2917	241.9	1935/8	4000	4000	6500	3.5	3.0	1.5	245	52
13	348	368	6.2	2.9	PH831_0070K202_0340 EZ302U	1008	1008	1368	235.3	12943/55	4000	4000	6500	3.5	0.38	1.5	245	49
13	454	480	8.1	2.2	PH831_0070K202_0340 EZ303U	1008	1008	1368	235.3	12943/55	4000	4000	6500	3.5	0.49	1.5	245	49
13	614	657	11	1.6	PH831_0070K202_0340 EZ401U	1242	1242	2246	235.3	12943/55	4000	4000	6500	3.5	1.0	1.5	245	51
13	942	1030	17	1.1	PH831_0070K202_0340 EZ501U	1242	1242	2246	235.3	12943/55	4000	4000	6500	3.5	3.0	1.5	245	52
13	343	363	9.6	2.5	PH831_0100K202_0230 EZ302U	1079	1079	1757	231.8	14835/64	4000	4000	6500	3.5	0.53	1.5	260	49
13	447	473	12	1.9	PH831_0100K202_0230 EZ303U	1296	1296	1757	231.8	14835/64	4000	4000	6500	3.5	0.64	1.5	260	49
13	604	648	17	1.4	PH831_0100K202_0230 EZ401U	1392	1392	2784	231.8	14835/64	4000	4000	6500	3.5	1.2	1.5	260	51
13	603	646	8.5	1.8	PH831_0050K302_0460 EZ401U	1829	1829	3585	231.1	1849/8	3800	3800	6000	4.0	1.1	2.0	245	56
13	925	1012	13	1.2	PH831_0050K302_0460 EZ501U	1848	1848	3585	231.1	1849/8	3800	3800	6000	4.0	3.1	2.0	245	57
13	1012	1119	14	1.1	PH831_0050K302_0460 EZ402U	1848	1848	3585	231.1	1849/8	3800	3800	6000	4.0	1.8	2.0	245	57
15	510	547	10	2.0	PH831_0070K202_0280 EZ401U	1478	1478	2917	195.7	3913/20	4000	4000	6500	3.5	1.1	1.5	245	51
15	783	856	16	1.3	PH831_0070K202_0280 EZ501U	1478	1478	2917	195.7	3913/20	4000	4000	6500	3.5	3.1	1.5	245	52
15	856	947	18	1.2	PH831_0070K202_0280 EZ402U	1478	1478	2917	195.7	3913/20	4000	4000	6500	3.5	1.8	1.5	245	52
17	260	275	6.9	3.2	PH831_0070K202_0250 EZ302U	819	819	1136	175.9	1935/11	4000	4000	6500	3.5	0.44	1.5	245	49
17	339	359	9.0	2.5	PH831_0070K202_0250 EZ303U	838	838	1136	175.9	1935/11	4000	4000	6500	3.5	0.55	1.5	245	49
17	459	491	10	2.2	PH831_0070K202_0250 EZ401U	1392	1392	2917	175.9	1935/11	4000	4000	6500	3.5	1.1	1.5	245	51
17	704	770	16	1.4	PH831_0070K202_0250 EZ501U	1478	1478	2917	175.9	1935/11	4000	4000	6500	3.5	3.0	1.5	245	52
17	770	852	17	1.3	PH831_0070K202_0250 EZ402U	1478	1478	2917	175.9	1935/11	4000	4000	6500	3.5	1.8	1.5	245	52
17	259	273	8.9	3.3	PH831_0100K202_0175 EZ302U	813	813	1324	174.7	2795/16	3900	3900	5500	3.5	0.66	1.5	260	49
17	337	356	12	2.5	PH831_0100K202_0175 EZ303U	976	976	1324	174.7	2795/16	3900	3900	5500	3.5	0.77	1.5	260	49
17	455	488	16	1.9	PH831_0100K202_0175 EZ401U	1383	1383	2784	174.7	2795/16	3900	3900	5500	3.5	1.3	1.5	260	51
17	699	765	24	1.2	PH831_0100K202_0175 EZ501U	1392	1392	2784	174.7	2795/16	3900	3900	5500	3.5	3.3	1.5	260	52
17	765	846	26	1.1	PH831_0100K202_0175 EZ402U	1392	1392	2784	174.7	2795/16	3900	3900	5500	3.5	2.0	1.5	260	52
17	453	485	7.9	2.4	PH831_0050K302_0350 EZ401U	1375	1375	3646	173.7	4515/26	3800	3800	6000	4.0	1.2	2.0	245	56
17	695	760	12	1.6	PH831_0050K302_0350 EZ501U	1848	1848	3646	173.7	4515/26	3800	3800	6000	4.0	3.2	2.0	245	57
17	760	841	13	1.4	PH831_0050K302_0350 EZ402U	1848	1848	3646	173.7	4515/26	3800	3800	6000	4.0	1.9	2.0	245	57
18	240	254	6.3	3.8	PH831_0070K202_0230 EZ302U	755	755	1230	162.3	20769/128	4000	4000	6500	3.5	0.54	1.5	245	49
18	313	331	8.2	2.9	PH831_0070K202_0230 EZ303U	907	907	1230	162.3	20769/128	4000	4000	6500	3.5	0.65	1.5	245	49
18	423	453	10	2.4	PH831_0070K202_0230 EZ401U	1284	1284	2917	162.3	20769/128	4000	4000	6500	3.5	1.2	1.5	245	51
18	650	710	15	1.5	PH831_0070K202_0230 EZ501U	1478	1478	2917	162.3	20769/128	4000	4000	6500	3.5	3.2	1.5	245	52
18	710	786	17	1.4	PH831_0070K202_0230 EZ402U	1478	1478	2917	162.3	20769/128	4000	4000	6500	3.5	1.9	1.5	245	52
21	371	397	9.7	2.7	PH831_0070K202_0200 EZ401U	1126	1126	2917	142.3	7826/55	4000	4000	6500	3.5	1.1	1.5	245	51
21	570	623	15	1.8	PH831_0070K202_0200 EZ501U	1478	1478	2917	142.3	7826/55	4000	4000	6500	3.5	3.1	1.5	245	52
21	623	689	16	1.6	PH831_0070K202_0200 EZ402U	1478	1478	2917	142.3	7826/55	4000	4000	6500	3.5	1.8	1.5	245	52
21	914	1139	24	1.1	PH831_0070K202_0200 EZ404U	1478	1478	2917	142.3	7826/55	4000	4000	6500	3.5	3.2	1.5	245	54
21	980	1060	26	1.0	PH831_0070K202_0200 EZ502U	1478	1478	2917	142.3	7826/55	4000	4000	6500	3.5	5.4	1.5	245	53
21	980	1100	26	1.0	PH831_0070K202_0200 EZ701U	1478	1478	2917	142.3	7826/55	4000	4000	6500	3.5	8.7	1.5	245	55
22	364	389	7.5	3.0	PH831_0050K302_0280 EZ401U	1103	1103	3646	139.4	17845/128	3800	3800	6000	4.0	1.3	2.0	245	56
22	558	610	12	2.0	PH831_0050K302_0280 EZ501U	1848	1848	3646	139.4	17845/128	3800	3800	6000	4.0	3.3	2.0	245	57
22	610	675	13	1.8	PH831_0050K302_0280 EZ402U	1848	1848	3646	139.4	17845/128	3800	3800	6000	4.0	2.0	2.0	245	57
22	896	1116	18	1.2	PH831_0050K302_0280 EZ404U	1848	1848	3646	139.4	17845/128	3800	3800	6000	4.0	3.4	2.0	245	59
22	961	1039	20	1.1	PH831_0050K302_0280 EZ502U	1848	1848	3646	139.4	17845/128	3800	3800	6000	4.0	5.6	2.0	245	58
22	961	1078	20	1.1	PH831_0050K302_0280 EZ701U	1848	1848	3646	139.4	17845/128	3800	3800	6000	4.0	8.9	2.0	245	60
22	361	387	15	2.4	PH831_0100K202_0140 EZ401U	1096	1096	2784	138.5	14405/104	3900	3900	5500	3.5	1.5	1.5	260	51
22	555	606	23	1.5	PH831_0100K202_0140 EZ501U	1392	1392	2784	138.5	14405/104	3900	3900	5500	3.5	3.4	1.5	260	52
22	606	671	25	1.4	PH831_0100K202_0140 EZ402U	1392	1392	2784	138.5	14405/104	3900	3900	5500	3.5	2.2	1.5	260	52
25	181	191	7.8	3.8	PH831_0070K202_0175 EZ302U	569	569	927	122.3	3913/32	3900	3900	5500	3.5	0.68	1.5	245	49
25	236	249	10	2.9	PH831_0070K202_0175 EZ303U	683	683	927	122.3	3913/32	3900	3900	5500	3.5	0.79	1.5	245	49
25	319	342	9.3	3.1	PH831_0070K202_0175 EZ401U	968	968	2917	122.3	3913/32	3900	3900	5500	3.5	1.3	1.5	245	51
25	490	535	14	2.0	PH831_0070K202_0175 EZ501U	1478	1478	2917	122.3	3913/32	3900	3900	5500	3.5	3.3	1.5	245	52

n_{2N} [rpm]	M_{2N} [Nm]	$M_{2,0}$ [Nm]	a_{th}	S	Type	M_{2acc} [Nm]	M_{2accHT} [Nm]	M_{2NOT} [Nm]	i	i_{exakt}	n_{1maxDB} EL1,2 [rpm]	n_{1maxDB} EL3,4,5,6 [rpm]	n_{1maxZB} [rpm]	$\Delta\varphi_2$ [arcmin]	J_1 [kgcm²]	$\Delta\varphi_{2red}$ [arcmin]	C_2 [Nm/ arcmin]	m [kg]
PH831K (n_{1N} = 3000 min^{-1}, $M_{2acc,max}$ = 1850 Nm)																		
25	535	592	16	1.9	PH831_0070K202_0175 EZ402U	1478	1478	2917	122.3	3913/32	3900	3900	5500	3.5	2.0	1.5	245	52
25	786	979	23	1.3	PH831_0070K202_0175 EZ404U	1478	1478	2917	122.3	3913/32	3900	3900	5500	3.5	3.4	1.5	245	54
25	843	911	25	1.2	PH831_0070K202_0175 EZ502U	1478	1478	2917	122.3	3913/32	3900	3900	5500	3.5	5.6	1.5	245	53
25	843	945	25	1.2	PH831_0070K202_0175 EZ701U	1478	1478	2917	122.3	3913/32	3900	3900	5500	3.5	8.9	1.5	245	55
25	175	185	8.0	3.8	PH831_0070K202_0170 EZ302U	549	549	895	118.0	20769/176	4000	4000	6500	3.5	0.58	1.5	245	49
25	227	241	10	2.9	PH831_0070K202_0170 EZ303U	660	660	895	118.0	20769/176	4000	4000	6500	3.5	0.69	1.5	245	49
25	308	330	9.2	3.3	PH831_0070K202_0170 EZ401U	934	934	2917	118.0	20769/176	4000	4000	6500	3.5	1.2	1.5	245	51
25	473	516	14	2.1	PH831_0070K202_0170 EZ501U	1478	1478	2917	118.0	20769/176	4000	4000	6500	3.5	3.2	1.5	245	52
25	516	571	16	1.9	PH831_0070K202_0170 EZ402U	1478	1478	2917	118.0	20769/176	4000	4000	6500	3.5	1.9	1.5	245	52
25	758	945	23	1.3	PH831_0070K202_0170 EZ404U	1478	1478	2917	118.0	20769/176	4000	4000	6500	3.5	3.3	1.5	245	54
25	813	879	24	1.2	PH831_0070K202_0170 EZ502U	1478	1478	2917	118.0	20769/176	4000	4000	6500	3.5	5.5	1.5	245	53
25	813	912	24	1.2	PH831_0070K202_0170 EZ701U	1478	1478	2917	118.0	20769/176	4000	4000	6500	3.5	8.8	1.5	245	55
26	304	325	7.2	3.6	PH831_0050K302_0230 EZ401U	922	922	3358	116.5	2795/24	3800	3800	6000	4.0	1.4	2.0	245	56
26	466	510	11	2.4	PH831_0050K302_0230 EZ501U	1735	1735	3358	116.5	2795/24	3800	3800	6000	4.0	3.4	2.0	245	57
26	510	564	12	2.2	PH831_0050K302_0230 EZ402U	1735	1735	3358	116.5	2795/24	3800	3800	6000	4.0	2.1	2.0	245	57
26	748	933	18	1.5	PH831_0050K302_0230 EZ404U	1848	1848	3358	116.5	2795/24	3800	3800	6000	4.0	3.5	2.0	245	59
26	803	868	19	1.4	PH831_0050K302_0230 EZ502U	1848	1848	3358	116.5	2795/24	3800	3800	6000	4.0	5.7	2.0	245	58
26	803	900	19	1.4	PH831_0050K302_0230 EZ701U	1848	1848	3646	116.5	2795/24	3800	3800	6000	4.0	9.0	2.0	245	60
26	1052	1204	25	1.0	PH831_0050K302_0230 EZ503U	1848	1848	3358	116.5	2795/24	3800	3800	6000	4.0	8.1	2.0	245	60
26	171	181	11	3.8	PH831_0100K202_0115 EZ302U	538	538	875	115.5	6235/54	3500	3500	5000	3.5	0.98	1.5	260	49
26	223	235	14	2.9	PH831_0100K202_0115 EZ303U	645	645	875	115.5	6235/54	3500	3500	5000	3.5	1.1	1.5	260	49
26	301	323	14	2.8	PH831_0100K202_0115 EZ401U	914	914	2784	115.5	6235/54	3500	3500	5000	3.5	1.6	1.5	260	51
26	462	505	22	1.8	PH831_0100K202_0115 EZ501U	1392	1392	2784	115.5	6235/54	3500	3500	5000	3.5	3.6	1.5	260	52
26	505	559	24	1.7	PH831_0100K202_0115 EZ402U	1392	1392	2784	115.5	6235/54	3500	3500	5000	3.5	2.3	1.5	260	52
26	742	925	35	1.1	PH831_0100K202_0115 EZ404U	1392	1392	2784	115.5	6235/54	3500	3500	5000	3.5	3.7	1.5	260	54
26	796	860	37	1.1	PH831_0100K202_0115 EZ502U	1392	1392	2784	115.5	6235/54	3500	3500	5000	3.5	5.9	1.5	260	53
26	796	892	37	1.1	PH831_0100K202_0115 EZ701U	1392	1392	2784	115.5	6235/54	3500	3500	5000	3.5	9.2	1.5	260	55
31	253	271	9.4	3.7	PH831_0070K202_0140 EZ401U	767	767	2917	96.96	20167/208	3900	3900	5500	3.5	1.5	1.5	245	51
31	388	424	14	2.4	PH831_0070K202_0140 EZ501U	1445	1445	2917	96.96	20167/208	3900	3900	5500	3.5	3.4	1.5	245	52
31	424	469	16	2.2	PH831_0070K202_0140 EZ402U	1445	1445	2917	96.96	20167/208	3900	3900	5500	3.5	2.2	1.5	245	52
31	623	776	23	1.5	PH831_0070K202_0140 EZ404U	1478	1478	2917	96.96	20167/208	3900	3900	5500	3.5	3.5	1.5	245	54
31	668	722	25	1.4	PH831_0070K202_0140 EZ502U	1478	1478	2917	96.96	20167/208	3900	3900	5500	3.5	5.7	1.5	245	53
31	668	749	25	1.4	PH831_0070K202_0140 EZ701U	1478	1478	2917	96.96	20167/208	3900	3900	5500	3.5	9.0	1.5	245	55
31	876	1002	32	1.1	PH831_0070K202_0140 EZ503U	1478	1478	2917	96.96	20167/208	3900	3900	5500	3.5	8.1	1.5	245	55
33	240	257	13	3.5	PH831_0100K202_0092 EZ401U	727	727	2784	91.90	11395/124	3500	3500	5000	3.5	1.9	1.5	260	51
33	368	402	21	2.3	PH831_0100K202_0092 EZ501U	1369	1369	2784	91.90	11395/124	3500	3500	5000	3.5	3.9	1.5	260	52
33	402	445	22	2.1	PH831_0100K202_0092 EZ402U	1369	1369	2784	91.90	11395/124	3500	3500	5000	3.5	2.6	1.5	260	52
33	590	736	33	1.4	PH831_0100K202_0092 EZ404U	1392	1392	2784	91.90	11395/124	3500	3500	5000	3.5	3.9	1.5	260	54
33	633	685	35	1.3	PH831_0100K202_0092 EZ502U	1392	1392	2784	91.90	11395/124	3500	3500	5000	3.5	6.2	1.5	260	53
33	633	710	35	1.3	PH831_0100K202_0092 EZ701U	1392	1392	2784	91.90	11395/124	3500	3500	5000	3.5	9.5	1.5	260	55
33	830	950	46	1.0	PH831_0100K202_0092 EZ503U	1392	1392	2784	91.90	11395/124	3500	3500	5000	3.5	8.5	1.5	260	55
34	132	139	9.8	3.8	PH831_0070K202_0125 EZ302U	414	414	674	88.94	3913/44	3900	3900	5500	3.5	0.75	1.5	245	49
34	171	181	13	2.9	PH831_0070K202_0125 EZ303U	497	497	674	88.94	3913/44	3900	3900	5500	3.5	0.86	1.5	245	49
34	232	248	9.4	3.9	PH831_0070K202_0125 EZ401U	704	704	2696	88.94	3913/44	3900	3900	5500	3.5	1.4	1.5	245	51
34	356	389	15	2.6	PH831_0070K202_0125 EZ501U	1325	1325	2696	88.94	3913/44	3900	3900	5500	3.5	3.4	1.5	245	52
34	389	431	16	2.3	PH831_0070K202_0125 EZ402U	1325	1325	2696	88.94	3913/44	3900	3900	5500	3.5	2.1	1.5	245	52
34	571	712	23	1.6	PH831_0070K202_0125 EZ404U	1478	1478	2696	88.94	3913/44	3900	3900	5500	3.5	3.4	1.5	245	54
34	613	663	25	1.5	PH831_0070K202_0125 EZ502U	1478	1478	2696	88.94	3913/44	3900	3900	5500	3.5	5.7	1.5	245	53
34	613	687	25	1.5	PH831_0070K202_0125 EZ701U	1478	1478	2917	88.94	3913/44	3900	3900	5500	3.5	9.0	1.5	245	55
34	803	919	33	1.1	PH831_0070K202_0125 EZ503U	1478	1478	2696	88.94	3913/44	3900	3900	5500	3.5	8.0	1.5	245	55
35	225	242	6.6	4.9	PH831_0050K302_0175 EZ401U	684	684	2621	86.47	7955/92	3500	3500	5000	4.0	1.7	2.0	245	56
35	346	378	10	3.2	PH831_0050K302_0175 EZ501U	1288	1288	2621	86.47	7955/92	3500	3500	5000	4.0	3.7	2.0	245	57
35	378	419	11	2.9	PH831_0050K302_0175 EZ402U	1288	1288	2621	86.47	7955/92	3500	3500	5000	4.0	2.4	2.0	245	57
35	556	692	16	2.0	PH831_0050K302_0175 EZ404U	1848	1848	2621	86.47	7955/92	3500	3500	5000	4.0	3.8	2.0	245	59
35	596	644	18	1.8	PH831_0050K302_0175 EZ502U	1848	1848	2621	86.47	7955/92	3500	3500	5000	4.0	6.0	2.0	245	58
35	596	668	18	1.8	PH831_0050K302_0175 EZ701U	1610	1610	3646	86.47	7955/92	3500	3500	5000	4.0	9.3	2.0	245	60
35	781	894	23	1.4	PH831_0050K302_0175 EZ503U	1848	1848	2621	86.47	7955/92	3500	3500	5000	4.0	8.4	2.0	245	60
35	966	1159	28	1.1	PH831_0050K302_0175 EZ702U	1848	1848	3646	86.47	7955/92	3500	3500	5000	4.0	15	2.0	245	62
35	1087	1288	32	1.0	PH831_0050K302_0175 EZ505U	1848	1848	3646	86.47	7955/92	3500	3500	5000	4.0	13	2.0	245	63
36	162	171	17	2.9	PH831_0100K202_0084 EZ303U	469	469	636	83.97	24940/297	3500	3500	5000	3.5	1.2	1.5	260	49
36	219	235	13	3.9	PH831_0100K202_0084 EZ401U	665	665	2546	83.97	24940/297	3500	3500	5000	3.5	1.8	1.5	260	51
36	336	368	20	2.5	PH831_0100K202_0084 EZ501U	1251	1251	2546	83.97	24940/297	3500	3500	5000	3.5	3.7	1.5	260	52
36	368	407	22	2.3	PH831_0100K202_0084 EZ402U	1251	1251	2546	83.97	24940/297	3500	3500	5000	3.5	2.5	1.5	260	52
36	540	672	32	1.6	PH831_0100K202_0084 EZ404U	1392	1392	2546	83.97	24940/297	3500	3500	5000	3.5	3.8	1.5	260	54

n_{2N} [rpm]	M_{2N} [Nm]	$M_{2,0}$ [Nm]	a_{th}	S	Type	M_{2acc} [Nm]	M_{2accHT} [Nm]	M_{2NOT} [Nm]	i	i_{exakt}	n_{1maxDB} EL1,2 [rpm]	n_{1maxDB} EL3,4,5,6 [rpm]	n_{1maxZB} [rpm]	$\Delta\varphi_2$ [arcmin]	J_1 [kgcm²]	$\Delta\varphi_{2red}$ [arcmin]	C_2 [Nm/ arcmin]	m [kg]
PH831K (n_{1N} = 3000 min^{-1}, $M_{2acc,max}$ = 1850 Nm)																		
36	579	626	35	1.5	PH831_0100K202_0084 EZ502U	1392	1392	2546	83.97	24940/297	3500	3500	5000	3.5	6.0	1.5	260	53
36	579	649	35	1.5	PH831_0100K202_0084 EZ701U	1392	1392	2784	83.97	24940/297	3500	3500	5000	3.5	9.3	1.5	260	55
36	758	868	45	1.1	PH831_0100K202_0084 EZ503U	1392	1392	2546	83.97	24940/297	3500	3500	5000	3.5	8.4	1.5	260	55
37	120	126	11	3.8	PH831_0070K202_0115 EZ302U	376	376	613	80.82	8729/108	3500	3500	5000	3.5	1.0	1.5	245	49
37	156	165	14	2.9	PH831_0070K202_0115 EZ303U	452	452	613	80.82	8729/108	3500	3500	5000	3.5	1.1	1.5	245	49
37	211	226	9.5	4.2	PH831_0070K202_0115 EZ401U	640	640	2450	80.82	8729/108	3500	3500	5000	3.5	1.7	1.5	245	51
37	324	354	15	2.7	PH831_0070K202_0115 EZ501U	1204	1204	2450	80.82	8729/108	3500	3500	5000	3.5	3.6	1.5	245	52
37	354	391	16	2.5	PH831_0070K202_0115 EZ402U	1204	1204	2450	80.82	8729/108	3500	3500	5000	3.5	2.4	1.5	245	52
37	519	647	23	1.7	PH831_0070K202_0115 EZ404U	1478	1478	2450	80.82	8729/108	3500	3500	5000	3.5	3.7	1.5	245	54
37	557	602	25	1.6	PH831_0070K202_0115 EZ502U	1478	1478	2450	80.82	8729/108	3500	3500	5000	3.5	5.9	1.5	245	53
37	557	625	25	1.6	PH831_0070K202_0115 EZ701U	1478	1478	2917	80.82	8729/108	3500	3500	5000	3.5	9.2	1.5	245	55
37	730	835	33	1.2	PH831_0070K202_0115 EZ503U	1478	1478	2450	80.82	8729/108	3500	3500	5000	3.5	8.3	1.5	245	55
43	184	197	9.6	4.6	PH831_0070K202_0100 EZ401U	558	558	2138	70.51	20167/286	3900	3900	5500	3.5	1.6	1.5	245	51
43	282	309	15	3.0	PH831_0070K202_0100 EZ501U	1051	1051	2138	70.51	20167/286	3900	3900	5500	3.5	3.6	1.5	245	52
43	309	341	16	2.7	PH831_0070K202_0100 EZ402U	1051	1051	2138	70.51	20167/286	3900	3900	5500	3.5	2.3	1.5	245	52
43	453	565	24	1.9	PH831_0070K202_0100 EZ404U	1478	1478	2138	70.51	20167/286	3900	3900	5500	3.5	3.6	1.5	245	54
43	486	525	25	1.7	PH831_0070K202_0100 EZ502U	1478	1478	2138	70.51	20167/286	3900	3900	5500	3.5	5.9	1.5	245	53
43	486	545	25	1.7	PH831_0070K202_0100 EZ701U	1313	1313	2917	70.51	20167/286	3900	3900	5500	3.5	9.2	1.5	245	55
43	637	729	33	1.3	PH831_0070K202_0100 EZ503U	1478	1478	2138	70.51	20167/286	3900	3900	5500	3.5	8.2	1.5	245	55
43	788	946	41	1.1	PH831_0070K202_0100 EZ702U	1478	1478	2917	70.51	20167/286	3900	3900	5500	3.5	14	1.5	245	57
43	279	305	9.7	3.9	PH831_0050K302_0140 EZ501U	1038	1038	2113	69.68	7525/108	3500	3500	5000	4.0	4.0	2.0	245	57
43	305	337	11	3.6	PH831_0050K302_0140 EZ402U	1038	1038	2113	69.68	7525/108	3500	3500	5000	4.0	2.7	2.0	245	57
43	448	558	16	2.5	PH831_0050K302_0140 EZ404U	1558	1558	2113	69.68	7525/108	3500	3500	5000	4.0	4.1	2.0	245	59
43	480	519	17	2.3	PH831_0050K302_0140 EZ502U	1558	1558	2113	69.68	7525/108	3500	3500	5000	4.0	6.3	2.0	245	58
43	480	539	17	2.3	PH831_0050K302_0140 EZ701U	1298	1298	3646	69.68	7525/108	3500	3500	5000	4.0	9.6	2.0	245	60
43	629	720	22	1.7	PH831_0050K302_0140 EZ503U	1558	1558	2113	69.68	7525/108	3500	3500	5000	4.0	8.7	2.0	245	60
43	779	934	27	1.4	PH831_0050K302_0140 EZ702U	1848	1848	3646	69.68	7525/108	3500	3500	5000	4.0	15	2.0	245	62
43	876	1038	30	1.3	PH831_0050K302_0140 EZ505U	1848	1848	3646	69.68	7525/108	3500	3500	5000	4.0	13	2.0	245	63
43	1071	1350	37	1.0	PH831_0050K302_0140 EZ703U	1848	1848	3646	69.68	7525/108	3500	3500	5000	4.0	23	2.0	245	64
45	174	187	12	4.9	PH831_0100K202_0067 EZ401U	529	529	2027	66.83	22790/341	3500	3500	5000	3.5	2.1	1.5	260	51
45	268	292	19	3.2	PH831_0100K202_0067 EZ501U	996	996	2027	66.83	22790/341	3500	3500	5000	3.5	4.1	1.5	260	52
45	292	324	21	2.9	PH831_0100K202_0067 EZ402U	996	996	2027	66.83	22790/341	3500	3500	5000	3.5	2.8	1.5	260	52
45	429	535	30	2.0	PH831_0100K202_0067 EZ404U	1392	1392	2027	66.83	22790/341	3500	3500	5000	3.5	4.2	1.5	260	54
45	461	498	33	1.8	PH831_0100K202_0067 EZ502U	1392	1392	2027	66.83	22790/341	3500	3500	5000	3.5	6.4	1.5	260	53
45	461	517	33	1.8	PH831_0100K202_0067 EZ701U	1245	1245	2784	66.83	22790/341	3500	3500	5000	3.5	9.7	1.5	260	55
45	604	691	43	1.4	PH831_0100K202_0067 EZ503U	1392	1392	2027	66.83	22790/341	3500	3500	5000	3.5	8.8	1.5	260	55
45	747	896	53	1.1	PH831_0100K202_0067 EZ702U	1392	1392	2784	66.83	22790/341	3500	3500	5000	3.5	15	1.5	260	57
45	840	996	59	1.0	PH831_0100K202_0067 EZ505U	1392	1392	2784	66.83	22790/341	3500	3500	5000	3.5	13	1.5	260	58
47	168	180	9.7	4.9	PH831_0070K202_0092 EZ401U	509	509	1951	64.33	15953/248	3500	3500	5000	3.5	2.0	1.5	245	51
47	258	282	15	3.2	PH831_0070K202_0092 EZ501U	958	958	1951	64.33	15953/248	3500	3500	5000	3.5	3.9	1.5	245	52
47	282	312	16	2.9	PH831_0070K202_0092 EZ402U	958	958	1951	64.33	15953/248	3500	3500	5000	3.5	2.7	1.5	245	52
47	413	515	24	2.0	PH831_0070K202_0092 EZ404U	1438	1438	1951	64.33	15953/248	3500	3500	5000	3.5	4.0	1.5	245	54
47	443	479	26	1.8	PH831_0070K202_0092 EZ502U	1438	1438	1951	64.33	15953/248	3500	3500	5000	3.5	6.2	1.5	245	53
47	443	497	26	1.8	PH831_0070K202_0092 EZ701U	1198	1198	2917	64.33	15953/248	3500	3500	5000	3.5	9.5	1.5	245	55
47	581	665	34	1.4	PH831_0070K202_0092 EZ503U	1438	1438	1951	64.33	15953/248	3500	3500	5000	3.5	8.6	1.5	245	55
47	719	863	42	1.1	PH831_0070K202_0092 EZ702U	1478	1478	2917	64.33	15953/248	3500	3500	5000	3.5	15	1.5	245	57
47	809	958	47	1.0	PH831_0070K202_0092 EZ505U	1478	1478	2917	64.33	15953/248	3500	3500	5000	3.5	13	1.5	245	58
50	240	263	18	3.5	PH831_0100K202_0060 EZ501U	894	894	1819	60.00	60/1	3000	3000	4500	3.5	4.7	1.5	260	52
50	263	291	20	3.2	PH831_0100K202_0060 EZ402U	894	894	1819	60.00	60/1	3000	3000	4500	3.5	3.4	1.5	260	52
50	386	480	30	2.2	PH831_0100K202_0060 EZ404U	1341	1341	1819	60.00	60/1	3000	3000	4500	3.5	4.8	1.5	260	54
50	413	447	32	2.1	PH831_0100K202_0060 EZ502U	1341	1341	1819	60.00	60/1	3000	3000	4500	3.5	7.0	1.5	260	53
50	413	464	32	2.1	PH831_0100K202_0060 EZ701U	1117	1117	2784	60.00	60/1	3000	3000	4500	3.5	10	1.5	260	55
50	542	620	42	1.6	PH831_0100K202_0060 EZ503U	1341	1341	1819	60.00	60/1	3000	3000	4500	3.5	9.4	1.5	260	55
50	670	805	51	1.3	PH831_0100K202_0060 EZ702U	1392	1392	2784	60.00	60/1	3000	3000	4500	3.5	16	1.5	260	57
50	754	894	58	1.1	PH831_0100K202_0060 EZ505U	1392	1392	2784	60.00	60/1	3000	3000	4500	3.5	14	1.5	260	58
51	113	120	17	2.9	PH831_0070K202_0084 EZ303U	328	328	446	58.78	17458/297	3500	3500	5000	3.5	1.3	1.5	245	49
51	235	257	15	3.4	PH831_0070K202_0084 EZ501U	876	876	1782	58.78	17458/297	3500	3500	5000	3.5	3.8	1.5	245	52
51	257	285	16	3.1	PH831_0070K202_0084 EZ402U	876	876	1782	58.78	17458/297	3500	3500	5000	3.5	2.5	1.5	245	52
51	378	471	24	2.1	PH831_0070K202_0084 EZ404U	1314	1314	1782	58.78	17458/297	3500	3500	5000	3.5	3.9	1.5	245	54
51	405	438	26	2.0	PH831_0070K202_0084 EZ502U	1314	1314	1782	58.78	17458/297	3500	3500	5000	3.5	6.1	1.5	245	53
51	405	454	26	2.0	PH831_0070K202_0084 EZ701U	1095	1095	2917	58.78	17458/297	3500	3500	5000	3.5	9.4	1.5	245	55
51	531	608	34	1.5	PH831_0070K202_0084 EZ503U	1314	1314	1782	58.78	17458/297	3500	3500	5000	3.5	8.5	1.5	245	55
51	657	788	42	1.2	PH831_0070K202_0084 EZ702U	1478	1478	2917	58.78	17458/297	3500	3500	5000	3.5	15	1.5	245	57
51	739	876	47	1.1	PH831_0070K202_0084 EZ505U	1478	1478	2917	58.78	17458/297	3500	3500	5000	3.5	13	1.5	245	58

n_{2N} [rpm]	M_{2N} [Nm]	$M_{2,0}$ [Nm]	a_{th}	S	Type	M_{2acc} [Nm]	M_{2accHT} [Nm]	M_{2NOT} [Nm]	i	i_{exakt}	n_{1maxDB} EL1,2 [rpm]	n_{1maxDB} EL3,4,5,6 [rpm]	n_{1maxZB} [rpm]	$\Delta\varphi_2$ [arcmin]	J_1 [kgcm²]	$\Delta\varphi_{2red}$ [arcmin]	C_2 [Nm/ arcmin]	m [kg]
PH831K (n_{1N} = 3000 min^{-1}, $M_{2acc,max}$ = 1850 Nm)																		
52	232	254	9.2	4.7	PH831_0050K302_0115 EZ501U	865	865	1760	58.05	1161/20	3200	3200	4500	4.0	4.4	2.0	245	57
52	254	281	10	4.3	PH831_0050K302_0115 EZ402U	865	865	1760	58.05	1161/20	3200	3200	4500	4.0	3.1	2.0	245	57
52	373	465	15	2.9	PH831_0050K302_0115 EZ404U	1298	1298	1760	58.05	1161/20	3200	3200	4500	4.0	4.5	2.0	245	59
52	400	432	16	2.8	PH831_0050K302_0115 EZ502U	1298	1298	1760	58.05	1161/20	3200	3200	4500	4.0	6.7	2.0	245	58
52	400	449	16	2.8	PH831_0050K302_0115 EZ701U	1081	1081	3646	58.05	1161/20	3200	3200	4500	4.0	10	2.0	245	60
52	524	600	21	2.1	PH831_0050K302_0115 EZ503U	1298	1298	1760	58.05	1161/20	3200	3200	4500	4.0	9.1	2.0	245	60
52	649	778	26	1.7	PH831_0050K302_0115 EZ702U	1848	1848	3646	58.05	1161/20	3200	3200	4500	4.0	15	2.0	245	62
52	730	865	29	1.5	PH831_0050K302_0115 EZ505U	1848	1848	3646	58.05	1161/20	3200	3200	4500	4.0	14	2.0	245	63
52	892	1124	35	1.2	PH831_0050K302_0115 EZ703U	1848	1848	3646	58.05	1161/20	3200	3200	4500	4.0	23	2.0	245	64
58	357	400	31	2.4	PH831_0100K202_0052 EZ701U	964	964	2784	51.77	21070/407	3000	3000	4500	3.5	10	1.5	260	55
58	578	694	50	1.5	PH831_0100K202_0052 EZ702U	1392	1392	2784	51.77	21070/407	3000	3000	4500	3.5	16	1.5	260	57
58	651	771	56	1.3	PH831_0100K202_0052 EZ505U	1392	1392	2784	51.77	21070/407	3000	3000	4500	3.5	14	1.5	260	58
58	795	1003	68	1.1	PH831_0100K202_0052 EZ703U	1392	1392	2784	51.77	21070/407	3000	3000	4500	3.5	23	1.5	260	59
60	343	385	26	2.2	PH831_0070K202_0071 EZ701U	928	928	2917	49.83	14749/296	3000	3000	4500	3.5	10	1.5	245	55
60	557	668	42	1.4	PH831_0070K202_0071 EZ702U	1421	1421	2917	49.83	14749/296	3000	3000	4500	3.5	15	1.5	245	57
60	626	742	48	1.2	PH831_0070K202_0071 EZ505U	1421	1421	2917	49.83	14749/296	3000	3000	4500	3.5	14	1.5	245	58
64	187	205	15	3.9	PH831_0070K202_0067 EZ501U	697	697	1419	46.78	15953/341	3500	3500	5000	3.5	4.2	1.5	245	52
64	205	227	17	3.6	PH831_0070K202_0067 EZ402U	697	697	1419	46.78	15953/341	3500	3500	5000	3.5	2.9	1.5	245	52
64	301	375	25	2.4	PH831_0070K202_0067 EZ404U	1046	1046	1419	46.78	15953/341	3500	3500	5000	3.5	4.3	1.5	245	54
64	322	349	26	2.3	PH831_0070K202_0067 EZ502U	1046	1046	1419	46.78	15953/341	3500	3500	5000	3.5	6.5	1.5	245	53
64	322	362	26	2.3	PH831_0070K202_0067 EZ701U	871	871	2917	46.78	15953/341	3500	3500	5000	3.5	9.8	1.5	245	55
64	423	484	35	1.7	PH831_0070K202_0067 EZ503U	1046	1046	1419	46.78	15953/341	3500	3500	5000	3.5	8.9	1.5	245	55
64	523	627	43	1.4	PH831_0070K202_0067 EZ702U	1391	1391	2917	46.78	15953/341	3500	3500	5000	3.5	15	1.5	245	57
64	588	697	48	1.3	PH831_0070K202_0067 EZ505U	1391	1391	2917	46.78	15953/341	3500	3500	5000	3.5	13	1.5	245	58
64	719	906	59	1.0	PH831_0070K202_0067 EZ703U	1391	1391	2917	46.78	15953/341	3500	3500	5000	3.5	23	1.5	245	59
65	319	358	16	3.2	PH831_0050K302_0093 EZ701U	863	863	3512	46.34	5375/116	3200	3200	4500	4.0	11	2.0	245	60
65	518	621	26	2.0	PH831_0050K302_0093 EZ702U	1769	1769	3512	46.34	5375/116	3200	3200	4500	4.0	16	2.0	245	62
65	582	690	29	1.8	PH831_0050K302_0093 EZ505U	1848	1848	3512	46.34	5375/116	3200	3200	4500	4.0	14	2.0	245	63
65	712	897	36	1.4	PH831_0050K302_0093 EZ703U	1848	1848	3512	46.34	5375/116	3200	3200	4500	4.0	24	2.0	245	64
71	168	184	15	4.2	PH831_0070K202_0060 EZ501U	626	626	1273	42.00	42/1	3000	3000	4500	3.5	4.8	1.5	245	52
71	184	203	17	3.9	PH831_0070K202_0060 EZ402U	626	626	1273	42.00	42/1	3000	3000	4500	3.5	3.6	1.5	245	52
71	270	336	25	2.6	PH831_0070K202_0060 EZ404U	939	939	1273	42.00	42/1	3000	3000	4500	3.5	4.9	1.5	245	54
71	289	313	27	2.5	PH831_0070K202_0060 EZ502U	939	939	1273	42.00	42/1	3000	3000	4500	3.5	7.1	1.5	245	53
71	289	325	27	2.5	PH831_0070K202_0060 EZ701U	782	782	2917	42.00	42/1	3000	3000	4500	3.5	10	1.5	245	55
71	379	434	35	1.9	PH831_0070K202_0060 EZ503U	939	939	1273	42.00	42/1	3000	3000	4500	3.5	9.5	1.5	245	55
71	469	563	43	1.5	PH831_0070K202_0060 EZ702U	1342	1342	2917	42.00	42/1	3000	3000	4500	3.5	16	1.5	245	57
71	528	626	48	1.3	PH831_0070K202_0060 EZ505U	1342	1342	2917	42.00	42/1	3000	3000	4500	3.5	14	1.5	245	58
71	645	813	59	1.1	PH831_0070K202_0060 EZ703U	1342	1342	2917	42.00	42/1	3000	3000	4500	3.5	24	1.5	245	59
75	276	309	29	3.1	PH831_0100K202_0040 EZ701U	745	745	2784	40.00	40/1	3000	3000	4500	3.5	11	1.5	260	55
75	447	536	46	1.9	PH831_0100K202_0040 EZ702U	1392	1392	2784	40.00	40/1	3000	3000	4500	3.5	16	1.5	260	57
75	503	596	52	1.7	PH831_0100K202_0040 EZ505U	1392	1392	2784	40.00	40/1	3000	3000	4500	3.5	15	1.5	260	58
75	615	775	64	1.4	PH831_0100K202_0040 EZ703U	1392	1392	2784	40.00	40/1	3000	3000	4500	3.5	24	1.5	260	59
81	255	286	16	3.7	PH831_0050K302_0074 EZ701U	688	688	2801	36.96	2365/64	2700	2700	4000	4.0	11	2.0	245	60
81	413	496	27	2.3	PH831_0050K302_0074 EZ702U	1411	1411	2801	36.96	2365/64	2700	2700	4000	4.0	17	2.0	245	62
81	465	551	30	2.1	PH831_0050K302_0074 EZ505U	1800	1800	2801	36.96	2365/64	2700	2700	4000	4.0	15	2.0	245	63
81	568	716	37	1.7	PH831_0050K302_0074 EZ703U	1800	1800	2801	36.96	2365/64	2700	2700	4000	4.0	25	2.0	245	64
83	250	280	27	2.7	PH831_0070K202_0052 EZ701U	675	675	2746	36.24	14749/407	3000	3000	4500	3.5	10	1.5	245	55
83	405	486	44	1.7	PH831_0070K202_0052 EZ702U	1278	1278	2746	36.24	14749/407	3000	3000	4500	3.5	16	1.5	245	57
83	456	540	49	1.5	PH831_0070K202_0052 EZ505U	1278	1278	2746	36.24	14749/407	3000	3000	4500	3.5	14	1.5	245	58
83	557	702	60	1.2	PH831_0070K202_0052 EZ703U	1278	1278	2746	36.24	14749/407	3000	3000	4500	3.5	24	1.5	245	59
98	134	148	17	4.8	PH831_0070K202_0044 EZ402U	455	455	926	30.55	336/11	3000	3000	4500	3.5	4.2	1.5	245	52
98	196	245	25	3.3	PH831_0070K202_0044 EZ404U	683	683	926	30.55	336/11	3000	3000	4500	3.5	5.5	1.5	245	54
98	211	228	27	3.0	PH831_0070K202_0044 EZ502U	683	683	926	30.55	336/11	3000	3000	4500	3.5	7.8	1.5	245	53
98	211	236	27	3.0	PH831_0070K202_0044 EZ701U	569	569	2315	30.55	336/11	3000	3000	4500	3.5	11	1.5	245	55
98	276	316	36	2.3	PH831_0070K202_0044 EZ503U	683	683	926	30.55	336/11	3000	3000	4500	3.5	10	1.5	245	55
98	341	410	44	1.9	PH831_0070K202_0044 EZ702U	1166	1166	2315	30.55	336/11	3000	3000	4500	3.5	16	1.5	245	57
98	384	455	50	1.7	PH831_0070K202_0044 EZ505U	1207	1207	2315	30.55	336/11	3000	3000	4500	3.5	15	1.5	245	58
98	469	592	61	1.4	PH831_0070K202_0044 EZ703U	1207	1207	2315	30.55	336/11	3000	3000	4500	3.5	24	1.5	245	59
100	207	232	17	4.3	PH831_0050K302_0060 EZ701U	559	559	2273	30.00	30/1	2700	2700	4000	4.0	12	2.0	245	60
100	335	402	27	2.7	PH831_0050K302_0060 EZ702U	1145	1145	2273	30.00	30/1	2700	2700	4000	4.0	18	2.0	245	62
100	377	447	30	2.4	PH831_0050K302_0060 EZ505U	1676	1676	2273	30.00	30/1	2700	2700	4000	4.0	16	2.0	245	63
100	461	581	37	1.9	PH831_0050K302_0060 EZ703U	1676	1676	2273	30.00	30/1	2700	2700	4000	4.0	26	2.0	245	64
100	595	844	48	1.5	PH831_0050K302_0060 EZ705U	1679	1679	3646	30.00	30/1	2700	2700	4000	4.0	38	2.0	245	70
107	193	216	27	3.2	PH831_0070K202_0040 EZ701U	521	521	2122	28.00	28/1	3000	3000	4500	3.5	11	1.5	245	55

n_{2N} [rpm]	M_{2N} [Nm]	$M_{2,0}$ [Nm]	a_{th}	S	Type	M_{2acc} [Nm]	M_{2accHT} [Nm]	M_{2NOT} [Nm]	i	i_{exakt}	n_{1maxDB} EL1,2 [rpm]	n_{1maxDB} EL3,4,5,6 [rpm]	n_{1maxZB} [rpm]	$\Delta\varphi_2$ [arcmin]	J_1 [kgcm²]	$\Delta\varphi_{2red}$ [arcmin]	C_2 [Nm/ arcmin]	m [kg]
PH831K (n_{1N} = 3000 min^{-1}, $M_{2acc,max}$ = 1850 Nm)																		
107	313	375	45	2.0	PH831_0070K202_0040 EZ702U	1069	1069	2122	28.00	28/1	3000	3000	4500	3.5	17	1.5	245	57
107	352	417	50	1.8	PH831_0070K202_0040 EZ505U	1173	1173	2122	28.00	28/1	3000	3000	4500	3.5	15	1.5	245	58
107	430	542	61	1.4	PH831_0070K202_0040 EZ703U	1173	1173	2122	28.00	28/1	3000	3000	4500	3.5	25	1.5	245	59
112	185	208	17	4.6	PH831_0050K302_0054 EZ701U	501	501	2037	26.88	215/8	2700	2700	4000	4.0	12	2.0	245	60
112	300	360	27	2.9	PH831_0050K302_0054 EZ702U	1026	1026	2037	26.88	215/8	2700	2700	4000	4.0	17	2.0	245	62
112	338	400	31	2.5	PH831_0050K302_0054 EZ505U	1502	1502	2037	26.88	215/8	2700	2700	4000	4.0	16	2.0	245	63
112	413	521	38	2.1	PH831_0050K302_0054 EZ703U	1502	1502	2037	26.88	215/8	2700	2700	4000	4.0	25	2.0	245	64
150	223	268	28	3.5	PH831_0050K302_0040 EZ702U	764	764	1516	20.00	20/1	2700	2700	4000	4.0	20	2.0	245	62
150	251	298	31	3.1	PH831_0050K302_0040 EZ505U	1117	1117	1516	20.00	20/1	2700	2700	4000	4.0	18	2.0	245	63
150	307	387	38	2.5	PH831_0050K302_0040 EZ703U	1117	1117	1516	20.00	20/1	2700	2700	4000	4.0	28	2.0	245	64
150	397	562	50	2.0	PH831_0050K302_0040 EZ705U	1467	1467	3646	20.00	20/1	2700	2700	4000	4.0	40	2.0	245	70
188	179	215	28	3.5	PH831_0040K302_0040 EZ702U	611	611	1212	16.00	16/1	2700	2700	4000	4.0	20	2.0	185	62
188	201	238	31	3.1	PH831_0040K302_0040 EZ505U	894	894	1212	16.00	16/1	2700	2700	4000	4.0	19	2.0	185	63
188	246	310	38	2.5	PH831_0040K302_0040 EZ703U	894	894	1212	16.00	16/1	2700	2700	4000	4.0	28	2.0	185	64
188	317	450	50	2.0	PH831_0040K302_0040 EZ705U	1174	1174	2917	16.00	16/1	2700	2700	4000	4.0	41	2.0	185	70
PH831K (n_{1N} = 4500 min^{-1}, $M_{2acc,max}$ = 1850 Nm)																		
39	1030	1659	24	1.1	PH831_0050K302_0230 EZ505U	1848	1848	3646	116.5	2795/24	3800	3800	6000	4.0	13	2.0	245	63
49	813	1309	45	1.0	PH831_0100K202_0092 EZ505U	1392	1392	2784	91.90	11395/124	3500	3500	5000	3.5	13	1.5	260	58
51	787	1267	37	1.0	PH831_0070K202_0125 EZ505U	1478	1478	2917	88.94	3913/44	3900	3900	5500	3.5	13	1.5	245	58
52	765	1232	23	1.4	PH831_0050K302_0175 EZ505U	1848	1848	3646	86.47	7955/92	3500	3500	5000	4.0	13	2.0	245	63
52	974	1610	29	1.1	PH831_0050K302_0175 EZ703U	1848	1848	3646	86.47	7955/92	3500	3500	5000	4.0	22	2.0	245	64
54	743	1196	44	1.1	PH831_0100K202_0084 EZ505U	1392	1392	2784	83.97	24940/297	3500	3500	5000	3.5	13	1.5	260	58
56	715	1152	37	1.1	PH831_0070K202_0115 EZ505U	1478	1478	2917	80.82	8729/108	3500	3500	5000	3.5	13	1.5	245	58
64	624	1005	37	1.2	PH831_0070K202_0100 EZ505U	1478	1478	2917	70.51	20167/286	3900	3900	5500	3.5	13	1.5	245	58
65	616	993	23	1.7	PH831_0050K302_0140 EZ505U	1848	1848	3646	69.68	7525/108	3500	3500	5000	4.0	13	2.0	245	63
65	785	1298	29	1.3	PH831_0050K302_0140 EZ703U	1848	1848	3646	69.68	7525/108	3500	3500	5000	4.0	23	2.0	245	64
67	591	952	42	1.4	PH831_0100K202_0067 EZ505U	1392	1392	2784	66.83	22790/341	3500	3500	5000	3.5	13	1.5	260	58
67	753	1245	53	1.1	PH831_0100K202_0067 EZ703U	1392	1392	2784	66.83	22790/341	3500	3500	5000	3.5	23	1.5	260	59
70	569	917	38	1.3	PH831_0070K202_0092 EZ505U	1478	1478	2917	64.33	15953/248	3500	3500	5000	3.5	13	1.5	245	58
75	531	855	41	1.6	PH831_0100K202_0060 EZ505U	1392	1392	2784	60.00	60/1	3000	3000	4500	3.5	14	1.5	260	58
75	676	1117	52	1.3	PH831_0100K202_0060 EZ703U	1392	1392	2784	60.00	60/1	3000	3000	4500	3.5	23	1.5	260	59
77	520	837	38	1.3	PH831_0070K202_0084 EZ505U	1478	1478	2917	58.78	17458/297	3500	3500	5000	3.5	13	1.5	245	58
77	662	1095	48	1.0	PH831_0070K202_0084 EZ703U	1478	1478	2917	58.78	17458/297	3500	3500	5000	3.5	23	1.5	245	59
78	514	827	23	1.9	PH831_0050K302_0115 EZ505U	1848	1848	3646	58.05	1161/20	3200	3200	4500	4.0	14	2.0	245	63
78	654	1081	30	1.5	PH831_0050K302_0115 EZ703U	1848	1848	3646	58.05	1161/20	3200	3200	4500	4.0	23	2.0	245	64
87	458	738	40	1.8	PH831_0100K202_0052 EZ505U	1392	1392	2784	51.77	21070/407	3000	3000	4500	3.5	14	1.5	260	58
87	583	964	50	1.4	PH831_0100K202_0052 EZ703U	1392	1392	2784	51.77	21070/407	3000	3000	4500	3.5	23	1.5	260	59
90	441	710	39	1.5	PH831_0070K202_0071 EZ505U	1421	1421	2917	49.83	14749/296	3000	3000	4500	3.5	14	1.5	245	58
90	561	928	49	1.2	PH831_0070K202_0071 EZ703U	1421	1421	2917	49.83	14749/296	3000	3000	4500	3.5	23	1.5	245	59
96	414	667	39	1.6	PH831_0070K202_0067 EZ505U	1391	1391	2917	46.78	15953/341	3500	3500	5000	3.5	13	1.5	245	58
96	527	871	49	1.2	PH831_0070K202_0067 EZ703U	1391	1391	2917	46.78	15953/341	3500	3500	5000	3.5	23	1.5	245	59
97	410	660	24	2.2	PH831_0050K302_0093 EZ505U	1848	1848	3512	46.34	5375/116	3200	3200	4500	4.0	14	2.0	245	63
97	522	863	30	1.7	PH831_0050K302_0093 EZ703U	1848	1848	3512	46.34	5375/116	3200	3200	4500	4.0	24	2.0	245	64
107	372	598	39	1.7	PH831_0070K202_0060 EZ505U	1342	1342	2917	42.00	42/1	3000	3000	4500	3.5	14	1.5	245	58
107	473	782	50	1.3	PH831_0070K202_0060 EZ703U	1342	1342	2917	42.00	42/1	3000	3000	4500	3.5	24	1.5	245	59
113	354	570	40	2.2	PH831_0100K202_0040 EZ505U	1392	1392	2784	40.00	40/1	3000	3000	4500	3.5	15	1.5	260	58
113	451	745	51	1.7	PH831_0100K202_0040 EZ703U	1392	1392	2784	40.00	40/1	3000	3000	4500	3.5	24	1.5	260	59
124	321	516	40	1.8	PH831_0070K202_0052 EZ505U	1278	1278	2746	36.24	14749/407	3000	3000	4500	3.5	14	1.5	245	58
124	408	675	50	1.4	PH831_0070K202_0052 EZ703U	1278	1278	2746	36.24	14749/407	3000	3000	4500	3.5	24	1.5	245	59
147	270	435	40	2.1	PH831_0070K202_0044 EZ505U	1207	1207	2315	30.55	336/11	3000	3000	4500	3.5	15	1.5	245	58
147	344	569	51	1.6	PH831_0070K202_0044 EZ703U	1207	1207	2315	30.55	336/11	3000	3000	4500	3.5	24	1.5	245	59
161	248	399	40	2.2	PH831_0070K202_0040 EZ505U	1173	1173	2122	28.00	28/1	3000	3000	4500	3.5	15	1.5	245	58
161	315	521	51	1.7	PH831_0070K202_0040 EZ703U	1173	1173	2122	28.00	28/1	3000	3000	4500	3.5	25	1.5	245	59
PH831K (n_{1N} = 6000 min^{-1}, $M_{2acc,max}$ = 1850 Nm)																		
11	776	869	11	1.1	PH831_0100K202_0560 EZ302U	1392	1392	2784	555.4	6665/12	4000	4000	6500	3.5	0.34	1.5	260	49
12	679	760	7.9	1.3	PH831_0070K202_0690 EZ302U	1067	1067	1847	486.0	46655/96	4000	4000	6500	3.5	0.33	1.5	245	49
12	887	1018	10	1.0	PH831_0070K202_0690 EZ303U	1067	1067	1847	486.0	46655/96	4000	4000	6500	3.5	0.44	1.5	245	49
13	646	723	11	1.3	PH831_0100K202_0460 EZ302U	1392	1392	2686	462.3	1849/4	4000	4000	6500	3.5	0.37	1.5	260	49
13	844	969	14	1.0	PH831_0100K202_0460 EZ303U	1392	1392	2686	462.3	1849/4	4000	4000	6500	3.5	0.48	1.5	260	49
15	543	608	6.7	1.8	PH831_0070K202_0560 EZ302U	1281	1281	1970	388.8	9331/24	4000	4000	6500	3.5	0.35	1.5	245	49
15	710	815	8.7	1.4	PH831_0070K202_0560 EZ303U	1281	1281	1970	388.8	9331/24	4000	4000	6500	3.5	0.46	1.5	245	49
15	833	1014	10	1.2	PH831_0070K202_0560 EZ401U	1281	1281	1970	388.8	9331/24	4000	4000	6500	3.5	0.99	1.5	245	51
17	494	553	10	1.3	PH831_0070K202_0500 EZ302U	776	776	1343	353.4	46655/132	4000	4000	6500	3.5	0.33	1.5	245	49
17	645	741	13	1.0	PH831_0070K202_0500 EZ303U	776	776	1343	353.4	46655/132	4000	4000	6500	3.5	0.44	1.5	245	49

n_{2N} [rpm]	M_{2N} [Nm]	$M_{2,0}$ [Nm]	a_{th}	S	Type	M_{2acc} [Nm]	M_{2accHT} [Nm]	M_{2NOT} [Nm]	i	i_{exakt}	n_{1maxDB} EL1,2 [rpm]	n_{1maxDB} EL3,4,5,6 [rpm]	n_{1maxZB} [rpm]	$\Delta\varphi_2$ [arcmin]	J_1 [kgcm²]	$\Delta\varphi_{2red}$ [arcmin]	C_2 [Nm/ arcmin]	m [kg]
PH831K (n_{1N} = 6000 min^{-1}, $M_{2acc,max}$ = 1850 Nm)																		
17	483	541	10	1.8	PH831_0100K202_0350 EZ302U	1392	1392	2232	345.5	9675/28	4000	4000	6500	3.5	0.42	1.5	260	49
17	631	724	13	1.3	PH831_0100K202_0350 EZ303U	1392	1392	2232	345.5	9675/28	4000	4000	6500	3.5	0.53	1.5	260	49
17	740	901	15	1.1	PH831_0100K202_0350 EZ401U	1392	1392	2784	345.5	9675/28	4000	4000	6500	3.5	1.1	1.5	260	51
19	452	506	6.4	2.2	PH831_0070K202_0460 EZ302U	1386	1386	1880	323.6	12943/40	4000	4000	6500	3.5	0.37	1.5	245	49
19	591	678	8.3	1.7	PH831_0070K202_0460 EZ303U	1386	1386	1880	323.6	12943/40	4000	4000	6500	3.5	0.48	1.5	245	49
19	693	844	9.8	1.4	PH831_0070K202_0460 EZ401U	1478	1478	2917	323.6	12943/40	4000	4000	6500	3.5	1.0	1.5	245	51
21	395	442	7.9	2.0	PH831_0070K202_0400 EZ302U	931	931	1432	282.8	9331/33	4000	4000	6500	3.5	0.35	1.5	245	49
21	516	592	10	1.5	PH831_0070K202_0400 EZ303U	931	931	1432	282.8	9331/33	4000	4000	6500	3.5	0.46	1.5	245	49
21	606	737	12	1.3	PH831_0070K202_0400 EZ401U	931	931	1432	282.8	9331/33	4000	4000	6500	3.5	0.99	1.5	245	51
21	599	729	14	1.4	PH831_0100K202_0280 EZ401U	1392	1392	2784	279.5	559/2	4000	4000	6500	3.5	1.1	1.5	260	51
22	597	726	7.3	1.8	PH831_0050K302_0560 EZ401U	1525	1525	2757	278.5	12255/44	3800	3800	6000	4.0	1.0	2.0	245	56
22	882	1141	11	1.2	PH831_0050K302_0560 EZ501U	1525	1525	2757	278.5	12255/44	3800	3800	6000	4.0	3.0	2.0	245	57
22	908	1271	11	1.2	PH831_0050K302_0560 EZ402U	1525	1525	2757	278.5	12255/44	3800	3800	6000	4.0	1.7	2.0	245	57
25	338	378	5.9	3.0	PH831_0070K202_0350 EZ302U	1126	1126	1562	241.9	1935/8	4000	4000	6500	3.5	0.42	1.5	245	49
25	441	507	7.7	2.3	PH831_0070K202_0350 EZ303U	1152	1152	1562	241.9	1935/8	4000	4000	6500	3.5	0.53	1.5	245	49
25	518	631	9.1	1.9	PH831_0070K202_0350 EZ401U	1478	1478	2917	241.9	1935/8	4000	4000	6500	3.5	1.1	1.5	245	51
25	766	991	13	1.3	PH831_0070K202_0350 EZ501U	1478	1478	2917	241.9	1935/8	4000	4000	6500	3.5	3.0	1.5	245	52
25	788	1104	14	1.3	PH831_0070K202_0350 EZ402U	1478	1478	2917	241.9	1935/8	4000	4000	6500	3.5	1.8	1.5	245	52
25	329	368	5.9	3.0	PH831_0070K202_0340 EZ302U	1008	1008	1368	235.3	12943/55	4000	4000	6500	3.5	0.38	1.5	245	49
25	430	493	7.7	2.3	PH831_0070K202_0340 EZ303U	1008	1008	1368	235.3	12943/55	4000	4000	6500	3.5	0.49	1.5	245	49
25	504	614	9.0	2.0	PH831_0070K202_0340 EZ401U	1242	1242	2246	235.3	12943/55	4000	4000	6500	3.5	1.0	1.5	245	51
25	745	964	13	1.3	PH831_0070K202_0340 EZ501U	1242	1242	2246	235.3	12943/55	4000	4000	6500	3.5	3.0	1.5	245	52
25	767	1074	14	1.3	PH831_0070K202_0340 EZ402U	1242	1242	2246	235.3	12943/55	4000	4000	6500	3.5	1.7	1.5	245	52
26	324	363	9.0	2.6	PH831_0100K202_0230 EZ302U	1079	1079	1757	231.8	14835/64	4000	4000	6500	3.5	0.53	1.5	260	49
26	423	486	12	2.0	PH831_0100K202_0230 EZ303U	1296	1296	1757	231.8	14835/64	4000	4000	6500	3.5	0.64	1.5	260	49
26	496	604	14	1.7	PH831_0100K202_0230 EZ401U	1392	1392	2784	231.8	14835/64	4000	4000	6500	3.5	1.2	1.5	260	51
26	734	950	20	1.2	PH831_0100K202_0230 EZ501U	1392	1392	2784	231.8	14835/64	4000	4000	6500	3.5	3.1	1.5	260	52
26	755	1058	21	1.1	PH831_0100K202_0230 EZ402U	1392	1392	2784	231.8	14835/64	4000	4000	6500	3.5	1.9	1.5	260	52
26	495	603	7.0	2.2	PH831_0050K302_0460 EZ401U	1829	1829	3585	231.1	1849/8	3800	3800	6000	4.0	1.1	2.0	245	56
26	732	947	10	1.5	PH831_0050K302_0460 EZ501U	1848	1848	3585	231.1	1849/8	3800	3800	6000	4.0	3.1	2.0	245	57
26	753	1055	11	1.5	PH831_0050K302_0460 EZ402U	1848	1848	3585	231.1	1849/8	3800	3800	6000	4.0	1.8	2.0	245	57
31	419	510	9.2	2.2	PH831_0070K202_0280 EZ401U	1478	1478	2917	195.7	3913/20	4000	4000	6500	3.5	1.1	1.5	245	51
31	619	802	14	1.5	PH831_0070K202_0280 EZ501U	1478	1478	2917	195.7	3913/20	4000	4000	6500	3.5	3.1	1.5	245	52
31	638	893	14	1.5	PH831_0070K202_0280 EZ402U	1478	1478	2917	195.7	3913/20	4000	4000	6500	3.5	1.8	1.5	245	52
34	246	275	6.5	3.4	PH831_0070K202_0250 EZ302U	819	819	1136	175.9	1935/11	4000	4000	6500	3.5	0.44	1.5	245	49
34	321	369	8.5	2.6	PH831_0070K202_0250 EZ303U	838	838	1136	175.9	1935/11	4000	4000	6500	3.5	0.55	1.5	245	49
34	377	459	9.2	2.4	PH831_0070K202_0250 EZ401U	1392	1392	2917	175.9	1935/11	4000	4000	6500	3.5	1.1	1.5	245	51
34	557	721	14	1.6	PH831_0070K202_0250 EZ501U	1478	1478	2917	175.9	1935/11	4000	4000	6500	3.5	3.0	1.5	245	52
34	573	803	14	1.6	PH831_0070K202_0250 EZ402U	1478	1478	2917	175.9	1935/11	4000	4000	6500	3.5	1.8	1.5	245	52
34	852	1278	21	1.1	PH831_0070K202_0250 EZ502U	1478	1478	2917	175.9	1935/11	4000	4000	6500	3.5	5.3	1.5	245	53
34	852	1294	21	1.1	PH831_0070K202_0250 EZ701U	1478	1478	2917	175.9	1935/11	4000	4000	6500	3.5	8.6	1.5	245	55
35	372	453	6.5	3.0	PH831_0050K302_0350 EZ401U	1375	1375	3646	173.7	4515/26	3800	3800	6000	4.0	1.2	2.0	245	56
35	550	712	9.6	2.0	PH831_0050K302_0350 EZ501U	1848	1848	3646	173.7	4515/26	3800	3800	6000	4.0	3.2	2.0	245	57
35	566	792	9.9	1.9	PH831_0050K302_0350 EZ402U	1848	1848	3646	173.7	4515/26	3800	3800	6000	4.0	1.9	2.0	245	57
35	841	1261	15	1.3	PH831_0050K302_0350 EZ502U	1848	1848	3646	173.7	4515/26	3800	3800	6000	4.0	5.5	2.0	245	58
35	841	1277	15	1.3	PH831_0050K302_0350 EZ701U	1848	1848	3646	173.7	4515/26	3800	3800	6000	4.0	8.8	2.0	245	60
35	938	1358	16	1.2	PH831_0050K302_0350 EZ404U	1848	1848	3646	173.7	4515/26	3800	3800	6000	4.0	3.2	2.0	245	59
35	1003	1714	18	1.1	PH831_0050K302_0350 EZ503U	1848	1848	3646	173.7	4515/26	3800	3800	6000	4.0	7.8	2.0	245	60
37	227	254	6.1	3.9	PH831_0070K202_0230 EZ302U	755	755	1230	162.3	20769/128	4000	4000	6500	3.5	0.54	1.5	245	49
37	296	340	7.9	3.0	PH831_0070K202_0230 EZ303U	907	907	1230	162.3	20769/128	4000	4000	6500	3.5	0.65	1.5	245	49
37	348	423	9.3	2.5	PH831_0070K202_0230 EZ401U	1284	1284	2917	162.3	20769/128	4000	4000	6500	3.5	1.2	1.5	245	51
37	514	665	14	1.7	PH831_0070K202_0230 EZ501U	1478	1478	2917	162.3	20769/128	4000	4000	6500	3.5	3.2	1.5	245	52
37	529	740	14	1.7	PH831_0070K202_0230 EZ402U	1478	1478	2917	162.3	20769/128	4000	4000	6500	3.5	1.9	1.5	245	52
37	786	1179	21	1.1	PH831_0070K202_0230 EZ502U	1478	1478	2917	162.3	20769/128	4000	4000	6500	3.5	5.5	1.5	245	53
37	786	1194	21	1.1	PH831_0070K202_0230 EZ701U	1478	1478	2917	162.3	20769/128	4000	4000	6500	3.5	8.8	1.5	245	55
37	876	1269	23	1.0	PH831_0070K202_0230 EZ404U	1478	1478	2917	162.3	20769/128	4000	4000	6500	3.5	3.2	1.5	245	54
42	305	371	9.4	2.8	PH831_0070K202_0200 EZ401U	1126	1126	2917	142.3	7826/55	4000	4000	6500	3.5	1.1	1.5	245	51
42	450	583	14	1.9	PH831_0070K202_0200 EZ501U	1478	1478	2917	142.3	7826/55	4000	4000	6500	3.5	3.1	1.5	245	52
42	464	649	14	1.8	PH831_0070K202_0200 EZ402U	1478	1478	2917	142.3	7826/55	4000	4000	6500	3.5	1.8	1.5	245	52
42	689	1033	21	1.2	PH831_0070K202_0200 EZ502U	1478	1478	2917	142.3	7826/55	4000	4000	6500	3.5	5.4	1.5	245	53
42	689	1047	21	1.2	PH831_0070K202_0200 EZ701U	1478	1478	2917	142.3	7826/55	4000	4000	6500	3.5	8.7	1.5	245	55
42	768	1113	24	1.1	PH831_0070K202_0200 EZ404U	1478	1478	2917	142.3	7826/55	4000	4000	6500	3.5	3.2	1.5	245	54
42	821	1404	25	1.0	PH831_0070K202_0200 EZ503U	1478	1478	2917	142.3	7826/55	4000	4000	6500	3.5	7.8	1.5	245	55
43	299	364	6.2	3.7	PH831_0050K302_0280 EZ401U	1103	1103	3646	139.4	17845/128	3800	3800	6000	4.0	1.3	2.0	245	56

n_{2N} [rpm]	M_{2N} [Nm]	$M_{2,0}$ [Nm]	a_{th}	S	Type	M_{2acc} [Nm]	M_{2accHT} [Nm]	M_{2NOT} [Nm]	i	i_{exakt}	n_{1maxDB} EL1,2 [rpm]	n_{1maxDB} EL3,4,5,6 [rpm]	n_{1maxZB} [rpm]	$\Delta\varphi_2$ [arcmin]	J_1 [kgcm²]	$\Delta\varphi_{2red}$ [arcmin]	C_2 [Nm/arcmin]	m [kg]
PH831K (n_{1N} = 6000 min^{-1}, $M_{2acc,max}$ = 1850 Nm)																		
43	441	571	9.1	2.5	PH831_0050K302_0280 EZ501U	1848	1848	3646	139.4	17845/128	3800	3800	6000	4.0	3.3	2.0	245	57
43	454	636	9.4	2.4	PH831_0050K302_0280 EZ402U	1848	1848	3646	139.4	17845/128	3800	3800	6000	4.0	2.0	2.0	245	57
43	675	1013	14	1.6	PH831_0050K302_0280 EZ502U	1848	1848	3646	139.4	17845/128	3800	3800	6000	4.0	5.6	2.0	245	58
43	675	1026	14	1.6	PH831_0050K302_0280 EZ701U	1848	1848	3646	139.4	17845/128	3800	3800	6000	4.0	8.9	2.0	245	60
43	753	1091	16	1.5	PH831_0050K302_0280 EZ404U	1848	1848	3646	139.4	17845/128	3800	3800	6000	4.0	3.4	2.0	245	59
43	805	1376	17	1.4	PH831_0050K302_0280 EZ503U	1848	1848	3646	139.4	17845/128	3800	3800	6000	4.0	8.0	2.0	245	60
43	935	1856	19	1.2	PH831_0050K302_0280 EZ702U	1848	1848	3646	139.4	17845/128	3800	3800	6000	4.0	14	2.0	245	62
51	165	185	7.5	4.0	PH831_0070K202_0170 EZ302U	549	549	895	118.0	20769/176	4000	4000	6500	3.5	0.58	1.5	245	49
51	215	247	9.8	3.1	PH831_0070K202_0170 EZ303U	660	660	895	118.0	20769/176	4000	4000	6500	3.5	0.69	1.5	245	49
51	253	308	9.5	3.1	PH831_0070K202_0170 EZ401U	934	934	2917	118.0	20769/176	4000	4000	6500	3.5	1.2	1.5	245	51
51	374	484	14	2.1	PH831_0070K202_0170 EZ501U	1478	1478	2917	118.0	20769/176	4000	4000	6500	3.5	3.2	1.5	245	52
51	385	538	15	2.1	PH831_0070K202_0170 EZ402U	1478	1478	2917	118.0	20769/176	4000	4000	6500	3.5	1.9	1.5	245	52
51	571	857	22	1.4	PH831_0070K202_0170 EZ502U	1478	1478	2917	118.0	20769/176	4000	4000	6500	3.5	5.5	1.5	245	53
51	571	868	22	1.4	PH831_0070K202_0170 EZ701U	1478	1478	2917	118.0	20769/176	4000	4000	6500	3.5	8.8	1.5	245	55
51	637	923	24	1.2	PH831_0070K202_0170 EZ404U	1478	1478	2917	118.0	20769/176	4000	4000	6500	3.5	3.3	1.5	245	54
51	681	1165	26	1.2	PH831_0070K202_0170 EZ503U	1478	1478	2917	118.0	20769/176	4000	4000	6500	3.5	7.9	1.5	245	55
51	791	1571	30	1.0	PH831_0070K202_0170 EZ702U	1478	1478	2917	118.0	20769/176	4000	4000	6500	3.5	14	1.5	245	57
52	249	304	5.9	4.4	PH831_0050K302_0230 EZ401U	922	922	3358	116.5	2795/24	3800	3800	6000	4.0	1.4	2.0	245	56
52	369	477	8.7	3.0	PH831_0050K302_0230 EZ501U	1735	1735	3358	116.5	2795/24	3800	3800	6000	4.0	3.4	2.0	245	57
52	380	531	9.0	2.9	PH831_0050K302_0230 EZ402U	1735	1735	3358	116.5	2795/24	3800	3800	6000	4.0	2.1	2.0	245	57
52	564	846	13	2.0	PH831_0050K302_0230 EZ502U	1848	1848	3358	116.5	2795/24	3800	3800	6000	4.0	5.7	2.0	245	58
52	564	857	13	2.0	PH831_0050K302_0230 EZ701U	1848	1848	3646	116.5	2795/24	3800	3800	6000	4.0	9.0	2.0	245	60
52	629	911	15	1.7	PH831_0050K302_0230 EZ404U	1848	1848	3358	116.5	2795/24	3800	3800	6000	4.0	3.5	2.0	245	59
52	672	1150	16	1.6	PH831_0050K302_0230 EZ503U	1848	1848	3358	116.5	2795/24	3800	3800	6000	4.0	8.1	2.0	245	60
52	781	1551	18	1.4	PH831_0050K302_0230 EZ702U	1848	1848	3646	116.5	2795/24	3800	3800	6000	4.0	14	2.0	245	62
PH941K (n_{1N} = 2000 min^{-1}, $M_{2acc,max}$ = 5000 Nm)																		
26	2750	3084	62	1.1	PH941_0060K513_0130 EZ813U	5000	5000	10000	76.85	1537/20	2300	2300	3600	4.0	112	2.0	730	122
33	2179	2444	57	1.4	PH941_0060K513_0100 EZ813U	5000	5000	10000	60.90	609/10	1900	1900	3200	4.0	115	2.0	730	122
41	1746	1959	54	1.7	PH941_0060K513_0081 EZ813U	5000	5000	9720	48.80	17081/350	1900	1900	3200	4.0	119	2.0	730	122
41	2587	3080	80	1.2	PH941_0060K513_0081 EZ815U	5000	5000	9720	48.80	17081/350	1900	1900	3200	4.0	182	2.0	730	135
49	1453	1629	43	1.9	PH941_0040K513_0100 EZ813U	3840	3840	7500	40.60	203/5	1900	1900	3200	4.5	116	2.5	525	122
49	2152	2562	63	1.3	PH941_0040K513_0100 EZ815U	3840	3840	7500	40.60	203/5	1900	1900	3200	4.5	179	2.5	525	135
61	1164	1306	43	2.2	PH941_0040K513_0081 EZ813U	3840	3840	6480	32.54	17081/525	1900	1900	3200	4.5	120	2.5	525	122
61	1724	2053	63	1.5	PH941_0040K513_0081 EZ815U	3840	3840	6480	32.54	17081/525	1900	1900	3200	4.5	183	2.5	525	135
PH941K (n_{1N} = 3000 min^{-1}, $M_{2acc,max}$ = 5000 Nm)																		
6.4	1837	2008	12	1.6	PH941_0060K513_0780 EZ501U	5000	5000	8724	465.6	26071/56	3400	3400	5000	4.0	3.3	2.0	730	91
7.7	1528	1670	11	2.0	PH941_0060K513_0650 EZ501U	5000	5000	7950	387.3	25172/65	3400	3400	5000	4.0	3.5	2.0	730	91
7.7	2630	2843	19	1.1	PH941_0060K513_0650 EZ502U	5000	5000	7950	387.3	25172/65	3400	3400	5000	4.0	5.8	2.0	730	93
7.7	2630	2950	19	1.1	PH941_0060K513_0650 EZ701U	5000	5000	10000	387.3	25172/65	3400	3400	5000	4.0	9.1	2.0	730	95
10	1140	1246	10	2.6	PH941_0060K513_0480 EZ501U	4243	4243	6763	289.0	8091/28	3400	3400	5000	4.0	3.9	2.0	730	91
10	1962	2122	17	1.5	PH941_0060K513_0480 EZ502U	4986	4986	6763	289.0	8091/28	3400	3400	5000	4.0	6.2	2.0	730	93
10	1962	2201	17	1.5	PH941_0060K513_0480 EZ701U	5000	5000	10000	289.0	8091/28	3400	3400	5000	4.0	9.5	2.0	730	95
10	2572	2944	23	1.2	PH941_0060K513_0480 EZ503U	4986	4986	6763	289.0	8091/28	3400	3400	5000	4.0	8.6	2.0	730	94
13	1570	1761	16	1.9	PH941_0060K513_0390 EZ701U	4243	4243	10000	231.2	8091/35	3400	3400	5000	4.0	10	2.0	730	95
13	2546	3055	26	1.2	PH941_0060K513_0390 EZ702U	5000	5000	10000	231.2	8091/35	3400	3400	5000	4.0	15	2.0	730	97
13	2864	3395	30	1.0	PH941_0060K513_0390 EZ505U	5000	5000	10000	231.2	8091/35	3400	3400	5000	4.0	14	2.0	730	97
15	1317	1477	15	2.3	PH941_0060K513_0320 EZ701U	3558	3558	10000	193.8	62031/320	3400	3400	5000	4.0	10	2.0	730	95
15	2135	2562	25	1.4	PH941_0060K513_0320 EZ702U	5000	5000	10000	193.8	62031/320	3400	3400	5000	4.0	16	2.0	730	97
15	2402	2846	28	1.2	PH941_0060K513_0320 EZ505U	5000	5000	10000	193.8	62031/320	3400	3400	5000	4.0	14	2.0	730	97
15	2935	3700	34	1.0	PH941_0060K513_0320 EZ703U	5000	5000	10000	193.8	62031/320	3400	3400	5000	4.0	24	2.0	730	99
21	992	1113	14	3.0	PH941_0060K513_0240 EZ701U	2681	2681	10000	146.1	11687/80	2800	2800	4200	4.0	11	2.0	730	95
21	1609	1931	23	1.9	PH941_0060K513_0240 EZ702U	5000	5000	10000	146.1	11687/80	2800	2800	4200	4.0	17	2.0	730	97
21	1810	2145	26	1.7	PH941_0060K513_0240 EZ505U	5000	5000	10000	146.1	11687/80	2800	2800	4200	4.0	15	2.0	730	97
21	2212	2789	32	1.4	PH941_0060K513_0240 EZ703U	5000	5000	10000	146.1	11687/80	2800	2800	4200	4.0	25	2.0	730	99
21	2856	4049	41	1.1	PH941_0060K513_0240 EZ705U	5000	5000	10000	146.1	11687/80	2800	2800	4200	4.0	37	2.0	730	105
26	789	885	13	3.8	PH941_0060K513_0195 EZ701U	2131	2131	8669	116.1	27869/240	2800	2800	4200	4.0	13	2.0	730	95
26	1279	1535	21	2.3	PH941_0060K513_0195 EZ702U	4369	4369	8669	116.1	27869/240	2800	2800	4200	4.0	18	2.0	730	97
26	1439	1705	24	2.1	PH941_0060K513_0195 EZ505U	5000	5000	8669	116.1	27869/240	2800	2800	4200	4.0	16	2.0	730	97
26	1758	2217	29	1.7	PH941_0060K513_0195 EZ703U	5000	5000	8669	116.1	27869/240	2800	2800	4200	4.0	26	2.0	730	99
26	2270	3218	38	1.3	PH941_0060K513_0195 EZ705U	5000	5000	10000	116.1	27869/240	2800	2800	4200	4.0	38	2.0	730	105
31	656	736	13	4.6	PH941_0060K513_0160 EZ701U	1772	1772	7209	96.56	26071/270	2300	2300	3600	4.0	14	2.0	730	95
31	1063	1276	20	2.8	PH941_0060K513_0160 EZ702U	3633	3633	7209	96.56	26071/270	2300	2300	3600	4.0	19	2.0	730	97
31	1196	1418	23	2.5	PH941_0060K513_0160 EZ505U	5000	5000	7209	96.56	26071/270	2300	2300	3600	4.0	18	2.0	730	97
31	1462	1843	28	2.1	PH941_0060K513_0160 EZ703U	5000	5000	7209	96.56	26071/270	2300	2300	3600	4.0	27	2.0	730	99

n_{2N}	M_{2N}	$M_{2,0}$	a_{th}	S	Type	M_{2acc}	M_{2accHT}	M_{2NOT}	i	i_{exakt}	n_{1maxDB}		n_{1maxZB}	$\Delta\varphi_2$	J_1	$\Delta\varphi_{2red}$	C_2	m
											EL1,2	EL3,4,5,6						
[rpm]	[Nm]	[Nm]				[Nm]	[Nm]	[Nm]			[rpm]	[rpm]	[rpm]	[arcmin]	[kgcm²]	[arcmin]	[Nm/ arcmin]	[kg]
PH941K (n_{1N} = 3000 min^{-1}, $M_{2acc,max}$ = 5000 Nm)																		
31	1888	2676	36	1.6	PH941_0060K513_0160 EZ705U	5000	5000	10000	96.56	26071/270	2300	2300	3600	4.0	39	2.0	730	105
39	1502	2130	34	2.0	PH941_0060K513_0130 EZ705U	5000	5000	10000	76.85	1537/20	2300	2300	3600	4.0	42	2.0	730	105
49	1190	1688	31	2.5	PH941_0060K513_0100 EZ705U	5000	5000	10000	60.90	609/10	1900	1900	3200	4.0	45	2.0	730	105
61	954	1353	29	3.1	PH941_0060K513_0081 EZ705U	4658	4658	9720	48.80	17081/350	1900	1900	3200	4.0	49	2.0	730	105
74	794	1125	27	3.0	PH941_0040K513_0100 EZ705U	3840	3840	7500	40.60	203/5	1900	1900	3200	4.5	45	2.5	525	105
92	636	902	27	3.4	PH941_0040K513_0081 EZ705U	3105	3105	6480	32.54	17081/525	1900	1900	3200	4.5	50	2.5	525	105
PH941K (n_{1N} = 4000 min^{-1}, $M_{2acc,max}$ = 5000 Nm)																		
34	2686	4657	45	1.1	PH941_0060K513_0195 EZ813U	5000	5000	10000	116.1	27869/240	2800	2800	4200	4.0	109	2.0	730	122
34	2783	7155	47	1.1	PH941_0060K513_0195 EZ815U	5000	5000	10000	116.1	27869/240	2800	2800	4200	4.0	172	2.0	730	135
PH941K (n_{1N} = 4500 min^{-1}, $M_{2acc,max}$ = 5000 Nm)																		
16	2519	4058	22	1.2	PH941_0060K513_0480 EZ505U	5000	5000	10000	289.0	8091/28	3400	3400	5000	4.0	13	2.0	730	97
19	2016	3246	21	1.5	PH941_0060K513_0390 EZ505U	5000	5000	10000	231.2	8091/35	3400	3400	5000	4.0	14	2.0	730	97
19	2567	4243	27	1.2	PH941_0060K513_0390 EZ703U	5000	5000	10000	231.2	8091/35	3400	3400	5000	4.0	23	2.0	730	99
23	1690	2722	20	1.8	PH941_0060K513_0320 EZ505U	5000	5000	10000	193.8	62031/320	3400	3400	5000	4.0	14	2.0	730	97
23	2153	3558	25	1.4	PH941_0060K513_0320 EZ703U	5000	5000	10000	193.8	62031/320	3400	3400	5000	4.0	24	2.0	730	99
23	2918	5337	34	1.0	PH941_0060K513_0320 EZ705U	5000	5000	10000	193.8	62031/320	3400	3400	5000	4.0	36	2.0	730	105
PH1041K (n_{1N} = 2000 min^{-1}, $M_{2acc,max}$ = 7500 Nm)																		
18	4078	4574	46	1.2	PH1041_0060K613_0190 EZ813U	7500	–	15000	114.0	51057/448	2600	2600	4000	4.0	112	–	1210	167
21	3407	3821	43	1.5	PH1041_0060K613_0160 EZ813U	7500	–	15000	95.21	54839/576	2200	2200	3500	4.0	115	–	1210	167
26	2711	3041	40	1.8	PH1041_0060K613_0125 EZ813U	7500	–	15000	75.77	9699/128	2200	2200	3500	4.0	119	–	1210	167
26	4016	4782	60	1.2	PH1041_0060K613_0125 EZ815U	7500	–	15000	75.77	9699/128	2200	2200	3500	4.0	182	–	1210	179
41	1741	1952	36	2.9	PH1041_0060K613_0081 EZ813U	6250	–	15000	48.64	255285/5248	1800	1800	3000	4.0	132	–	1210	167
41	2578	3070	53	1.9	PH1041_0060K613_0081 EZ815U	7500	–	15000	48.64	255285/5248	1800	1800	3000	4.0	195	–	1210	179
PH1041K (n_{1N} = 3000 min^{-1}, $M_{2acc,max}$ = 7500 Nm)																		
6.6	1803	1971	7.6	2.8	PH1041_0060K613_0760 EZ501U	6708	–	9379	456.8	380091/832	3100	3100	4500	4.0	3.7	–	1210	136
6.6	3103	3354	13	1.6	PH1041_0060K613_0760 EZ502U	6915	–	9379	456.8	380091/832	3100	3100	4500	4.0	6.0	–	1210	137
6.6	3103	3480	13	1.6	PH1041_0060K613_0760 EZ701U	7500	–	15000	456.8	380091/832	3100	3100	4500	4.0	9.3	–	1210	139
6.6	4067	4654	17	1.2	PH1041_0060K613_0760 EZ503U	6915	–	9379	456.8	380091/832	3100	3100	4500	4.0	8.4	–	1210	139
7.8	2596	2912	12	1.9	PH1041_0060K613_0640 EZ701U	7016	–	15000	382.3	391437/1024	3100	3100	4500	4.0	9.6	–	1210	139
7.8	4210	5052	20	1.2	PH1041_0060K613_0640 EZ702U	7500	–	15000	382.3	391437/1024	3100	3100	4500	4.0	15	–	1210	142
7.8	4736	5613	23	1.1	PH1041_0060K613_0640 EZ505U	7500	–	15000	382.3	391437/1024	3100	3100	4500	4.0	13	–	1210	142
10	1945	2181	11	2.6	PH1041_0060K613_0480 EZ701U	5257	–	14337	286.4	119133/416	3100	3100	4500	4.0	10	–	1210	139
10	3154	3785	19	1.6	PH1041_0060K613_0480 EZ702U	7500	–	14337	286.4	119133/416	3100	3100	4500	4.0	16	–	1210	142
10	3548	4205	21	1.4	PH1041_0060K613_0480 EZ505U	7500	–	14337	286.4	119133/416	3100	3100	4500	4.0	14	–	1210	142
10	4337	5467	25	1.2	PH1041_0060K613_0480 EZ703U	7500	–	14337	286.4	119133/416	3100	3100	4500	4.0	23	–	1210	144
13	1561	1751	11	3.2	PH1041_0060K613_0380 EZ701U	4220	–	13589	229.9	470859/2048	3100	3100	4500	4.0	11	–	1210	139
13	2532	3038	17	2.0	PH1041_0060K613_0380 EZ702U	7500	–	13589	229.9	470859/2048	3100	3100	4500	4.0	16	–	1210	142
13	2849	3376	20	1.8	PH1041_0060K613_0380 EZ505U	7500	–	13589	229.9	470859/2048	3100	3100	4500	4.0	15	–	1210	142
13	3482	4389	24	1.4	PH1041_0060K613_0380 EZ703U	7500	–	13589	229.9	470859/2048	3100	3100	4500	4.0	24	–	1210	144
13	4494	6372	31	1.1	PH1041_0060K613_0380 EZ705U	7500	–	15000	229.9	470859/2048	3100	3100	4500	4.0	37	–	1210	149
16	1298	1456	10	3.9	PH1041_0060K613_0320 EZ701U	3508	–	12521	191.1	391437/2048	3100	3100	4500	4.0	12	–	1210	139
16	2105	2526	16	2.4	PH1041_0060K613_0320 EZ702U	7192	–	12521	191.1	391437/2048	3100	3100	4500	4.0	17	–	1210	142
16	2368	2807	18	2.1	PH1041_0060K613_0320 EZ505U	7500	–	12521	191.1	391437/2048	3100	3100	4500	4.0	16	–	1210	142
16	2894	3649	23	1.7	PH1041_0060K613_0320 EZ703U	7500	–	12521	191.1	391437/2048	3100	3100	4500	4.0	25	–	1210	144
16	3736	5297	29	1.3	PH1041_0060K613_0320 EZ705U	7500	–	15000	191.1	391437/2048	3100	3100	4500	4.0	38	–	1210	149
21	2816	3992	27	1.8	PH1041_0060K613_0240 EZ705U	7500	–	15000	144.0	73749/512	2600	2600	4000	4.0	40	–	1210	149
26	1255	1506	14	4.0	PH1041_0060K613_0190 EZ702U	4288	–	8508	114.0	51057/448	2600	2600	4000	4.0	22	–	1210	142
26	1412	1673	16	3.5	PH1041_0060K613_0190 EZ505U	6273	–	8508	114.0	51057/448	2600	2600	4000	4.0	20	–	1210	142
26	1726	2176	19	2.9	PH1041_0060K613_0190 EZ703U	6273	–	8508	114.0	51057/448	2600	2600	4000	4.0	29	–	1210	144
26	2228	3159	25	2.2	PH1041_0060K613_0190 EZ705U	7500	–	15000	114.0	51057/448	2600	2600	4000	4.0	42	–	1210	149
32	1861	2639	24	2.7	PH1041_0060K613_0160 EZ705U	7500	–	15000	95.21	54839/576	2200	2200	3500	4.0	44	–	1210	149
40	1481	2100	22	3.4	PH1041_0060K613_0125 EZ705U	7232	–	15000	75.77	9699/128	2200	2200	3500	4.0	48	–	1210	149
62	951	1348	22	4.6	PH1041_0060K613_0081 EZ705U	4643	–	9689	48.64	255285/5248	1800	1800	3000	4.0	62	–	1210	149
PH1041K (n_{1N} = 4000 min^{-1}, $M_{2acc,max}$ = 7500 Nm)																		
21	4420	7665	34	1.1	PH1041_0060K613_0320 EZ813U	7500	–	15000	191.1	391437/2048	3100	3100	4500	4.0	108	–	1210	167
21	4580	11777	36	1.1	PH1041_0060K613_0320 EZ815U	7500	–	15000	191.1	391437/2048	3100	3100	4500	4.0	171	–	1210	179
28	3331	5777	32	1.5	PH1041_0060K613_0240 EZ813U	7500	–	15000	144.0	73749/512	2600	2600	4000	4.0	110	–	1210	167
28	3452	8876	33	1.4	PH1041_0060K613_0240 EZ815U	7500	–	15000	144.0	73749/512	2600	2600	4000	4.0	173	–	1210	179
35	2636	4571	30	1.9	PH1041_0060K613_0190 EZ813U	7500	–	15000	114.0	51057/448	2600	2600	4000	4.0	112	–	1210	167
35	2731	7022	31	1.8	PH1041_0060K613_0190 EZ815U	7500	–	15000	114.0	51057/448	2600	2600	4000	4.0	175	–	1210	179
PH1041K (n_{1N} = 4500 min^{-1}, $M_{2acc,max}$ = 7500 Nm)																		
9.9	3983	6415	17	1.3	PH1041_0060K613_0760 EZ505U	7500	–	15000	456.8	380091/832	3100	3100	4500	4.0	13	–	1210	142
12	3333	5368	16	1.5	PH1041_0060K613_0640 EZ505U	7500	–	15000	382.3	391437/1024	3100	3100	4500	4.0	13	–	1210	142

n_{2N} [rpm]	M_{2N} [Nm]	$M_{2,0}$ [Nm]	a_{th}	S	Type	M_{2acc} [Nm]	M_{2accHT} [Nm]	M_{2NOT} [Nm]	i	i_{exakt}	n_{1maxDB} EL1,2 [rpm]	n_{1maxDB} EL3,4,5,6 [rpm]	n_{1maxZB} [rpm]	$\Delta\varphi_2$ [arcmin]	J_1 [kgcm²]	$\Delta\varphi_{2red}$ [arcmin]	C_2 [Nm/arcmin]	m [kg]
PH1041K (n_{1N} = 4500 min^{-1}, $M_{2acc,max}$ = 7500 Nm)																		
12	4245	7016	20	1.2	PH1041_0060K613_0640 EZ703U	7500	–	15000	382.3	391437/1024	3100	3100	4500	4.0	23	–	1210	144
16	2497	4021	15	2.0	PH1041_0060K613_0480 EZ505U	7500	–	14337	286.4	119133/416	3100	3100	4500	4.0	14	–	1210	142
16	3180	5257	19	1.6	PH1041_0060K613_0480 EZ703U	7500	–	14337	286.4	119133/416	3100	3100	4500	4.0	23	–	1210	144
20	2005	3228	14	2.5	PH1041_0060K613_0380 EZ505U	7500	–	13589	229.9	470859/2048	3100	3100	4500	4.0	15	–	1210	142
20	2553	4220	18	2.0	PH1041_0060K613_0380 EZ703U	7500	–	13589	229.9	470859/2048	3100	3100	4500	4.0	24	–	1210	144
20	3460	6330	24	1.4	PH1041_0060K613_0380 EZ705U	7500	–	15000	229.9	470859/2048	3100	3100	4500	4.0	37	–	1210	149
24	1666	2684	13	3.0	PH1041_0060K613_0320 EZ505U	7500	–	12521	191.1	391437/2048	3100	3100	4500	4.0	16	–	1210	142
24	2122	3508	17	2.4	PH1041_0060K613_0320 EZ703U	7500	–	12521	191.1	391437/2048	3100	3100	4500	4.0	25	–	1210	144
24	2877	5262	22	1.7	PH1041_0060K613_0320 EZ705U	7500	–	15000	191.1	391437/2048	3100	3100	4500	4.0	38	–	1210	149

13.3 Dimensional drawings

In this chapter you can find the dimensions of the geared motors.

There is a dimensional drawing for every possible shaft/housing design, each with the tables for gearbox dimensions, motor dimensions and geared motor dimensions.

Dimensions can exceed the specifications of ISO 2768-mK due to casting tolerances or accumulation of individual tolerances.

We reserve the right to make dimensional changes due to ongoing technical development.

You can download 3D models of our standard drives at https://configurator.stoeber.de/en-US/.

Combination options and the dimensions of forced ventilated geared motors can also be found at https://configurator.stoeber.de/en-US/.

13.3.1 F shaft design (flange shaft)

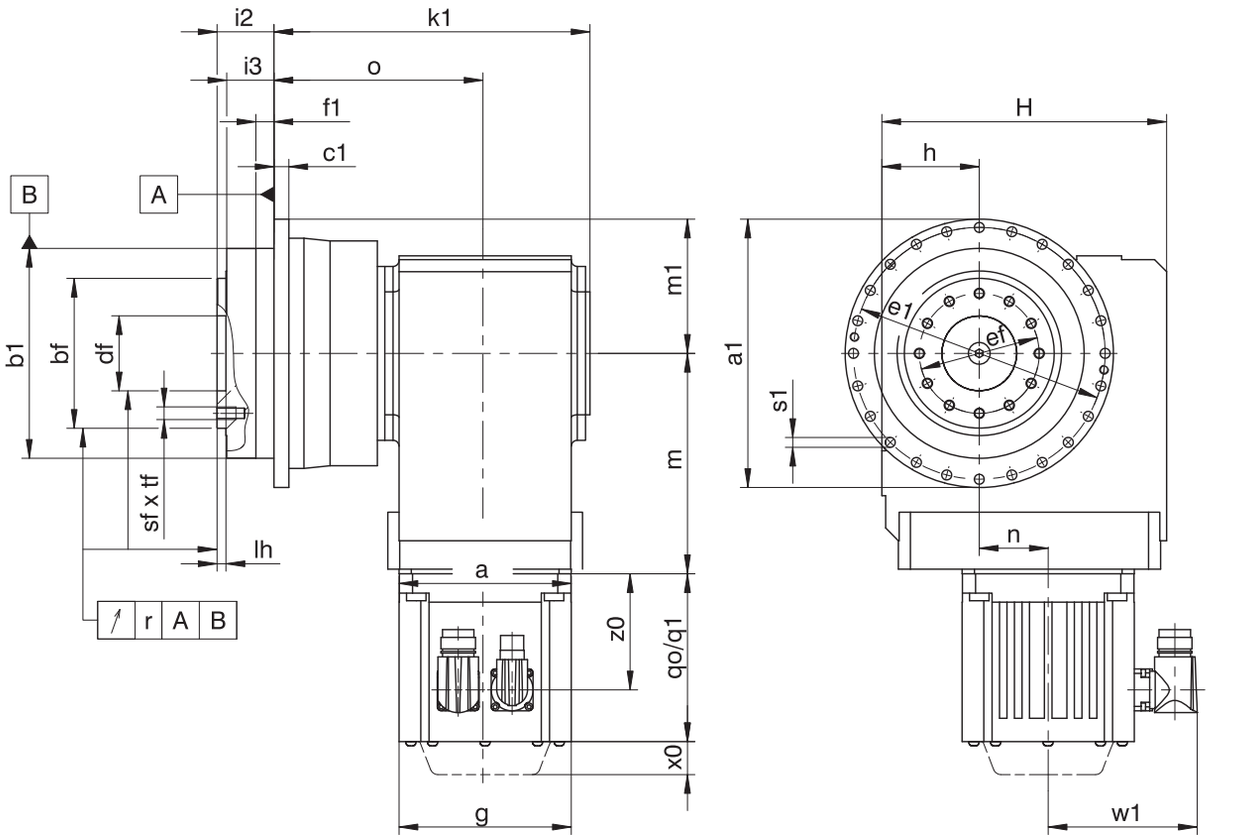

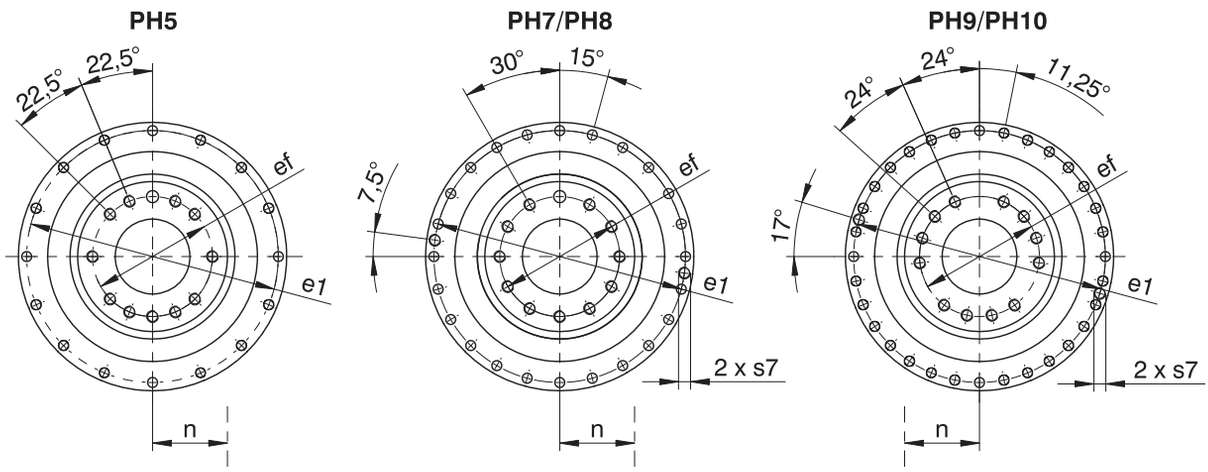

q0	Applies to motors without brake.	q1	Applies to motors with brake.
x0	Applies to encoders using an optical measuring method	w1	Different for the One Cable Solution (OCS), see the chapter [▶ 17.4]

Dimensions of gearboxes

Type	Øa1	Øb1	Øbf	c1	Ødf	Øe1	Øef	f1	h	H	i2	i3	k1	lh	m1	o	r	Øs1	s7	sf	tf
PH531_K102_	145	110_{h7}	80_{h7}	8	40^{H6}	135	63	12	60	160	29	23	180.0	6	72.5	124.0	0.020	5.5	–	M6	11
PH731_K102_	179	140_{h7}	100_{h7}	10	50^{H6}	168	80	12	60	160	38	32	183.0	6	89.5	127.0	0.025	6.6	–	M8	14
PH731_K202_	179	140_{h7}	100_{h7}	10	50^{H6}	168	80	12	65	190	38	32	211.0	6	89.5	141.0	0.025	6.6	–	M8	14
PH831_K202_	247	200_{h7}	160_{h7}	12	80^{H6}	233	125	15	65	190	50	42	246.0	8	123.5	176.0	0.030	9.0	M10	M10	18
PH831_K302_	247	200_{h7}	160_{h7}	12	80^{H6}	233	125	15	75	213	50	42	259.5	8	123.5	183.5	0.030	9.0	M10	M10	18
PH941_K513_	300	255_{h7}	180_{h7}	18	90^{H6}	280	140	20	160	260	66	55	292.5	12	150.0	196.5	0.030	13.5	M8	M16	24
PH1041_K613_	330	285_{h7}	200_{h7}	20	95^{H6}	310	160	20	190	310	75	60	318.5	10	165.0	215.0	0.040	13.5	M10	M20	28

Dimensions of motors

Type	□g	q0	q1	w1	x0	z0
EZ301U	72	114.0	154.0	55.5	21	78.5
EZ302U	72	136.0	176.0	55.5	21	100.5
EZ303U	72	158.0	198.0	55.5	21	122.5
EZ401U	98	118.5	167.0	91.0	22	76.5
EZ402U	98	143.5	192.0	91.0	22	101.5
EZ404U	98	193.5	242.0	91.0	22	151.5
EZ501U	115	112.0	166.5	100.0	22	77.5
EZ502U	115	137.0	191.5	100.0	22	102.5
EZ503U	115	162.0	216.5	100.0	22	127.5
EZ505U	115	212.0	266.5	100.0	22	177.5
EZ701U	145	125.0	184.0	115.0	22	87.0
EZ702U	145	150.0	209.0	115.0	22	112.0
EZ703U	145	175.0	234.0	115.0	22	137.0
EZ705U	145	230.0	289.0	134.0	22	188.0
EZ813U	190	273.5	350.5	156.5	22	219.5
EZ815U	190	355.5	432.5	156.5	22	301.5

Dimensions of geared motors

Type	EZ3			EZ4			EZ5			EZ7			EZ8		
	a	m	n	a	m	n	a	m	n	a	m	n	a	m	n
PH531_K102_	□72	124	36.0	□98	124	36.0	□115	128	36.0	□145	130	36.0	–	–	–
PH731_K102_	□72	124	36.0	□98	124	36.0	□115	128	36.0	□145	130	36.0	–	–	–
PH731_K202_	□72	143	46.0	□98	143	46.0	□115	147	46.0	□145	149	46.0	–	–	–
PH831_K202_	□72	143	46.0	□98	143	46.0	□115	147	46.0	□145	149	46.0	–	–	–
PH831_K302_	–	–	–	∅140	163	52.5	□115	167	52.5	□145	169	52.5	–	–	–
PH941_K513_	–	–	–	–	–	–	∅160	172	15.0	□145	174	15.0	□190	177	15.0
PH1041_K613_	–	–	–	–	–	–	∅160	191	18.0	∅200	193	18.0	□190	196	18.0

13.4 Type designation

This chapter shows you an explanation of the type designation with the associated options.

Additional ordering information not included in the type designation can be found at the end of the chapter.

Example code

PH	7	3	1	S	F	S	S	0100	K102VF	0115	EZ302U

Explanation

Code	Designation	Design
PH	Type	Planetary gearbox
7	Size	7 (example)
3 4	Generation	Generation 3 Generation 4
1	Stages	Single-stage
S	Housing	Standard
F	Shaft	Flange shaft
S V	Bearing	Standard bearing Reinforced bearing (PH3 – PH5)
S R	Backlash	Standard Reduced (PH3 – PH9)
0100	Transmission ratio of output (i x 10)	i = 10 (example)
K102VF	Input	K1 right-angle geared motor (example)
0115	Transmission ratio of input (i x 10 rounded)	i = 11.57 (example)
EZ302U	Motor	EZ synchronous servo motor

To complete the type designation, also specify the following in your order:

- For a detailed type designation of the motor, see the chapter [▶ 17.5]
- For the mounting position, see the chapter [▶ 13.5.3]
- Output gearbox side 3 or 4, see the chapter [▶ 13.5.3]
- Radial shaft seal rings at the output made of NBR or FKM (option), see the chapter [▶ 13.6.3]
- Position of the plug connectors, see the chapter [▶ 13.5.5]
- Reverse operation of the output shaft from ±20° to ±90° and horizontal installation, see the chapter [▶ 13.6.4]

To make selecting your geared motor easy, use our STOBER Configurator at https://configurator.stoeber.de/en-US/.

You can find a detailed description of the nameplate in the chapter [▶ 17.5.1].

13.5 Product description

13.5.1 Input options

EZ synchronous servo motor



Catalog ID 442437_en

MB motor adapter +
EZ synchronous servo motor



Catalog ID 443311_en

The corresponding catalogs can be found at http://www.stoeber.de/en/downloads/

Enter the ID of the catalog in the Search term field.

13.5.2 Installation conditions

The torque and force values listed in this catalog are valid under the following conditions:

- When the flange shaft and gear housing are fastened on the machine side using screws of strength class 12.9
- When the gear housings are adjusted at pilot øb1. The machine-side fit must be H7.
- When the flange shaft is adjusted using the connecting element at pilot øbf or ødf

13.5.3 Mounting positions

The following table shows the standard mounting positions.

The numbers identify the gearbox sides. The mounting position is defined by the gearbox side facing downwards.

EL1	EL2	EL3
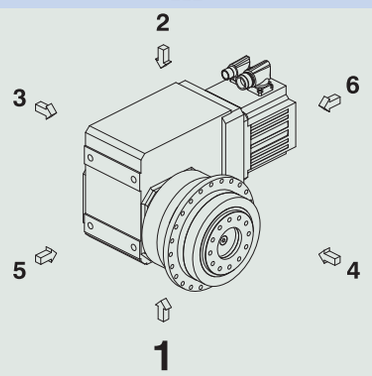	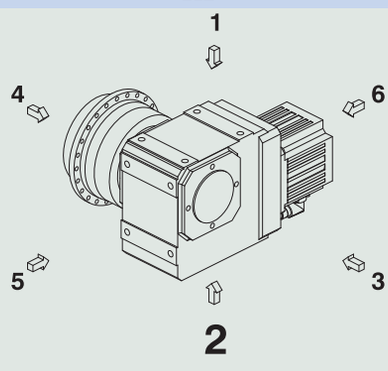	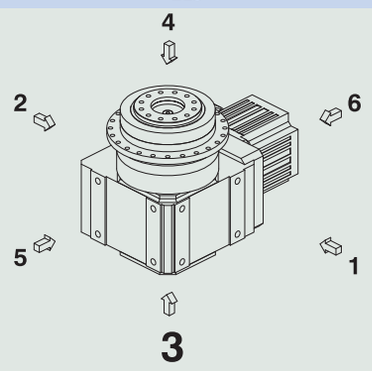
EL4	**EL5**	**EL6**
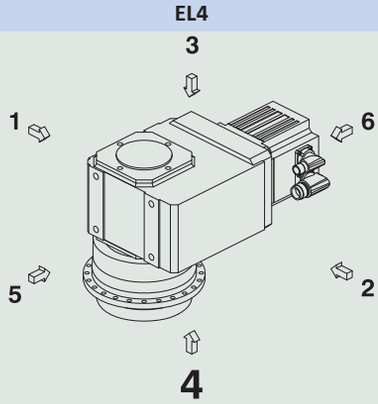	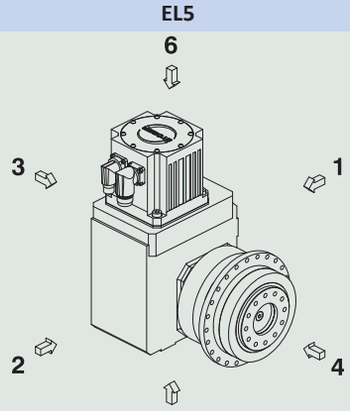	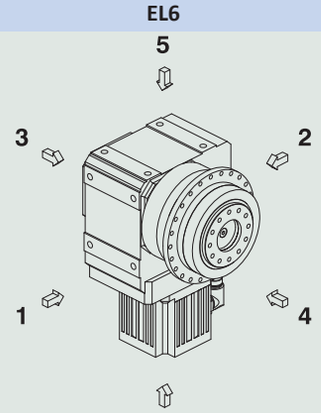

Since the lubricant filling volume of the gearbox depends on the mounting position, the mounting position must be specified when ordering.

13.5.4 Lubricants

STOBER fills the gearboxes with the amount and type of lubricant specified on the nameplate. The filling volume and the structure of the gearboxes depend on the mounting position.

Only install the gearboxes in the intended mounting position! Reposition the gearboxes only after consulting STOBER. Otherwise, STOBER assumes no liability for the gearboxes.

You will receive lubricants for use in the food industry upon request.

13.5.5 Position of the plug connectors

Mounting position EL1	Mounting position EL4
Plug connector in 270° position (standard)	Plug connector in 270° position (standard)
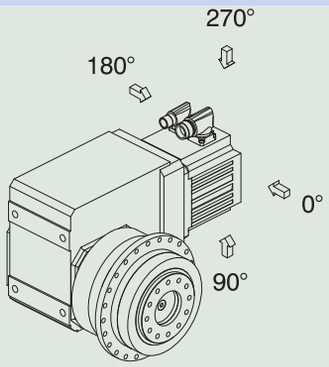	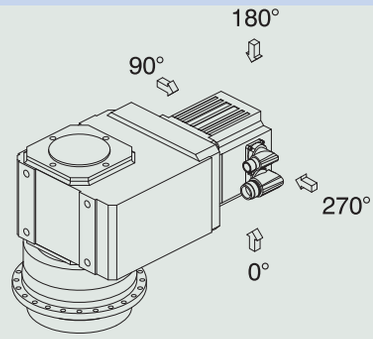

Indicate variations for your geared motor in the order.

Note that the plug connector position rotates along with the geared motor if the geared motor is in another mounting position.

13.5.6 Other product features

Feature	Value
Max. permitted gearbox temperature (on the surface of the gearbox)	≤ 90 °C
Paint	Black RAL 9005
Explosion-proof design in accordance with (ATEX) Directive 2014/34/EU (optional)	Not available
Efficiency:	
η_{get} three-stage	93%
η_{get} four-stage	92%
Protection class:[1]	
Gearbox	IP65
Motor	IP56, optionally IP66

13.5.7 Direction of rotation

Output side 4	Output side 3
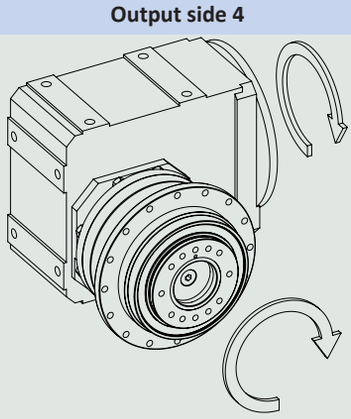	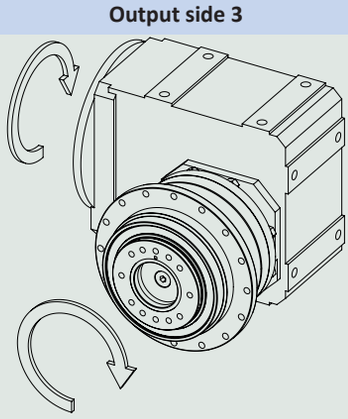

The pictures show mounting position EL1.

[1] Observe the protection class of all the components.

13.6 Project configuration

Project your drives using our SERVOsoft designing software. Download SERVOsoft free of charge after registration at https://www.stoeber.de/en/services/info-servosoft/.

It is the most convenient and reliable method of drive selection, as the entire torque/speed curve of the application is displayed and evaluated here in the curve of the geared motor.

In this chapter, only limit values for specific operating points can be taken into consideration for manual drive selection.

An explanation of the formula symbols can be found in Chapter [▷ 20.1].

The formula symbols for values actually present in the application are marked with *.

13.6.1 Drive selection

Drive selection for gearboxes

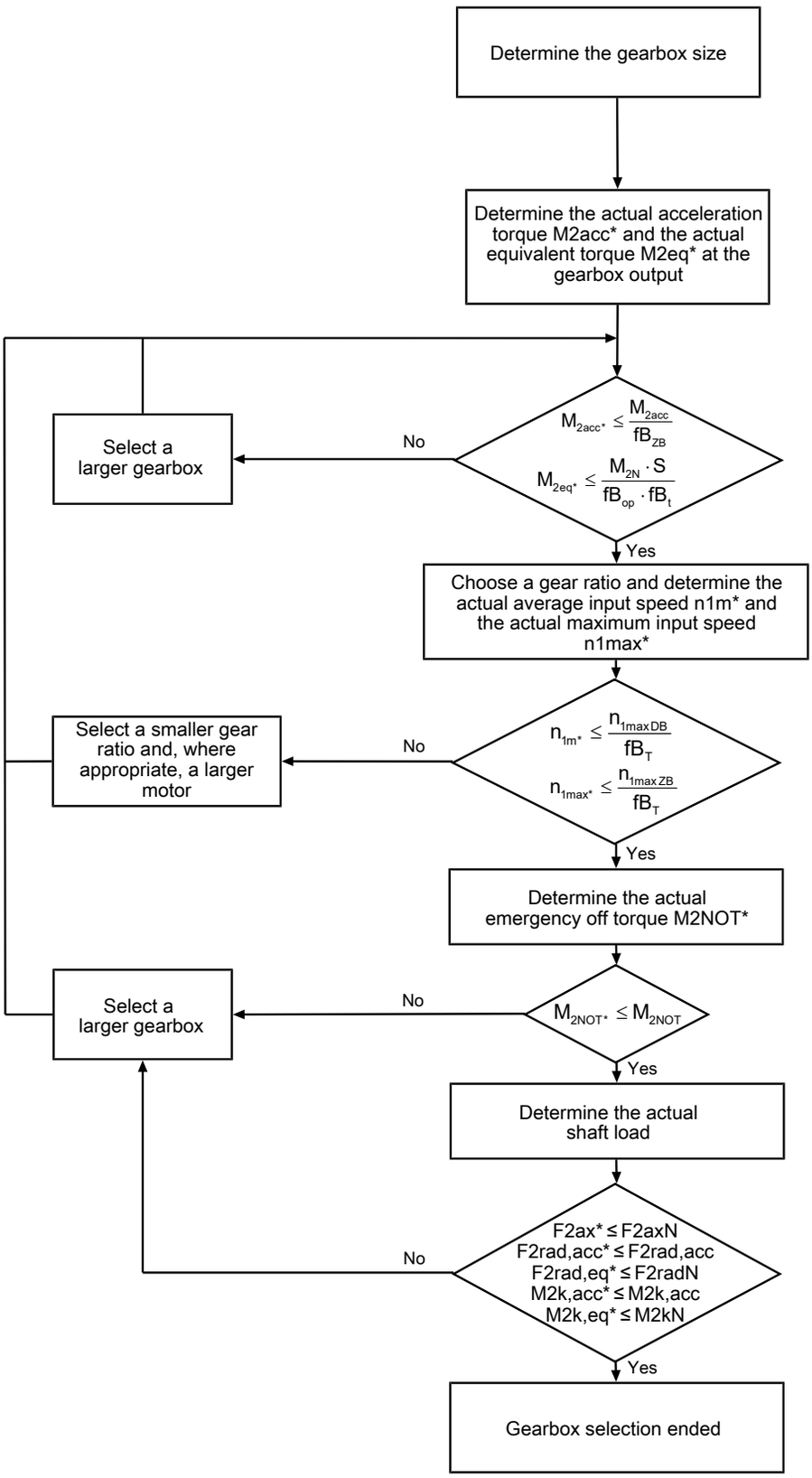

Calculate the forces and tilting torques in the chapter Permitted shaft loads.

Refer to the selection tables for the values for i, n_{1maxDB}, n_{1maxZB}, M_{2acc} (M_{2accHT} for reduced backlash), M_{2NOT}, M_{2N} and S.

The values for fB_T, fB_{op}, fB_t and fB_{ZB} can be found in the corresponding tables in this chapter.

Drive selection for motors

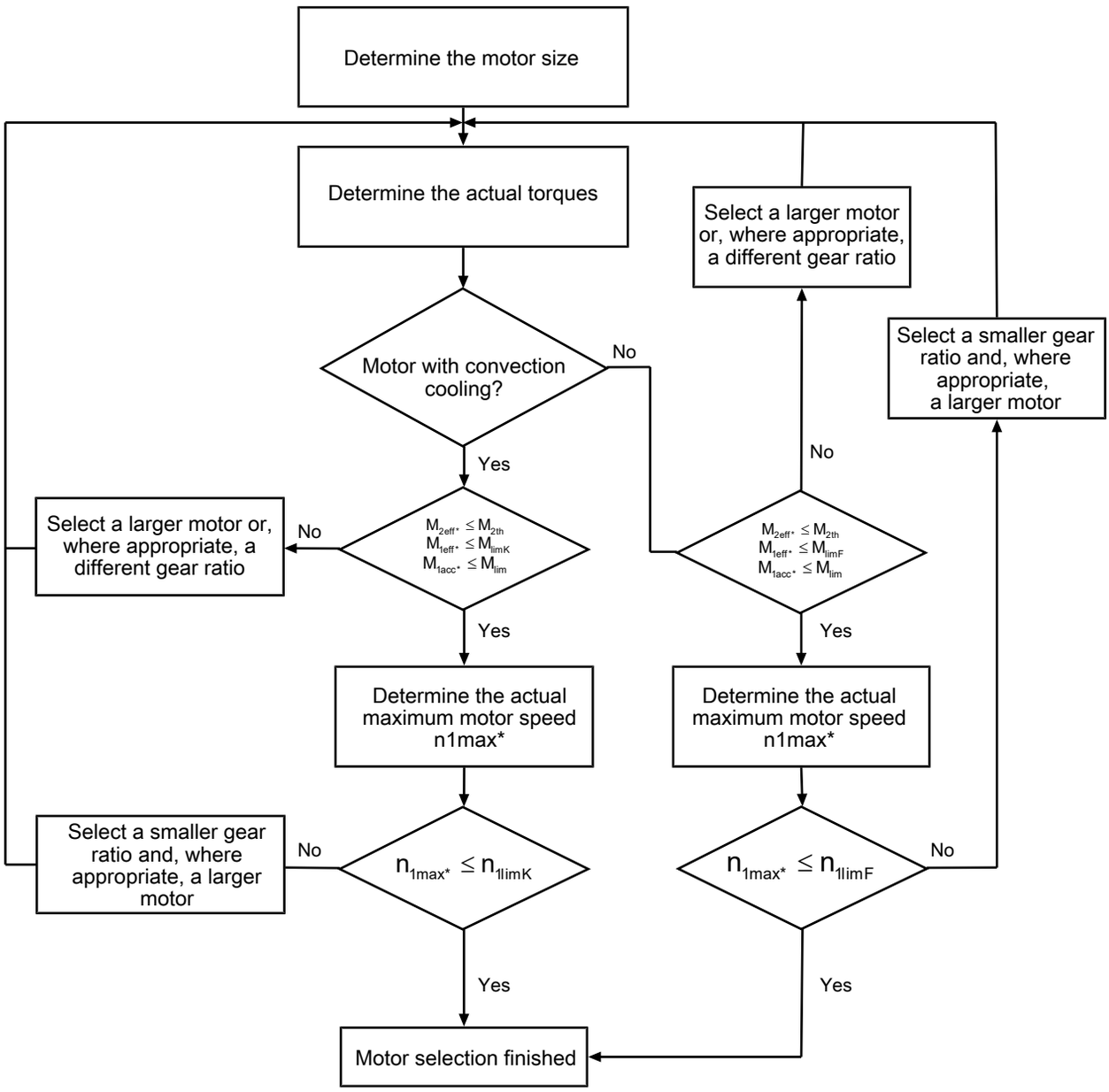

The value for M_{lim}, M_{limK}, M_{limF}, n_{1limK} and n_{1limF} can be found in the motor characteristic curve in the chapter [▷ 17.3]. Note the size, nominal speed n_N and cooling type of the motor.

Example of cyclic operation

The following calculations are based on a representation of the power taken from the output based in accordance with the following example:

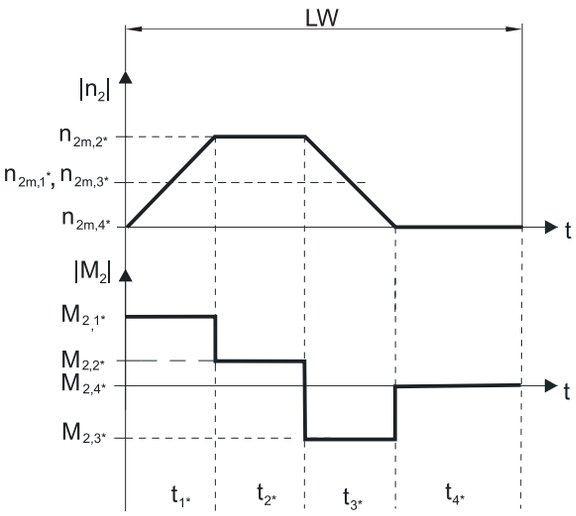

Calculation of the actual maximum acceleration torques

$$M_{2acc*} = J_{tot} \cdot \frac{\Delta n_2}{9{,}55 \cdot \Delta t} + M_{L*}$$

$$M_{1acc*} = \frac{M_{2acc*}}{i \cdot \eta_{get}} + J_1 \cdot \frac{\Delta n_1}{9{,}55 \cdot \Delta t}$$

Calculation of the actual average input speed

$$n_{1m*} = n_{2m*} \cdot i$$

$$n_{2m*} = \frac{\left|n_{2m,1*}\right| \cdot t_{1*} + \ldots + \left|n_{2m,n*}\right| \cdot t_{n*}}{t_{1*} + \ldots + t_{n*}}$$

If $t_{1*} + \ldots + t_{3*} \geq 6$ min, calculate n_{2m*} without the rest phase t_{4*}.

The values for the ratio i can be found in the selection tables.

Calculation of the actual effective torque

$$M_{2eff*} = \sqrt{\frac{t_{1*} \cdot M_{2,1*}{}^2 + \ldots + t_{n*} \cdot M_{2,n*}{}^2}{t_{1*} + \ldots + t_{n*}}}$$

Calculation of the actual emergency off torque

$$M_{2NOT*} = J_{tot} \cdot \frac{\Delta n_2}{9.55 \cdot \Delta t} + M_{L*}$$

Calculation of the actual equivalent torque

$$M_{2eq*} = \sqrt[3]{\frac{\left|n_{2m,1*}\right| \cdot t_{1*} \cdot \left|M_{2,1*}{}^3\right| + \ldots + \left|n_{2m,n*}\right| \cdot t_{n*} \cdot \left|M_{2,n*}{}^3\right|}{\left|n_{2m,1*}\right| \cdot t_{1*} + \ldots + \left|n_{2m,n*}\right| \cdot t_{n*}}}$$

Calculation of the thermal limit torque

Calculate the thermal limit torque M_{2th} for a duty cycle $ED_{10} > 50\%$ and the actual average input speed n_{1m*}. (At $K_{mot,th} \leq 0$ you must reduce the average input speed n_{1m*} accordingly or select another geared motor size.)

$$M_{2th} = M_{op} \cdot i \cdot K_{mot,th}$$

$$K_{mot,th} = 0{,}93 - \frac{a_{th}}{1000} \cdot athEL \cdot fB_T \cdot \left(\frac{n_{1m*}}{1000}\right)^2$$

The values for i and a_{th} can be found in the selection tables.

The values for a_{thEL} and fB_T can be found in the corresponding tables in this chapter.

The value for the torque of the motor at operating point M_{op} with the determined average input speed n_{1m*} can be found in the motor characteristic curve in the chapter [▶ 17.3]. Note the size, nominal speed n_N and cooling type of the motor. The figure below shows an example of reading the torque M_{op} of a motor with convection cooling at the operating point.

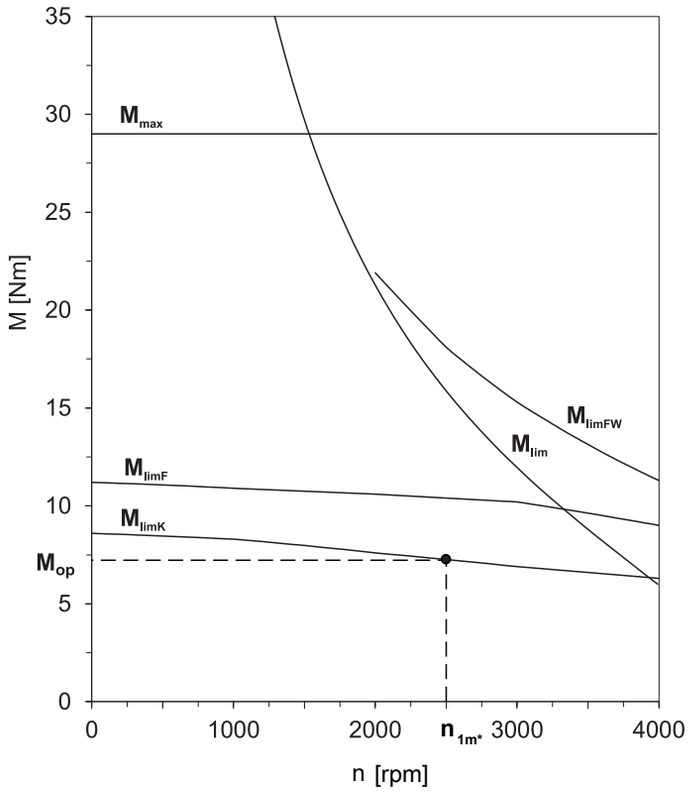

Operating factors

Parameter a_{thEL}

Mounting position	a_{thEL}
EL1, 2	1.0
EL3, 4, 5, 6	1.1

Operating mode	fB_{op}
Uniform continuous operation	1.00
Cyclic operation	1.25
Reversing load cyclic operation	1.40

Run time	fB_t
Daily runtime ≤ 8 h	1.00
Daily runtime ≤ 16 h	1.15
Daily runtime ≤ 24 h	1.20

Cyclic operation	fB_{ZB}
≤ 1000 load changes/hour (LW/h)	1.00
> 1000 load changes/hour (LW/h)	1.15

Temperature		fB_T
Motor cooling	**Surrounding temperature**	
Motor with forced ventilation	≤ 20 °C	0.9
	≤ 30 °C	1.0
	≤ 40 °C	1.15
Motor with convection cooling	≤ 20 °C	1.0
	≤ 30 °C	1.1
	≤ 40 °C	1.25

Notes

- The maximum permitted gearbox temperature (see the "Other product features" chapter) must not be exceeded. Doing so may result in damage to the geared motor.
- For braking from full speed (for example when the power fails or when setting up the machine), note the permitted gearbox torques (M_{2acc}, M_{2NOT}) in the selection tables.

13.6.2 Permitted shaft loads for the output shaft

The values specified in the tables apply to the permitted shaft loads:

- For shaft dimensions in accordance with the catalog
- For output speeds $n_{2m*} \leq 100$ rpm ($F^{2axN} = F_{2ax100}$; $F_{2radN} = F_{2rad100}$; $M_{2kN} = M_{2k100}$)
- Only if radial forces on the gearbox are stabilized by its pilots (housing, flange shaft)

Permitted shaft loads for standard bearing S

Type	z_2 [mm]	F_{2ax100} [N]	$F_{2rad100}$ [N]	$F_{2rad,acc}$ [N]	M_{2k100} [Nm]	$M_{2k,acc}$ [Nm]	C_{2k} [Nm/ arcmin]
PH3	62.5	1650	1613	1613	101	101	75
PH4	83.0	2150	3095	3571	257	296	192
PH5	97.0	4150	4536	4897	440	475	429
PH7	86.0	6150	17045	17045	1466	1466	500
PH8	125.5	10050	27778	27778	3486	3486	1550
PH9	155.0	33000	48387	70968	7500	11000	7500
PH10	171.0	50000	51462	73099	8800	12500	9500

Permitted shaft loads for reinforced bearing V

Type	z_2 [mm]	F_{2ax100} [N]	$F_{2rad100}$ [N]	$F_{2rad,acc}$ [N]	M_{2k100} [Nm]	$M_{2k,acc}$ [Nm]	C_{2k} [Nm/ arcmin]
PH3	66.5	2200	2250	2250	150	150	80
PH4	88.5	2900	4000	4000	354	354	217
PH5	104.0	5000	5500	5500	572	572	478

For other output speeds, download diagrams at https://configurator.stoeber.de/en-US/.

The following applies to output speeds $n_{2m*} > 100$ rpm:

$$F_{2axN} = \frac{F_{2ax100}}{\sqrt[3]{\frac{n_{2m*}}{100\ \text{rpm}}}} \qquad F_{2radN} = \frac{F_{2rad100}}{\sqrt[3]{\frac{n_{2m*}}{100\ \text{rpm}}}} \qquad M_{2kN} = \frac{M_{2k100}}{\sqrt[3]{\frac{n_{2m*}}{100\ \text{rpm}}}}$$

The values for F_{2ax100}, $F_{2rad100}$ and M_{2k100} can be found in the table "Permitted shaft loads" in this chapter.

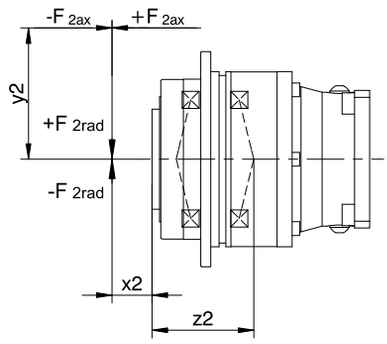

Fig. 1: Force application points

You can determine the permitted radial forces from the permitted tilting torque M_{2kN} and $M_{2k,acc}$. The actual radial forces may not exceed the permitted radial forces. The permitted radial forces pertain to the shaft end (x2 = 0).

$$M_{2k,acc^*} = \frac{2 \cdot F_{2ax^*} \cdot y_2 + F_{2rad,acc^*} \cdot (x_2 + z_2)}{1000}$$

For applications with multiple axial and/or radial forces, you must add the forces as vectors.

In the event of EMERGENCY OFF operation (max. 1000 load changes), you can multiply the permitted forces and torques for F_{2ax100}, $F_{2rad100}$ and M_{2k100} by a factor of two.

Also note the calculation for equivalent values:

$$M_{2k,eq^*} = \sqrt[3]{\frac{|n_{2m,1^*}| \cdot t_{1^*} \cdot |M_{2k,acc,1^*}^{\ 3}| + \ldots + |n_{2m,n^*}| \cdot t_{n^*} \cdot |M_{2k,acc,n^*}^{\ 3}|}{|n_{2m,1^*}| \cdot t_{1^*} + \ldots + |n_{2m,n^*}| \cdot t_{n^*}}}$$

$$F_{2rad,eq^*} = \sqrt[3]{\frac{|n_{2m,1^*}| \cdot t_{1^*} \cdot |F_{2rad,acc,1^*}^{\ 3}| + \ldots + |n_{2m,n^*}| \cdot t_{n^*} \cdot |F_{2rad,acc,n^*}^{\ 3}|}{|n_{2m,1^*}| \cdot t_{1^*} + \ldots + |n_{2m,n^*}| \cdot t_{n^*}}}$$

The following apply to the bearing service life L_{10h} (ED_{10} ≤ 40%):

L_{10h} > 10000 h with 1 < M_{2kN}/M_{2k^*} < 1.25

L_{10h} > 20000 h with 1.25 < M_{2kN}/M_{2k^*} < 1.5

L_{10h} > 30000 h with 1.5 < M_{2kN}/M_{2k^*}

For different duty cycles:

$$L_{10h} > L_{10h(ED_{10}=40\%)} \cdot \frac{40\%}{ED_{10}}$$

13.6.3 Recommendation for radial shaft seal rings

For a duty cycle > 60% and higher surrounding temperatures, we recommend radial shaft seal rings made of FKM at the output.

Properties:

- Excellent temperature resistance
- High chemical stability
- Very good resistance to aging
- Excellent resistance in oils and greases
- For use in the food, beverage and pharmaceutical industries

Leak-proofness

Our gearboxes are equipped with high-quality radial shaft seal rings and checked for leaks. However, a leak cannot be fully ruled out over the length of use of a gearbox. If you use a gearbox with goods incompatible with the lubricant, you must take measures to prevent direct contact with the gearbox lubricant in case of a leak.

13.6.4 Reverse operation

To ensure lubrication for circulating gearing parts during cyclic reverse operation from ± 20° to ± 90° at the output, pay careful attention to the position of the output shaft for the horizontal mounting of the gearbox, as shown in the diagrams below.

The images show the center position of reverse operation.

Cyclic reverse operation ≤ ± 20° on request.

Size 3 – 10
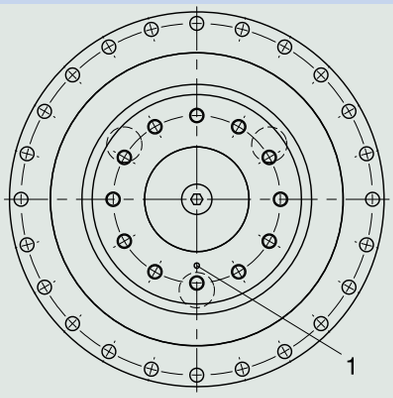
1 Position of the mark: bottom

Please note that the hole pattern may be different, depending on the size of the planetary gearbox.

13.7 Additional documentation

Additional documentation related to the product can be found at http://www.stoeber.de/en/downloads/

Enter the ID of the documentation in the Search term field.

Documentation	ID
Operating manual gearboxes, geared motors PH53K – PH83K, PH94K – PH104K	443358_en

14 PHQK right-angle planetary geared motors

Table of contents

14.1 Overview 398

14.2 Selection tables 399

14.3 Dimensional drawings 411

14.3.1 PHQ5 – PHQ10 F shaft design (flange shaft) 412

14.3.2 PHQ11 – PHQ12 F shaft design (flange shaft) 414

14.4 Type designation 416

14.5 Product description 416

14.5.1 Input options 416

14.5.2 Installation conditions 417

14.5.3 Mounting positions 417

14.5.4 Lubricants 417

14.5.5 Position of the plug connectors 418

14.5.6 Other product features 418

14.5.7 Direction of rotation 418

14.6 Project configuration 419

14.6.1 Drive selection 420

14.6.2 Permitted shaft loads for the output shaft 424

14.6.3 Recommendation for radial shaft seal rings 425

14.6.4 Reverse operation 426

14.7 Additional documentation 426

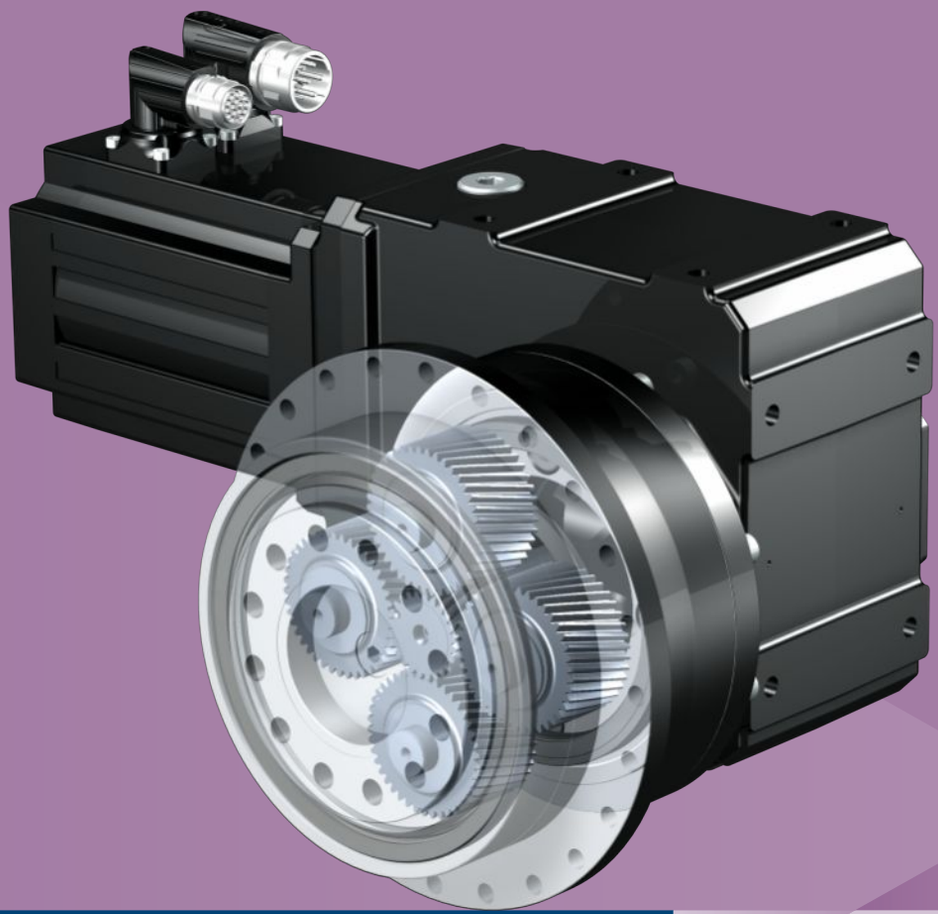

14

Right-angle planetary geared motors

PHQK

14.1 Overview

Quattro-Power precision right-angle planetary geared motors

Features

Power density	★★★★★
Backlash	★★★★★
Price category	€€€€€
Shaft load	★★★★★
Smooth operation	★★★☆☆
Torsional stiffness	★★★★★
Mass moment of inertia	★★★★★
Helical gearing	✓
Maintenance-free	✓
High power density	✓
Continuous operation without cooling	✓
Stiff output bearings due to pretension	✓
Reinforced output bearing (PHQ4 – PHQ5)	✓ (optional)
Compact and highly dynamic due to direct motor attachment	✓

Key ★☆☆☆☆ good | ★★★★★ excellent
€ Economy | €€€€€ Premium

Technical data

i	22 – 2242
M_{2acc}	123 – 43000 Nm
$\Delta\phi_2$	1.5 – 4 arcmin
η_{get}	90 – 93 %

14.2 Selection tables

The technical data specified in the selection tables applies to:

- Installation altitudes up to 1000 m above sea level
- Surrounding temperatures from 0 °C to 40 °C
- Drives with convection-cooled motors (e.g. EZ401**U**)

For the technical data on drives with forced ventilated motors (e.g. EZ401**B**), refer to https://configurator.stoeber.de/en-US/.

An explanation of the formula symbols can be found in Chapter [▷ 20.1].

n_{2N} [rpm]	M_{2N} [Nm]	$M_{2,0}$ [Nm]	a_{th}	S	Type	M_{2acc} [Nm]	M_{2accHT} [Nm]	M_{2NOT} [Nm]	i	i_{exakt}	n_{1maxDB} EL1,2 [rpm]	n_{1maxDB} EL3,4,5,6 [rpm]	n_{1maxZB} [rpm]	$\Delta\varphi_2$ [arcmin]	J_1 [kgcm²]	$\Delta\varphi_{2red}$ [arcmin]	C_2 [Nm/arcmin]	m [kg]
PHQ531K (n_{1N} = 3000 min^{-1}, $M_{2acc,max}$ = 550 Nm)																		
9.7	267	273	10	1.0	PHQ531_0055K102_0560 EZ301U	542	542	948	308.5	6479/21	4000	4000	7000	4.0	0.21	2.0	70	17
11	240	245	11	1.1	PHQ531_0055K102_0500 EZ301U	316	316	572	276.7	55341/200	4000	4000	7000	4.0	0.21	2.0	70	17
12	223	228	10	1.3	PHQ531_0055K102_0470 EZ301U	550	550	948	258.0	25289/98	4000	4000	7000	4.0	0.22	2.0	70	17
14	192	196	9.6	1.5	PHQ531_0055K102_0400 EZ301U	389	389	704	221.7	4433/20	4000	4000	7000	4.0	0.21	2.0	70	17
16	167	171	9.3	1.7	PHQ531_0055K102_0350 EZ301U	503	503	948	193.1	20273/105	4000	4000	7000	4.0	0.23	2.0	70	17
16	161	164	9.2	1.7	PHQ531_0055K102_0340 EZ301U	462	462	836	185.4	51909/280	4000	4000	7000	4.0	0.22	2.0	70	17
16	274	290	16	1.0	PHQ531_0055K102_0340 EZ302U	462	462	836	185.4	51909/280	4000	4000	7000	4.0	0.32	2.0	70	18
19	134	136	8.8	2.1	PHQ531_0055K102_0280 EZ301U	402	402	948	154.3	6479/42	4000	4000	7000	4.0	0.26	2.0	70	17
19	228	241	15	1.2	PHQ531_0055K102_0280 EZ302U	550	550	948	154.3	6479/42	4000	4000	7000	4.0	0.36	2.0	70	18
22	120	123	8.6	2.3	PHQ531_0055K102_0250 EZ301U	362	362	806	138.7	13871/100	4000	4000	7000	4.0	0.24	2.0	70	17
22	205	217	15	1.4	PHQ531_0055K102_0250 EZ302U	550	550	806	138.7	13871/100	4000	4000	7000	4.0	0.34	2.0	70	18
22	267	283	19	1.0	PHQ531_0055K102_0250 EZ303U	550	550	806	138.7	13871/100	4000	4000	7000	4.0	0.45	2.0	70	18
23	111	113	8.4	2.5	PHQ531_0055K102_0230 EZ301U	334	334	911	128.0	6270/49	4000	4000	7000	4.0	0.28	2.0	70	17
23	189	200	14	1.5	PHQ531_0055K102_0230 EZ302U	550	550	911	128.0	6270/49	4000	4000	7000	4.0	0.38	2.0	70	18
23	247	261	19	1.1	PHQ531_0055K102_0230 EZ303U	550	550	911	128.0	6270/49	4000	4000	7000	4.0	0.49	2.0	70	18
27	96	98	8.1	2.9	PHQ531_0055K102_0200 EZ301U	289	289	694	110.8	4433/40	4000	4000	7000	4.0	0.26	2.0	70	17
27	164	173	14	1.7	PHQ531_0055K102_0200 EZ302U	512	512	694	110.8	4433/40	4000	4000	7000	4.0	0.36	2.0	70	18
27	214	226	18	1.3	PHQ531_0055K102_0200 EZ303U	512	512	694	110.8	4433/40	4000	4000	7000	4.0	0.47	2.0	70	18
31	84	85	7.8	3.3	PHQ531_0055K102_0175 EZ301U	252	252	732	96.60	11495/119	4000	4000	6000	4.0	0.32	2.0	70	17
31	143	151	13	2.0	PHQ531_0055K102_0175 EZ302U	450	450	732	96.60	11495/119	4000	4000	6000	4.0	0.42	2.0	70	18
31	186	197	17	1.5	PHQ531_0055K102_0175 EZ303U	540	540	732	96.60	11495/119	4000	4000	6000	4.0	0.53	2.0	70	18
31	252	270	24	1.1	PHQ531_0055K102_0175 EZ401U	550	550	948	96.60	11495/119	4000	4000	6000	4.0	1.1	2.0	70	20
33	80	81	7.7	3.5	PHQ531_0055K102_0165 EZ301U	240	240	655	91.93	1287/14	4000	4000	7000	4.0	0.29	2.0	70	17
33	136	144	13	2.1	PHQ531_0055K102_0165 EZ302U	428	428	655	91.93	1287/14	4000	4000	7000	4.0	0.39	2.0	70	18
33	177	187	17	1.6	PHQ531_0055K102_0165 EZ303U	483	483	655	91.93	1287/14	4000	4000	7000	4.0	0.50	2.0	70	18
33	240	257	23	1.2	PHQ531_0055K102_0165 EZ401U	550	550	948	91.93	1287/14	4000	4000	7000	4.0	1.0	2.0	70	20
39	67	69	7.4	4.2	PHQ531_0055K102_0140 EZ301U	202	202	588	77.63	2717/35	4000	4000	6000	4.0	0.37	2.0	70	17
39	115	121	13	2.4	PHQ531_0055K102_0140 EZ302U	361	361	588	77.63	2717/35	4000	4000	6000	4.0	0.47	2.0	70	18
39	150	158	17	1.9	PHQ531_0055K102_0140 EZ303U	434	434	588	77.63	2717/35	4000	4000	6000	4.0	0.58	2.0	70	18
39	202	217	22	1.4	PHQ531_0055K102_0140 EZ401U	550	550	948	77.63	2717/35	4000	4000	6000	4.0	1.1	2.0	70	20
43	60	61	7.2	4.7	PHQ531_0055K102_0125 EZ301U	181	181	526	69.40	4719/68	4000	4000	6000	4.0	0.35	2.0	70	17
43	103	109	12	2.7	PHQ531_0055K102_0125 EZ302U	323	323	526	69.40	4719/68	4000	4000	6000	4.0	0.45	2.0	70	18
43	134	142	16	2.1	PHQ531_0055K102_0125 EZ303U	388	388	526	69.40	4719/68	4000	4000	6000	4.0	0.56	2.0	70	18
43	181	194	22	1.5	PHQ531_0055K102_0125 EZ401U	549	549	948	69.40	4719/68	4000	4000	6000	4.0	1.1	2.0	70	20
43	278	304	33	1.0	PHQ531_0055K102_0125 EZ501U	550	550	948	69.40	4719/68	4000	4000	6000	4.0	3.1	2.0	70	21
47	94	100	12	3.0	PHQ531_0055K102_0115 EZ302U	296	296	482	63.61	1463/23	3600	3600	5500	4.0	0.53	2.0	70	18
47	123	130	16	2.3	PHQ531_0055K102_0115 EZ303U	355	355	482	63.61	1463/23	3600	3600	5500	4.0	0.64	2.0	70	18
47	166	178	21	1.7	PHQ531_0055K102_0115 EZ401U	503	503	948	63.61	1463/23	3600	3600	5500	4.0	1.2	2.0	70	20
47	255	278	33	1.1	PHQ531_0055K102_0115 EZ501U	550	550	948	63.61	1463/23	3600	3600	5500	4.0	3.1	2.0	70	21
47	278	308	36	1.0	PHQ531_0055K102_0115 EZ402U	550	550	948	63.61	1463/23	3600	3600	5500	4.0	1.9	2.0	70	21
54	83	87	12	3.4	PHQ531_0055K102_0100 EZ302U	260	260	423	55.77	5577/100	4000	4000	6000	4.0	0.51	2.0	70	18
54	108	114	15	2.6	PHQ531_0055K102_0100 EZ303U	312	312	423	55.77	5577/100	4000	4000	6000	4.0	0.62	2.0	70	18
54	145	156	21	1.9	PHQ531_0055K102_0100 EZ401U	441	441	948	55.77	5577/100	4000	4000	6000	4.0	1.2	2.0	70	20
54	223	244	32	1.3	PHQ531_0055K102_0100 EZ501U	550	550	948	55.77	5577/100	4000	4000	6000	4.0	3.1	2.0	70	21
54	244	270	35	1.1	PHQ531_0055K102_0100 EZ402U	550	550	948	55.77	5577/100	4000	4000	6000	4.0	1.9	2.0	70	21
59	75	80	11	3.7	PHQ531_0055K102_0092 EZ302U	237	237	386	50.87	9614/189	3600	3600	5500	4.0	0.63	2.0	70	18
59	98	104	15	2.9	PHQ531_0055K102_0092 EZ303U	284	284	386	50.87	9614/189	3600	3600	5500	4.0	0.74	2.0	70	18
59	133	142	20	2.1	PHQ531_0055K102_0092 EZ401U	403	403	948	50.87	9614/189	3600	3600	5500	4.0	1.3	2.0	70	20
59	204	223	31	1.4	PHQ531_0055K102_0092 EZ501U	550	550	948	50.87	9614/189	3600	3600	5500	4.0	3.2	2.0	70	21
59	223	246	34	1.3	PHQ531_0055K102_0092 EZ402U	550	550	948	50.87	9614/189	3600	3600	5500	4.0	2.0	2.0	70	21
66	68	71	12	3.8	PHQ531_0055K102_0083 EZ302U	213	213	346	45.70	21021/460	3600	3600	5500	4.0	0.59	2.0	70	18
66	88	93	16	2.9	PHQ531_0055K102_0083 EZ303U	255	255	346	45.70	21021/460	3600	3600	5500	4.0	0.70	2.0	70	18

n_{2N} [rpm]	M_{2N} [Nm]	$M_{2,0}$ [Nm]	a_{th}	S	Type	M_{2acc} [Nm]	M_{2accHT} [Nm]	M_{2NOT} [Nm]	i	i_{exakt}	n_{1maxDB} EL1,2 [rpm]	n_{1maxDB} EL3,4,5,6 [rpm]	n_{1maxZB} [rpm]	$\Delta\varphi_2$ [arc min]	J_1 [kgcm²]	$\Delta\varphi_{2red}$ [arc min]	C_2 [Nm/ arcmin]	m [kg]
PHQ531K (n_{1N} = 3000 min^{-1}, $M_{2acc,max}$ = 550 Nm)																		
66	119	128	20	2.4	PHQ531_0055K102_0083 EZ401U	362	362	948	45.70	21021/460	3600	3600	5500	4.0	1.2	2.0	70	20
66	183	200	30	1.5	PHQ531_0055K102_0083 EZ501U	550	550	948	45.70	21021/460	3600	3600	5500	4.0	3.2	2.0	70	21
66	200	221	33	1.4	PHQ531_0055K102_0083 EZ402U	550	550	948	45.70	21021/460	3600	3600	5500	4.0	1.9	2.0	70	21
82	54	57	14	3.8	PHQ531_0055K102_0066 EZ302U	170	170	277	36.54	3289/90	3600	3600	5500	4.0	0.71	2.0	70	18
82	70	75	19	2.9	PHQ531_0055K102_0066 EZ303U	204	204	277	36.54	3289/90	3600	3600	5500	4.0	0.82	2.0	70	18
82	95	102	18	2.9	PHQ531_0055K102_0066 EZ401U	289	289	948	36.54	3289/90	3600	3600	5500	4.0	1.4	2.0	70	20
82	146	160	28	1.9	PHQ531_0055K102_0066 EZ501U	544	544	948	36.54	3289/90	3600	3600	5500	4.0	3.3	2.0	70	21
82	160	177	31	1.8	PHQ531_0055K102_0066 EZ402U	544	544	948	36.54	3289/90	3600	3600	5500	4.0	2.1	2.0	70	21
82	235	293	46	1.2	PHQ531_0055K102_0066 EZ404U	550	550	948	36.54	3289/90	3600	3600	5500	4.0	3.4	2.0	70	23
82	252	272	49	1.1	PHQ531_0055K102_0066 EZ502U	550	550	948	36.54	3289/90	3600	3600	5500	4.0	5.6	2.0	70	22
82	252	282	49	1.1	PHQ531_0055K102_0066 EZ701U	550	550	948	36.54	3289/90	3600	3600	5500	4.0	8.9	2.0	70	24
91	86	92	18	3.3	PHQ531_0055K102_0060 EZ401U	261	261	948	33.00	33/1	3300	3300	5000	4.0	1.4	2.0	70	20
91	132	144	28	2.1	PHQ531_0055K102_0060 EZ501U	492	492	948	33.00	33/1	3300	3300	5000	4.0	3.4	2.0	70	21
91	144	160	30	1.9	PHQ531_0055K102_0060 EZ402U	492	492	948	33.00	33/1	3300	3300	5000	4.0	2.1	2.0	70	21
91	212	264	44	1.3	PHQ531_0055K102_0060 EZ404U	550	550	948	33.00	33/1	3300	3300	5000	4.0	3.5	2.0	70	23
91	227	246	48	1.2	PHQ531_0055K102_0060 EZ502U	550	550	948	33.00	33/1	3300	3300	5000	4.0	5.7	2.0	70	22
91	227	255	48	1.2	PHQ531_0055K102_0060 EZ701U	550	550	948	33.00	33/1	3300	3300	5000	4.0	9.0	2.0	70	24
98	45	48	16	3.8	PHQ531_0055K102_0056 EZ302U	143	143	232	30.62	8360/273	3300	3300	5000	4.0	0.97	2.0	70	18
98	59	62	21	2.9	PHQ531_0055K102_0056 EZ303U	171	171	232	30.62	8360/273	3300	3300	5000	4.0	1.1	2.0	70	18
98	80	86	18	3.5	PHQ531_0055K102_0056 EZ401U	242	242	929	30.62	8360/273	3300	3300	5000	4.0	1.6	2.0	70	20
98	123	134	27	2.3	PHQ531_0055K102_0056 EZ501U	456	456	929	30.62	8360/273	3300	3300	5000	4.0	3.6	2.0	70	21
98	134	148	30	2.1	PHQ531_0055K102_0056 EZ402U	456	456	929	30.62	8360/273	3300	3300	5000	4.0	2.3	2.0	70	21
98	197	245	44	1.4	PHQ531_0055K102_0056 EZ404U	550	550	929	30.62	8360/273	3300	3300	5000	4.0	3.7	2.0	70	23
98	211	228	47	1.3	PHQ531_0055K102_0056 EZ502U	550	550	929	30.62	8360/273	3300	3300	5000	4.0	5.9	2.0	70	22
98	211	237	47	1.3	PHQ531_0055K102_0056 EZ701U	550	550	929	30.62	8360/273	3300	3300	5000	4.0	9.2	2.0	70	24
98	277	317	61	1.0	PHQ531_0055K102_0056 EZ503U	550	550	929	30.62	8360/273	3300	3300	5000	4.0	8.3	2.0	70	24
136	42	45	27	2.9	PHQ531_0055K102_0040 EZ303U	123	123	167	22.00	22/1	3300	3300	5000	4.0	1.3	2.0	70	18
136	57	61	17	4.8	PHQ531_0055K102_0040 EZ401U	174	174	667	22.00	22/1	3300	3300	5000	4.0	1.8	2.0	70	20
136	88	96	26	3.1	PHQ531_0055K102_0040 EZ501U	328	328	667	22.00	22/1	3300	3300	5000	4.0	3.8	2.0	70	21
136	96	107	28	2.8	PHQ531_0055K102_0040 EZ402U	328	328	667	22.00	22/1	3300	3300	5000	4.0	2.5	2.0	70	21
136	141	176	41	1.9	PHQ531_0055K102_0040 EZ404U	492	492	667	22.00	22/1	3300	3300	5000	4.0	3.9	2.0	70	23
136	152	164	44	1.8	PHQ531_0055K102_0040 EZ502U	492	492	667	22.00	22/1	3300	3300	5000	4.0	6.1	2.0	70	22
136	152	170	44	1.8	PHQ531_0055K102_0040 EZ701U	410	410	667	22.00	22/1	3300	3300	5000	4.0	9.4	2.0	70	24
136	199	227	58	1.4	PHQ531_0055K102_0040 EZ503U	492	492	667	22.00	22/1	3300	3300	5000	4.0	8.5	2.0	70	24
PHQ531K (n_{1N} = 6000 min^{-1}, $M_{2acc,max}$ = 550 Nm)																		
19	256	273	10	1.1	PHQ531_0055K102_0560 EZ301U	542	542	948	308.5	6479/21	4000	4000	7000	4.0	0.21	2.0	70	17
22	229	245	10	1.2	PHQ531_0055K102_0500 EZ301U	316	316	572	276.7	55341/200	4000	4000	7000	4.0	0.21	2.0	70	17
23	214	228	9.6	1.3	PHQ531_0055K102_0470 EZ301U	550	550	948	258.0	25289/98	4000	4000	7000	4.0	0.22	2.0	70	17
27	184	196	9.2	1.5	PHQ531_0055K102_0400 EZ301U	389	389	704	221.7	4433/20	4000	4000	7000	4.0	0.21	2.0	70	17
31	160	171	8.9	1.8	PHQ531_0055K102_0350 EZ301U	503	503	948	193.1	20273/105	4000	4000	7000	4.0	0.23	2.0	70	17
31	270	302	15	1.0	PHQ531_0055K102_0350 EZ302U	550	550	948	193.1	20273/105	4000	4000	7000	4.0	0.33	2.0	70	18
32	154	164	8.8	1.8	PHQ531_0055K102_0340 EZ301U	462	462	836	185.4	51909/280	4000	4000	7000	4.0	0.22	2.0	70	17
32	259	290	15	1.1	PHQ531_0055K102_0340 EZ302U	462	462	836	185.4	51909/280	4000	4000	7000	4.0	0.32	2.0	70	18
39	128	136	8.4	2.2	PHQ531_0055K102_0280 EZ301U	402	402	948	154.3	6479/42	4000	4000	7000	4.0	0.26	2.0	70	17
39	215	241	14	1.3	PHQ531_0055K102_0280 EZ302U	550	550	948	154.3	6479/42	4000	4000	7000	4.0	0.36	2.0	70	18
43	115	123	8.2	2.4	PHQ531_0055K102_0250 EZ301U	362	362	806	138.7	13871/100	4000	4000	7000	4.0	0.24	2.0	70	17
43	194	217	14	1.4	PHQ531_0055K102_0250 EZ302U	550	550	806	138.7	13871/100	4000	4000	7000	4.0	0.34	2.0	70	18
43	253	291	18	1.1	PHQ531_0055K102_0250 EZ303U	550	550	806	138.7	13871/100	4000	4000	7000	4.0	0.45	2.0	70	18
47	106	113	8.0	2.6	PHQ531_0055K102_0230 EZ301U	334	334	911	128.0	6270/49	4000	4000	7000	4.0	0.28	2.0	70	17
47	179	200	14	1.6	PHQ531_0055K102_0230 EZ302U	550	550	911	128.0	6270/49	4000	4000	7000	4.0	0.38	2.0	70	18
47	234	268	18	1.2	PHQ531_0055K102_0230 EZ303U	550	550	911	128.0	6270/49	4000	4000	7000	4.0	0.49	2.0	70	18
47	274	334	21	1.0	PHQ531_0055K102_0230 EZ401U	550	550	948	128.0	6270/49	4000	4000	7000	4.0	1.0	2.0	70	20
54	92	98	7.8	3.0	PHQ531_0055K102_0200 EZ301U	289	289	694	110.8	4433/40	4000	4000	7000	4.0	0.26	2.0	70	17
54	155	173	13	1.8	PHQ531_0055K102_0200 EZ302U	512	512	694	110.8	4433/40	4000	4000	7000	4.0	0.36	2.0	70	18
54	202	232	17	1.4	PHQ531_0055K102_0200 EZ303U	512	512	694	110.8	4433/40	4000	4000	7000	4.0	0.47	2.0	70	18
54	237	289	20	1.2	PHQ531_0055K102_0200 EZ401U	550	550	948	110.8	4433/40	4000	4000	7000	4.0	1.0	2.0	70	20
62	80	85	7.5	3.5	PHQ531_0055K102_0175 EZ301U	252	252	732	96.60	11495/119	4000	4000	6000	4.0	0.32	2.0	70	17
62	135	151	13	2.1	PHQ531_0055K102_0175 EZ302U	450	450	732	96.60	11495/119	4000	4000	6000	4.0	0.42	2.0	70	18
62	176	202	17	1.6	PHQ531_0055K102_0175 EZ303U	540	540	732	96.60	11495/119	4000	4000	6000	4.0	0.53	2.0	70	18
62	207	252	19	1.4	PHQ531_0055K102_0175 EZ401U	550	550	948	96.60	11495/119	4000	4000	6000	4.0	1.1	2.0	70	20
65	76	81	7.4	3.7	PHQ531_0055K102_0165 EZ301U	240	240	655	91.93	1287/14	4000	4000	7000	4.0	0.29	2.0	70	17
65	128	144	12	2.2	PHQ531_0055K102_0165 EZ302U	428	428	655	91.93	1287/14	4000	4000	7000	4.0	0.39	2.0	70	18
65	168	193	16	1.7	PHQ531_0055K102_0165 EZ303U	483	483	655	91.93	1287/14	4000	4000	7000	4.0	0.50	2.0	70	18
65	197	240	19	1.4	PHQ531_0055K102_0165 EZ401U	550	550	948	91.93	1287/14	4000	4000	7000	4.0	1.0	2.0	70	20

n_{2N} [rpm]	M_{2N} [Nm]	$M_{2,0}$ [Nm]	a_{th}	S	Type	M_{2acc} [Nm]	M_{2accHT} [Nm]	M_{2NOT} [Nm]	i	i_{exakt}	n_{1maxDB} EL1,2 [rpm]	n_{1maxDB} EL3,4,5,6 [rpm]	n_{1maxZB} [rpm]	$\Delta\varphi_2$ [arc min]	J_1 [kgcm²]	$\Delta\varphi_{2red}$ [arc min]	C_2 [Nm/ arcmin]	m [kg]
PHQ531K (n_{1N} = 6000 min^{-1}, $M_{2acc,max}$ = 550 Nm)																		
77	64	69	7.1	4.4	PHQ531_0055K102_0140 EZ301U	202	202	588	77.63	2717/35	4000	4000	6000	4.0	0.37	2.0	70	17
77	108	121	12	2.6	PHQ531_0055K102_0140 EZ302U	361	361	588	77.63	2717/35	4000	4000	6000	4.0	0.47	2.0	70	18
77	142	163	16	2.0	PHQ531_0055K102_0140 EZ303U	434	434	588	77.63	2717/35	4000	4000	6000	4.0	0.58	2.0	70	18
77	166	202	18	1.7	PHQ531_0055K102_0140 EZ401U	550	550	948	77.63	2717/35	4000	4000	6000	4.0	1.1	2.0	70	20
77	246	318	27	1.1	PHQ531_0055K102_0140 EZ501U	550	550	948	77.63	2717/35	4000	4000	6000	4.0	3.1	2.0	70	21
77	253	354	28	1.1	PHQ531_0055K102_0140 EZ402U	550	550	948	77.63	2717/35	4000	4000	6000	4.0	1.8	2.0	70	21
86	97	109	12	2.9	PHQ531_0055K102_0125 EZ302U	323	323	526	69.40	4719/68	4000	4000	6000	4.0	0.45	2.0	70	18
86	127	145	15	2.2	PHQ531_0055K102_0125 EZ303U	388	388	526	69.40	4719/68	4000	4000	6000	4.0	0.56	2.0	70	18
86	149	181	18	1.9	PHQ531_0055K102_0125 EZ401U	549	549	948	69.40	4719/68	4000	4000	6000	4.0	1.1	2.0	70	20
86	220	284	26	1.3	PHQ531_0055K102_0125 EZ501U	550	550	948	69.40	4719/68	4000	4000	6000	4.0	3.1	2.0	70	21
86	226	317	27	1.2	PHQ531_0055K102_0125 EZ402U	550	550	948	69.40	4719/68	4000	4000	6000	4.0	1.8	2.0	70	21
108	78	87	11	3.6	PHQ531_0055K102_0100 EZ302U	260	260	423	55.77	5577/100	4000	4000	6000	4.0	0.51	2.0	70	18
108	102	117	14	2.8	PHQ531_0055K102_0100 EZ303U	312	312	423	55.77	5577/100	4000	4000	6000	4.0	0.62	2.0	70	18
108	119	145	17	2.3	PHQ531_0055K102_0100 EZ401U	441	441	948	55.77	5577/100	4000	4000	6000	4.0	1.2	2.0	70	20
108	177	229	25	1.6	PHQ531_0055K102_0100 EZ501U	550	550	948	55.77	5577/100	4000	4000	6000	4.0	3.1	2.0	70	21
108	182	254	26	1.5	PHQ531_0055K102_0100 EZ402U	550	550	948	55.77	5577/100	4000	4000	6000	4.0	1.9	2.0	70	21
108	270	405	38	1.0	PHQ531_0055K102_0100 EZ502U	550	550	948	55.77	5577/100	4000	4000	6000	4.0	5.4	2.0	70	22
108	270	410	38	1.0	PHQ531_0055K102_0100 EZ701U	550	550	948	55.77	5577/100	4000	4000	6000	4.0	8.7	2.0	70	24
PHQ731K (n_{1N} = 3000 min^{-1}, $M_{2acc,max}$ = 1050 Nm)																		
9.8	452	478	11	1.1	PHQ731_0055K202_0560 EZ302U	1006	1006	1548	305.5	14663/48	4000	4000	6500	4.0	0.34	2.0	136	30
11	411	434	11	1.2	PHQ731_0055K202_0500 EZ302U	610	610	1055	277.7	6665/24	4000	4000	6500	4.0	0.33	2.0	136	30
12	376	398	11	1.3	PHQ731_0055K202_0460 EZ302U	1050	1050	1477	254.2	20339/80	4000	4000	6500	4.0	0.36	2.0	136	30
12	490	518	14	1.0	PHQ731_0055K202_0460 EZ303U	1050	1050	1477	254.2	20339/80	4000	4000	6500	4.0	0.47	2.0	136	31
14	329	348	10	1.5	PHQ731_0055K202_0400 EZ302U	732	732	1126	222.2	1333/6	4000	4000	6500	4.0	0.35	2.0	136	30
14	428	453	13	1.2	PHQ731_0055K202_0400 EZ303U	732	732	1126	222.2	1333/6	4000	4000	6500	4.0	0.46	2.0	136	31
16	281	297	9.9	1.8	PHQ731_0055K202_0350 EZ302U	885	885	1228	190.0	21285/112	4000	4000	6500	4.0	0.41	2.0	136	30
16	366	388	13	1.4	PHQ731_0055K202_0350 EZ303U	905	905	1228	190.0	21285/112	4000	4000	6500	4.0	0.52	2.0	136	31
16	496	531	17	1.0	PHQ731_0055K202_0350 EZ401U	1050	1050	2100	190.0	21285/112	4000	4000	6500	4.0	1.1	2.0	136	32
16	274	289	9.8	1.8	PHQ731_0055K202_0340 EZ302U	792	792	1074	184.9	1849/10	4000	4000	6500	4.0	0.37	2.0	136	30
16	356	377	13	1.4	PHQ731_0055K202_0340 EZ303U	792	792	1074	184.9	1849/10	4000	4000	6500	4.0	0.48	2.0	136	31
16	482	517	17	1.0	PHQ731_0055K202_0340 EZ401U	976	976	1765	184.9	1849/10	4000	4000	6500	4.0	1.0	2.0	136	32
20	401	429	16	1.2	PHQ731_0055K202_0280 EZ401U	1050	1050	2100	153.7	6149/40	4000	4000	6500	4.0	1.1	2.0	136	32
22	205	216	9.1	2.4	PHQ731_0055K202_0250 EZ302U	644	644	893	138.2	1935/14	4000	4000	6500	4.0	0.43	2.0	136	30
22	266	282	12	1.9	PHQ731_0055K202_0250 EZ303U	658	658	893	138.2	1935/14	4000	4000	6500	4.0	0.54	2.0	136	31
22	360	386	16	1.4	PHQ731_0055K202_0250 EZ401U	1050	1050	2100	138.2	1935/14	4000	4000	6500	4.0	1.1	2.0	136	32
24	189	199	8.9	2.6	PHQ731_0055K202_0230 EZ302U	594	594	966	127.5	32637/256	4000	4000	6500	4.0	0.53	2.0	136	30
24	246	260	12	2.0	PHQ731_0055K202_0230 EZ303U	713	713	966	127.5	32637/256	4000	4000	6500	4.0	0.64	2.0	136	31
24	332	356	16	1.5	PHQ731_0055K202_0230 EZ401U	1009	1009	2100	127.5	32637/256	4000	4000	6500	4.0	1.2	2.0	136	32
27	291	312	15	1.7	PHQ731_0055K202_0200 EZ401U	885	885	2100	111.8	559/5	4000	4000	6500	4.0	1.1	2.0	136	32
27	448	489	23	1.1	PHQ731_0055K202_0200 EZ501U	1050	1050	2100	111.8	559/5	4000	4000	6500	4.0	3.1	2.0	136	33
27	489	541	26	1.0	PHQ731_0055K202_0200 EZ402U	1050	1050	2100	111.8	559/5	4000	4000	6500	4.0	1.8	2.0	136	33
31	142	150	8.3	3.5	PHQ731_0055K202_0175 EZ302U	447	447	728	96.08	6149/64	3900	3900	5500	4.0	0.66	2.0	136	30
31	185	196	11	2.7	PHQ731_0055K202_0175 EZ303U	537	537	728	96.08	6149/64	3900	3900	5500	4.0	0.77	2.0	136	31
31	251	268	15	2.0	PHQ731_0055K202_0175 EZ401U	760	760	2100	96.08	6149/64	3900	3900	5500	4.0	1.3	2.0	136	32
31	385	421	23	1.3	PHQ731_0055K202_0175 EZ501U	1050	1050	2100	96.08	6149/64	3900	3900	5500	4.0	3.3	2.0	136	33
31	421	465	25	1.2	PHQ731_0055K202_0175 EZ402U	1050	1050	2100	96.08	6149/64	3900	3900	5500	4.0	2.0	2.0	136	33
32	137	145	8.3	3.6	PHQ731_0055K202_0170 EZ302U	432	432	703	92.72	2967/32	4000	4000	6500	4.0	0.56	2.0	136	30
32	179	189	11	2.8	PHQ731_0055K202_0170 EZ303U	518	518	703	92.72	2967/32	4000	4000	6500	4.0	0.67	2.0	136	31
32	242	259	15	2.1	PHQ731_0055K202_0170 EZ401U	734	734	2100	92.72	2967/32	4000	4000	6500	4.0	1.2	2.0	136	32
32	371	406	22	1.3	PHQ731_0055K202_0170 EZ501U	1050	1050	2100	92.72	2967/32	4000	4000	6500	4.0	3.2	2.0	136	33
32	406	449	24	1.2	PHQ731_0055K202_0170 EZ402U	1050	1050	2100	92.72	2967/32	4000	4000	6500	4.0	1.9	2.0	136	33
39	199	213	14	2.5	PHQ731_0055K202_0140 EZ401U	603	603	2100	76.18	31691/416	3900	3900	5500	4.0	1.4	2.0	136	32
39	305	333	21	1.6	PHQ731_0055K202_0140 EZ501U	1050	1050	2100	76.18	31691/416	3900	3900	5500	4.0	3.4	2.0	136	33
39	333	369	23	1.5	PHQ731_0055K202_0140 EZ402U	1050	1050	2100	76.18	31691/416	3900	3900	5500	4.0	2.1	2.0	136	33
39	489	610	34	1.0	PHQ731_0055K202_0140 EZ404U	1050	1050	2100	76.18	31691/416	3900	3900	5500	4.0	3.5	2.0	136	35
43	103	109	9.8	3.8	PHQ731_0055K202_0125 EZ302U	325	325	530	69.88	559/8	3900	3900	5500	4.0	0.71	2.0	136	30
43	135	143	13	2.9	PHQ731_0055K202_0125 EZ303U	390	390	530	69.88	559/8	3900	3900	5500	4.0	0.82	2.0	136	31
43	182	195	14	2.7	PHQ731_0055K202_0125 EZ401U	553	553	2100	69.88	559/8	3900	3900	5500	4.0	1.4	2.0	136	32
43	280	306	21	1.8	PHQ731_0055K202_0125 EZ501U	1041	1041	2100	69.88	559/8	3900	3900	5500	4.0	3.3	2.0	136	33
43	306	338	23	1.6	PHQ731_0055K202_0125 EZ402U	1041	1041	2100	69.88	559/8	3900	3900	5500	4.0	2.1	2.0	136	33
43	449	560	33	1.1	PHQ731_0055K202_0125 EZ404U	1050	1050	2100	69.88	559/8	3900	3900	5500	4.0	3.4	2.0	136	35
43	482	521	36	1.0	PHQ731_0055K202_0125 EZ502U	1050	1050	2100	69.88	559/8	3900	3900	5500	4.0	5.6	2.0	136	35
43	482	540	36	1.0	PHQ731_0055K202_0125 EZ701U	1050	1050	2100	69.88	559/8	3900	3900	5500	4.0	8.9	2.0	136	37
47	94	99	11	3.8	PHQ731_0055K202_0115 EZ302U	296	296	481	63.50	13717/216	3500	3500	5000	4.0	0.97	2.0	136	30

n_{2N} [rpm]	M_{2N} [Nm]	$M_{2,0}$ [Nm]	a_{th}	S	Type	M_{2acc} [Nm]	M_{2accHT} [Nm]	M_{2NOT} [Nm]	i	i_{exakt}	n_{1maxDB} EL1,2 [rpm]	n_{1maxDB} EL3,4,5,6 [rpm]	n_{1maxZB} [rpm]	$\Delta\varphi_2$ [arc min]	J_1 [kgcm²]	$\Delta\varphi_{2red}$ [arc min]	C_2 [Nm/ arcmin]	m [kg]
PHQ731K (n_{1N} = 3000 min^{-1}, $M_{2acc,max}$ = 1050 Nm)																		
47	122	130	14	2.9	PHQ731_0055K202_0115 EZ303U	355	355	481	63.50	13717/216	3500	3500	5000	4.0	1.1	2.0	136	31
47	166	177	13	3.0	PHQ731_0055K202_0115 EZ401U	503	503	1925	63.50	13717/216	3500	3500	5000	4.0	1.6	2.0	136	32
47	254	278	20	2.0	PHQ731_0055K202_0115 EZ501U	946	946	1925	63.50	13717/216	3500	3500	5000	4.0	3.6	2.0	136	33
47	278	307	22	1.8	PHQ731_0055K202_0115 EZ402U	946	946	1925	63.50	13717/216	3500	3500	5000	4.0	2.3	2.0	136	33
47	408	509	33	1.2	PHQ731_0055K202_0115 EZ404U	1050	1050	1925	63.50	13717/216	3500	3500	5000	4.0	3.7	2.0	136	35
47	438	473	35	1.1	PHQ731_0055K202_0115 EZ502U	1050	1050	1925	63.50	13717/216	3500	3500	5000	4.0	5.9	2.0	136	35
47	438	491	35	1.1	PHQ731_0055K202_0115 EZ701U	1050	1050	2100	63.50	13717/216	3500	3500	5000	4.0	9.2	2.0	136	37
54	144	155	13	3.5	PHQ731_0055K202_0100 EZ401U	439	439	1680	55.40	2881/52	3900	3900	5500	4.0	1.5	2.0	136	32
54	222	242	20	2.3	PHQ731_0055K202_0100 EZ501U	825	825	1680	55.40	2881/52	3900	3900	5500	4.0	3.5	2.0	136	33
54	242	268	21	2.1	PHQ731_0055K202_0100 EZ402U	825	825	1680	55.40	2881/52	3900	3900	5500	4.0	2.2	2.0	136	33
54	356	444	31	1.4	PHQ731_0055K202_0100 EZ404U	1050	1050	1680	55.40	2881/52	3900	3900	5500	4.0	3.6	2.0	136	35
54	382	413	34	1.3	PHQ731_0055K202_0100 EZ502U	1050	1050	1680	55.40	2881/52	3900	3900	5500	4.0	5.8	2.0	136	35
54	382	428	34	1.3	PHQ731_0055K202_0100 EZ701U	1032	1032	2100	55.40	2881/52	3900	3900	5500	4.0	9.1	2.0	136	37
59	132	141	12	3.8	PHQ731_0055K202_0092 EZ401U	400	400	1533	50.55	25069/496	3500	3500	5000	4.0	1.9	2.0	136	32
59	202	221	19	2.5	PHQ731_0055K202_0092 EZ501U	753	753	1533	50.55	25069/496	3500	3500	5000	4.0	3.8	2.0	136	33
59	221	245	21	2.3	PHQ731_0055K202_0092 EZ402U	753	753	1533	50.55	25069/496	3500	3500	5000	4.0	2.6	2.0	136	33
59	325	405	31	1.5	PHQ731_0055K202_0092 EZ404U	1050	1050	1533	50.55	25069/496	3500	3500	5000	4.0	3.9	2.0	136	35
59	348	377	33	1.4	PHQ731_0055K202_0092 EZ502U	1050	1050	1533	50.55	25069/496	3500	3500	5000	4.0	6.1	2.0	136	35
59	348	391	33	1.4	PHQ731_0055K202_0092 EZ701U	941	941	2100	50.55	25069/496	3500	3500	5000	4.0	9.4	2.0	136	37
59	457	522	43	1.1	PHQ731_0055K202_0092 EZ503U	1050	1050	1533	50.55	25069/496	3500	3500	5000	4.0	8.5	2.0	136	36
65	89	94	17	2.9	PHQ731_0055K202_0084 EZ303U	258	258	350	46.18	1247/27	3500	3500	5000	4.0	1.2	2.0	136	31
65	120	129	12	4.2	PHQ731_0055K202_0084 EZ401U	366	366	1400	46.18	1247/27	3500	3500	5000	4.0	1.7	2.0	136	32
65	185	202	19	2.7	PHQ731_0055K202_0084 EZ501U	688	688	1400	46.18	1247/27	3500	3500	5000	4.0	3.7	2.0	136	33
65	202	224	20	2.5	PHQ731_0055K202_0084 EZ402U	688	688	1400	46.18	1247/27	3500	3500	5000	4.0	2.4	2.0	136	33
65	297	370	30	1.7	PHQ731_0055K202_0084 EZ404U	1032	1032	1400	46.18	1247/27	3500	3500	5000	4.0	3.8	2.0	136	35
65	318	344	32	1.6	PHQ731_0055K202_0084 EZ502U	1032	1032	1400	46.18	1247/27	3500	3500	5000	4.0	6.0	2.0	136	35
65	318	357	32	1.6	PHQ731_0055K202_0084 EZ701U	860	860	2100	46.18	1247/27	3500	3500	5000	4.0	9.3	2.0	136	37
65	417	477	42	1.2	PHQ731_0055K202_0084 EZ503U	1032	1032	1400	46.18	1247/27	3500	3500	5000	4.0	8.4	2.0	136	36
77	270	303	31	1.9	PHQ731_0055K202_0071 EZ701U	729	729	2100	39.15	23177/592	3000	3000	4500	4.0	9.9	2.0	136	37
77	437	525	50	1.1	PHQ731_0055K202_0071 EZ702U	1050	1050	2100	39.15	23177/592	3000	3000	4500	4.0	15	2.0	136	39
77	492	583	56	1.0	PHQ731_0055K202_0071 EZ505U	1050	1050	2100	39.15	23177/592	3000	3000	4500	4.0	14	2.0	136	39
82	147	161	18	3.4	PHQ731_0055K202_0067 EZ501U	548	548	1115	36.76	2279/62	3500	3500	5000	4.0	4.0	2.0	136	33
82	161	178	19	3.1	PHQ731_0055K202_0067 EZ402U	548	548	1115	36.76	2279/62	3500	3500	5000	4.0	2.8	2.0	136	33
82	236	294	28	2.1	PHQ731_0055K202_0067 EZ404U	822	822	1115	36.76	2279/62	3500	3500	5000	4.0	4.1	2.0	136	35
82	253	274	30	2.0	PHQ731_0055K202_0067 EZ502U	822	822	1115	36.76	2279/62	3500	3500	5000	4.0	6.3	2.0	136	35
82	253	284	30	2.0	PHQ731_0055K202_0067 EZ701U	685	685	2100	36.76	2279/62	3500	3500	5000	4.0	9.6	2.0	136	37
82	332	380	40	1.5	PHQ731_0055K202_0067 EZ503U	822	822	1115	36.76	2279/62	3500	3500	5000	4.0	8.7	2.0	136	36
82	411	493	49	1.2	PHQ731_0055K202_0067 EZ702U	1050	1050	2100	36.76	2279/62	3500	3500	5000	4.0	15	2.0	136	39
82	462	548	56	1.1	PHQ731_0055K202_0067 EZ505U	1050	1050	2100	36.76	2279/62	3500	3500	5000	4.0	13	2.0	136	39
91	132	144	17	3.8	PHQ731_0055K202_0060 EZ501U	492	492	1000	33.00	33/1	3000	3000	4500	4.0	4.7	2.0	136	33
91	144	160	19	3.5	PHQ731_0055K202_0060 EZ402U	492	492	1000	33.00	33/1	3000	3000	4500	4.0	3.4	2.0	136	33
91	212	264	28	2.4	PHQ731_0055K202_0060 EZ404U	737	737	1000	33.00	33/1	3000	3000	4500	4.0	4.7	2.0	136	35
91	227	246	30	2.2	PHQ731_0055K202_0060 EZ502U	737	737	1000	33.00	33/1	3000	3000	4500	4.0	7.0	2.0	136	35
91	227	255	30	2.2	PHQ731_0055K202_0060 EZ701U	615	615	2100	33.00	33/1	3000	3000	4500	4.0	10	2.0	136	37
91	298	341	39	1.7	PHQ731_0055K202_0060 EZ503U	737	737	1000	33.00	33/1	3000	3000	4500	4.0	9.3	2.0	136	36
91	369	443	48	1.4	PHQ731_0055K202_0060 EZ702U	1050	1050	2100	33.00	33/1	3000	3000	4500	4.0	15	2.0	136	39
91	415	492	54	1.2	PHQ731_0055K202_0060 EZ505U	1050	1050	2100	33.00	33/1	3000	3000	4500	4.0	14	2.0	136	39
105	196	220	29	2.5	PHQ731_0055K202_0052 EZ701U	530	530	2100	28.47	2107/74	3000	3000	4500	4.0	10	2.0	136	37
105	318	382	46	1.6	PHQ731_0055K202_0052 EZ702U	1004	1004	2100	28.47	2107/74	3000	3000	4500	4.0	15	2.0	136	39
105	358	424	52	1.4	PHQ731_0055K202_0052 EZ505U	1004	1004	2100	28.47	2107/74	3000	3000	4500	4.0	14	2.0	136	39
105	437	552	64	1.1	PHQ731_0055K202_0052 EZ703U	1004	1004	2100	28.47	2107/74	3000	3000	4500	4.0	23	2.0	136	41
125	105	116	17	4.8	PHQ731_0055K202_0044 EZ402U	358	358	727	24.00	24/1	3000	3000	4500	4.0	3.8	2.0	136	33
125	154	192	26	3.2	PHQ731_0055K202_0044 EZ404U	536	536	727	24.00	24/1	3000	3000	4500	4.0	5.2	2.0	136	35
125	165	179	27	3.0	PHQ731_0055K202_0044 EZ502U	536	536	727	24.00	24/1	3000	3000	4500	4.0	7.4	2.0	136	35
125	165	186	27	3.0	PHQ731_0055K202_0044 EZ701U	447	447	1819	24.00	24/1	3000	3000	4500	4.0	11	2.0	136	37
125	217	248	36	2.3	PHQ731_0055K202_0044 EZ503U	536	536	727	24.00	24/1	3000	3000	4500	4.0	9.8	2.0	136	36
125	268	322	44	1.9	PHQ731_0055K202_0044 EZ702U	916	916	1819	24.00	24/1	3000	3000	4500	4.0	16	2.0	136	39
125	302	358	50	1.7	PHQ731_0055K202_0044 EZ505U	948	948	1819	24.00	24/1	3000	3000	4500	4.0	14	2.0	136	39
125	369	465	61	1.4	PHQ731_0055K202_0044 EZ703U	948	948	1819	24.00	24/1	3000	3000	4500	4.0	24	2.0	136	41
136	152	170	27	3.2	PHQ731_0055K202_0040 EZ701U	410	410	1667	22.00	22/1	3000	3000	4500	4.0	11	2.0	136	37
136	246	295	45	2.0	PHQ731_0055K202_0040 EZ702U	840	840	1667	22.00	22/1	3000	3000	4500	4.0	16	2.0	136	39
136	277	328	50	1.8	PHQ731_0055K202_0040 EZ505U	921	921	1667	22.00	22/1	3000	3000	4500	4.0	15	2.0	136	39
136	338	426	61	1.4	PHQ731_0055K202_0040 EZ703U	921	921	1667	22.00	22/1	3000	3000	4500	4.0	24	2.0	136	41

n_{2N} [rpm]	M_{2N} [Nm]	$M_{2,0}$ [Nm]	a_{th}	S	Type	M_{2acc} [Nm]	M_{2accHT} [Nm]	M_{2NOT} [Nm]	i	i_{exakt}	n_{1maxDB} EL1,2 [rpm]	n_{1maxDB} EL3,4,5,6 [rpm]	n_{1maxZB} [rpm]	$\Delta\varphi_2$ [arc min]	J_1 [kgcm²]	$\Delta\varphi_{2red}$ [arc min]	C_2 [Nm/ arcmin]	m [kg]
PHQ731K (n_{1N} = 4500 min^{-1}, $M_{2acc,max}$ = 1050 Nm)																		
81	490	789	43	1.0	PHQ731_0055K202_0100 EZ505U	1050	1050	2100	55.40	2881/52	3900	3900	5500	4.0	13	2.0	136	39
89	447	720	42	1.1	PHQ731_0055K202_0092 EZ505U	1050	1050	2100	50.55	25069/496	3500	3500	5000	4.0	13	2.0	136	39
97	409	658	41	1.2	PHQ731_0055K202_0084 EZ505U	1050	1050	2100	46.18	1247/27	3500	3500	5000	4.0	13	2.0	136	39
115	346	558	40	1.4	PHQ731_0055K202_0071 EZ505U	1050	1050	2100	39.15	23177/592	3000	3000	4500	4.0	14	2.0	136	39
115	441	729	51	1.1	PHQ731_0055K202_0071 EZ703U	1050	1050	2100	39.15	23177/592	3000	3000	4500	4.0	23	2.0	136	41
122	325	524	39	1.5	PHQ731_0055K202_0067 EZ505U	1050	1050	2100	36.76	2279/62	3500	3500	5000	4.0	13	2.0	136	39
122	414	685	50	1.2	PHQ731_0055K202_0067 EZ703U	1050	1050	2100	36.76	2279/62	3500	3500	5000	4.0	23	2.0	136	41
136	292	470	39	1.7	PHQ731_0055K202_0060 EZ505U	1050	1050	2100	33.00	33/1	3000	3000	4500	4.0	14	2.0	136	39
136	372	615	50	1.3	PHQ731_0055K202_0060 EZ703U	1050	1050	2100	33.00	33/1	3000	3000	4500	4.0	23	2.0	136	41
158	252	406	40	1.8	PHQ731_0055K202_0052 EZ505U	1004	1004	2100	28.47	2107/74	3000	3000	4500	4.0	14	2.0	136	39
158	321	530	50	1.4	PHQ731_0055K202_0052 EZ703U	1004	1004	2100	28.47	2107/74	3000	3000	4500	4.0	23	2.0	136	41
187	212	342	40	2.1	PHQ731_0055K202_0044 EZ505U	948	948	1819	24.00	24/1	3000	3000	4500	4.0	14	2.0	136	39
187	270	447	51	1.6	PHQ731_0055K202_0044 EZ703U	948	948	1819	24.00	24/1	3000	3000	4500	4.0	24	2.0	136	41
205	195	313	40	2.2	PHQ731_0055K202_0040 EZ505U	921	921	1667	22.00	22/1	3000	3000	4500	4.0	15	2.0	136	39
205	248	410	51	1.7	PHQ731_0055K202_0040 EZ703U	921	921	1667	22.00	22/1	3000	3000	4500	4.0	24	2.0	136	41
PHQ731K (n_{1N} = 6000 min^{-1}, $M_{2acc,max}$ = 1050 Nm)																		
20	427	478	10	1.2	PHQ731_0055K202_0560 EZ302U	1006	1006	1548	305.5	14663/48	4000	4000	6500	4.0	0.34	2.0	136	30
22	388	434	10	1.3	PHQ731_0055K202_0500 EZ302U	610	610	1055	277.7	6665/24	4000	4000	6500	4.0	0.33	2.0	136	30
24	355	398	10	1.4	PHQ731_0055K202_0460 EZ302U	1050	1050	1477	254.2	20339/80	4000	4000	6500	4.0	0.36	2.0	136	30
24	464	533	13	1.1	PHQ731_0055K202_0460 EZ303U	1050	1050	1477	254.2	20339/80	4000	4000	6500	4.0	0.47	2.0	136	31
27	310	348	9.7	1.6	PHQ731_0055K202_0400 EZ302U	732	732	1126	222.2	1333/6	4000	4000	6500	4.0	0.35	2.0	136	30
27	405	465	13	1.2	PHQ731_0055K202_0400 EZ303U	732	732	1126	222.2	1333/6	4000	4000	6500	4.0	0.46	2.0	136	31
27	476	579	15	1.1	PHQ731_0055K202_0400 EZ401U	732	732	1126	222.2	1333/6	4000	4000	6500	4.0	0.99	2.0	136	32
32	265	297	9.3	1.9	PHQ731_0055K202_0350 EZ302U	885	885	1228	190.0	21285/112	4000	4000	6500	4.0	0.41	2.0	136	30
32	347	398	12	1.4	PHQ731_0055K202_0350 EZ303U	905	905	1228	190.0	21285/112	4000	4000	6500	4.0	0.52	2.0	136	31
32	407	496	14	1.2	PHQ731_0055K202_0350 EZ401U	1050	1050	2100	190.0	21285/112	4000	4000	6500	4.0	1.1	2.0	136	32
32	258	289	9.2	1.9	PHQ731_0055K202_0340 EZ302U	792	792	1074	184.9	1849/10	4000	4000	6500	4.0	0.37	2.0	136	30
32	337	387	12	1.5	PHQ731_0055K202_0340 EZ303U	792	792	1074	184.9	1849/10	4000	4000	6500	4.0	0.48	2.0	136	31
32	396	482	14	1.3	PHQ731_0055K202_0340 EZ401U	976	976	1765	184.9	1849/10	4000	4000	6500	4.0	1.0	2.0	136	32
39	329	401	14	1.5	PHQ731_0055K202_0280 EZ401U	1050	1050	2100	153.7	6149/40	4000	4000	6500	4.0	1.1	2.0	136	32
39	487	630	20	1.0	PHQ731_0055K202_0280 EZ501U	1050	1050	2100	153.7	6149/40	4000	4000	6500	4.0	3.1	2.0	136	33
43	193	216	8.6	2.6	PHQ731_0055K202_0250 EZ302U	644	644	893	138.2	1935/14	4000	4000	6500	4.0	0.43	2.0	136	30
43	252	290	11	2.0	PHQ731_0055K202_0250 EZ303U	658	658	893	138.2	1935/14	4000	4000	6500	4.0	0.54	2.0	136	31
43	296	360	13	1.7	PHQ731_0055K202_0250 EZ401U	1050	1050	2100	138.2	1935/14	4000	4000	6500	4.0	1.1	2.0	136	32
43	438	566	19	1.1	PHQ731_0055K202_0250 EZ501U	1050	1050	2100	138.2	1935/14	4000	4000	6500	4.0	3.0	2.0	136	33
43	450	631	20	1.1	PHQ731_0055K202_0250 EZ402U	1050	1050	2100	138.2	1935/14	4000	4000	6500	4.0	1.8	2.0	136	33
47	178	199	8.4	2.8	PHQ731_0055K202_0230 EZ302U	594	594	966	127.5	32637/256	4000	4000	6500	4.0	0.53	2.0	136	30
47	233	267	11	2.1	PHQ731_0055K202_0230 EZ303U	713	713	966	127.5	32637/256	4000	4000	6500	4.0	0.64	2.0	136	31
47	273	332	13	1.8	PHQ731_0055K202_0230 EZ401U	1009	1009	2100	127.5	32637/256	4000	4000	6500	4.0	1.2	2.0	136	32
47	404	522	19	1.2	PHQ731_0055K202_0230 EZ501U	1050	1050	2100	127.5	32637/256	4000	4000	6500	4.0	3.1	2.0	136	33
47	416	582	20	1.2	PHQ731_0055K202_0230 EZ402U	1050	1050	2100	127.5	32637/256	4000	4000	6500	4.0	1.9	2.0	136	33
54	239	291	13	2.1	PHQ731_0055K202_0200 EZ401U	885	885	2100	111.8	559/5	4000	4000	6500	4.0	1.1	2.0	136	32
54	354	458	18	1.4	PHQ731_0055K202_0200 EZ501U	1050	1050	2100	111.8	559/5	4000	4000	6500	4.0	3.1	2.0	136	33
54	364	510	19	1.4	PHQ731_0055K202_0200 EZ402U	1050	1050	2100	111.8	559/5	4000	4000	6500	4.0	1.8	2.0	136	33
65	130	145	7.8	3.9	PHQ731_0055K202_0170 EZ302U	432	432	703	92.72	2967/32	4000	4000	6500	4.0	0.56	2.0	136	30
65	169	194	10	3.0	PHQ731_0055K202_0170 EZ303U	518	518	703	92.72	2967/32	4000	4000	6500	4.0	0.67	2.0	136	31
65	199	242	12	2.5	PHQ731_0055K202_0170 EZ401U	734	734	2100	92.72	2967/32	4000	4000	6500	4.0	1.2	2.0	136	32
65	294	380	18	1.7	PHQ731_0055K202_0170 EZ501U	1050	1050	2100	92.72	2967/32	4000	4000	6500	4.0	3.2	2.0	136	33
65	302	423	18	1.7	PHQ731_0055K202_0170 EZ402U	1050	1050	2100	92.72	2967/32	4000	4000	6500	4.0	1.9	2.0	136	33
65	449	673	27	1.1	PHQ731_0055K202_0170 EZ502U	1050	1050	2100	92.72	2967/32	4000	4000	6500	4.0	5.5	2.0	136	35
65	449	682	27	1.1	PHQ731_0055K202_0170 EZ701U	1050	1050	2100	92.72	2967/32	4000	4000	6500	4.0	8.8	2.0	136	37
PHQ831K (n_{1N} = 2000 min^{-1}, $M_{2acc,max}$ = 2800 Nm)																		
54	1342	1505	69	1.0	PHQ831_0055K402_0067 EZ813U	2800	2878	4964	36.95	2365/64	3000	3000	4500	3.5	109	1.5	400	101
61	1198	1344	67	1.2	PHQ831_0055K402_0060 EZ813U	2772	2772	4964	33.00	33/1	2600	2600	3800	3.5	112	1.5	400	101
67	1083	1214	65	1.3	PHQ831_0055K402_0054 EZ813U	2680	2680	4964	29.82	1849/62	2600	2600	3800	3.5	111	1.5	400	101
83	871	977	62	1.6	PHQ831_0055K402_0044 EZ813U	2493	2493	4850	24.00	24/1	2600	2600	3800	3.5	113	1.5	400	101
83	1291	1537	92	1.1	PHQ831_0055K402_0044 EZ815U	2493	2493	4850	24.00	24/1	2600	2600	3800	3.5	177	1.5	400	114
91	799	896	61	1.8	PHQ831_0055K402_0040 EZ813U	2421	2421	4446	22.00	22/1	2600	2600	3800	3.5	115	1.5	400	101
91	1183	1409	90	1.2	PHQ831_0055K402_0040 EZ815U	2421	2421	4446	22.00	22/1	2600	2600	3800	3.5	178	1.5	400	114
PHQ831K (n_{1N} = 3000 min^{-1}, $M_{2acc,max}$ = 2800 Nm)																		
9.8	1227	1341	13	1.1	PHQ831_0055K402_0560 EZ501U	2684	2684	4853	306.4	2451/8	3600	3600	5500	3.5	3.1	1.5	400	70
11	1111	1214	13	1.3	PHQ831_0055K402_0500 EZ501U	1708	1708	3088	277.3	5547/20	3600	3600	5500	3.5	3.1	1.5	400	70
12	1020	1115	12	1.4	PHQ831_0055K402_0460 EZ501U	2800	3168	4964	254.7	3311/13	3600	3600	5500	3.5	3.2	1.5	400	70

n_{2N} [rpm]	M_{2N} [Nm]	$M_{2,0}$ [Nm]	a_{th}	S	Type	M_{2acc} [Nm]	M_{2accHT} [Nm]	M_{2NOT} [Nm]	i	i_{exakt}	n_{1maxDB} EL1,2 [rpm]	n_{1maxDB} EL3,4,5,6 [rpm]	n_{1maxZB} [rpm]	$\Delta\varphi_2$ [arc min]	J_1 [kgcm²]	$\Delta\varphi_{2red}$ [arc min]	C_2 [Nm/ arcmin]	m [kg]
PHQ831K (n_{1N} = 3000 min^{-1}, $M_{2acc,max}$ = 2800 Nm)																		
13	892	975	12	1.6	PHQ831_0055K402_0410 EZ501U	1952	1952	3529	222.8	2451/11	3600	3600	5500	3.5	3.1	1.5	400	70
16	765	837	11	1.8	PHQ831_0055K402_0350 EZ501U	2800	2848	4644	191.2	45881/240	3600	3600	5500	3.5	3.4	1.5	400	70
16	1317	1424	20	1.1	PHQ831_0055K402_0350 EZ502U	2800	3168	4644	191.2	45881/240	3600	3600	5500	3.5	5.7	1.5	400	72
16	1317	1478	20	1.1	PHQ831_0055K402_0350 EZ701U	2800	3168	4964	191.2	45881/240	3600	3600	5500	3.5	9.0	1.5	400	74
16	742	811	11	1.9	PHQ831_0055K402_0340 EZ501U	2464	2464	4069	185.2	2408/13	3600	3600	5500	3.5	3.2	1.5	400	70
16	1276	1380	20	1.1	PHQ831_0055K402_0340 EZ502U	2464	2464	4069	185.2	2408/13	3600	3600	5500	3.5	5.5	1.5	400	72
16	1276	1432	20	1.1	PHQ831_0055K402_0340 EZ701U	2464	2464	4069	185.2	2408/13	3600	3600	5500	3.5	8.8	1.5	400	74
20	612	668	11	2.3	PHQ831_0055K402_0280 EZ501U	2276	2276	4273	152.7	14663/96	3600	3600	5500	3.5	3.6	1.5	400	70
20	1053	1138	19	1.3	PHQ831_0055K402_0280 EZ502U	2800	3150	4273	152.7	14663/96	3600	3600	5500	3.5	5.9	1.5	400	72
20	1053	1181	19	1.3	PHQ831_0055K402_0280 EZ701U	2800	2845	4964	152.7	14663/96	3600	3600	5500	3.5	9.2	1.5	400	74
20	1380	1579	24	1.0	PHQ831_0055K402_0280 EZ503U	2800	3150	4273	152.7	14663/96	3600	3600	5500	3.5	8.2	1.5	400	73
22	557	609	11	2.5	PHQ831_0055K402_0250 EZ501U	2072	2072	3377	139.0	4171/30	3600	3600	5500	3.5	3.4	1.5	400	70
22	958	1036	18	1.5	PHQ831_0055K402_0250 EZ502U	2490	2490	3377	139.0	4171/30	3600	3600	5500	3.5	5.7	1.5	400	72
22	958	1075	18	1.5	PHQ831_0055K402_0250 EZ701U	2589	2589	4964	139.0	4171/30	3600	3600	5500	3.5	9.0	1.5	400	74
22	1256	1437	24	1.1	PHQ831_0055K402_0250 EZ503U	2490	2490	3377	139.0	4171/30	3600	3600	5500	3.5	8.1	1.5	400	73
23	513	561	10	2.7	PHQ831_0055K402_0230 EZ501U	1909	1909	3884	128.1	6149/48	3600	3600	5500	3.5	3.8	1.5	400	70
23	883	954	18	1.6	PHQ831_0055K402_0230 EZ502U	2800	2863	3884	128.1	6149/48	3600	3600	5500	3.5	6.1	1.5	400	72
23	883	990	18	1.6	PHQ831_0055K402_0230 EZ701U	2386	2386	4964	128.1	6149/48	3600	3600	5500	3.5	9.4	1.5	400	74
23	1157	1324	23	1.2	PHQ831_0055K402_0230 EZ503U	2800	2863	3884	128.1	6149/48	3600	3600	5500	3.5	8.5	1.5	400	73
27	445	486	10	3.1	PHQ831_0055K402_0200 EZ501U	1655	1655	3107	111.1	1333/12	3600	3600	5500	3.5	3.7	1.5	400	70
27	765	828	17	1.8	PHQ831_0055K402_0200 EZ502U	2291	2291	3107	111.1	1333/12	3600	3600	5500	3.5	6.0	1.5	400	72
27	765	859	17	1.8	PHQ831_0055K402_0200 EZ701U	2069	2069	4964	111.1	1333/12	3600	3600	5500	3.5	9.3	1.5	400	74
27	1003	1148	23	1.4	PHQ831_0055K402_0200 EZ503U	2291	2291	3107	111.1	1333/12	3600	3600	5500	3.5	8.3	1.5	400	73
27	1241	1490	28	1.1	PHQ831_0055K402_0200 EZ702U	2800	3168	4964	111.1	1333/12	3600	3600	5500	3.5	14	1.5	400	76
27	1396	1655	31	1.0	PHQ831_0055K402_0200 EZ505U	2800	3168	4964	111.1	1333/12	3600	3600	5500	3.5	13	1.5	400	76
31	660	740	17	2.1	PHQ831_0055K402_0175 EZ701U	1783	1783	4964	95.73	8041/84	3400	3400	5000	3.5	9.9	1.5	400	74
31	1070	1284	27	1.3	PHQ831_0055K402_0175 EZ702U	2800	3168	4964	95.73	8041/84	3400	3400	5000	3.5	15	1.5	400	76
31	1203	1426	30	1.2	PHQ831_0055K402_0175 EZ505U	2800	3168	4964	95.73	8041/84	3400	3400	5000	3.5	14	1.5	400	76
32	373	408	9.6	3.8	PHQ831_0055K402_0170 EZ501U	1388	1388	2824	93.16	559/6	3600	3600	5500	3.5	3.9	1.5	400	70
32	642	694	16	2.2	PHQ831_0055K402_0170 EZ502U	2082	2082	2824	93.16	559/6	3600	3600	5500	3.5	6.2	1.5	400	72
32	642	720	16	2.2	PHQ831_0055K402_0170 EZ701U	1735	1735	4964	93.16	559/6	3600	3600	5500	3.5	9.5	1.5	400	74
32	842	963	22	1.7	PHQ831_0055K402_0170 EZ503U	2082	2082	2824	93.16	559/6	3600	3600	5500	3.5	8.6	1.5	400	73
32	1041	1249	27	1.3	PHQ831_0055K402_0170 EZ702U	2800	3168	4964	93.16	559/6	3600	3600	5500	3.5	15	1.5	400	76
32	1171	1388	30	1.2	PHQ831_0055K402_0170 EZ505U	2800	3168	4964	93.16	559/6	3600	3600	5500	3.5	13	1.5	400	76
39	526	590	16	2.7	PHQ831_0055K402_0140 EZ701U	1422	1422	4964	76.37	14663/192	3400	3400	5000	3.5	11	1.5	400	74
39	853	1024	25	1.6	PHQ831_0055K402_0140 EZ702U	2800	2916	4964	76.37	14663/192	3400	3400	5000	3.5	16	1.5	400	76
39	960	1138	29	1.5	PHQ831_0055K402_0140 EZ505U	2800	3168	4964	76.37	14663/192	3400	3400	5000	3.5	14	1.5	400	76
39	1173	1479	35	1.2	PHQ831_0055K402_0140 EZ703U	2800	3168	4964	76.37	14663/192	3400	3400	5000	3.5	24	1.5	400	78
43	480	538	15	2.9	PHQ831_0055K402_0125 EZ701U	1297	1297	4964	69.62	1462/21	3400	3400	5000	3.5	10	1.5	400	74
43	778	934	25	1.8	PHQ831_0055K402_0125 EZ702U	2658	2658	4964	69.62	1462/21	3400	3400	5000	3.5	15	1.5	400	76
43	875	1037	28	1.6	PHQ831_0055K402_0125 EZ505U	2800	3168	4964	69.62	1462/21	3400	3400	5000	3.5	14	1.5	400	76
43	1070	1348	34	1.3	PHQ831_0055K402_0125 EZ703U	2800	3168	4964	69.62	1462/21	3400	3400	5000	3.5	23	1.5	400	78
43	1381	1958	44	1.0	PHQ831_0055K402_0125 EZ705U	2800	3168	4964	69.62	1462/21	3400	3400	5000	3.5	36	1.5	400	84
47	437	490	15	3.2	PHQ831_0055K402_0115 EZ701U	1180	1180	4802	63.35	7095/112	3000	3000	4500	3.5	11	1.5	400	74
47	708	849	24	2.0	PHQ831_0055K402_0115 EZ702U	2419	2419	4802	63.35	7095/112	3000	3000	4500	3.5	16	1.5	400	76
47	796	944	27	1.8	PHQ831_0055K402_0115 EZ505U	2800	3168	4802	63.35	7095/112	3000	3000	4500	3.5	15	1.5	400	76
47	973	1227	33	1.4	PHQ831_0055K402_0115 EZ703U	2800	3168	4802	63.35	7095/112	3000	3000	4500	3.5	24	1.5	400	78
47	1257	1782	43	1.1	PHQ831_0055K402_0115 EZ705U	2800	3168	4964	63.35	7095/112	3000	3000	4500	3.5	37	1.5	400	84
54	383	429	14	3.7	PHQ831_0055K402_0100 EZ701U	1034	1034	4209	55.54	1333/24	3400	3400	5000	3.5	11	1.5	400	74
54	621	745	23	2.3	PHQ831_0055K402_0100 EZ702U	2120	2120	4209	55.54	1333/24	3400	3400	5000	3.5	16	1.5	400	76
54	698	827	26	2.0	PHQ831_0055K402_0100 EZ505U	2800	3103	4209	55.54	1333/24	3400	3400	5000	3.5	15	1.5	400	76
54	853	1076	32	1.6	PHQ831_0055K402_0100 EZ703U	2800	3103	4209	55.54	1333/24	3400	3400	5000	3.5	24	1.5	400	78
54	1102	1562	42	1.3	PHQ831_0055K402_0100 EZ705U	2800	3168	4964	55.54	1333/24	3400	3400	5000	3.5	36	1.5	400	84
59	350	393	14	4.0	PHQ831_0055K402_0092 EZ701U	946	946	3852	50.81	26015/512	3000	3000	4500	3.5	12	1.5	400	74
59	568	681	23	2.5	PHQ831_0055K402_0092 EZ702U	1940	1940	3852	50.81	26015/512	3000	3000	4500	3.5	17	1.5	400	76
59	639	757	26	2.2	PHQ831_0055K402_0092 EZ505U	2800	2840	3852	50.81	26015/512	3000	3000	4500	3.5	16	1.5	400	76
59	781	984	32	1.8	PHQ831_0055K402_0092 EZ703U	2800	2840	3852	50.81	26015/512	3000	3000	4500	3.5	25	1.5	400	78
59	1008	1429	41	1.4	PHQ831_0055K402_0092 EZ705U	2800	3168	4964	50.81	26015/512	3000	3000	4500	3.5	38	1.5	400	84
65	317	356	14	4.4	PHQ831_0055K402_0084 EZ701U	858	858	3492	46.07	645/14	3000	3000	4500	3.5	12	1.5	400	74
65	515	618	22	2.7	PHQ831_0055K402_0084 EZ702U	1759	1759	3492	46.07	645/14	3000	3000	4500	3.5	17	1.5	400	76
65	579	686	25	2.4	PHQ831_0055K402_0084 EZ505U	2575	2575	3492	46.07	645/14	3000	3000	4500	3.5	15	1.5	400	76
65	708	892	31	2.0	PHQ831_0055K402_0084 EZ703U	2575	2575	3492	46.07	645/14	3000	3000	4500	3.5	25	1.5	400	78
65	914	1296	40	1.5	PHQ831_0055K402_0084 EZ705U	2800	3098	4964	46.07	645/14	3000	3000	4500	3.5	37	1.5	400	84
73	813	1153	39	1.7	PHQ831_0055K402_0075 EZ705U	2800	2980	4964	41.01	20339/496	2600	2600	3800	3.5	39	1.5	400	84

n_{2N} [rpm]	M_{2N} [Nm]	$M_{2,0}$ [Nm]	a_{th}	S	Type	M_{2acc} [Nm]	M_{2accHT} [Nm]	M_{2NOT} [Nm]	i	i_{exakt}	n_{1maxDB} EL1,2 [rpm]	n_{1maxDB} EL3,4,5,6 [rpm]	n_{1maxZB} [rpm]	$\Delta\varphi_2$ [arc min]	J_1 [kgcm²]	$\Delta\varphi_{2red}$ [arc min]	C_2 [Nm/ arcmin]	m [kg]
PHQ831K (n_{1N} = 3000 min^{-1}, $M_{2acc,max}$ = 2800 Nm)																		
81	413	496	21	3.4	PHQ831_0055K402_0067 EZ702U	1411	1411	2801	36.95	2365/64	3000	3000	4500	3.5	18	1.5	400	76
81	465	551	24	3.0	PHQ831_0055K402_0067 EZ505U	2065	2065	2801	36.95	2365/64	3000	3000	4500	3.5	17	1.5	400	76
81	568	716	29	2.5	PHQ831_0055K402_0067 EZ703U	2065	2065	2801	36.95	2365/64	3000	3000	4500	3.5	26	1.5	400	78
81	733	1039	38	1.9	PHQ831_0055K402_0067 EZ705U	2800	2878	4964	36.95	2365/64	3000	3000	4500	3.5	39	1.5	400	84
91	655	928	37	2.1	PHQ831_0055K402_0060 EZ705U	2772	2772	4964	33.00	33/1	2600	2600	3800	3.5	41	1.5	400	84
101	591	839	36	2.4	PHQ831_0055K402_0054 EZ705U	2680	2680	4964	29.82	1849/62	2600	2600	3800	3.5	40	1.5	400	84
125	476	675	36	2.8	PHQ831_0055K402_0044 EZ705U	2324	2324	4850	24.00	24/1	2600	2600	3800	3.5	43	1.5	400	84
136	436	619	36	2.9	PHQ831_0055K402_0040 EZ705U	2131	2131	4446	22.00	22/1	2600	2600	3800	3.5	44	1.5	400	84
PHQ831K (n_{1N} = 4000 min^{-1}, $M_{2acc,max}$ = 2800 Nm)																		
72	1303	2260	49	1.1	PHQ831_0055K402_0100 EZ813U	2800	3168	4964	55.54	1333/24	3400	3400	5000	3.5	107	1.5	400	101
72	1350	3472	51	1.0	PHQ831_0055K402_0100 EZ815U	2800	3168	4964	55.54	1333/24	3400	3400	5000	3.5	170	1.5	400	114
79	1192	2068	48	1.2	PHQ831_0055K402_0092 EZ813U	2800	3168	4964	50.81	26015/512	3000	3000	4500	3.5	108	1.5	400	101
79	1235	3177	50	1.1	PHQ831_0055K402_0092 EZ815U	2800	3168	4964	50.81	26015/512	3000	3000	4500	3.5	171	1.5	400	114
87	1081	1875	47	1.3	PHQ831_0055K402_0084 EZ813U	2800	3098	4964	46.07	645/14	3000	3000	4500	3.5	108	1.5	400	101
87	1120	2881	49	1.3	PHQ831_0055K402_0084 EZ815U	2800	3098	4964	46.07	645/14	3000	3000	4500	3.5	171	1.5	400	114
108	867	1504	45	1.6	PHQ831_0055K402_0067 EZ813U	2800	2878	4964	36.95	2365/64	3000	3000	4500	3.5	109	1.5	400	101
108	898	2310	47	1.5	PHQ831_0055K402_0067 EZ815U	2800	2878	4964	36.95	2365/64	3000	3000	4500	3.5	172	1.5	400	114
PHQ831K (n_{1N} = 4500 min^{-1}, $M_{2acc,max}$ = 2800 Nm)																		
29	1351	2176	24	1.0	PHQ831_0055K402_0280 EZ505U	2800	3168	4964	152.7	14663/96	3600	3600	5500	3.5	13	1.5	400	76
32	1230	1981	23	1.1	PHQ831_0055K402_0250 EZ505U	2800	3168	4964	139.0	4171/30	3600	3600	5500	3.5	13	1.5	400	76
35	1133	1825	23	1.2	PHQ831_0055K402_0230 EZ505U	2800	3168	4964	128.1	6149/48	3600	3600	5500	3.5	13	1.5	400	76
41	983	1583	22	1.4	PHQ831_0055K402_0200 EZ505U	2800	3168	4964	111.1	1333/12	3600	3600	5500	3.5	13	1.5	400	76
41	1252	2069	28	1.1	PHQ831_0055K402_0200 EZ703U	2800	3168	4964	111.1	1333/12	3600	3600	5500	3.5	22	1.5	400	78
47	847	1364	21	1.7	PHQ831_0055K402_0175 EZ505U	2800	3168	4964	95.73	8041/84	3400	3400	5000	3.5	14	1.5	400	76
47	1079	1783	27	1.3	PHQ831_0055K402_0175 EZ703U	2800	3168	4964	95.73	8041/84	3400	3400	5000	3.5	23	1.5	400	78
48	824	1327	21	1.7	PHQ831_0055K402_0170 EZ505U	2800	3168	4964	93.16	559/6	3600	3600	5500	3.5	13	1.5	400	76
48	1050	1735	27	1.3	PHQ831_0055K402_0170 EZ703U	2800	3168	4964	93.16	559/6	3600	3600	5500	3.5	23	1.5	400	78
59	676	1088	20	2.1	PHQ831_0055K402_0140 EZ505U	2800	3168	4964	76.37	14663/192	3400	3400	5000	3.5	14	1.5	400	76
59	860	1422	26	1.6	PHQ831_0055K402_0140 EZ703U	2800	3168	4964	76.37	14663/192	3400	3400	5000	3.5	24	1.5	400	78
59	1166	2133	35	1.2	PHQ831_0055K402_0140 EZ705U	2800	3168	4964	76.37	14663/192	3400	3400	5000	3.5	36	1.5	400	84
65	616	992	20	2.3	PHQ831_0055K402_0125 EZ505U	2800	3168	4964	69.62	1462/21	3400	3400	5000	3.5	14	1.5	400	76
65	784	1297	25	1.8	PHQ831_0055K402_0125 EZ703U	2800	3168	4964	69.62	1462/21	3400	3400	5000	3.5	23	1.5	400	78
65	1063	1945	34	1.3	PHQ831_0055K402_0125 EZ705U	2800	3168	4964	69.62	1462/21	3400	3400	5000	3.5	36	1.5	400	84
71	560	903	19	2.5	PHQ831_0055K402_0115 EZ505U	2800	3168	4802	63.35	7095/112	3000	3000	4500	3.5	15	1.5	400	76
71	714	1180	24	2.0	PHQ831_0055K402_0115 EZ703U	2800	3168	4802	63.35	7095/112	3000	3000	4500	3.5	24	1.5	400	78
71	967	1770	33	1.4	PHQ831_0055K402_0115 EZ705U	2800	3168	4964	63.35	7095/112	3000	3000	4500	3.5	37	1.5	400	84
81	491	791	19	2.8	PHQ831_0055K402_0100 EZ505U	2800	3103	4209	55.54	1333/24	3400	3400	5000	3.5	15	1.5	400	76
81	626	1034	24	2.2	PHQ831_0055K402_0100 EZ703U	2800	3103	4209	55.54	1333/24	3400	3400	5000	3.5	24	1.5	400	78
81	848	1552	32	1.7	PHQ831_0055K402_0100 EZ705U	2800	3168	4964	55.54	1333/24	3400	3400	5000	3.5	36	1.5	400	84
89	449	724	18	3.1	PHQ831_0055K402_0092 EZ505U	2800	2840	3852	50.81	26015/512	3000	3000	4500	3.5	16	1.5	400	76
89	572	946	23	2.4	PHQ831_0055K402_0092 EZ703U	2800	2840	3852	50.81	26015/512	3000	3000	4500	3.5	25	1.5	400	78
89	776	1419	31	1.8	PHQ831_0055K402_0092 EZ705U	2800	3168	4964	50.81	26015/512	3000	3000	4500	3.5	38	1.5	400	84
98	408	656	18	3.4	PHQ831_0055K402_0084 EZ505U	2575	2575	3492	46.07	645/14	3000	3000	4500	3.5	15	1.5	400	76
98	519	858	23	2.7	PHQ831_0055K402_0084 EZ703U	2575	2575	3492	46.07	645/14	3000	3000	4500	3.5	25	1.5	400	78
98	704	1287	31	2.0	PHQ831_0055K402_0084 EZ705U	2800	3098	4964	46.07	645/14	3000	3000	4500	3.5	37	1.5	400	84
122	327	527	18	4.1	PHQ831_0055K402_0067 EZ505U	2065	2065	2801	36.95	2365/64	3000	3000	4500	3.5	17	1.5	400	76
122	416	688	23	3.2	PHQ831_0055K402_0067 EZ703U	2065	2065	2801	36.95	2365/64	3000	3000	4500	3.5	26	1.5	400	78
122	564	1032	30	2.4	PHQ831_0055K402_0067 EZ705U	2800	2878	4964	36.95	2365/64	3000	3000	4500	3.5	39	1.5	400	84
PHQ941K (n_{1N} = 2000 min^{-1}, $M_{2acc,max}$ = 5760 Nm)																		
19	3753	4209	53	1.0	PHQ941_0060K513_0175 EZ813U	5760	5760	11250	104.9	6293/60	2800	2800	4200	4.0	109	2.0	771	123
21	3455	3875	52	1.1	PHQ941_0060K513_0160 EZ813U	5760	5760	11250	96.56	26071/270	2300	2300	3600	4.0	110	2.0	771	123
23	3121	3500	50	1.2	PHQ941_0060K513_0145 EZ813U	5760	5760	11250	87.22	11774/135	2300	2300	3600	4.0	110	2.0	771	123
26	2750	3084	49	1.4	PHQ941_0060K513_0130 EZ813U	5760	5760	11250	76.85	1537/20	2300	2300	3600	4.0	112	2.0	771	123
29	2484	2786	47	1.5	PHQ941_0060K513_0115 EZ813U	5760	5760	11250	69.41	10759/155	2300	2300	3600	4.0	113	2.0	771	123
29	3679	4380	70	1.0	PHQ941_0060K513_0115 EZ815U	5760	5760	11250	69.41	10759/155	2300	2300	3600	4.0	176	2.0	771	136
33	2179	2444	45	1.7	PHQ941_0060K513_0100 EZ813U	5760	5760	11250	60.90	609/10	1900	1900	3200	4.0	115	2.0	771	123
33	3228	3843	67	1.2	PHQ941_0060K513_0100 EZ815U	5760	5760	11250	60.90	609/10	1900	1900	3200	4.0	178	2.0	771	136
36	1968	2208	44	1.9	PHQ941_0060K513_0092 EZ813U	5760	5760	10954	55.01	8526/155	1900	1900	3200	4.0	116	2.0	771	123
36	2915	3471	65	1.3	PHQ941_0060K513_0092 EZ815U	5760	5760	10954	55.01	8526/155	1900	1900	3200	4.0	179	2.0	771	136
41	1746	1959	43	2.2	PHQ941_0060K513_0081 EZ813U	5760	5760	9720	48.80	17081/350	1900	1900	3200	4.0	119	2.0	771	123
41	2587	3080	63	1.5	PHQ941_0060K513_0081 EZ815U	5760	5760	9720	48.80	17081/350	1900	1900	3200	4.0	182	2.0	771	136
45	1577	1769	43	2.3	PHQ941_0060K513_0073 EZ813U	5664	5664	8779	44.08	1102/25	1900	1900	3200	4.0	121	2.0	771	123
45	2336	2782	64	1.6	PHQ941_0060K513_0073 EZ815U	5760	5760	8779	44.08	1102/25	1900	1900	3200	4.0	184	2.0	771	136

n_{2N} [rpm]	M_{2N} [Nm]	$M_{2,0}$ [Nm]	a_{th}	S	Type	M_{2acc} [Nm]	M_{2accHT} [Nm]	M_{2NOT} [Nm]	i	i_{exakt}	n_{1maxDB} EL1,2 [rpm]	n_{1maxDB} EL3,4,5,6 [rpm]	n_{1maxZB} [rpm]	$\Delta\varphi_2$ [arc min]	J_1 [kgcm²]	$\Delta\varphi_{2red}$ [arc min]	C_2 [Nm/ arcmin]	m [kg]
PHQ941K (n_{1N} = 3000 min^{-1}, $M_{2acc,max}$ = 5760 Nm)																		
5.2	2288	2501	9.8	1.7	PHQ941_0060K513_0970 EZ501U	5275	5275	8701	579.9	115971/200	3400	3400	5000	4.0	3.2	2.0	771	93
5.7	2067	2259	9.5	1.8	PHQ941_0060K513_0870 EZ501U	4765	4765	7859	523.7	26187/50	3400	3400	5000	4.0	3.2	2.0	771	93
5.7	3557	3845	16	1.1	PHQ941_0060K513_0870 EZ502U	4765	4765	7859	523.7	26187/50	3400	3400	5000	4.0	5.5	2.0	771	94
5.7	3557	3990	16	1.1	PHQ941_0060K513_0870 EZ701U	4765	4765	7859	523.7	26187/50	3400	3400	5000	4.0	8.8	2.0	771	96
6.4	1837	2008	9.2	2.1	PHQ941_0060K513_0780 EZ501U	5760	5760	8724	465.6	26071/56	3400	3400	5000	4.0	3.3	2.0	771	93
6.4	3162	3418	16	1.2	PHQ941_0060K513_0780 EZ502U	5760	5760	8724	465.6	26071/56	3400	3400	5000	4.0	5.6	2.0	771	94
6.4	3162	3546	16	1.2	PHQ941_0060K513_0780 EZ701U	5760	5760	8724	465.6	26071/56	3400	3400	5000	4.0	8.9	2.0	771	96
7.1	1659	1814	8.9	2.3	PHQ941_0060K513_0700 EZ501U	5673	5673	7880	420.5	841/2	3400	3400	5000	4.0	3.4	2.0	771	93
7.1	2856	3087	15	1.3	PHQ941_0060K513_0700 EZ502U	5673	5673	7880	420.5	841/2	3400	3400	5000	4.0	5.7	2.0	771	94
7.1	2856	3203	15	1.3	PHQ941_0060K513_0700 EZ701U	5673	5673	7880	420.5	841/2	3400	3400	5000	4.0	9.0	2.0	771	96
7.1	3743	4284	20	1.0	PHQ941_0060K513_0700 EZ503U	5673	5673	7880	420.5	841/2	3400	3400	5000	4.0	8.0	2.0	771	96
7.7	1528	1670	8.7	2.5	PHQ941_0060K513_0650 EZ501U	5687	5687	7950	387.3	25172/65	3400	3400	5000	4.0	3.5	2.0	771	93
7.7	2630	2843	15	1.4	PHQ941_0060K513_0650 EZ502U	5760	5760	7950	387.3	25172/65	3400	3400	5000	4.0	5.8	2.0	771	94
7.7	2630	2950	15	1.4	PHQ941_0060K513_0650 EZ701U	5760	5760	11250	387.3	25172/65	3400	3400	5000	4.0	9.1	2.0	771	96
7.7	3448	3945	20	1.1	PHQ941_0060K513_0650 EZ503U	5760	5760	7950	387.3	25172/65	3400	3400	5000	4.0	8.2	2.0	771	96
8.6	1380	1509	8.4	2.8	PHQ941_0060K513_0580 EZ501U	5136	5136	7180	349.8	22736/65	3400	3400	5000	4.0	3.5	2.0	771	93
8.6	2376	2568	15	1.6	PHQ941_0060K513_0580 EZ502U	5294	5294	7180	349.8	22736/65	3400	3400	5000	4.0	5.8	2.0	771	94
8.6	2376	2664	15	1.6	PHQ941_0060K513_0580 EZ701U	5760	5760	11250	349.8	22736/65	3400	3400	5000	4.0	9.1	2.0	771	96
8.6	3114	3563	19	1.2	PHQ941_0060K513_0580 EZ503U	5294	5294	7180	349.8	22736/65	3400	3400	5000	4.0	8.2	2.0	771	96
10	1140	1246	8.0	3.3	PHQ941_0060K513_0480 EZ501U	4243	4243	6763	289.0	8091/28	3400	3400	5000	4.0	3.9	2.0	771	93
10	1962	2122	14	1.9	PHQ941_0060K513_0480 EZ502U	4986	4986	6763	289.0	8091/28	3400	3400	5000	4.0	6.2	2.0	771	94
10	1962	2201	14	1.9	PHQ941_0060K513_0480 EZ701U	5304	5304	11250	289.0	8091/28	3400	3400	5000	4.0	9.5	2.0	771	96
10	2572	2944	18	1.5	PHQ941_0060K513_0480 EZ503U	4986	4986	6763	289.0	8091/28	3400	3400	5000	4.0	8.6	2.0	771	96
10	3182	3819	22	1.2	PHQ941_0060K513_0480 EZ702U	5760	5760	11250	289.0	8091/28	3400	3400	5000	4.0	15	2.0	771	98
10	3580	4243	25	1.1	PHQ941_0060K513_0480 EZ505U	5760	5760	11250	289.0	8091/28	3400	3400	5000	4.0	13	2.0	771	98
11	1030	1126	7.7	3.7	PHQ941_0060K513_0440 EZ501U	3833	3833	6108	261.0	261/1	3400	3400	5000	4.0	4.0	2.0	771	93
11	1773	1916	13	2.1	PHQ941_0060K513_0440 EZ502U	4504	4504	6108	261.0	261/1	3400	3400	5000	4.0	6.3	2.0	771	94
11	1773	1988	13	2.1	PHQ941_0060K513_0440 EZ701U	4791	4791	11250	261.0	261/1	3400	3400	5000	4.0	9.6	2.0	771	96
11	2323	2659	17	1.6	PHQ941_0060K513_0440 EZ503U	4504	4504	6108	261.0	261/1	3400	3400	5000	4.0	8.6	2.0	771	96
11	2874	3449	22	1.3	PHQ941_0060K513_0440 EZ702U	5760	5760	11250	261.0	261/1	3400	3400	5000	4.0	15	2.0	771	98
11	3234	3833	24	1.2	PHQ941_0060K513_0440 EZ505U	5760	5760	11250	261.0	261/1	3400	3400	5000	4.0	13	2.0	771	98
13	1570	1761	13	2.4	PHQ941_0060K513_0390 EZ701U	4243	4243	11250	231.2	8091/35	3400	3400	5000	4.0	10	2.0	771	96
13	2546	3055	21	1.5	PHQ941_0060K513_0390 EZ702U	5760	5760	11250	231.2	8091/35	3400	3400	5000	4.0	15	2.0	771	98
13	2864	3395	23	1.3	PHQ941_0060K513_0390 EZ505U	5760	5760	11250	231.2	8091/35	3400	3400	5000	4.0	14	2.0	771	98
13	3501	4413	29	1.1	PHQ941_0060K513_0390 EZ703U	5760	5760	11250	231.2	8091/35	3400	3400	5000	4.0	23	2.0	771	100
14	1418	1591	12	2.7	PHQ941_0060K513_0350 EZ701U	3833	3833	11129	208.8	1044/5	3400	3400	5000	4.0	10	2.0	771	96
14	2300	2759	20	1.7	PHQ941_0060K513_0350 EZ702U	5760	5760	11129	208.8	1044/5	3400	3400	5000	4.0	15	2.0	771	98
14	2587	3066	23	1.5	PHQ941_0060K513_0350 EZ505U	5760	5760	11129	208.8	1044/5	3400	3400	5000	4.0	14	2.0	771	98
14	3162	3986	28	1.2	PHQ941_0060K513_0350 EZ703U	5760	5760	11129	208.8	1044/5	3400	3400	5000	4.0	23	2.0	771	100
15	1317	1477	12	2.9	PHQ941_0060K513_0320 EZ701U	3558	3558	11250	193.8	62031/320	3400	3400	5000	4.0	10	2.0	771	96
15	2135	2562	20	1.8	PHQ941_0060K513_0320 EZ702U	5760	5760	11250	193.8	62031/320	3400	3400	5000	4.0	16	2.0	771	98
15	2402	2846	22	1.6	PHQ941_0060K513_0320 EZ505U	5760	5760	11250	193.8	62031/320	3400	3400	5000	4.0	14	2.0	771	98
15	2935	3700	27	1.3	PHQ941_0060K513_0320 EZ703U	5760	5760	11250	193.8	62031/320	3400	3400	5000	4.0	24	2.0	771	100
15	3789	5373	35	1.0	PHQ941_0060K513_0320 EZ705U	5760	5760	11250	193.8	62031/320	3400	3400	5000	4.0	36	2.0	771	106
17	1189	1334	12	3.2	PHQ941_0060K513_0290 EZ701U	3214	3214	10349	175.1	14007/80	3400	3400	5000	4.0	11	2.0	771	96
17	1928	2314	19	2.0	PHQ941_0060K513_0290 EZ702U	5760	5760	10349	175.1	14007/80	3400	3400	5000	4.0	16	2.0	771	98
17	2169	2571	22	1.8	PHQ941_0060K513_0290 EZ505U	5760	5760	10349	175.1	14007/80	3400	3400	5000	4.0	14	2.0	771	98
17	2651	3342	26	1.4	PHQ941_0060K513_0290 EZ703U	5760	5760	10349	175.1	14007/80	3400	3400	5000	4.0	24	2.0	771	100
17	3423	4853	34	1.1	PHQ941_0060K513_0290 EZ705U	5760	5760	11250	175.1	14007/80	3400	3400	5000	4.0	36	2.0	771	106
21	992	1113	11	3.8	PHQ941_0060K513_0240 EZ701U	2681	2681	10139	146.1	11687/80	2800	2800	4200	4.0	11	2.0	771	96
21	1609	1931	18	2.4	PHQ941_0060K513_0240 EZ702U	5497	5497	10139	146.1	11687/80	2800	2800	4200	4.0	17	2.0	771	98
21	1810	2145	20	2.1	PHQ941_0060K513_0240 EZ505U	5760	5760	10139	146.1	11687/80	2800	2800	4200	4.0	15	2.0	771	98
21	2212	2789	25	1.7	PHQ941_0060K513_0240 EZ703U	5760	5760	10139	146.1	11687/80	2800	2800	4200	4.0	25	2.0	771	100
21	2856	4049	32	1.3	PHQ941_0060K513_0240 EZ705U	5760	5760	11250	146.1	11687/80	2800	2800	4200	4.0	37	2.0	771	106
23	896	1005	11	4.2	PHQ941_0060K513_0220 EZ701U	2422	2422	9158	132.0	2639/20	2800	2800	4200	4.0	12	2.0	771	96
23	1453	1744	18	2.6	PHQ941_0060K513_0220 EZ702U	4965	4965	9158	132.0	2639/20	2800	2800	4200	4.0	17	2.0	771	98
23	1635	1938	20	2.3	PHQ941_0060K513_0220 EZ505U	5760	5760	9158	132.0	2639/20	2800	2800	4200	4.0	15	2.0	771	98
23	1998	2519	24	1.9	PHQ941_0060K513_0220 EZ703U	5760	5760	9158	132.0	2639/20	2800	2800	4200	4.0	25	2.0	771	100
23	2579	3657	31	1.5	PHQ941_0060K513_0220 EZ705U	5760	5760	11250	132.0	2639/20	2800	2800	4200	4.0	37	2.0	771	106
26	789	885	10	4.8	PHQ941_0060K513_0195 EZ701U	2131	2131	8669	116.1	27869/240	2800	2800	4200	4.0	13	2.0	771	96
26	1279	1535	17	3.0	PHQ941_0060K513_0195 EZ702U	4369	4369	8669	116.1	27869/240	2800	2800	4200	4.0	18	2.0	771	98
26	1439	1705	19	2.6	PHQ941_0060K513_0195 EZ505U	5760	5760	8669	116.1	27869/240	2800	2800	4200	4.0	16	2.0	771	98
26	1758	2217	23	2.2	PHQ941_0060K513_0195 EZ703U	5760	5760	8669	116.1	27869/240	2800	2800	4200	4.0	26	2.0	771	100
26	2270	3218	30	1.7	PHQ941_0060K513_0195 EZ705U	5760	5760	11250	116.1	27869/240	2800	2800	4200	4.0	38	2.0	771	106

n_{2N} [rpm]	M_{2N} [Nm]	$M_{2,0}$ [Nm]	a_{th}	S	Type	M_{2acc} [Nm]	M_{2accHT} [Nm]	M_{2NOT} [Nm]	i	i_{exakt}	n_{1maxDB} EL1,2 [rpm]	n_{1maxDB} EL3,4,5,6 [rpm]	n_{1maxZB} [rpm]	$\Delta\varphi_2$ [arc min]	J_1 [kgcm²]	$\Delta\varphi_{2red}$ [arc min]	C_2 [Nm/ arcmin]	m [kg]
PHQ941K (n_{1N} = 3000 min^{-1}, $M_{2acc,max}$ = 5760 Nm)																		
29	1155	1386	16	3.3	PHQ941_0060K513_0175 EZ702U	3947	3947	7830	104.9	6293/60	2800	2800	4200	4.0	18	2.0	771	98
29	1300	1540	18	2.9	PHQ941_0060K513_0175 EZ505U	5760	5760	7830	104.9	6293/60	2800	2800	4200	4.0	17	2.0	771	98
29	1588	2002	23	2.4	PHQ941_0060K513_0175 EZ703U	5760	5760	7830	104.9	6293/60	2800	2800	4200	4.0	26	2.0	771	100
29	2050	2907	29	1.9	PHQ941_0060K513_0175 EZ705U	5760	5760	11250	104.9	6293/60	2800	2800	4200	4.0	38	2.0	771	106
31	1063	1276	16	3.6	PHQ941_0060K513_0160 EZ702U	3633	3633	7209	96.56	26071/270	2300	2300	3600	4.0	19	2.0	771	98
31	1196	1418	18	3.2	PHQ941_0060K513_0160 EZ505U	5315	5315	7209	96.56	26071/270	2300	2300	3600	4.0	18	2.0	771	98
31	1462	1843	22	2.6	PHQ941_0060K513_0160 EZ703U	5315	5315	7209	96.56	26071/270	2300	2300	3600	4.0	27	2.0	771	100
31	1888	2676	28	2.0	PHQ941_0060K513_0160 EZ705U	5760	5760	11250	96.56	26071/270	2300	2300	3600	4.0	39	2.0	771	106
34	961	1153	16	4.0	PHQ941_0060K513_0145 EZ702U	3282	3282	6512	87.22	11774/135	2300	2300	3600	4.0	20	2.0	771	98
34	1081	1281	17	3.5	PHQ941_0060K513_0145 EZ505U	4801	4801	6512	87.22	11774/135	2300	2300	3600	4.0	18	2.0	771	98
34	1321	1665	21	2.9	PHQ941_0060K513_0145 EZ703U	4801	4801	6512	87.22	11774/135	2300	2300	3600	4.0	28	2.0	771	100
34	1705	2417	28	2.2	PHQ941_0060K513_0145 EZ705U	5760	5760	11250	87.22	11774/135	2300	2300	3600	4.0	40	2.0	771	106
39	1502	2130	27	2.5	PHQ941_0060K513_0130 EZ705U	5760	5760	11250	76.85	1537/20	2300	2300	3600	4.0	42	2.0	771	106
43	1357	1924	26	2.7	PHQ941_0060K513_0115 EZ705U	5760	5760	11250	69.41	10759/155	2300	2300	3600	4.0	42	2.0	771	106
49	1190	1688	27	3.0	PHQ941_0060K513_0100 EZ705U	5760	5760	11250	60.90	609/10	1900	1900	3200	4.0	45	2.0	771	106
55	1075	1525	27	3.2	PHQ941_0060K513_0092 EZ705U	5250	5250	10954	55.01	8526/155	1900	1900	3200	4.0	46	2.0	771	106
61	954	1353	27	3.4	PHQ941_0060K513_0081 EZ705U	4658	4658	9720	48.80	17081/350	1900	1900	3200	4.0	49	2.0	771	106
68	862	1222	27	3.7	PHQ941_0060K513_0073 EZ705U	4207	4207	8779	44.08	1102/25	1900	1900	3200	4.0	51	2.0	771	106
PHQ941K (n_{1N} = 4000 min^{-1}, $M_{2acc,max}$ = 5760 Nm)																		
27	3379	5859	38	1.1	PHQ941_0060K513_0240 EZ813U	5760	5760	11250	146.1	11687/80	2800	2800	4200	4.0	107	2.0	771	123
27	3501	9002	39	1.1	PHQ941_0060K513_0240 EZ815U	5760	5760	11250	146.1	11687/80	2800	2800	4200	4.0	170	2.0	771	136
30	3052	5292	37	1.2	PHQ941_0060K513_0220 EZ813U	5760	5760	11250	132.0	2639/20	2800	2800	4200	4.0	108	2.0	771	123
30	3162	8131	38	1.2	PHQ941_0060K513_0220 EZ815U	5760	5760	11250	132.0	2639/20	2800	2800	4200	4.0	171	2.0	771	136
34	2686	4657	36	1.4	PHQ941_0060K513_0195 EZ813U	5760	5760	11250	116.1	27869/240	2800	2800	4200	4.0	109	2.0	771	123
34	2783	7155	37	1.4	PHQ941_0060K513_0195 EZ815U	5760	5760	11250	116.1	27869/240	2800	2800	4200	4.0	172	2.0	771	136
38	2426	4207	34	1.6	PHQ941_0060K513_0175 EZ813U	5760	5760	11250	104.9	6293/60	2800	2800	4200	4.0	109	2.0	771	123
38	2513	6463	36	1.5	PHQ941_0060K513_0175 EZ815U	5760	5760	11250	104.9	6293/60	2800	2800	4200	4.0	172	2.0	771	136
PHQ941K (n_{1N} = 4500 min^{-1}, $M_{2acc,max}$ = 5760 Nm)																		
12	3376	5438	19	1.1	PHQ941_0060K513_0650 EZ505U	5760	5760	11250	387.3	25172/65	3400	3400	5000	4.0	13	2.0	771	98
13	3050	4912	19	1.2	PHQ941_0060K513_0580 EZ505U	5760	5760	11250	349.8	22736/65	3400	3400	5000	4.0	13	2.0	771	98
16	2519	4058	18	1.5	PHQ941_0060K513_0480 EZ505U	5760	5760	11250	289.0	8091/28	3400	3400	5000	4.0	13	2.0	771	98
16	3209	5304	22	1.2	PHQ941_0060K513_0480 EZ703U	5760	5760	11250	289.0	8091/28	3400	3400	5000	4.0	23	2.0	771	100
17	2276	3665	17	1.7	PHQ941_0060K513_0440 EZ505U	5760	5760	11250	261.0	261/1	3400	3400	5000	4.0	13	2.0	771	98
17	2898	4791	22	1.3	PHQ941_0060K513_0440 EZ703U	5760	5760	11250	261.0	261/1	3400	3400	5000	4.0	23	2.0	771	100
19	2016	3246	16	1.9	PHQ941_0060K513_0390 EZ505U	5760	5760	11250	231.2	8091/35	3400	3400	5000	4.0	14	2.0	771	98
19	2567	4243	21	1.5	PHQ941_0060K513_0390 EZ703U	5760	5760	11250	231.2	8091/35	3400	3400	5000	4.0	23	2.0	771	100
22	1820	2932	16	2.1	PHQ941_0060K513_0350 EZ505U	5760	5760	11129	208.8	1044/5	3400	3400	5000	4.0	14	2.0	771	98
22	2319	3833	20	1.6	PHQ941_0060K513_0350 EZ703U	5760	5760	11129	208.8	1044/5	3400	3400	5000	4.0	23	2.0	771	100
23	1690	2722	16	2.2	PHQ941_0060K513_0320 EZ505U	5760	5760	11250	193.8	62031/320	3400	3400	5000	4.0	14	2.0	771	98
23	2153	3558	20	1.8	PHQ941_0060K513_0320 EZ703U	5760	5760	11250	193.8	62031/320	3400	3400	5000	4.0	24	2.0	771	100
23	2918	5337	27	1.3	PHQ941_0060K513_0320 EZ705U	5760	5760	11250	193.8	62031/320	3400	3400	5000	4.0	36	2.0	771	106
26	1527	2459	15	2.5	PHQ941_0060K513_0290 EZ505U	5760	5760	10349	175.1	14007/80	3400	3400	5000	4.0	14	2.0	771	98
26	1944	3214	19	2.0	PHQ941_0060K513_0290 EZ703U	5760	5760	10349	175.1	14007/80	3400	3400	5000	4.0	24	2.0	771	100
26	2635	4821	26	1.4	PHQ941_0060K513_0290 EZ705U	5760	5760	11250	175.1	14007/80	3400	3400	5000	4.0	36	2.0	771	106
PHQ1041K (n_{1N} = 2000 min^{-1}, $M_{2acc,max}$ = 10000 Nm)																		
11	6288	7052	44	1.0	PHQ1041_0060K713_0290 EZ813U	10000	–	20000	175.7	22491/128	2900	2900	4200	4.0	113	–	1561	183
13	5405	6062	42	1.2	PHQ1041_0060K713_0250 EZ813U	10000	–	20000	151.1	193347/1280	2400	2400	3600	4.0	116	–	1561	183
15	4882	5476	40	1.3	PHQ1041_0060K713_0230 EZ813U	10000	–	20000	136.4	43659/320	2400	2400	3600	4.0	117	–	1561	183
16	4344	4872	39	1.5	PHQ1041_0060K713_0200 EZ813U	10000	–	20000	121.4	357399/2944	2400	2400	3600	4.0	121	–	1561	183
16	6434	7661	58	1.0	PHQ1041_0060K713_0200 EZ815U	10000	–	20000	121.4	357399/2944	2400	2400	3600	4.0	184	–	1561	196
18	3924	4401	38	1.7	PHQ1041_0060K713_0185 EZ813U	10000	–	20000	109.7	80703/736	2400	2400	3600	4.0	121	–	1561	183
18	5812	6919	56	1.1	PHQ1041_0060K713_0185 EZ815U	10000	–	20000	109.7	80703/736	2400	2400	3600	4.0	184	–	1561	196
20	3519	3946	37	1.8	PHQ1041_0060K713_0165 EZ813U	10000	–	20000	98.33	6293/64	2000	2000	3200	4.0	126	–	1561	183
20	5211	6205	54	1.2	PHQ1041_0060K713_0165 EZ815U	10000	–	20000	98.33	6293/64	2000	2000	3200	4.0	189	–	1561	196
23	3178	3564	36	2.0	PHQ1041_0060K713_0150 EZ813U	10000	–	20000	88.81	1421/16	2000	2000	3200	4.0	127	–	1561	183
23	4707	5604	53	1.4	PHQ1041_0060K713_0150 EZ815U	10000	–	20000	88.81	1421/16	2000	2000	3200	4.0	190	–	1561	196
26	2800	3141	34	2.3	PHQ1041_0060K713_0130 EZ813U	10000	–	20000	78.26	10017/128	2000	2000	3200	4.0	134	–	1561	183
26	4148	4938	51	1.6	PHQ1041_0060K713_0130 EZ815U	10000	–	20000	78.26	10017/128	2000	2000	3200	4.0	197	–	1561	196
28	2529	2837	33	2.6	PHQ1041_0060K713_0120 EZ813U	9082	–	20000	70.69	70119/992	2000	2000	3200	4.0	136	–	1561	183
28	3746	4461	49	1.7	PHQ1041_0060K713_0120 EZ815U	10000	–	20000	70.69	70119/992	2000	2000	3200	4.0	199	–	1561	196
33	2184	2449	32	3.0	PHQ1041_0060K713_0100 EZ813U	7842	–	20000	61.03	1953/32	1700	1700	2700	4.0	147	–	1561	183
33	3235	3851	47	2.0	PHQ1041_0060K713_0100 EZ815U	10000	–	20000	61.03	1953/32	1700	1700	2700	4.0	210	–	1561	196
36	1973	2212	31	3.3	PHQ1041_0060K713_0092 EZ813U	7083	–	20000	55.13	441/8	1700	1700	2700	4.0	150	–	1561	183

n_{2N} [rpm]	M_{2N} [Nm]	$M_{2,0}$ [Nm]	a_{th}	S	Type	M_{2acc} [Nm]	M_{2accHT} [Nm]	M_{2NOT} [Nm]	i	i_{exakt}	n_{1maxDB} EL1,2 [rpm]	n_{1maxDB} EL3,4,5,6 [rpm]	n_{1maxZB} [rpm]	$\Delta\varphi_2$ [arc min]	J_1 [kgcm²]	$\Delta\varphi_{2red}$ [arc min]	C_2 [Nm/ arcmin]	m [kg]
PHQ1041K (n_{1N} = 2000 min^{-1}, $M_{2acc,max}$ = 10000 Nm)																		
36	2922	3479	46	2.2	PHQ1041_0060K713_0092 EZ815U	10000	–	20000	55.13	441/8	1700	1700	2700	4.0	213	–	1561	196
40	1798	2016	30	3.6	PHQ1041_0060K713_0084 EZ813U	6455	–	18762	50.24	263655/5248	1700	1700	2700	4.0	160	–	1561	183
40	2663	3170	44	2.4	PHQ1041_0060K713_0084 EZ815U	9221	–	18762	50.24	263655/5248	1700	1700	2700	4.0	224	–	1561	196
44	1624	1821	29	4.0	PHQ1041_0060K713_0076 EZ813U	5830	–	16947	45.38	59535/1312	1700	1700	2700	4.0	165	–	1561	183
44	2405	2864	43	2.7	PHQ1041_0060K713_0076 EZ815U	8329	–	16947	45.38	59535/1312	1700	1700	2700	4.0	228	–	1561	196
PHQ1041K (n_{1N} = 3000 min^{-1}, $M_{2acc,max}$ = 10000 Nm)																		
5.1	4015	4504	12	1.6	PHQ1041_0060K713_0990 EZ701U	10000	–	20000	591.2	302715/512	2900	2900	4200	4.0	9.7	–	1561	156
5.6	3627	4068	12	1.8	PHQ1041_0060K713_0890 EZ701U	9802	–	18207	534.0	68355/128	2900	2900	4200	4.0	9.7	–	1561	156
5.6	5881	7058	19	1.1	PHQ1041_0060K713_0890 EZ702U	10000	–	18207	534.0	68355/128	2900	2900	4200	4.0	15	–	1561	158
6.3	3212	3603	11	2.0	PHQ1041_0060K713_0790 EZ701U	8682	–	19642	473.0	60543/128	2900	2900	4200	4.0	10	–	1561	156
6.3	5209	6251	18	1.2	PHQ1041_0060K713_0790 EZ702U	10000	–	19642	473.0	60543/128	2900	2900	4200	4.0	16	–	1561	158
7.0	2901	3254	11	2.2	PHQ1041_0060K713_0710 EZ701U	7842	–	17742	427.2	13671/32	2900	2900	4200	4.0	10	–	1561	156
7.0	4705	5646	18	1.4	PHQ1041_0060K713_0710 EZ702U	10000	–	17742	427.2	13671/32	2900	2900	4200	4.0	16	–	1561	158
7.0	6469	8155	24	1.0	PHQ1041_0060K713_0710 EZ703U	10000	–	17742	427.2	13671/32	2900	2900	4200	4.0	23	–	1561	160
7.7	2642	2964	11	2.5	PHQ1041_0060K713_0650 EZ701U	7142	–	17542	389.1	99603/256	2900	2900	4200	4.0	11	–	1561	156
7.7	4285	5142	17	1.5	PHQ1041_0060K713_0650 EZ702U	10000	–	17542	389.1	99603/256	2900	2900	4200	4.0	16	–	1561	158
7.7	5892	7427	23	1.1	PHQ1041_0060K713_0650 EZ703U	10000	–	17542	389.1	99603/256	2900	2900	4200	4.0	24	–	1561	160
8.5	2387	2677	10	2.7	PHQ1041_0060K713_0590 EZ701U	6450	–	15845	351.4	22491/64	2900	2900	4200	4.0	11	–	1561	156
8.5	3870	4644	17	1.7	PHQ1041_0060K713_0590 EZ702U	10000	–	15845	351.4	22491/64	2900	2900	4200	4.0	16	–	1561	158
8.5	5322	6708	23	1.2	PHQ1041_0060K713_0590 EZ703U	10000	–	15845	351.4	22491/64	2900	2900	4200	4.0	24	–	1561	160
10	2033	2280	9.7	3.2	PHQ1041_0060K713_0500 EZ701U	5493	–	15144	299.3	498015/1664	2900	2900	4200	4.0	12	–	1561	156
10	3296	3955	16	2.0	PHQ1041_0060K713_0500 EZ702U	10000	–	15144	299.3	498015/1664	2900	2900	4200	4.0	18	–	1561	158
10	4532	5713	22	1.4	PHQ1041_0060K713_0500 EZ703U	10000	–	15144	299.3	498015/1664	2900	2900	4200	4.0	26	–	1561	160
10	5851	8295	28	1.1	PHQ1041_0060K713_0500 EZ705U	10000	–	20000	299.3	498015/1664	2900	2900	4200	4.0	38	–	1561	166
11	1836	2059	9.4	3.5	PHQ1041_0060K713_0450 EZ701U	4962	–	13679	270.3	112455/416	2900	2900	4200	4.0	13	–	1561	156
11	2977	3573	15	2.2	PHQ1041_0060K713_0450 EZ702U	10000	–	13679	270.3	112455/416	2900	2900	4200	4.0	18	–	1561	158
11	4094	5160	21	1.6	PHQ1041_0060K713_0450 EZ703U	10000	–	13679	270.3	112455/416	2900	2900	4200	4.0	26	–	1561	160
11	5284	7492	27	1.2	PHQ1041_0060K713_0450 EZ705U	10000	–	20000	270.3	112455/416	2900	2900	4200	4.0	38	–	1561	166
13	1599	1793	9.0	4.1	PHQ1041_0060K713_0390 EZ701U	4321	–	14060	235.4	7533/32	2900	2900	4200	4.0	14	–	1561	156
13	2593	3111	15	2.5	PHQ1041_0060K713_0390 EZ702U	8858	–	14060	235.4	7533/32	2900	2900	4200	4.0	20	–	1561	158
13	3565	4494	20	1.8	PHQ1041_0060K713_0390 EZ703U	10000	–	14060	235.4	7533/32	2900	2900	4200	4.0	27	–	1561	160
13	4602	6525	26	1.4	PHQ1041_0060K713_0390 EZ705U	10000	–	20000	235.4	7533/32	2900	2900	4200	4.0	40	–	1561	166
14	1444	1620	8.8	4.5	PHQ1041_0060K713_0350 EZ701U	3903	–	12700	212.6	1701/8	2900	2900	4200	4.0	15	–	1561	156
14	2342	2810	14	2.8	PHQ1041_0060K713_0350 EZ702U	8001	–	12700	212.6	1701/8	2900	2900	4200	4.0	20	–	1561	158
14	3220	4059	20	2.0	PHQ1041_0060K713_0350 EZ703U	9363	–	12700	212.6	1701/8	2900	2900	4200	4.0	28	–	1561	160
14	4157	5893	25	1.6	PHQ1041_0060K713_0350 EZ705U	10000	–	20000	212.6	1701/8	2900	2900	4200	4.0	40	–	1561	166
15	3803	5392	25	1.7	PHQ1041_0060K713_0320 EZ705U	10000	–	20000	194.5	99603/512	2900	2900	4200	4.0	42	–	1561	166
17	3435	4870	24	1.9	PHQ1041_0060K713_0290 EZ705U	10000	–	20000	175.7	22491/128	2900	2900	4200	4.0	42	–	1561	166
20	2953	4187	23	2.2	PHQ1041_0060K713_0250 EZ705U	10000	–	20000	151.1	193347/1280	2400	2400	3600	4.0	46	–	1561	166
22	2667	3781	22	2.4	PHQ1041_0060K713_0230 EZ705U	10000	–	20000	136.4	43659/320	2400	2400	3600	4.0	46	–	1561	166
25	2373	3365	21	2.7	PHQ1041_0060K713_0200 EZ705U	10000	–	20000	121.4	357399/2944	2400	2400	3600	4.0	50	–	1561	166
27	2143	3039	21	3.0	PHQ1041_0060K713_0185 EZ705U	10000	–	20000	109.7	80703/736	2400	2400	3600	4.0	51	–	1561	166
31	1922	2725	20	3.4	PHQ1041_0060K713_0165 EZ705U	9385	–	19525	98.33	6293/64	2000	2000	3200	4.0	55	–	1561	166
34	1736	2462	19	3.7	PHQ1041_0060K713_0150 EZ705U	8477	–	17637	88.81	1421/16	2000	2000	3200	4.0	57	–	1561	166
38	1530	2169	19	4.2	PHQ1041_0060K713_0130 EZ705U	7469	–	15584	78.26	10017/128	2000	2000	3200	4.0	63	–	1561	166
42	1382	1959	18	4.7	PHQ1041_0060K713_0120 EZ705U	6747	–	14077	70.69	70119/992	2000	2000	3200	4.0	65	–	1561	166
PHQ1041K (n_{1N} = 4000 min^{-1}, $M_{2acc,max}$ = 10000 Nm)																		
15	6252	10842	32	1.0	PHQ1041_0060K713_0450 EZ813U	10000	–	20000	270.3	112455/416	2900	2900	4200	4.0	108	–	1561	183
15	6478	16657	33	1.0	PHQ1041_0060K713_0450 EZ815U	10000	–	20000	270.3	112455/416	2900	2900	4200	4.0	172	–	1561	196
17	5444	9441	31	1.2	PHQ1041_0060K713_0390 EZ813U	10000	–	20000	235.4	7533/32	2900	2900	4200	4.0	110	–	1561	183
17	5641	14505	32	1.2	PHQ1041_0060K713_0390 EZ815U	10000	–	20000	235.4	7533/32	2900	2900	4200	4.0	173	–	1561	196
19	4918	8528	30	1.3	PHQ1041_0060K713_0350 EZ813U	10000	–	20000	212.6	1701/8	2900	2900	4200	4.0	110	–	1561	183
19	5095	13102	31	1.3	PHQ1041_0060K713_0350 EZ815U	10000	–	20000	212.6	1701/8	2900	2900	4200	4.0	173	–	1561	196
21	4499	7802	29	1.4	PHQ1041_0060K713_0320 EZ813U	10000	–	20000	194.5	99603/512	2900	2900	4200	4.0	112	–	1561	183
21	4662	11987	30	1.4	PHQ1041_0060K713_0320 EZ815U	10000	–	20000	194.5	99603/512	2900	2900	4200	4.0	175	–	1561	196
23	4064	7047	28	1.6	PHQ1041_0060K713_0290 EZ813U	10000	–	20000	175.7	22491/128	2900	2900	4200	4.0	113	–	1561	183
23	4210	10827	29	1.5	PHQ1041_0060K713_0290 EZ815U	10000	–	20000	175.7	22491/128	2900	2900	4200	4.0	176	–	1561	196
PHQ1141K (n_{1N} = 2000 min^{-1}, $M_{2acc,max}$ = 22000 Nm)																		
5.6	12685	14227	29	1.0	PHQ1141_0060K813_0590 EZ813U	22000	–	39925	354.5	42539/120	2800	2800	4000	4.0	110	–	2623	323
6.8	10518	11797	28	1.2	PHQ1141_0060K813_0490 EZ813U	22000	–	37770	293.9	16461/56	2800	2800	4000	4.0	113	–	2623	323
7.5	9501	10655	27	1.4	PHQ1141_0060K813_0440 EZ813U	22000	–	34112	265.5	531/2	2800	2800	4000	4.0	114	–	2623	323
8.3	8590	9634	26	1.5	PHQ1141_0060K813_0400 EZ813U	22000	–	44000	240.1	38409/160	2800	2800	4000	4.0	117	–	2623	323
8.3	12723	15149	38	1.0	PHQ1141_0060K813_0400 EZ815U	22000	–	44000	240.1	38409/160	2800	2800	4000	4.0	180	–	2623	336

n_{2N} [rpm]	M_{2N} [Nm]	$M_{2,0}$ [Nm]	a_{th}	S	Type	M_{2acc} [Nm]	M_{2accHT} [Nm]	M_{2NOT} [Nm]	i	i_{exakt}	n_{1maxDB} EL1,2 [rpm]	n_{1maxDB} EL3,4,5,6 [rpm]	n_{1maxZB} [rpm]	$\Delta\varphi_2$ [arc min]	J_1 [kgcm²]	$\Delta\varphi_{2red}$ [arc min]	C_2 [Nm/ arcmin]	m [kg]
PHQ1141K (n_{1N} = 2000 min^{-1}, $M_{2acc,max}$ = 22000 Nm)																		
9.2	7759	8702	25	1.7	PHQ1141_0060K813_0360 EZ813U	22000	–	44000	216.8	8673/40	2800	2800	4000	4.0	117	–	2623	323
9.2	11492	13683	37	1.1	PHQ1141_0060K813_0360 EZ815U	22000	–	44000	216.8	8673/40	2800	2800	4000	4.0	181	–	2623	336
10	6954	7799	24	1.9	PHQ1141_0060K813_0320 EZ813U	22000	–	44000	194.3	31093/160	2800	2800	4000	4.0	122	–	2623	323
10	10300	12263	36	1.3	PHQ1141_0060K813_0320 EZ815U	22000	–	44000	194.3	31093/160	2800	2800	4000	4.0	185	–	2623	336
11	6281	7044	24	2.1	PHQ1141_0060K813_0290 EZ813U	22000	–	44000	175.5	7021/40	2800	2800	4000	4.0	123	–	2623	323
11	9303	11076	35	1.4	PHQ1141_0060K813_0290 EZ815U	22000	–	44000	175.5	7021/40	2800	2800	4000	4.0	186	–	2623	336
13	5478	6144	23	2.4	PHQ1141_0060K813_0260 EZ813U	19668	–	44000	153.1	140833/920	2300	2300	3500	4.0	130	–	2623	323
13	8113	9660	34	1.6	PHQ1141_0060K813_0260 EZ815U	22000	–	44000	153.1	140833/920	2300	2300	3500	4.0	193	–	2623	336
14	4948	5549	22	2.6	PHQ1141_0060K813_0230 EZ813U	17765	–	44000	138.3	31801/230	2300	2300	3500	4.0	131	–	2623	323
14	7328	8725	33	1.8	PHQ1141_0060K813_0230 EZ815U	22000	–	44000	138.3	31801/230	2300	2300	3500	4.0	194	–	2623	336
17	4119	4619	21	3.2	PHQ1141_0060K813_0190 EZ813U	14789	–	42965	115.1	133517/1160	2300	2300	3500	4.0	143	–	2623	323
17	6100	7263	31	2.1	PHQ1141_0060K813_0190 EZ815U	21126	–	42965	115.1	133517/1160	2300	2300	3500	4.0	206	–	2623	336
19	3720	4172	20	3.5	PHQ1141_0060K813_0175 EZ813U	13358	–	38804	104.0	30149/290	2300	2300	3500	4.0	145	–	2623	323
19	5510	6561	30	2.4	PHQ1141_0060K813_0175 EZ815U	19082	–	38804	104.0	30149/290	2300	2300	3500	4.0	208	–	2623	336
20	3528	3957	20	3.7	PHQ1141_0060K813_0165 EZ813U	12668	–	36803	98.59	126201/1280	1900	1900	3000	4.0	152	–	2623	323
20	5225	6222	29	2.5	PHQ1141_0060K813_0165 EZ815U	18097	–	36803	98.59	126201/1280	1900	1900	3000	4.0	215	–	2623	336
22	3187	3574	19	4.1	PHQ1141_0060K813_0150 EZ813U	11442	–	33239	89.05	28497/320	1900	1900	3000	4.0	155	–	2623	323
22	4720	5620	29	2.8	PHQ1141_0060K813_0150 EZ815U	16346	–	33239	89.05	28497/320	1900	1900	3000	4.0	218	–	2623	336
32	3269	3892	26	4.0	PHQ1141_0060K813_0105 EZ815U	11320	–	23027	61.67	53041/860	1600	1600	2600	4.0	262	–	2623	336
36	2952	3515	25	4.4	PHQ1141_0060K813_0093 EZ815U	10225	–	20797	55.70	11977/215	1600	1600	2600	4.0	271	–	2623	336
40	2621	3121	24	5.0	PHQ1141_0060K813_0082 EZ815U	9078	–	18470	49.46	96937/1960	1600	1600	2600	4.0	299	–	2623	336
PHQ1141K (n_{1N} = 3000 min^{-1}, $M_{2acc,max}$ = 22000 Nm)																		
5.1	3959	4441	6.4	3.3	PHQ1141_0060K813_0970 EZ701U	10701	–	22754	583.0	93279/160	2800	2800	4000	4.0	11	–	2623	296
5.1	6421	7705	10	2.0	PHQ1141_0060K813_0970 EZ702U	16776	–	22754	583.0	93279/160	2800	2800	4000	4.0	16	–	2623	299
5.1	8828	11129	14	1.5	PHQ1141_0060K813_0970 EZ703U	16776	–	22754	583.0	93279/160	2800	2800	4000	4.0	24	–	2623	301
5.7	3576	4011	6.2	3.6	PHQ1141_0060K813_0880 EZ701U	9665	–	20551	526.6	21063/40	2800	2800	4000	4.0	11	–	2623	296
5.7	5799	6959	10	2.2	PHQ1141_0060K813_0880 EZ702U	15152	–	20551	526.6	21063/40	2800	2800	4000	4.0	17	–	2623	299
5.7	7974	10052	14	1.6	PHQ1141_0060K813_0880 EZ703U	15152	–	20551	526.6	21063/40	2800	2800	4000	4.0	24	–	2623	301
6.3	3235	3628	6.1	4.0	PHQ1141_0060K813_0790 EZ701U	8743	–	20421	476.3	45725/96	2800	2800	4000	4.0	12	–	2623	296
6.3	5246	6295	9.8	2.5	PHQ1141_0060K813_0790 EZ702U	15056	–	20421	476.3	45725/96	2800	2800	4000	4.0	18	–	2623	299
6.3	7213	9092	14	1.8	PHQ1141_0060K813_0790 EZ703U	15056	–	20421	476.3	45725/96	2800	2800	4000	4.0	25	–	2623	301
6.3	9311	13201	17	1.4	PHQ1141_0060K813_0790 EZ705U	22000	–	44000	476.3	45725/96	2800	2800	4000	4.0	38	–	2623	306
7.0	2922	3277	5.9	4.4	PHQ1141_0060K813_0720 EZ701U	7897	–	18443	430.2	10325/24	2800	2800	4000	4.0	13	–	2623	296
7.0	4738	5685	9.5	2.7	PHQ1141_0060K813_0720 EZ702U	13598	–	18443	430.2	10325/24	2800	2800	4000	4.0	18	–	2623	299
7.0	6515	8212	13	2.0	PHQ1141_0060K813_0720 EZ703U	13598	–	18443	430.2	10325/24	2800	2800	4000	4.0	26	–	2623	301
7.0	8410	11924	17	1.5	PHQ1141_0060K813_0720 EZ705U	22000	–	43110	430.2	10325/24	2800	2800	4000	4.0	38	–	2623	306
7.6	7672	10878	16	1.7	PHQ1141_0060K813_0650 EZ705U	22000	–	44000	392.5	188387/480	2800	2800	4000	4.0	39	–	2623	306
8.5	6930	9825	16	1.9	PHQ1141_0060K813_0590 EZ705U	22000	–	39925	354.5	42539/120	2800	2800	4000	4.0	40	–	2623	306
10	3237	3885	8.9	3.8	PHQ1141_0060K813_0490 EZ702U	11061	–	16837	293.9	16461/56	2800	2800	4000	4.0	23	–	2623	299
10	4451	5611	12	2.8	PHQ1141_0060K813_0490 EZ703U	12414	–	16837	293.9	16461/56	2800	2800	4000	4.0	30	–	2623	301
10	5746	8147	15	2.3	PHQ1141_0060K813_0490 EZ705U	22000	–	37770	293.9	16461/56	2800	2800	4000	4.0	43	–	2623	306
11	2924	3509	9.6	3.8	PHQ1141_0060K813_0440 EZ702U	9990	–	15206	265.5	531/2	2800	2800	4000	4.0	23	–	2623	299
11	4020	5068	13	2.8	PHQ1141_0060K813_0440 EZ703U	11211	–	15206	265.5	531/2	2800	2800	4000	4.0	31	–	2623	301
11	5190	7359	15	2.5	PHQ1141_0060K813_0440 EZ705U	22000	–	34112	265.5	531/2	2800	2800	4000	4.0	43	–	2623	306
12	4693	6653	14	2.8	PHQ1141_0060K813_0400 EZ705U	22000	–	33607	240.1	38409/160	2800	2800	4000	4.0	46	–	2623	306
14	4239	6010	14	3.1	PHQ1141_0060K813_0360 EZ705U	20696	–	30353	216.8	8673/40	2800	2800	4000	4.0	47	–	2623	306
15	3799	5386	13	3.4	PHQ1141_0060K813_0320 EZ705U	18549	–	32424	194.3	31093/160	2800	2800	4000	4.0	51	–	2623	306
17	3431	4865	13	3.8	PHQ1141_0060K813_0290 EZ705U	16753	–	29284	175.5	7021/40	2800	2800	4000	4.0	52	–	2623	306
20	2992	4243	12	4.3	PHQ1141_0060K813_0260 EZ705U	14611	–	27103	153.1	140833/920	2300	2300	3500	4.0	59	–	2623	306
22	2703	3832	12	4.8	PHQ1141_0060K813_0230 EZ705U	13197	–	24479	138.3	31801/230	2300	2300	3500	4.0	61	–	2623	306
PHQ1141K (n_{1N} = 4000 min^{-1}, $M_{2acc,max}$ = 22000 Nm)																		
8.4	11016	19103	21	1.2	PHQ1141_0060K813_0790 EZ813U	22000	–	44000	476.3	45725/96	2800	2800	4000	4.0	108	–	2623	323
8.4	11414	29349	21	1.1	PHQ1141_0060K813_0790 EZ815U	22000	–	44000	476.3	45725/96	2800	2800	4000	4.0	171	–	2623	336
9.3	9950	17254	20	1.3	PHQ1141_0060K813_0720 EZ813U	22000	–	43110	430.2	10325/24	2800	2800	4000	4.0	108	–	2623	323
9.3	10309	26509	21	1.3	PHQ1141_0060K813_0720 EZ815U	22000	–	43110	430.2	10325/24	2800	2800	4000	4.0	171	–	2623	336
10	9077	15741	19	1.4	PHQ1141_0060K813_0650 EZ813U	22000	–	44000	392.5	188387/480	2800	2800	4000	4.0	110	–	2623	323
10	9405	24183	20	1.4	PHQ1141_0060K813_0650 EZ815U	22000	–	44000	392.5	188387/480	2800	2800	4000	4.0	173	–	2623	336
11	8199	14217	19	1.6	PHQ1141_0060K813_0590 EZ813U	22000	–	39925	354.5	42539/120	2800	2800	4000	4.0	110	–	2623	323
11	8495	21843	20	1.5	PHQ1141_0060K813_0590 EZ815U	22000	–	39925	354.5	42539/120	2800	2800	4000	4.0	173	–	2623	336
14	6798	11789	18	1.9	PHQ1141_0060K813_0490 EZ813U	22000	–	37770	293.9	16461/56	2800	2800	4000	4.0	113	–	2623	323
14	7044	18112	18	1.8	PHQ1141_0060K813_0490 EZ815U	22000	–	37770	293.9	16461/56	2800	2800	4000	4.0	176	–	2623	336
15	6140	10648	17	2.1	PHQ1141_0060K813_0440 EZ813U	22000	–	34112	265.5	531/2	2800	2800	4000	4.0	114	–	2623	323
15	6362	16360	18	2.0	PHQ1141_0060K813_0440 EZ815U	22000	–	34112	265.5	531/2	2800	2800	4000	4.0	177	–	2623	336
17	5552	9628	17	2.3	PHQ1141_0060K813_0400 EZ813U	22000	–	44000	240.1	38409/160	2800	2800	4000	4.0	117	–	2623	323

n_{2N} [rpm]	M_{2N} [Nm]	$M_{2,0}$ [Nm]	a_{th}	S	Type	M_{2acc} [Nm]	M_{2accHT} [Nm]	M_{2NOT} [Nm]	i	i_{exakt}	n_{1maxDB} EL1,2 [rpm]	n_{1maxDB} EL3,4,5,6 [rpm]	n_{1maxZB} [rpm]	$\Delta\varphi_2$ [arc min]	J_1 [kgcm²]	$\Delta\varphi_{2red}$ [arc min]	C_2 [Nm/ arcmin]	m [kg]
PHQ1141K (n_{1N} = 4000 min^{-1}, $M_{2acc,max}$ = 22000 Nm)																		
17	5752	14792	17	2.3	PHQ1141_0060K813_0400 EZ815U	22000	–	44000	240.1	38409/160	2800	2800	4000	4.0	180	–	2623	336
18	5015	8696	16	2.6	PHQ1141_0060K813_0360 EZ813U	22000	–	44000	216.8	8673/40	2800	2800	4000	4.0	117	–	2623	323
18	5196	13361	17	2.5	PHQ1141_0060K813_0360 EZ815U	22000	–	44000	216.8	8673/40	2800	2800	4000	4.0	181	–	2623	336
21	4494	7794	16	2.9	PHQ1141_0060K813_0320 EZ813U	22000	–	44000	194.3	31093/160	2800	2800	4000	4.0	122	–	2623	323
21	4657	11975	16	2.8	PHQ1141_0060K813_0320 EZ815U	22000	–	44000	194.3	31093/160	2800	2800	4000	4.0	185	–	2623	336
23	4059	7040	15	3.2	PHQ1141_0060K813_0290 EZ813U	22000	–	44000	175.5	7021/40	2800	2800	4000	4.0	123	–	2623	323
23	4206	10816	16	3.1	PHQ1141_0060K813_0290 EZ815U	22000	–	44000	175.5	7021/40	2800	2800	4000	4.0	186	–	2623	336
PHQ1241K (n_{1N} = 2000 min^{-1}, $M_{2acc,max}$ = 43000 Nm)																		
3.5	20485	22975	19	1.2	PHQ1241_0060K913_0950 EZ813U	37154	–	56722	572.5	293105/512	2600	2600	3800	4.0	111	–	4665	570
3.6	19517	21890	18	1.3	PHQ1241_0060K914_0920 EZ813U	39537	–	53625	554.1	7199037/12992	2600	2600	3800	4.0	110	–	4665	583
4.4	16103	18061	18	1.6	PHQ1241_0060K913_0750 EZ813U	39283	–	53281	450.0	187209/416	2600	2600	3800	4.0	114	–	4665	570
4.4	23852	28399	26	1.0	PHQ1241_0060K913_0750 EZ815U	39283	–	53281	450.0	187209/416	2600	2600	3800	4.0	177	–	4665	583
5.3	13541	15188	17	1.8	PHQ1241_0060K913_0630 EZ813U	43000	–	80000	378.4	629703/1664	2600	2600	3800	4.0	118	–	4665	570
5.3	20057	23881	25	1.2	PHQ1241_0060K913_0630 EZ815U	43000	–	80000	378.4	629703/1664	2600	2600	3800	4.0	181	–	4665	583
6.8	10507	11784	15	2.4	PHQ1241_0060K913_0490 EZ813U	37726	–	80000	293.6	300669/1024	2600	2600	3800	4.0	125	–	4665	570
6.8	15562	18529	23	1.6	PHQ1241_0060K913_0490 EZ815U	43000	–	80000	293.6	300669/1024	2600	2600	3800	4.0	188	–	4665	583
8.8	8168	9161	14	3.1	PHQ1241_0060K913_0380 EZ813U	29327	–	78148	228.3	584319/2560	2600	2600	3800	4.0	135	–	4665	570
8.8	12098	14404	21	2.1	PHQ1241_0060K913_0380 EZ815U	41896	–	78148	228.3	584319/2560	2600	2600	3800	4.0	198	–	4665	583
10	6895	7734	14	3.6	PHQ1241_0060K913_0320 EZ813U	24759	–	71941	192.7	141825/736	2600	2600	3800	4.0	144	–	4665	570
10	10213	12160	20	2.4	PHQ1241_0060K913_0320 EZ815U	35370	–	71941	192.7	141825/736	2600	2600	3800	4.0	207	–	4665	583
14	5141	5766	12	4.9	PHQ1241_0060K913_0240 EZ813U	18458	–	53625	143.7	266631/1856	2200	2200	3300	4.0	166	–	4665	570
14	7614	9066	18	3.3	PHQ1241_0060K913_0240 EZ815U	26369	–	53625	143.7	266631/1856	2200	2200	3300	4.0	230	–	4665	583
17	6062	7218	17	4.1	PHQ1241_0060K913_0190 EZ815U	20994	–	42705	114.4	915/8	2200	2200	3300	4.0	255	–	4665	583
PHQ1241K (n_{1N} = 3000 min^{-1}, $M_{2acc,max}$ = 39280 Nm)																		
1.3	14989	16812	5.3	1.7	PHQ1241_0060K914_3740 EZ701U	37154	–	56722	2242	13775935/6144	2600	2600	3800	4.0	9.4	–	4665	555
1.3	24306	29167	8.6	1.0	PHQ1241_0060K914_3740 EZ702U	37154	–	56722	2242	13775935/6144	2600	2600	3800	4.0	15	–	4665	558
1.7	11783	13216	4.9	2.1	PHQ1241_0060K914_2940 EZ701U	31845	–	53281	1763	2932941/1664	2600	2600	3800	4.0	9.6	–	4665	555
1.7	19107	22928	8.0	1.3	PHQ1241_0060K914_2940 EZ702U	39283	–	53281	1763	2932941/1664	2600	2600	3800	4.0	15	–	4665	558
2.0	9908	11113	4.7	2.5	PHQ1241_0060K914_2470 EZ701U	26779	–	44775	1482	9865347/6656	2600	2600	3800	4.0	9.9	–	4665	555
2.0	16067	19281	7.6	1.6	PHQ1241_0060K914_2470 EZ702U	33011	–	44775	1482	9865347/6656	2600	2600	3800	4.0	15	–	4665	558
2.0	22092	27850	10	1.1	PHQ1241_0060K914_2470 EZ703U	33011	–	44775	1482	9865347/6656	2600	2600	3800	4.0	23	–	4665	560
2.6	7688	8623	4.6	3.1	PHQ1241_0060K914_1920 EZ701U	20778	–	39634	1150	4710481/4096	2600	2600	3800	4.0	10	–	4665	555
2.6	12467	14960	7.4	1.9	PHQ1241_0060K914_1920 EZ702U	29221	–	39634	1150	4710481/4096	2600	2600	3800	4.0	16	–	4665	558
2.6	17142	21609	10	1.4	PHQ1241_0060K914_1920 EZ703U	29221	–	39634	1150	4710481/4096	2600	2600	3800	4.0	23	–	4665	560
3.4	5976	6703	4.5	3.8	PHQ1241_0060K914_1490 EZ701U	16152	–	35937	894.0	9154331/10240	2600	2600	3800	4.0	11	–	4665	555
3.4	9691	11629	7.3	2.3	PHQ1241_0060K914_1490 EZ702U	26496	–	35937	894.0	9154331/10240	2600	2600	3800	4.0	16	–	4665	558
3.4	13325	16798	10	1.7	PHQ1241_0060K914_1490 EZ703U	26496	–	35937	894.0	9154331/10240	2600	2600	3800	4.0	24	–	4665	560
4.0	5045	5659	4.4	4.3	PHQ1241_0060K914_1260 EZ701U	13636	–	30340	754.7	2221925/2944	2600	2600	3800	4.0	12	–	4665	555
4.0	8181	9818	7.2	2.6	PHQ1241_0060K914_1260 EZ702U	22369	–	30340	754.7	2221925/2944	2600	2600	3800	4.0	17	–	4665	558
4.0	11250	14181	9.9	1.9	PHQ1241_0060K914_1260 EZ703U	22369	–	30340	754.7	2221925/2944	2600	2600	3800	4.0	25	–	4665	560
5.3	6099	7319	8.6	2.7	PHQ1241_0060K914_0940 EZ702U	16676	–	22618	562.7	4177219/7424	2600	2600	3800	4.0	18	–	4665	558
5.3	8387	10572	12	2.0	PHQ1241_0060K914_0940 EZ703U	16676	–	22618	562.7	4177219/7424	2600	2600	3800	4.0	26	–	4665	560

14.3 Dimensional drawings

In this chapter you can find the dimensions of the geared motors.

There is a dimensional drawing for every possible shaft/housing design, each with the tables for gearbox dimensions, motor dimensions and geared motor dimensions.

Dimensions can exceed the specifications of ISO 2768-mK due to casting tolerances or accumulation of individual tolerances.

We reserve the right to make dimensional changes due to ongoing technical development.

You can download 3D models of our standard drives at https://configurator.stoeber.de/en-US/.

Combination options and the dimensions of forced ventilated geared motors can also be found at https://configurator.stoeber.de/en-US/.

14.3.1 PHQ5 – PHQ10 F shaft design (flange shaft)

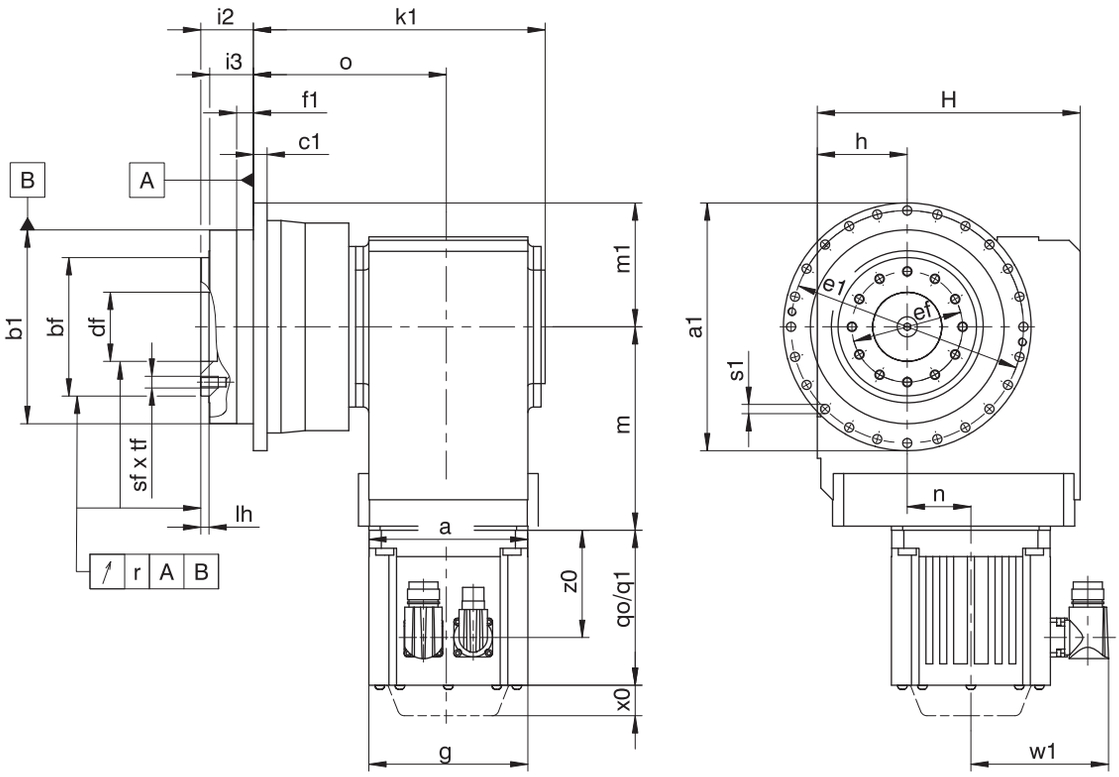

PHQ5

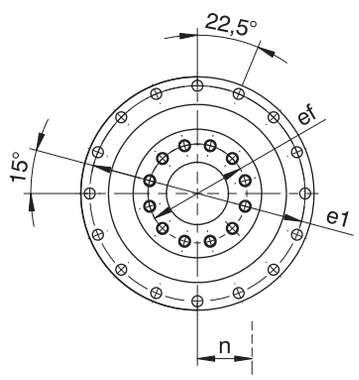

PHQ7/PHQ8

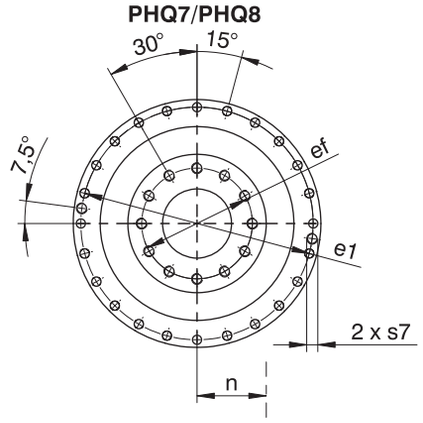

PHQ9

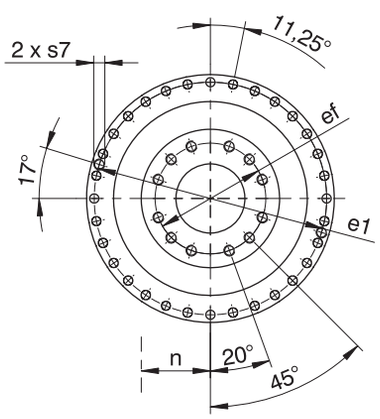

PHQ10

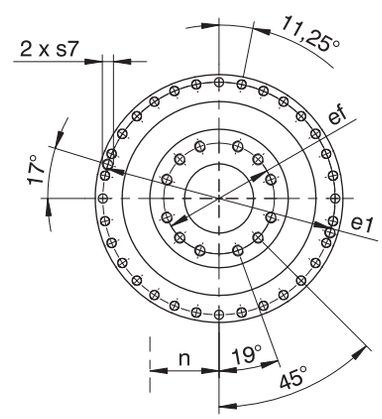

q0	Applies to motors without brake.	q1	Applies to motors with brake.
x0	Applies to encoders using an optical measuring method	w1	Different for the One Cable Solution (OCS), see the chapter [▶ 17.4]

Dimensions of gearboxes

Type	Øa1	Øb1	Øbf	c1	Ødf	Øe1	Øef	f1	h	H	i2	i3	k1	lh	m1	o	r	Øs1	s7	sf	tf
PHQ531_K102_	145	110_{h7}	80_{h7}	8	40^{H6}	135	63	12	60	160	29	23	180.0	6	72.5	124.0	0.020	5.5	–	M8	12.0
PHQ731_K202_	179	140_{h7}	100_{h7}	10	50^{H6}	168	80	12	65	190	38	32	211.0	6	89.5	141.0	0.025	6.6	–	M10	16.0
PHQ831_K402_	247	200_{h7}	160_{h7}	12	80^{H6}	233	125	15	90	240	50	42	289.0	8	123.5	199.0	0.030	9.0	M10	M12	17.0
PHQ941_K513_	300	255_{h7}	180_{h7}	18	90^{H6}	280	145	20	160	260	66	55	292.5	12	150.0	196.5	0.030	13.5	M8	M20	28.0
PHQ1041_K713_	330	285_{h7}	200_{h7}	20	95^{H6}	310	166	20	212	342	75	60	354.5	10	165.0	238.0	0.040	13.5	M10	M24	35.0

Dimensions of motors

Type	□g	q0	q1	w1	x0	z0
EZ301U	72	114.0	154.0	55.5	21	78.5
EZ302U	72	136.0	176.0	55.5	21	100.5
EZ303U	72	158.0	198.0	55.5	21	122.5
EZ401U	98	118.5	167.0	91.0	22	76.5
EZ402U	98	143.5	192.0	91.0	22	101.5
EZ404U	98	193.5	242.0	91.0	22	151.5
EZ501U	115	112.0	166.5	100.0	22	77.5
EZ502U	115	137.0	191.5	100.0	22	102.5
EZ503U	115	162.0	216.5	100.0	22	127.5
EZ505U	115	212.0	266.5	100.0	22	177.5
EZ701U	145	125.0	184.0	115.0	22	87.0
EZ702U	145	150.0	209.0	115.0	22	112.0
EZ703U	145	175.0	234.0	115.0	22	137.0
EZ705U	145	230.0	289.0	134.0	22	188.0
EZ813U	190	273.5	350.5	156.5	22	219.5
EZ815U	190	355.5	432.5	156.5	22	301.5

Dimensions of geared motors

Type	EZ3			EZ4			EZ5			EZ7			EZ8		
	a	m	n	a	m	n	a	m	n	a	m	n	a	m	n
PHQ531_K102_	□72	124	36.0	□98	124	36.0	□115	128	36.0	□145	130	36.0	–	–	–
PHQ731_K202_	□72	143	46.0	□98	143	46.0	□115	147	46.0	□145	149	46.0	–	–	–
PHQ831_K402_	–	–	–	–	–	–	∅160	187	60.0	□145	189	60.0	□190	192	60.0
PHQ941_K513_	–	–	–	–	–	–	∅160	172	15.0	□145	174	15.0	□190	177	15.0
PHQ1041_K713_	–	–	–	–	–	–	–	–	–	∅200	221	20.0	□190	224	20.0

14.3.2 PHQ11 – PHQ12 F shaft design (flange shaft)

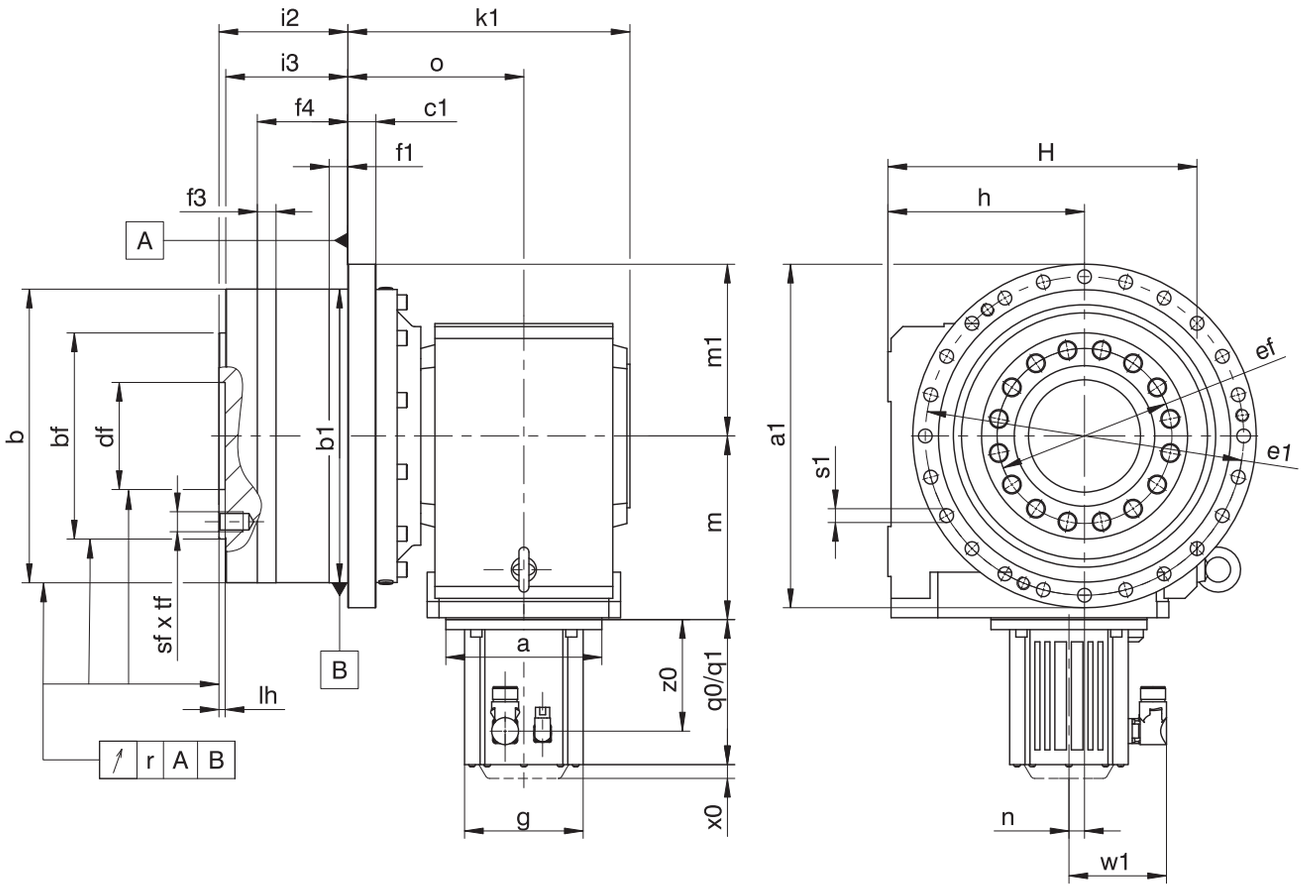

PHQ11

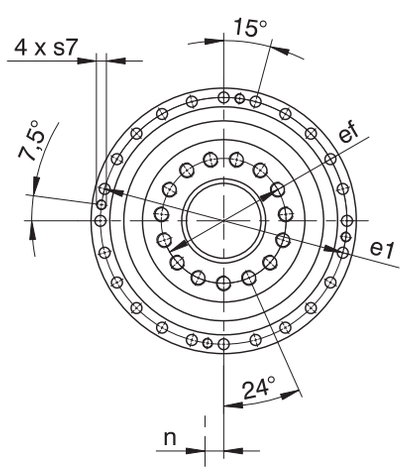

PHQ12

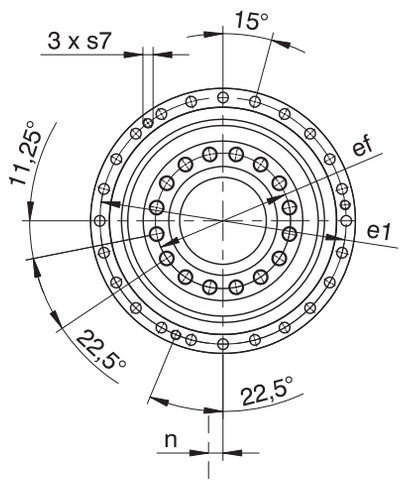

q0	Applies to motors without brake.	q1	Applies to motors with brake.
x0	Applies to encoders using an optical measuring method	w1	Different for the One Cable Solution (OCS), see the chapter [▶ 17.4]

Dimensions of gearboxes

Type	Øa1	Øb	Øb1	Øbf	c1	Ødf	Øe1	Øef	f1	f3	f4	h	H	i2	i3	k1	lh	m1	o	r	Øs1	s7	sf	tf
PHQ1141_K813_	425	365_{g6}	365_{h6}	260_{h7}	32	120^{H6}	395	200	30	30	120	265	410	190	180	381.5	10	212.5	236.5	0.040	17.5	M16	M24	35.5
PHQ1241_K913_	550	470_{g6}	470_{h6}	330_{h7}	45	180^{H7}	510	280	30	30	145	315	495	206.5	195.5	452.0	10	275.0	282.0	0.040	22.0	M16	M30	47.0
PHQ1241_K914_	550	470_{g6}	470_{h6}	330_{h7}	45	180^{H7}	510	280	30	30	145	315	495	206.5	195.5	452.0	10	275.0	282.0	0.040	22.0	M16	M30	47.0

Dimensions of motors

Type	□g	q0	q1	w1	x0	z0
EZ701U	145	125.0	184.0	115.0	22	87.0
EZ702U	145	150.0	209.0	115.0	22	112.0
EZ703U	145	175.0	234.0	115.0	22	137.0
EZ705U	145	230.0	289.0	134.0	22	188.0
EZ813U	190	273.5	350.5	156.5	22	219.5
EZ815U	190	355.5	432.5	156.5	22	301.5

Dimensions of geared motors

Type	EZ7			EZ8		
	a	m	n	a	m	n
PHQ1141_K813_	∅200	247	24	∅250	249	24
PHQ1241_K913_	–	–	–	∅250	294	25
PHQ1241_K914_	∅200	353	25	∅250	365	25

14.4 Type designation

This chapter shows you an explanation of the type designation with the associated options.

Additional ordering information not included in the type designation can be found at the end of the chapter.

Example code

PHQ	7	3	1	S	F	S	S	0055	K202VF	0115	EZ401U

Explanation

Code	Designation	Design
PHQ	Type	Planetary gearbox
7	Size	7 (example)
3 4	Generation	Generation 3 Generation 4
1	Stages	Single-stage
S	Housing	Standard
F	Shaft	Flange shaft
S V	Bearing	Standard bearing Reinforced bearing (PHQ4 – PHQ5)
S R	Backlash	Standard Reduced (PHQ4 – PHQ9)
0055	Transmission ratio of output (i x 10)	i = 5.5 (example)
K202VF	Input	K2 right-angle geared motor (example)
0115	Transmission ratio of input (i x 10 rounded)	i = 11.57 (example)
EZ401U	Motor	EZ synchronous servo motor

To complete the type designation, also specify the following in your order:

- For a detailed type designation of the motor, see the chapter [▶ 17.5]
- For the mounting position, see the chapter [▶ 14.5.3]
- Output gearbox side 3 or 4, see the chapter [▶ 14.5.3]
- Radial shaft seal rings at the output made of NBR or FKM (option), see the chapter [▶ 14.6.3]
- Position of the plug connectors, see the chapter [▶ 14.5.5]
- Reverse operation of the output shaft from ±20° to ±90° and horizontal installation, see the chapter [▶ 14.6.4]

To make selecting your geared motor easy, use our STOBER Configurator at https://configurator.stoeber.de/en-US/.

You can find a detailed description of the nameplate in the chapter [▶ 17.5.1].

14.5 Product description

14.5.1 Input options

EZ synchronous servo motor



Catalog ID 442437_en

MB motor adapter +
EZ synchronous servo motor



Catalog ID 443311_en

The corresponding catalogs can be found at http://www.stoeber.de/en/downloads/

Enter the ID of the catalog in the Search term field.

14.5.2 Installation conditions

The torque and force values listed in this catalog are valid under the following conditions:

- When the flange shaft and gear housing are fastened on the machine side using screws of strength class 12.9
- When the gear housings are adjusted at pilot øb1, and also at pilot Øb for sizes PHQ11 and PHQ12. The machine-side fit must be H7.
- When the flange shaft is adjusted using the connecting element at pilot øbf or ødf

14.5.3 Mounting positions

The following table shows the standard mounting positions.

The numbers identify the gearbox sides. The mounting position is defined by the gearbox side facing downwards.

EL1	EL2	EL3
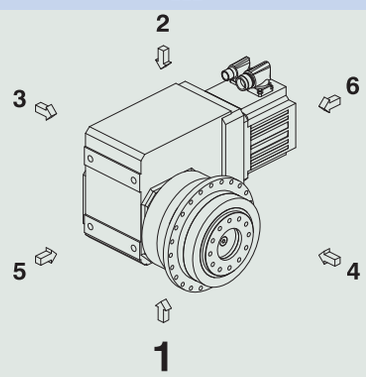	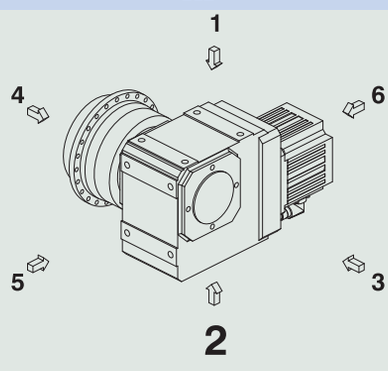	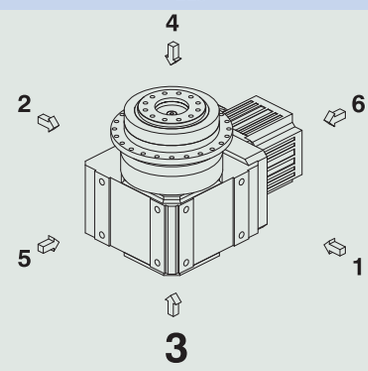
EL4	**EL5**	**EL6**
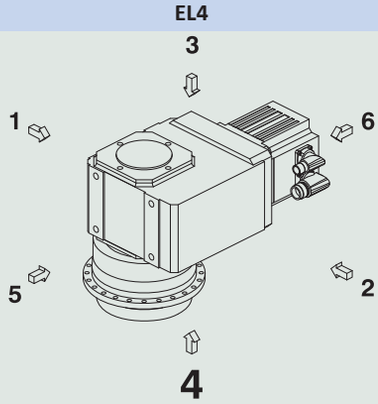	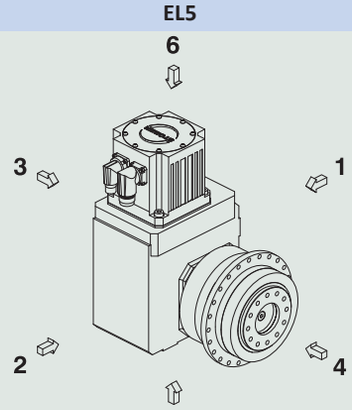	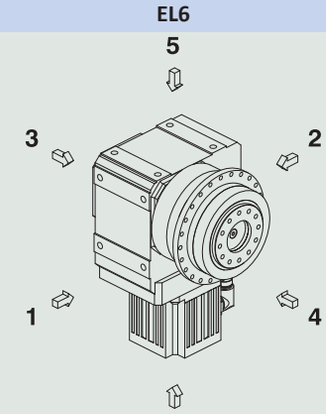

Since the lubricant filling volume of the gearbox depends on the mounting position, the mounting position must be specified when ordering.

14.5.4 Lubricants

STOBER fills the gearboxes with the amount and type of lubricant specified on the nameplate. The filling volume and the structure of the gearboxes depend on the mounting position.

Only install the gearboxes in the intended mounting position! Reposition the gearboxes only after consulting STOBER. Otherwise, STOBER assumes no liability for the gearboxes.

You will receive lubricants for use in the food industry upon request.

14.5.5 Position of the plug connectors

Mounting position EL1	Mounting position EL4
Plug connector in 270° position (standard)	Plug connector in 270° position (standard)
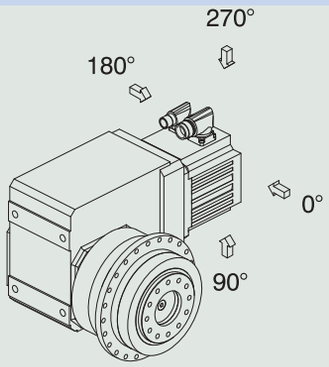	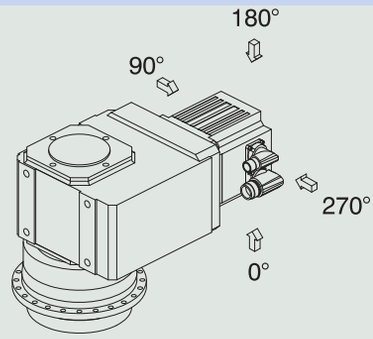

Indicate variations for your geared motor in the order.

Note that the plug connector position rotates along with the geared motor if the geared motor is in another mounting position.

14.5.6 Other product features

Feature	Value
Max. permitted gearbox temperature (on the surface of the gearbox)	≤ 90 °C
Paint	Black RAL 9005
Explosion-proof design in accordance with (ATEX) Directive 2014/34/EU (optional)	Not available
Efficiency:	
η_{get} three-stage	93%
η_{get} four-stage	92%
η_{get} five-stage	90%
Protection class:[1]	
Gearbox	IP65
Motor	IP56, optionally IP66

14.5.7 Direction of rotation

Output side 4	Output side 3
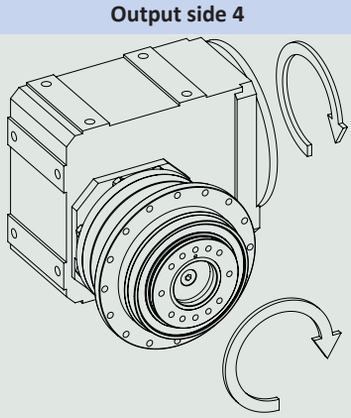	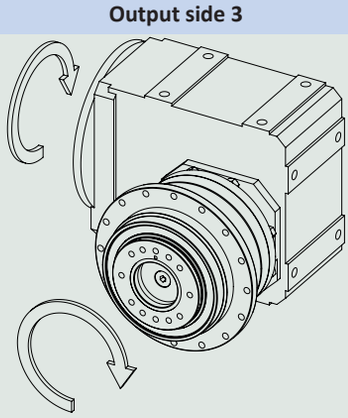

The pictures show mounting position EL1.

[1] Observe the protection class of all the components.

14.6 Project configuration

Project your drives using our SERVOsoft designing software. Download SERVOsoft free of charge after registration at https://www.stoeber.de/en/services/info-servosoft/.

It is the most convenient and reliable method of drive selection, as the entire torque/speed curve of the application is displayed and evaluated here in the curve of the geared motor.

In this chapter, only limit values for specific operating points can be taken into consideration for manual drive selection.

An explanation of the formula symbols can be found in Chapter [▷ 20.1].

The formula symbols for values actually present in the application are marked with *.

14.6.1 Drive selection

Drive selection for gearboxes

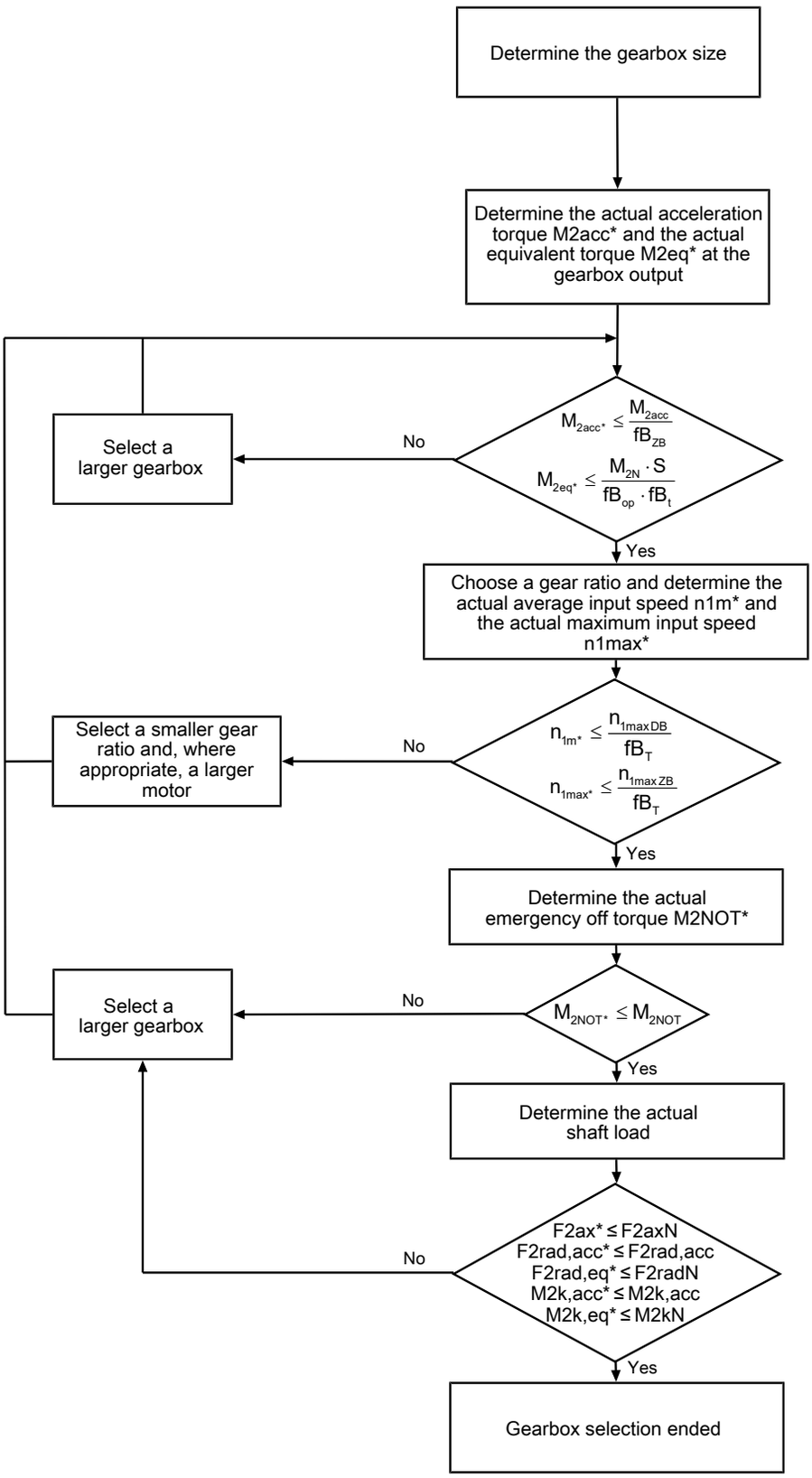

Calculate the forces and tilting torques in the chapter Permitted shaft loads.

Refer to the selection tables for the values for i, n_{1maxDB}, n_{1maxZB}, M_{2acc} (M_{2accHT} for reduced backlash), M_{2NOT}, M_{2N} and S.

The values for fB_T, fB_{op}, fB_t and fB_{ZB} can be found in the corresponding tables in this chapter.

Drive selection for motors

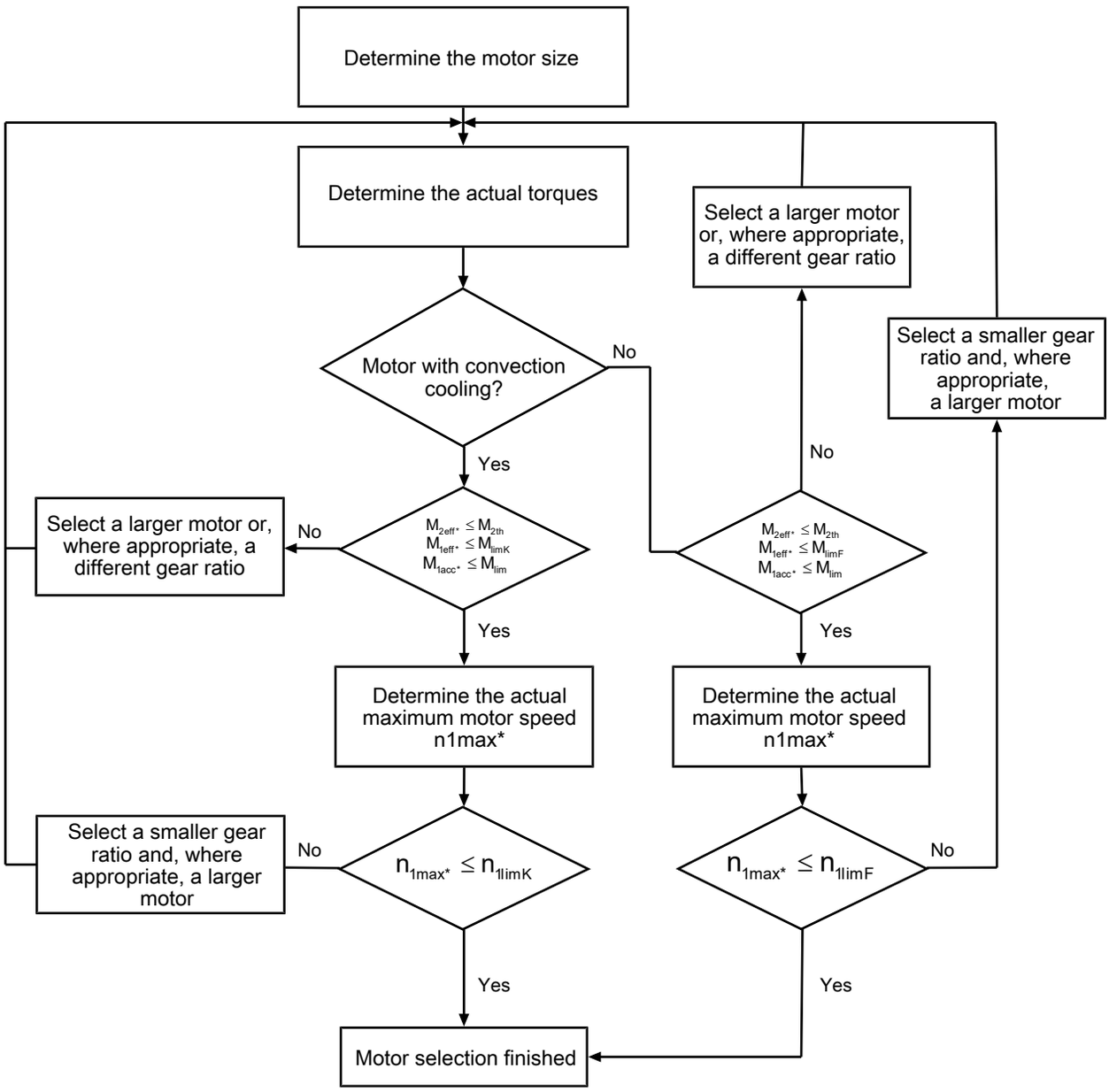

The value for M_{lim}, M_{limK}, M_{limF}, n_{1limK} and n_{1limF} can be found in the motor characteristic curve in the chapter [▷ 17.3]. Note the size, nominal speed n_N and cooling type of the motor.

Example of cyclic operation

The following calculations are based on a representation of the power taken from the output based in accordance with the following example:

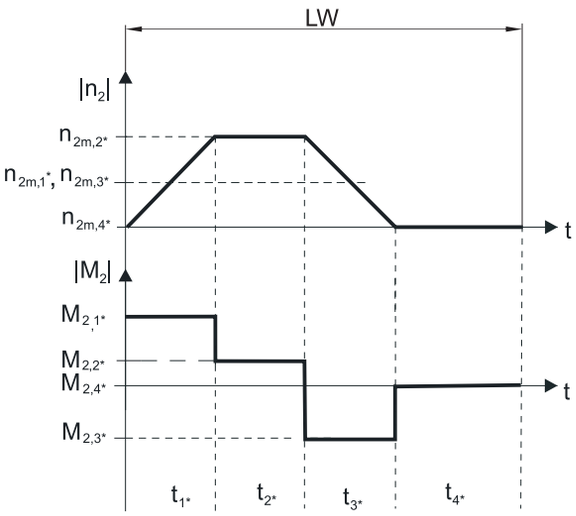

Calculation of the actual maximum acceleration torques

$$M_{2acc*} = J_{tot} \cdot \frac{\Delta n_2}{9{,}55 \cdot \Delta t} + M_{L*}$$

$$M_{1acc*} = \frac{M_{2acc*}}{i \cdot \eta_{get}} + J_1 \cdot \frac{\Delta n_1}{9{,}55 \cdot \Delta t}$$

Calculation of the actual average input speed

$$n_{1m*} = n_{2m*} \cdot i$$

$$n_{2m*} = \frac{\left|n_{2m,1*}\right| \cdot t_{1*} + \ldots + \left|n_{2m,n*}\right| \cdot t_{n*}}{t_{1*} + \ldots + t_{n*}}$$

If $t_{1*} + \ldots + t_{3*} \geq 6$ min, calculate n_{2m*} without the rest phase t_{4*}.

The values for the ratio i can be found in the selection tables.

Calculation of the actual effective torque

$$M_{2eff*} = \sqrt{\frac{t_{1*} \cdot M_{2,1*}{}^2 + \ldots + t_{n*} \cdot M_{2,n*}{}^2}{t_{1*} + \ldots + t_{n*}}}$$

Calculation of the actual emergency off torque

$$M_{2NOT*} = J_{tot} \cdot \frac{\Delta n_2}{9.55 \cdot \Delta t} + M_{L*}$$

Calculation of the actual equivalent torque

$$M_{2eq*} = \sqrt[3]{\frac{\left|n_{2m,1*}\right| \cdot t_{1*} \cdot \left|M_{2,1*}{}^3\right| + \ldots + \left|n_{2m,n*}\right| \cdot t_{n*} \cdot \left|M_{2,n*}{}^3\right|}{\left|n_{2m,1*}\right| \cdot t_{1*} + \ldots + \left|n_{2m,n*}\right| \cdot t_{n*}}}$$

Calculation of the thermal limit torque

Calculate the thermal limit torque M_{2th} for a duty cycle $ED_{10} > 50\%$ and the actual average input speed n_{1m*}. (At $K_{mot,th} \leq 0$ you must reduce the average input speed n_{1m*} accordingly or select another geared motor size.)

$$M_{2th} = M_{op} \cdot i \cdot K_{mot,th}$$

$$K_{mot,th} = 0{,}93 - \frac{a_{th}}{1000} \cdot athEL \cdot fB_T \cdot \left(\frac{n_{1m*}}{1000}\right)^2$$

The values for i and a_{th} can be found in the selection tables.

The values for a_{thEL} and fB_T can be found in the corresponding tables in this chapter.

The value for the torque of the motor at operating point M_{op} with the determined average input speed n_{1m*} can be found in the motor characteristic curve in the chapter [▶ 17.3]. Note the size, nominal speed n_N and cooling type of the motor. The figure below shows an example of reading the torque M_{op} of a motor with convection cooling at the operating point.

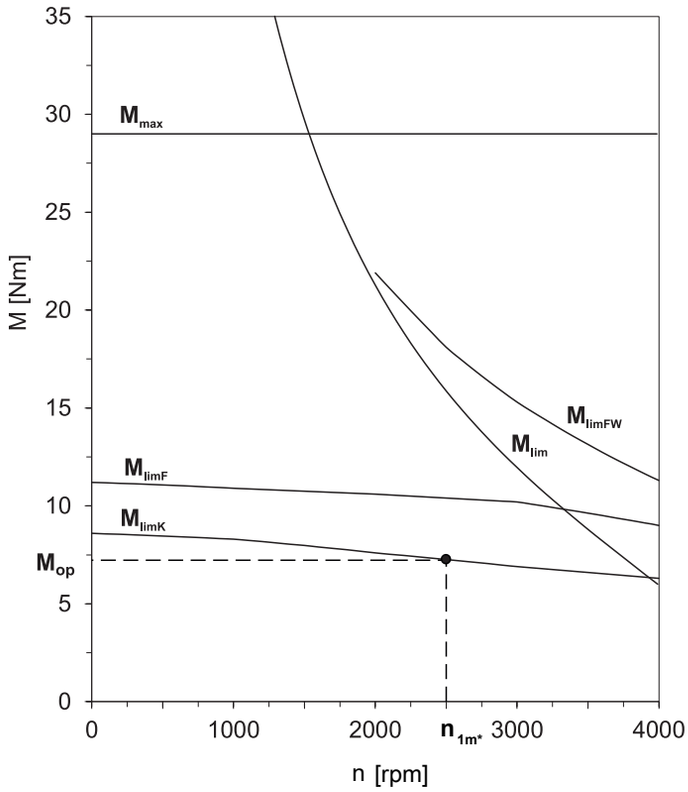

Operating factors

Parameter a_{thEL}

Mounting position	a_{thEL}
EL1, 2	1.0
EL3, 4, 5, 6	1.1

Operating mode	fB_{op}
Uniform continuous operation	1.00
Cyclic operation	1.25
Reversing load cyclic operation	1.40

Run time	fB_t
Daily runtime ≤ 8 h	1.00
Daily runtime ≤ 16 h	1.15
Daily runtime ≤ 24 h	1.20

Cyclic operation	fB_{ZB}
≤ 1000 load changes/hour (LW/h)	1.00
> 1000 load changes/hour (LW/h)	1.15

Temperature		fB_T
Motor cooling	**Surrounding temperature**	
Motor with forced ventilation	≤ 20 °C	0.9
	≤ 30 °C	1.0
	≤ 40 °C	1.15
Motor with convection cooling	≤ 20 °C	1.0
	≤ 30 °C	1.1
	≤ 40 °C	1.25

Notes

- The maximum permitted gearbox temperature (see the "Other product features" chapter) must not be exceeded. Doing so may result in damage to the geared motor.
- For braking from full speed (for example when the power fails or when setting up the machine), note the permitted gearbox torques (M_{2acc}, M_{2NOT}) in the selection tables.

14.6.2 Permitted shaft loads for the output shaft

The values specified in the tables apply to the permitted shaft loads:

- For shaft dimensions in accordance with the catalog
- For output speeds $n_{2m*} \leq 100$ rpm ($F^{2axN} = F_{2ax100}$; $F_{2radN} = F_{2rad100}$; $M_{2kN} = M_{2k100}$)
- Only if radial forces on the gearbox are stabilized by its pilots (housing, flange shaft)

Permitted shaft loads for standard bearing S

Type	z_2 [mm]	F_{2ax100} [N]	$F_{2rad100}$ [N]	$F_{2rad,acc}$ [N]	M_{2k100} [Nm]	$M_{2k,acc}$ [Nm]	C_{2k} [Nm/ arcmin]
PHQ4	83.0	2150	3095	3929	257	326	192
PHQ5	97.0	4150	4536	4897	440	475	429
PHQ7	86.0	6150	17045	17045	1466	1466	500
PHQ8	125.5	10050	27778	33333	3486	4183	1550
PHQ9	155.0	33000	48387	70968	7500	11000	7500
PHQ10	171.0	50000	51462	73099	8800	12500	9500
PHQ11	231.0	60000	47619	69264	11000	16000	11500
PHQ12	281.0	70000	64057	106761	18000	30000	14000

Permitted shaft loads for reinforced bearing V

Type	z_2 [mm]	F_{2ax100} [N]	$F_{2rad100}$ [N]	$F_{2rad,acc}$ [N]	M_{2k100} [Nm]	$M_{2k,acc}$ [Nm]	C_{2k} [Nm/ arcmin]
PHQ4	88.5	2900	4000	4000	354	354	217
PHQ5	104.0	5000	5500	5500	572	572	478

For other output speeds, download diagrams at https://configurator.stoeber.de/en-US/.

The following applies to output speeds $n_{2m*} > 100$ rpm:

$$F_{2axN} = \frac{F_{2ax100}}{\sqrt[3]{\frac{n_{2m*}}{100\ \text{rpm}}}} \qquad F_{2radN} = \frac{F_{2rad100}}{\sqrt[3]{\frac{n_{2m*}}{100\ \text{rpm}}}} \qquad M_{2kN} = \frac{M_{2k100}}{\sqrt[3]{\frac{n_{2m*}}{100\ \text{rpm}}}}$$

The values for F_{2ax100}, $F_{2rad100}$ and M_{2k100} can be found in the table "Permitted shaft loads" in this chapter.

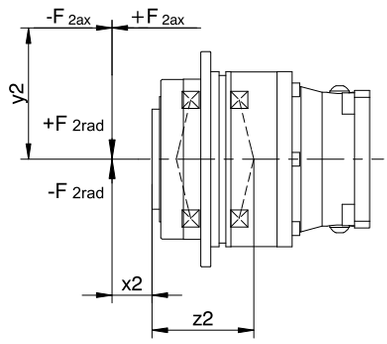

Fig. 1: Force application points

You can determine the permitted radial forces from the permitted tilting torque M_{2kN} and $M_{2k,acc}$. The actual radial forces may not exceed the permitted radial forces. The permitted radial forces pertain to the shaft end (x2 = 0).

$$M_{2k,acc^*} = \frac{2 \cdot F_{2ax^*} \cdot y_2 + F_{2rad,acc^*} \cdot (x_2 + z_2)}{1000}$$

For applications with multiple axial and/or radial forces, you must add the forces as vectors.

In the event of EMERGENCY OFF operation (max. 1000 load changes), you can multiply the permitted forces and torques for F_{2ax100}, $F_{2rad100}$ and M_{2k100} by a factor of two.

Also note the calculation for equivalent values:

$$M_{2k,eq^*} = \sqrt[3]{\frac{|n_{2m,1^*}| \cdot t_{1^*} \cdot |M_{2k,acc,1^*}^{\ 3}| + \ldots + |n_{2m,n^*}| \cdot t_{n^*} \cdot |M_{2k,acc,n^*}^{\ 3}|}{|n_{2m,1^*}| \cdot t_{1^*} + \ldots + |n_{2m,n^*}| \cdot t_{n^*}}}$$

$$F_{2rad,eq^*} = \sqrt[3]{\frac{|n_{2m,1^*}| \cdot t_{1^*} \cdot |F_{2rad,acc,1^*}^{\ 3}| + \ldots + |n_{2m,n^*}| \cdot t_{n^*} \cdot |F_{2rad,acc,n^*}^{\ 3}|}{|n_{2m,1^*}| \cdot t_{1^*} + \ldots + |n_{2m,n^*}| \cdot t_{n^*}}}$$

The following apply to the bearing service life L_{10h} (ED_{10} ≤ 40%):

L_{10h} > 10000 h with 1 < M_{2kN}/M_{2k^*} < 1.25

L_{10h} > 20000 h with 1.25 < M_{2kN}/M_{2k^*} < 1.5

L_{10h} > 30000 h with 1.5 < M_{2kN}/M_{2k^*}

For different duty cycles:

$$L_{10h} > L_{10h(ED_{10}=40\%)} \cdot \frac{40\%}{ED_{10}}$$

14.6.3 Recommendation for radial shaft seal rings

For a duty cycle > 60% and higher surrounding temperatures, we recommend radial shaft seal rings made of FKM at the output.

Properties:

- Excellent temperature resistance
- High chemical stability
- Very good resistance to aging
- Excellent resistance in oils and greases
- For use in the food, beverage and pharmaceutical industries

Leak-proofness

Our gearboxes are equipped with high-quality radial shaft seal rings and checked for leaks. However, a leak cannot be fully ruled out over the length of use of a gearbox. If you use a gearbox with goods incompatible with the lubricant, you must take measures to prevent direct contact with the gearbox lubricant in case of a leak.

14.6.4 Reverse operation

To ensure lubrication for circulating gearing parts during cyclic reverse operation from ± 20° to ± 90° at the output, pay careful attention to the position of the output shaft for the horizontal mounting of the gearbox, as shown in the diagrams below.

The images show the center position of reverse operation.

Cyclic reverse operation ≤ ± 20° on request.

PHQ4 – PHQ12

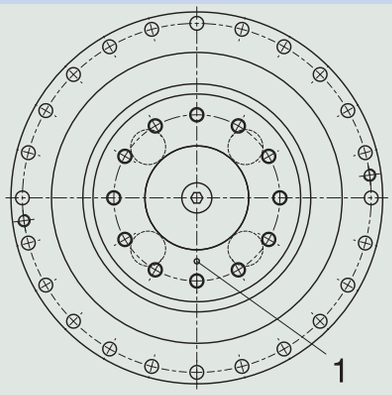

1 Position of the mark: bottom

Please note that the hole pattern may be different, depending on the size of the planetary gearbox.

14.7 Additional documentation

Additional documentation related to the product can be found at
http://www.stoeber.de/en/downloads/

Enter the ID of the documentation in the Search term field.

Documentation	ID
Operating manual gearboxes, geared motors PHQ53K – PHQ83K, PHQ94K – PHQ124K	443357_en

15 KL helical bevel geared motors

Table of contents

15.1 Overview 428

15.2 Selection tables 429

15.3 Dimensional drawings 431

15.3.1 A shaft design (hollow shaft), G housing design (pitch circle diameter) 432

15.3.2 A shaft design (hollow shaft), NG housing design (base + pitch circle diameter) 434

15.3.3 Shaft design A (hollow shaft), housing design GD (pitch circle diameter + torque arm bracket) 436

15.3.4 A shaft design (hollow shaft), F housing design (flange) 438

15.3.5 G shaft design (solid shaft without feather key), G housing design (pitch circle diameter) 440

15.3.6 G shaft design (solid shaft without feather key), NG housing design (base + pitch circle diameter) 441

15.3.7 G shaft design (solid shaft without feather key), F housing design (flange) 442

15.3.8 P shaft design (solid shaft with feather key), G housing design (pitch circle diameter) 443

15.3.9 P shaft design (solid shaft with feather key), NG housing design (base + pitch circle diameter) 444

15.3.10 P shaft design (solid shaft with feather key), F housing design (flange) 445

15.3.11 S shaft design (hollow shaft with shrink disk), G housing design (pitch circle diameter) 446

15.3.12 S shaft design (hollow shaft with shrink disk), NG housing design (base + pitch circle diameter) 448

15.3.13 Shaft design S (hollow shaft with shrink ring), housing design GD (pitch circle diameter + torque arm bracket) 450

15.3.14 S shaft design (hollow shaft with shrink disk), F housing design (flange) 452

15.4 Type designation 454

15.5 Product description 454

15.5.1 Input options 454

15.5.2 Housing design 455

15.5.3 Combinatorial shaft/housing design 455

15.5.4 Installation conditions 455

15.5.5 Gearbox sides 456

15.5.6 Lubricants 456

15.5.7 Position of the plug connectors 456

15.5.8 Other product features 456

15.5.9 Direction of rotation 457

15.6 Project configuration 457

15.6.1 Drive selection 458

15.6.2 Permitted shaft loads for the output shaft 462

15.6.3 Radial shaft seal rings 464

15.7 Additional documentation 464

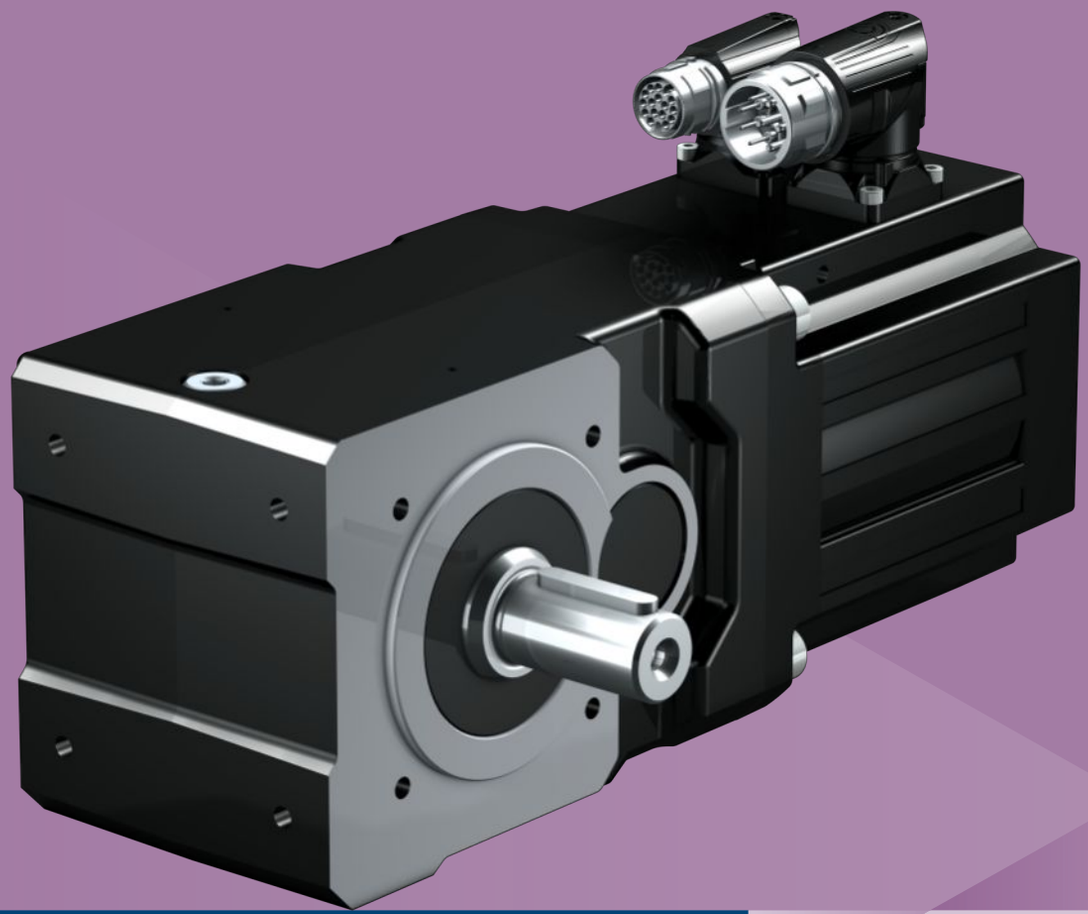

15 Helical bevel geared motors KL

15.1 Overview

Compact helical-geared right-angle geared motors

Features

Power density	★★☆☆☆
Backlash	★☆☆☆☆
Price category	€
Shaft load	★★☆☆☆
Smooth operation	★★☆☆☆
Torsional stiffness	★★☆☆☆
Mass moment of inertia	★★★★★
Helical gearing	✓
Maintenance-free	✓
Any mounting position	✓
Small installation space	✓
FKM seal ring at the input	✓
Compact and highly dynamic due to direct motor attachment	✓

Key ★☆☆☆☆ good | ★★★★★ excellent
€ Economy | €€€€€ Premium

Technical data

i	4 – 32
M_{2acc}	10 – 65 Nm
$\Delta\phi_2$	16 – 25 arcmin
η_{get}	97 %

15.2 Selection tables

The technical data specified in the selection tables applies to:

- Installation altitudes up to 1000 m above sea level
- Surrounding temperatures from 0 °C to 40 °C
- Drives with convection-cooled motors (e.g. EZ401**U**)

For the technical data on drives with forced ventilated motors (e.g. EZ401**B**), refer to https://configurator.stoeber.de/en-US/.

An explanation of the formula symbols can be found in Chapter [▷ 20.1].

n_{2N} [rpm]	M_{2N} [Nm]	$M_{2,0}$ [Nm]	a_{th}	S	Type	M_{2acc} [Nm]	M_{2NOT} [Nm]	i	i_{exakt}	n_{1maxDB} [rpm]	n_{1maxZB} [rpm]	J_1 [kgcm²]	$\Delta\varphi_2$ [arcmin]	C_2 [Nm/ arcmin]	m [kg]
KL1 (n_{1N} = 3000 min^{-1}, $M_{2acc,max}$ = 30 Nm)															
188	14	15	16	1.7	KL102_0160 EZ301U	30	60	16.00	16/1	4000	6000	0.22	20.0	1.8	6.6
188	25	26	28	1.0	KL102_0160 EZ302U	30	60	16.00	16/1	4000	6000	0.32	20.0	1.8	7.2
375	7.2	7.4	17	2.7	KL102_0080 EZ301U	22	59	8.000	8/1	3500	6000	0.28	20.0	1.8	6.6
375	12	13	29	1.6	KL102_0080 EZ302U	30	59	8.000	8/1	3500	6000	0.38	20.0	1.8	7.2
375	16	17	38	1.2	KL102_0080 EZ303U	30	59	8.000	8/1	3500	6000	0.49	20.0	1.8	7.7
750	3.6	3.7	22	3.6	KL102_0040 EZ301U	11	30	4.000	4/1	3500	6000	0.31	25.0	1.3	6.6
750	6.2	6.5	37	2.1	KL102_0040 EZ302U	19	30	4.000	4/1	3500	6000	0.41	25.0	1.3	7.2
750	8.0	8.5	49	1.6	KL102_0040 EZ303U	22	30	4.000	4/1	3500	6000	0.52	25.0	1.3	7.7
KL1 (n_{1N} = 6000 min^{-1}, $M_{2acc,max}$ = 32 Nm)															
188	12	14	11	1.5	KL102_0320 EZ202U	32	64	32.00	32/1	4000	6000	0.15	20.0	1.7	6.5
188	19	21	17	1.0	KL102_0320 EZ203U	32	64	32.00	32/1	4000	6000	0.19	20.0	1.7	6.8
375	6.2	6.8	8.8	3.2	KL102_0160 EZ202U	23	60	16.00	16/1	4000	6000	0.15	20.0	1.8	6.5
375	9.5	11	13	2.1	KL102_0160 EZ203U	30	60	16.00	16/1	4000	6000	0.19	20.0	1.8	6.8
375	14	15	20	1.4	KL102_0160 EZ301U	30	60	16.00	16/1	4000	6000	0.22	20.0	1.8	6.6
750	4.7	5.4	14	3.3	KL102_0080 EZ203U	21	59	8.000	8/1	3500	6000	0.25	20.0	1.8	6.8
750	6.9	7.4	21	2.3	KL102_0080 EZ301U	22	59	8.000	8/1	3500	6000	0.28	20.0	1.8	6.6
750	12	13	35	1.4	KL102_0080 EZ302U	30	59	8.000	8/1	3500	6000	0.38	20.0	1.8	7.2
750	15	17	46	1.0	KL102_0080 EZ303U	30	59	8.000	8/1	3500	6000	0.49	20.0	1.8	7.7
1500	2.4	2.7	18	4.4	KL102_0040 EZ203U	10	30	4.000	4/1	3500	6000	0.29	25.0	1.3	6.8
1500	3.5	3.7	26	3.0	KL102_0040 EZ301U	11	30	4.000	4/1	3500	6000	0.31	25.0	1.3	6.6
1500	5.8	6.5	45	1.8	KL102_0040 EZ302U	19	30	4.000	4/1	3500	6000	0.41	25.0	1.3	7.2
1500	7.6	8.7	58	1.4	KL102_0040 EZ303U	22	30	4.000	4/1	3500	6000	0.52	25.0	1.3	7.7
KL2 (n_{1N} = 3000 min^{-1}, $M_{2acc,max}$ = 65 Nm)															
94	29	29	11	1.6	KL202_0320 EZ301U	65	130	32.00	32/1	4000	6000	0.26	16.0	3.2	9.1
188	14	15	9.0	3.5	KL202_0160 EZ301U	43	118	16.00	16/1	4000	6000	0.28	16.0	4.0	9.1
188	25	26	15	2.0	KL202_0160 EZ302U	60	118	16.00	16/1	4000	6000	0.38	16.0	4.0	9.7
188	32	34	20	1.6	KL202_0160 EZ303U	60	118	16.00	16/1	4000	6000	0.49	16.0	4.0	10
188	43	47	27	1.2	KL202_0160 EZ401U	60	120	16.00	16/1	4000	6000	1.0	16.0	4.0	12
375	7.2	7.4	15	3.5	KL202_0080 EZ301U	22	59	8.000	8/1	4000	6000	0.31	20.0	2.4	9.1
375	12	13	26	2.0	KL202_0080 EZ302U	35	59	8.000	8/1	4000	6000	0.41	20.0	2.4	9.7
375	16	17	33	1.6	KL202_0080 EZ303U	35	59	8.000	8/1	4000	6000	0.52	20.0	2.4	10
375	22	23	29	1.8	KL202_0080 EZ401U	60	120	8.000	8/1	3500	6000	1.2	16.0	4.0	12
375	36	40	48	1.1	KL202_0080 EZ402U	60	120	8.000	8/1	3500	6000	1.9	16.0	4.0	13
750	11	12	34	2.6	KL202_0040 EZ401U	33	108	4.000	4/1	3500	6000	1.4	20.0	2.4	12
750	18	20	57	1.5	KL202_0040 EZ402U	53	108	4.000	4/1	3500	6000	2.1	20.0	2.4	13
750	27	33	84	1.0	KL202_0040 EZ404U	53	108	4.000	4/1	3500	6000	3.4	20.0	2.4	15
KL2 (n_{1N} = 6000 min^{-1}, $M_{2acc,max}$ = 65 Nm)															
188	28	29	14	1.4	KL202_0320 EZ301U	65	130	32.00	32/1	4000	6000	0.26	16.0	3.2	9.1
375	14	15	11	2.9	KL202_0160 EZ301U	43	118	16.00	16/1	4000	6000	0.28	16.0	4.0	9.1
375	23	26	18	1.7	KL202_0160 EZ302U	60	118	16.00	16/1	4000	6000	0.38	16.0	4.0	9.7
375	30	35	24	1.3	KL202_0160 EZ303U	60	118	16.00	16/1	4000	6000	0.49	16.0	4.0	10
375	36	43	28	1.1	KL202_0160 EZ401U	60	120	16.00	16/1	4000	6000	1.0	16.0	4.0	12
750	6.9	7.4	14	3.7	KL202_0080 EZ301U	22	59	8.000	8/1	4000	6000	0.31	20.0	2.4	9.1
750	12	13	24	2.2	KL202_0080 EZ302U	35	59	8.000	8/1	4000	6000	0.41	20.0	2.4	9.7
750	15	17	32	1.7	KL202_0080 EZ303U	35	59	8.000	8/1	4000	6000	0.52	20.0	2.4	10
750	18	22	30	1.8	KL202_0080 EZ401U	60	120	8.000	8/1	3500	6000	1.2	16.0	4.0	12
750	27	38	45	1.2	KL202_0080 EZ402U	60	120	8.000	8/1	3500	6000	1.9	16.0	4.0	13
1500	8.9	11	35	2.5	KL202_0040 EZ401U	33	108	4.000	4/1	3500	6000	1.4	20.0	2.4	12
1500	14	19	54	1.6	KL202_0040 EZ402U	53	108	4.000	4/1	3500	6000	2.1	20.0	2.4	13

15.3 Dimensional drawings

In this chapter you can find the dimensions of the geared motors.

There is a dimensional drawing for every possible shaft/housing design, each with the tables for gearbox dimensions, motor dimensions and geared motor dimensions.

Dimensions can exceed the specifications of ISO 2768-mK due to casting tolerances or accumulation of individual tolerances.

We reserve the right to make dimensional changes due to ongoing technical development.

You can download 3D models of our standard drives at https://configurator.stoeber.de/en-US/.

Combination options and the dimensions of forced ventilated geared motors can also be found at https://configurator.stoeber.de/en-US/.

Tolerances

Axis height in accordance with DIN 747	Tolerance
Up to 50 mm	-0.4 mm
Up to 250 mm	-0.5 mm
Up to 630 mm	-0.6 mm

Solid shaft	Tolerance
Shaft ∅ fit ≤ 50 mm	DIN 748-1, ISO k6
Shaft ∅ fit > 50 mm	DIN 748-1, ISO m6
Feather keys	DIN 6885-1, high form A

Centering holes in solid shafts in accordance with DIN 332-2, DR shape

Thread size	M4	M5	M6	M8	M10	M12	M16	M20	M24
Thread depth [mm]	10	12.5	16	19	22	28	36	42	50

Hollow shaft	Tolerance
Hollow shaft hole fit	ISO G7
Feather keys	DIN 6885-1, high form

Flange	Pilot tolerance
Up to 300 mm	ISO j6
Starting at 350 mm	ISO h6

15.3.1 A shaft design (hollow shaft), G housing design (pitch circle diameter)

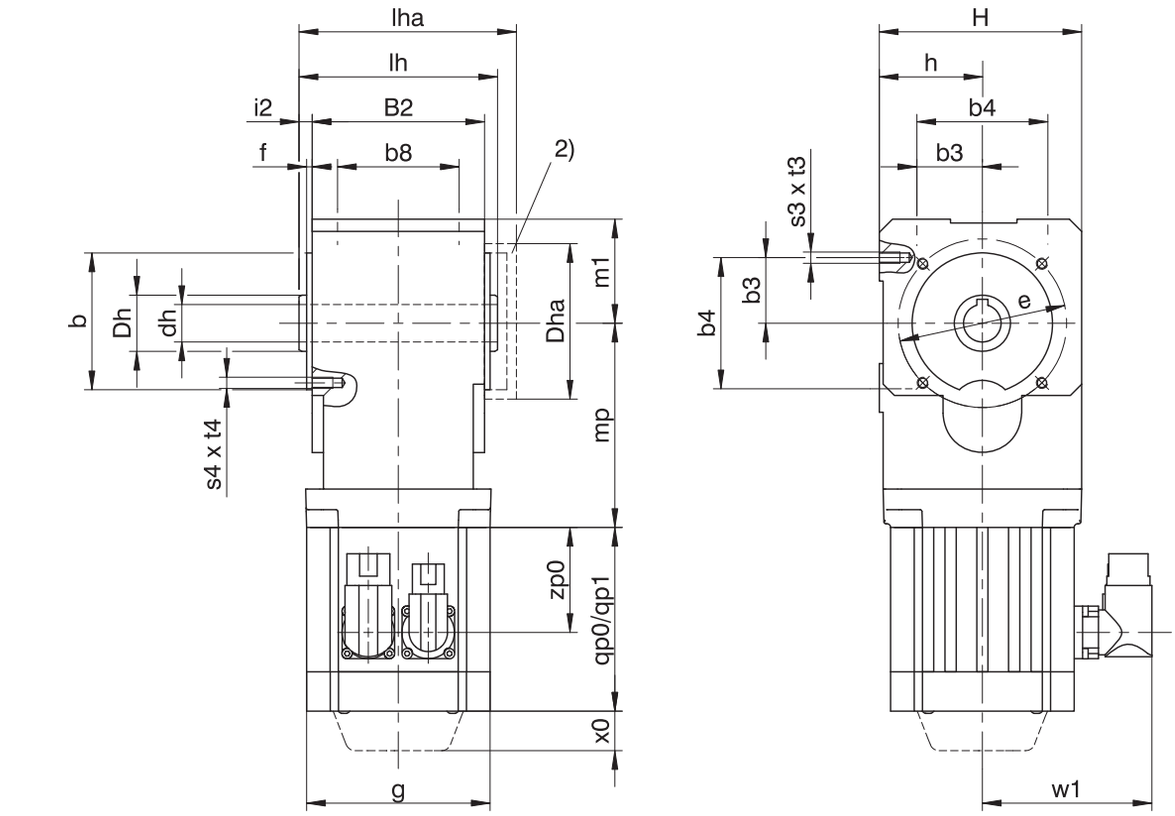

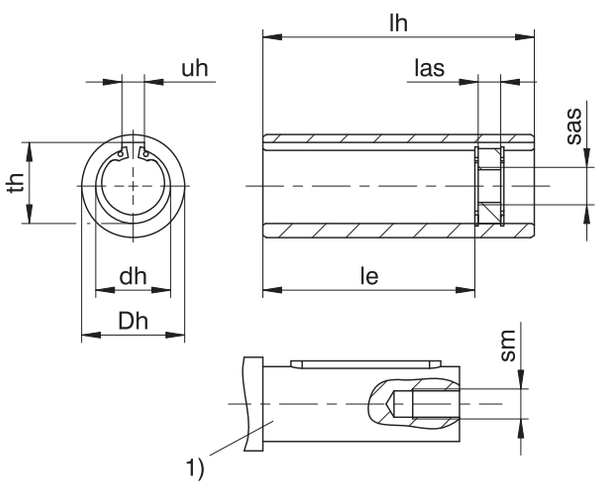

qp0	Applies to motors without brake.	qp1	Applies to motors with brake.
x0	EZ2: Applies only to motors with brake and encoders using an optical or inductive measuring method EZ3 – EZ8: Applies to encoders using an optical measuring method	w1	Different for the One Cable Solution (OCS), see the chapter [▶ 17.4]
1)	The length of the machine shaft must be at least 2.2 x ∅dh and the length of the feather key must be at least 2 x ∅dh.	2)	Cover (optional)

Dimensions of gearboxes

Type	Øb	b3	b4	b8	B2	Ødh	Dh	Dha	Øe	f	h	H	i2	le	lh	las	lha	m1	s3	s4	sm	sas	t3	t4	th	uh
KL1	60_{j6}	27.5	55	50	75	16^{H7}	25	70	75	3	46	90	6	60.5	87	12	91	46	M6	M6	M5	M6	11	11	18.3	5^{JS9}
KL2	75_{j6}	35.0	70	65	92	20^{H7}	30	80	90	3	55	108	7	79.5	106	12	110	55	M6	M6	M6	M8	13	13	22.8	6^{JS9}

Dimensions of motors

Type	□g	qp0	qp1	w1	x0	zp0
EZ202U	55	141	150.0	47.0	25	86.0
EZ203U	55	159	168.0	47.0	25	104.0
EZ301U	72	90	130.0	55.5	21	54.5
EZ302U	72	112	152.0	55.5	21	76.5
EZ303U	72	134	174.0	55.5	21	98.5
EZ401U	98	98	146.5	91.0	22	56.0
EZ402U	98	123	171.5	91.0	22	81.0
EZ404U	98	173	221.5	91.0	22	131.0

Dimensions of geared motors

Type	EZ2	EZ3	EZ4
	mp	mp	mp
KL102	78.5	95.5	–
KL202	–	112.5	109.0

15.3.2 A shaft design (hollow shaft), NG housing design (base + pitch circle diameter)

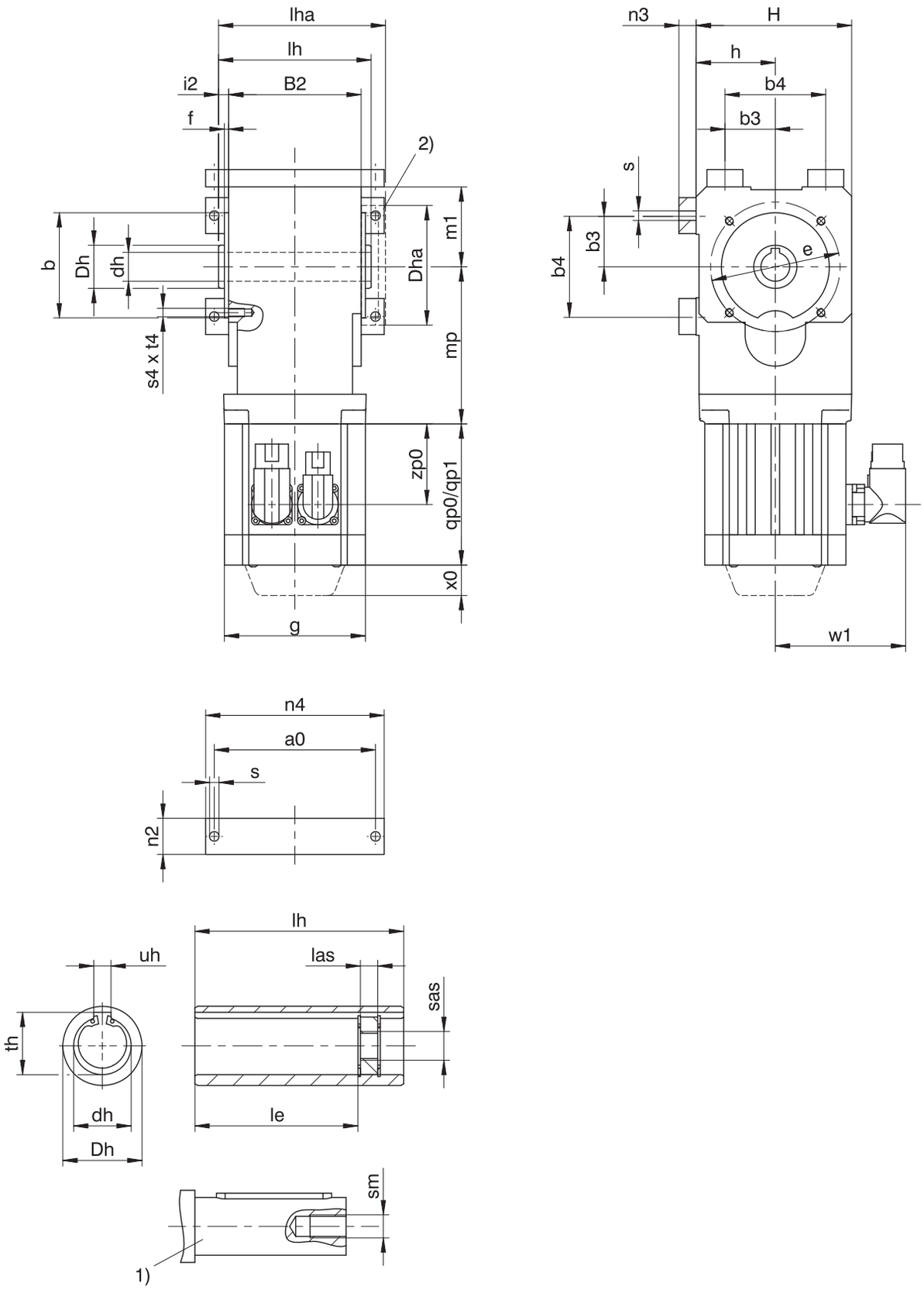

qp0	Applies to motors without brake.	qp1	Applies to motors with brake.
x0	EZ2: Applies only to motors with brake and encoders using an optical or inductive measuring method EZ3 – EZ8: Applies to encoders using an optical measuring method	w1	Different for the One Cable Solution (OCS), see the chapter [▶ 17.4]
1)	The length of the machine shaft must be at least 2.2 x ∅dh and the length of the feather key must be at least 2 x ∅dh.	2)	Cover (optional)

Dimensions of gearboxes

Type	a0	Øb	b3	b4	B2	Ødh	Dh	Dha	Øe	f	h	H	i2	le	lh	las	lha	m1	n2	n3	n4	Øs	s4	sm	sas	t4	th	uh
KL1	95	60_{j6}	27.5	55	75	16^{H7}	25	70	75	3	46	90	6	60.5	87	12	91	46	20	12	107	6.6	M6	M5	M6	11	18.3	5^{JS9}
KL2	112	75_{j6}	35.0	70	92	20^{H7}	30	80	90	3	55	108	7	79.5	106	12	110	55	25	12	124	6.6	M6	M6	M8	13	22.8	6^{JS9}

Dimensions of motors

Type	□g	qp0	qp1	w1	x0	zp0
EZ202U	55	141	150.0	47.0	25	86.0
EZ203U	55	159	168.0	47.0	25	104.0
EZ301U	72	90	130.0	55.5	21	54.5
EZ302U	72	112	152.0	55.5	21	76.5
EZ303U	72	134	174.0	55.5	21	98.5
EZ401U	98	98	146.5	91.0	22	56.0
EZ402U	98	123	171.5	91.0	22	81.0
EZ404U	98	173	221.5	91.0	22	131.0

Dimensions of geared motors

Type	EZ2	EZ3	EZ4
	mp	mp	mp
KL102	78.5	95.5	–
KL202	–	112.5	109.0

15.3.3 Shaft design A (hollow shaft), housing design GD (pitch circle diameter + torque arm bracket)

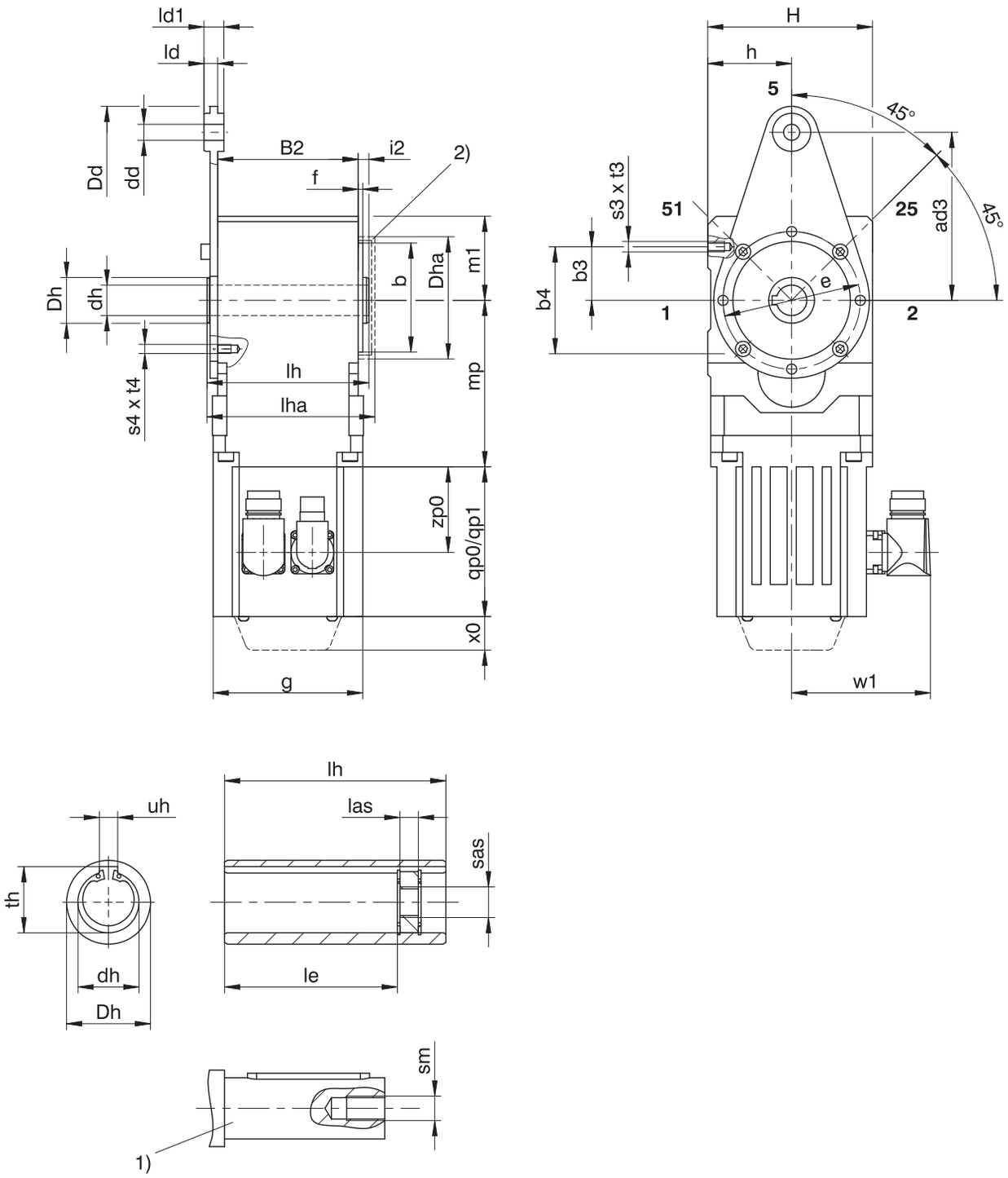

qp0	Applies to motors without brake.	qp1	Applies to motors with brake.
x0	EZ2: Applies only to motors with brake and encoders using an optical or inductive measuring method EZ3 – EZ8: Applies to encoders using an optical measuring method	w1	Different for the One Cable Solution (OCS), see the chapter [▶ 17.4]
1)	The length of the machine shaft must be at least 2.2 x ∅dh and the length of the feather key must be at least 2 x ∅dh.	2)	Cover (optional)

Dimensions of gearboxes

Type	ad3	Øb	b3	b4	B2	Ødd	Ødh	ØDd	ØDh	ØDha	Øe	f	h	H	i2	le	lh	las	ld	ld1	lha	m1	s3	s4	sm	sas	t3	t4	th	uh
KL2	110	75_{j6}	35	70	92	10.5	20^{H7}	34	30	80	90	3	55	108	7	79.5	106	12	9	13	110	55	M6	M6	M6	M8	13	13	22.8	6^{JS9}

Dimensions of motors

Type	□g	qp0	qp1	w1	x0	zp0
EZ202U	55	141	150.0	47.0	25	86.0
EZ203U	55	159	168.0	47.0	25	104.0
EZ301U	72	90	130.0	55.5	21	54.5
EZ302U	72	112	152.0	55.5	21	76.5
EZ303U	72	134	174.0	55.5	21	98.5
EZ401U	98	98	146.5	91.0	22	56.0
EZ402U	98	123	171.5	91.0	22	81.0
EZ404U	98	173	221.5	91.0	22	131.0

Dimensions of geared motors

Type	EZ3	EZ4
	mp	mp
KL202	112.5	109.0

15.3.4 A shaft design (hollow shaft), F housing design (flange)

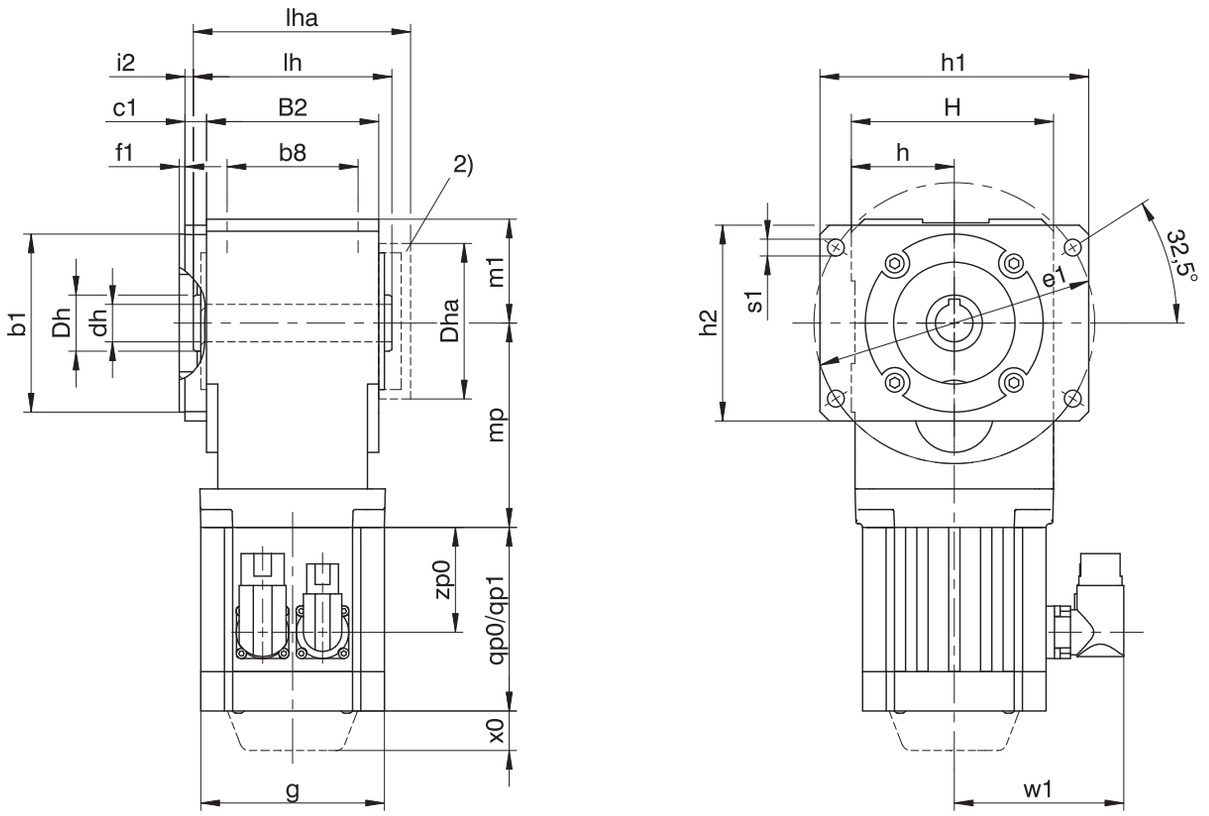

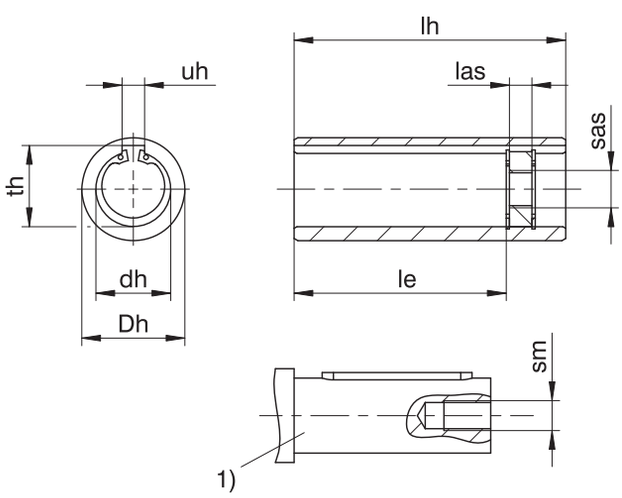

qp0	Applies to motors without brake.	qp1	Applies to motors with brake.
x0	EZ2: Applies only to motors with brake and encoders using an optical or inductive measuring method EZ3 – EZ8: Applies to encoders using an optical measuring method	w1	Different for the One Cable Solution (OCS), see the chapter [▶ 17.4]
1)	The length of the machine shaft must be at least 2.2 x ∅dh and the length of the feather key must be at least 2 x ∅dh.	2)	Cover (optional)

Dimensions of gearboxes

Type	Ø$b1$	$b8$	$B2$	$c1$	Ødh	Dh	Dha	Ø$e1$	$f1$	h	$h1$	$h2$	H	$i2$	le	lh	las	lha	$m1$	Ø$s1$	sm	sas	th	uh
KL1	60_{j6}	50	75	11.5	16^{H7}	25	70	130	3	46	128.5	88.5	90	5.5	60.5	87	12	91	46	9	M5	M6	18.3	5^{JS9}
KL2	95_{j6}	65	92	11.5	20^{H7}	30	80	150	3	55	143.5	104.5	108	4.5	79.5	106	12	110	55	9	M6	M8	22.8	6^{JS9}

Dimensions of motors

Type	□g	$qp0$	$qp1$	$w1$	$x0$	$zp0$
EZ202U	55	141	150.0	47.0	25	86.0
EZ203U	55	159	168.0	47.0	25	104.0
EZ301U	72	90	130.0	55.5	21	54.5
EZ302U	72	112	152.0	55.5	21	76.5
EZ303U	72	134	174.0	55.5	21	98.5
EZ401U	98	98	146.5	91.0	22	56.0
EZ402U	98	123	171.5	91.0	22	81.0
EZ404U	98	173	221.5	91.0	22	131.0

Dimensions of geared motors

Type	EZ2	EZ3	EZ4
	mp	mp	mp
KL102	78.5	95.5	–
KL202	–	112.5	109.0

15.3.5 G shaft design (solid shaft without feather key), G housing design (pitch circle diameter)

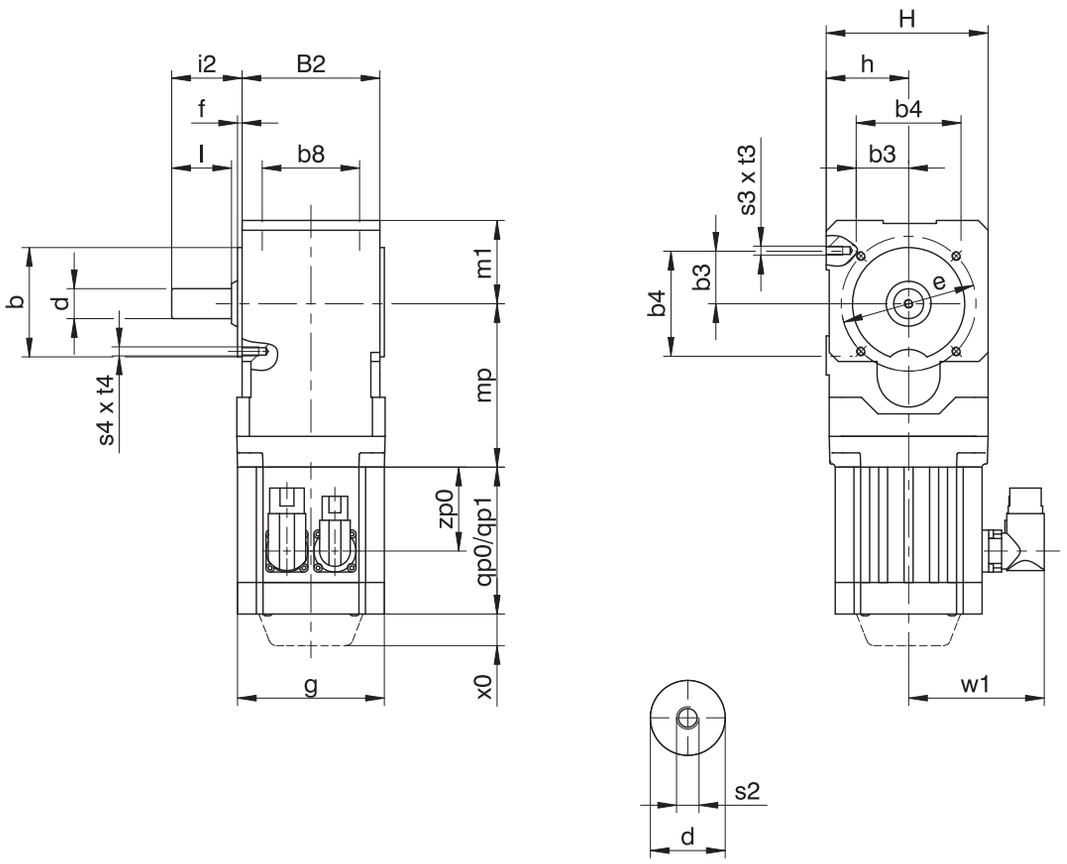

qp0	Applies to motors without brake.	qp1	Applies to motors with brake.
x0	EZ2: Applies only to motors with brake and encoders using an optical or inductive measuring method EZ3 – EZ8: Applies to encoders using an optical measuring method	w1	Different for the One Cable Solution (OCS), see the chapter [▶ 17.4]

Dimensions of gearboxes

Type	Øb	b3	b4	b8	B2	Ød	Øe	f	h	H	i2	l	m1	s2	s3	s4	t3	t4
KL1	60_{j6}	27.5	55	50	75	16_{k6}	75	3	46	90	38	32	46	M5	M6	M6	11	11
KL2	75_{j6}	35.0	70	65	92	20_{k6}	90	3	55	108	47	40	55	M6	M6	M6	13	13

Dimensions of motors

Type	□g	qp0	qp1	w1	x0	zp0
EZ202U	55	141	150.0	47.0	25	86.0
EZ203U	55	159	168.0	47.0	25	104.0
EZ301U	72	90	130.0	55.5	21	54.5
EZ302U	72	112	152.0	55.5	21	76.5
EZ303U	72	134	174.0	55.5	21	98.5
EZ401U	98	98	146.5	91.0	22	56.0
EZ402U	98	123	171.5	91.0	22	81.0
EZ404U	98	173	221.5	91.0	22	131.0

Dimensions of geared motors

Type	EZ2 mp	EZ3 mp	EZ4 mp
KL102	78.5	95.5	–
KL202	–	112.5	109.0

15.3.6 G shaft design (solid shaft without feather key), NG housing design (base + pitch circle diameter)

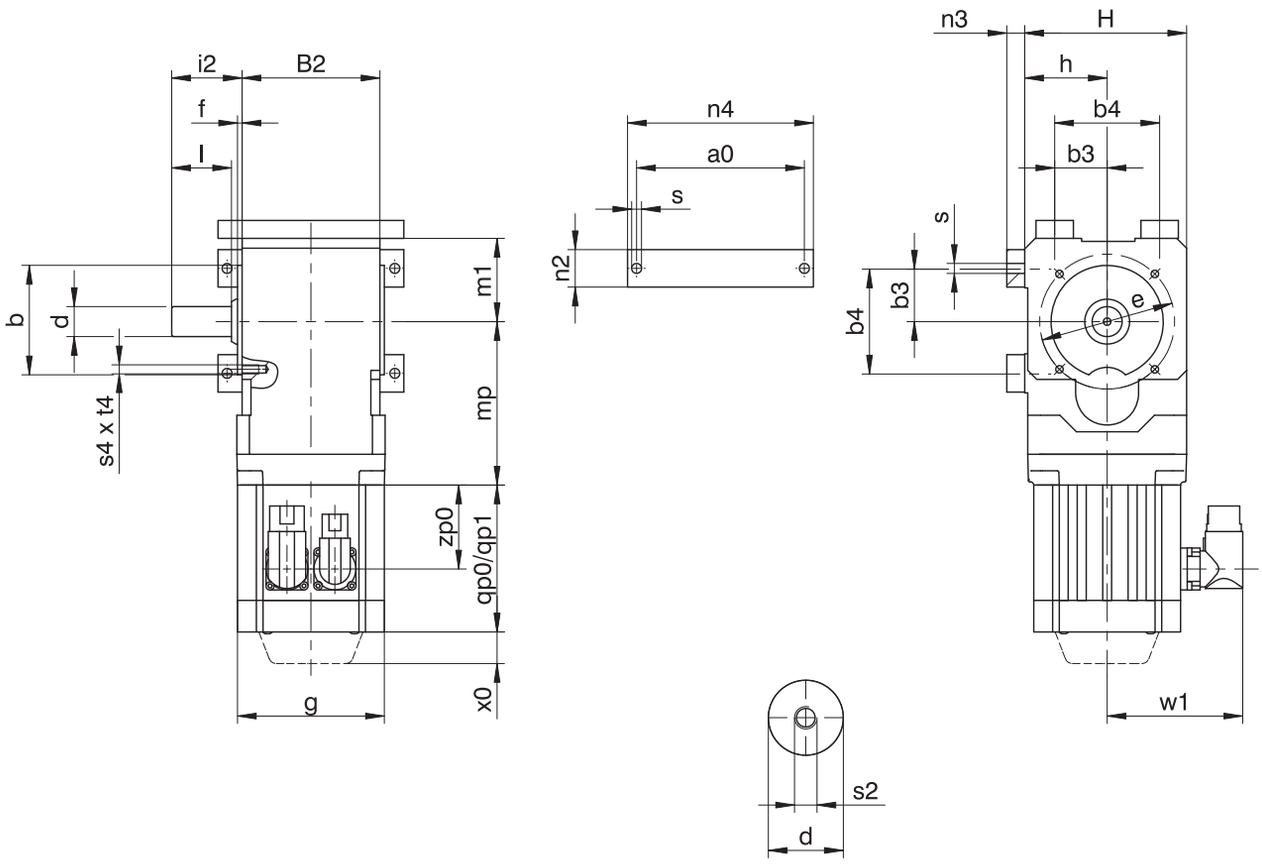

qp0	Applies to motors without brake.	qp1	Applies to motors with brake.
x0	EZ2: Applies only to motors with brake and encoders using an optical or inductive measuring method EZ3 – EZ8: Applies to encoders using an optical measuring method	w1	Different for the One Cable Solution (OCS), see the chapter [▶ 17.4]

Dimensions of gearboxes

Type	a0	Øb	b3	b4	B2	Ød	Øe	f	h	H	i2	l	m1	n2	n3	n4	Øs	s2	s4	t4
KL1	95	60_{j6}	27.5	55	75	16_{k6}	75	3	46	90	38	32	46	20	12	107	6.6	M5	M6	11
KL2	112	75_{j6}	35.0	70	92	20_{k6}	90	3	55	108	47	40	55	25	12	124	6.6	M6	M6	13

Dimensions of motors

Type	□g	qp0	qp1	w1	x0	zp0
EZ202U	55	141	150.0	47.0	25	86.0
EZ203U	55	159	168.0	47.0	25	104.0
EZ301U	72	90	130.0	55.5	21	54.5
EZ302U	72	112	152.0	55.5	21	76.5
EZ303U	72	134	174.0	55.5	21	98.5
EZ401U	98	98	146.5	91.0	22	56.0
EZ402U	98	123	171.5	91.0	22	81.0
EZ404U	98	173	221.5	91.0	22	131.0

Dimensions of geared motors

Type	EZ2 mp	EZ3 mp	EZ4 mp
KL102	78.5	95.5	–
KL202	–	112.5	109.0

15.3.7 G shaft design (solid shaft without feather key), F housing design (flange)

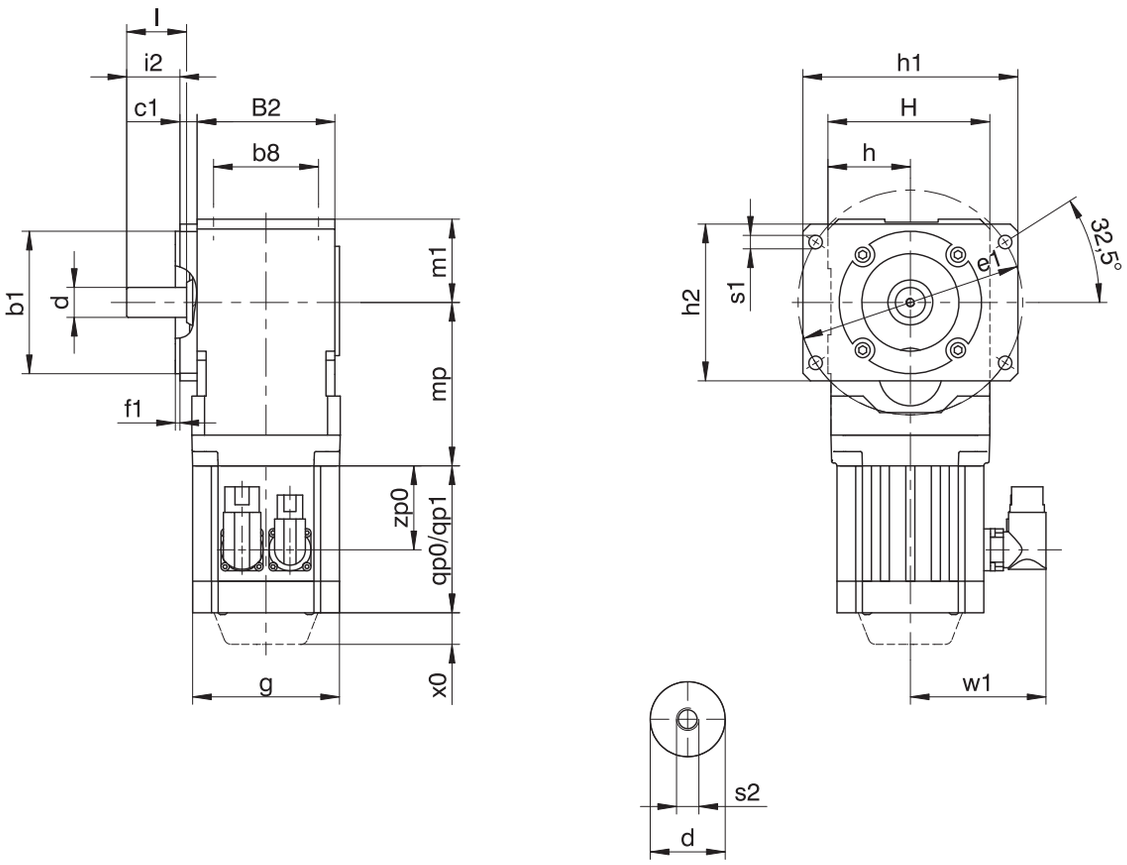

qp0	Applies to motors without brake.	qp1	Applies to motors with brake.
x0	EZ2: Applies only to motors with brake and encoders using an optical or inductive measuring method EZ3 – EZ8: Applies to encoders using an optical measuring method	w1	Different for the One Cable Solution (OCS), see the chapter [▶ 17.4]

Dimensions of gearboxes

Type	Øb1	b8	B2	c1	Ød	Øe1	f1	h	h1	h2	H	i2	l	m1	Øs1	s2
KL1	60_{j6}	50	75	11.5	16_{k6}	130	3	46	128.5	88.5	90	26.5	32	46	9	M5
KL2	95_{j6}	65	92	11.5	20_{k6}	150	3	55	143.5	104.5	108	35.5	40	55	9	M6

Dimensions of motors

Type	□g	qp0	qp1	w1	x0	zp0
EZ202U	55	141	150.0	47.0	25	86.0
EZ203U	55	159	168.0	47.0	25	104.0
EZ301U	72	90	130.0	55.5	21	54.5
EZ302U	72	112	152.0	55.5	21	76.5
EZ303U	72	134	174.0	55.5	21	98.5
EZ401U	98	98	146.5	91.0	22	56.0
EZ402U	98	123	171.5	91.0	22	81.0
EZ404U	98	173	221.5	91.0	22	131.0

Dimensions of geared motors

Type	EZ2	EZ3	EZ4
	mp	mp	mp
KL102	78.5	95.5	–
KL202	–	112.5	109.0

15.3.8 P shaft design (solid shaft with feather key), G housing design (pitch circle diameter)

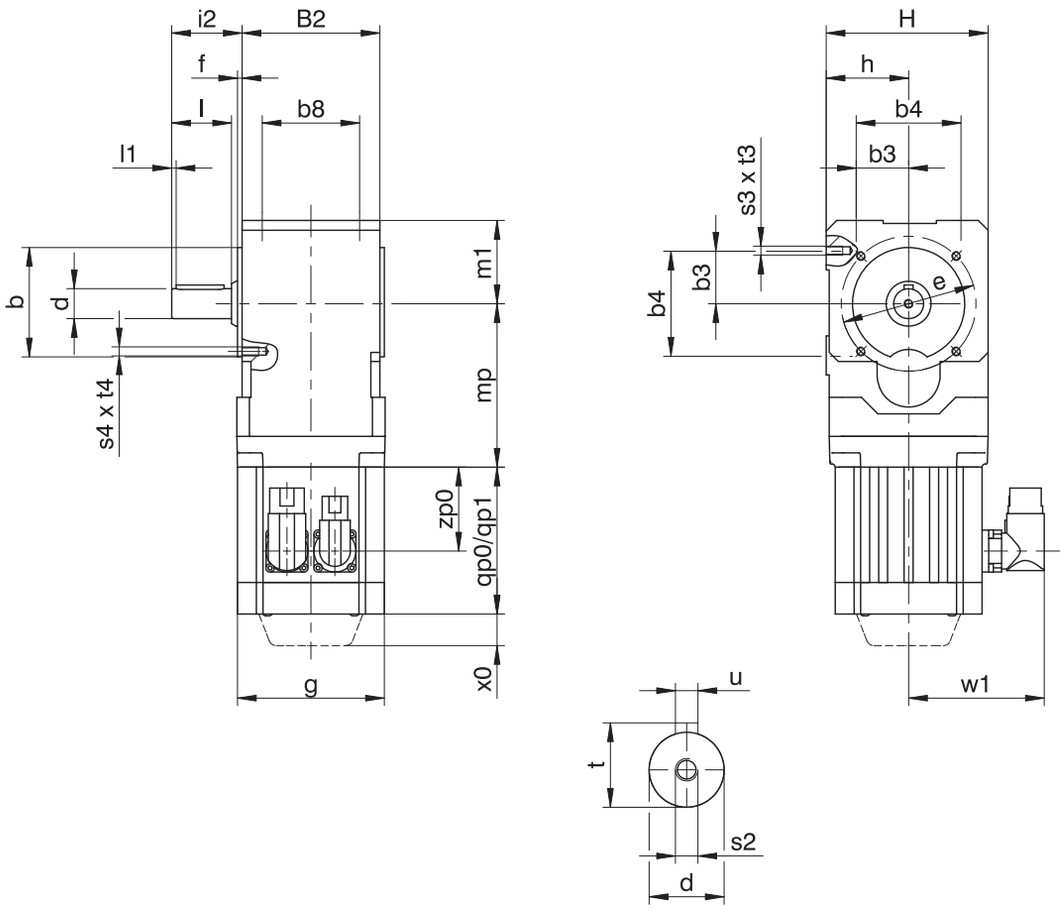

qp0	Applies to motors without brake.	qp1	Applies to motors with brake.
x0	EZ2: Applies only to motors with brake and encoders using an optical or inductive measuring method EZ3 – EZ8: Applies to encoders using an optical measuring method	w1	Different for the One Cable Solution (OCS), see the chapter [▶ 17.4]

Dimensions of gearboxes

Type	Øb	b3	b4	b8	B2	Ød	Øe	f	h	H	i2	l	l1	m1	s2	s3	s4	t	t3	t4	u
KL1	60_{j6}	27.5	55	50	75	16_{k6}	75	3	46	90	38	32	3	46	M5	M6	M6	18	11	11	A5×5×22
KL2	75_{j6}	35.0	70	65	92	20_{k6}	90	3	55	108	47	40	3	55	M6	M6	M6	22.5	13	13	A6×6×32

Dimensions of motors

Type	□g	qp0	qp1	w1	x0	zp0
EZ202U	55	141	150.0	47.0	25	86.0
EZ203U	55	159	168.0	47.0	25	104.0
EZ301U	72	90	130.0	55.5	21	54.5
EZ302U	72	112	152.0	55.5	21	76.5
EZ303U	72	134	174.0	55.5	21	98.5
EZ401U	98	98	146.5	91.0	22	56.0
EZ402U	98	123	171.5	91.0	22	81.0
EZ404U	98	173	221.5	91.0	22	131.0

Dimensions of geared motors

Type	EZ2	EZ3	EZ4
	mp	mp	mp
KL102	78.5	95.5	–
KL202	–	112.5	109.0

15.3.9 P shaft design (solid shaft with feather key), NG housing design (base + pitch circle diameter)

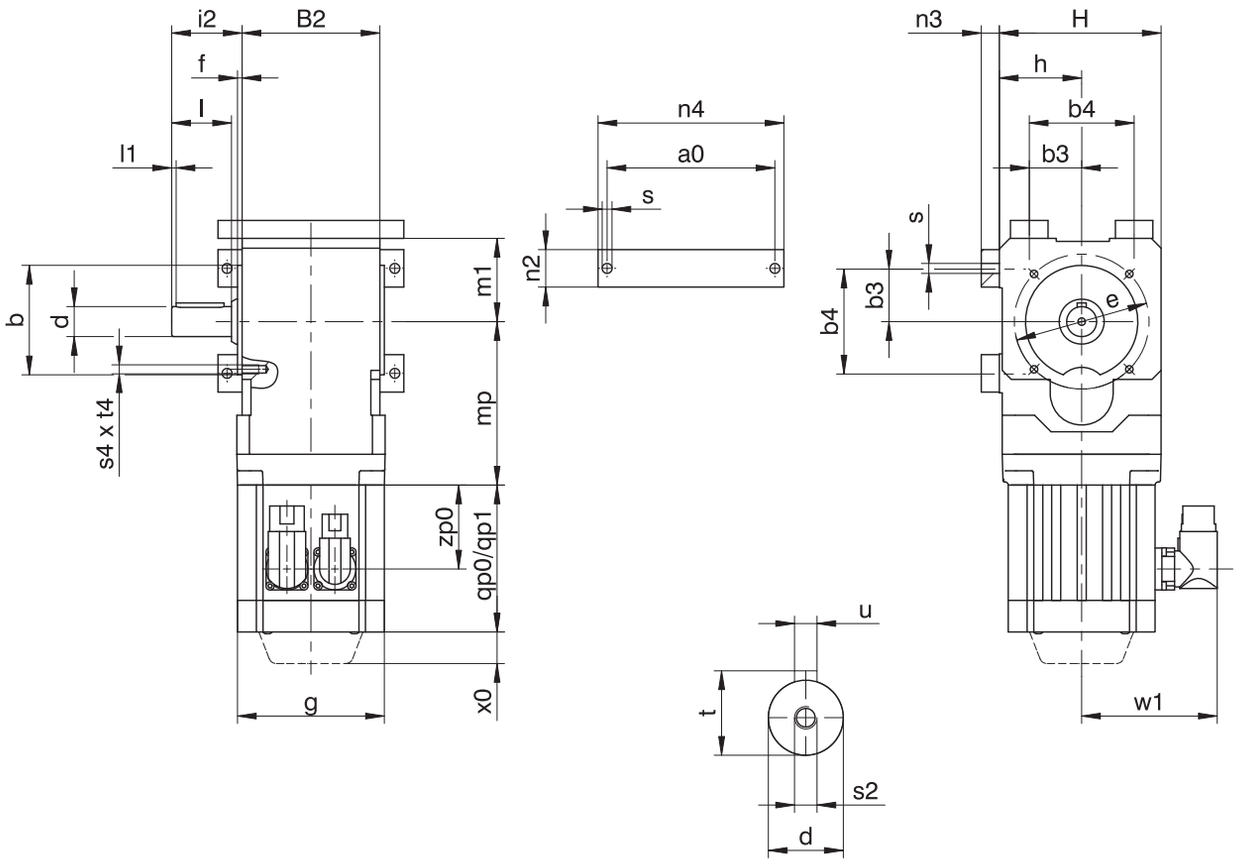

qp0	Applies to motors without brake.	qp1	Applies to motors with brake.
x0	EZ2: Applies only to motors with brake and encoders using an optical or inductive measuring method EZ3 – EZ8: Applies to encoders using an optical measuring method	w1	Different for the One Cable Solution (OCS), see the chapter [▶ 17.4]

Dimensions of gearboxes

Type	a0	Øb	b3	b4	B2	Ød	Øe	f	h	H	i2	l	l1	m1	n2	n3	n4	Øs	s2	s4	t	t4	u
KL1	95	60_{j6}	27.5	55	75	16_{k6}	75	3	46	90	38	32	3	46	20	12	107	6.6	M5	M6	18.0	11	A5×5×22
KL2	112	75_{j6}	35.0	70	92	20_{k6}	90	3	55	108	47	40	3	55	25	12	124	6.6	M6	M6	22.5	13	A6×6×32

Dimensions of motors

Type	□g	qp0	qp1	w1	x0	zp0
EZ202U	55	141	150.0	47.0	25	86.0
EZ203U	55	159	168.0	47.0	25	104.0
EZ301U	72	90	130.0	55.5	21	54.5
EZ302U	72	112	152.0	55.5	21	76.5
EZ303U	72	134	174.0	55.5	21	98.5
EZ401U	98	98	146.5	91.0	22	56.0
EZ402U	98	123	171.5	91.0	22	81.0
EZ404U	98	173	221.5	91.0	22	131.0

Dimensions of geared motors

Type	EZ2 mp	EZ3 mp	EZ4 mp
KL102	78.5	95.5	–
KL202	–	112.5	109.0

15.3.10 P shaft design (solid shaft with feather key), F housing design (flange)

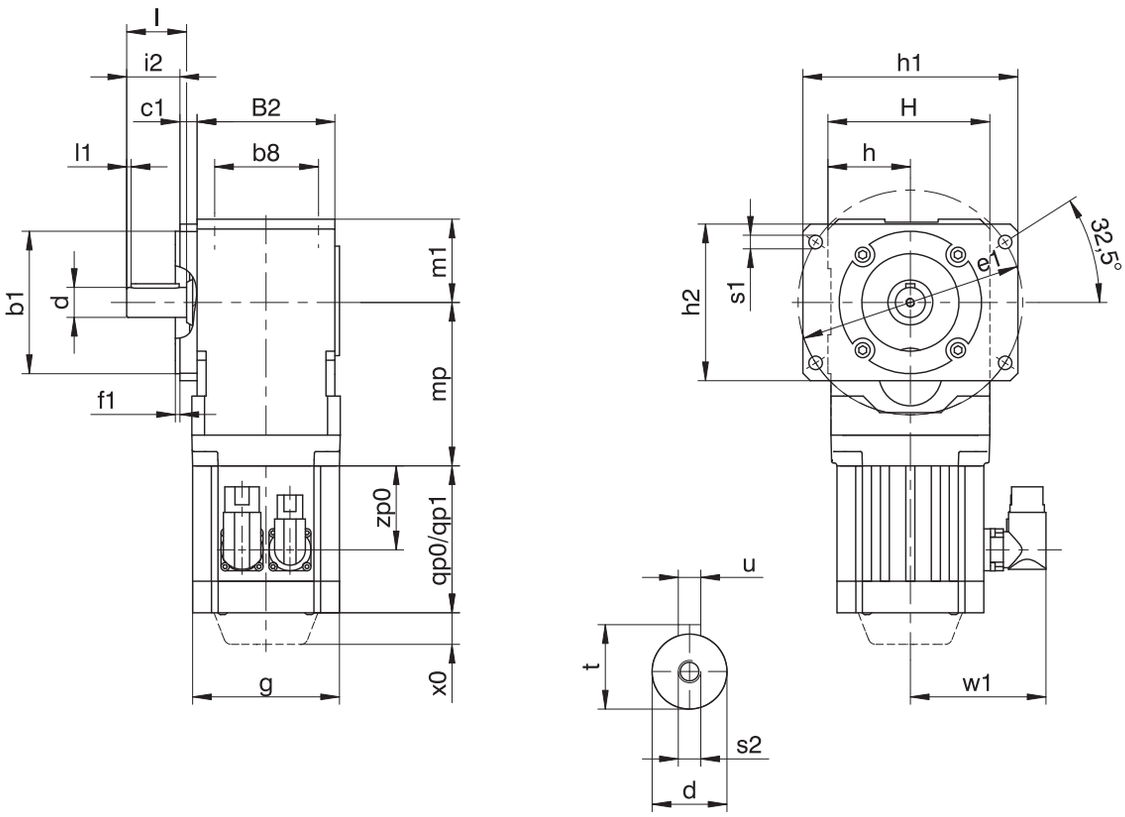

qp0	Applies to motors without brake.	qp1	Applies to motors with brake.
x0	EZ2: Applies only to motors with brake and encoders using an optical or inductive measuring method EZ3 – EZ8: Applies to encoders using an optical measuring method	w1	Different for the One Cable Solution (OCS), see the chapter [▶ 17.4]

Dimensions of gearboxes

Type	Øb1	b8	B2	c1	Ød	Øe1	f1	h	h1	h2	H	i2	l	l1	m1	Øs1	s2	t	u
KL1	60_{j6}	50	75	11.5	16_{k6}	130	3	46	128.5	88.5	90	26.5	32	3	46	9	M5	18.0	A5×5×22
KL2	95_{j6}	65	92	11.5	20_{k6}	150	3	55	143.5	104.5	108	35.5	40	3	55	9	M6	22.5	A6×6×32

Dimensions of motors

Type	□g	qp0	qp1	w1	x0	zp0
EZ202U	55	141	150.0	47.0	25	86.0
EZ203U	55	159	168.0	47.0	25	104.0
EZ301U	72	90	130.0	55.5	21	54.5
EZ302U	72	112	152.0	55.5	21	76.5
EZ303U	72	134	174.0	55.5	21	98.5
EZ401U	98	98	146.5	91.0	22	56.0
EZ402U	98	123	171.5	91.0	22	81.0
EZ404U	98	173	221.5	91.0	22	131.0

Dimensions of geared motors

Type	EZ2 mp	EZ3 mp	EZ4 mp
KL102	78.5	95.5	–
KL202	–	112.5	109.0

15.3.11 S shaft design (hollow shaft with shrink disk), G housing design (pitch circle diameter)

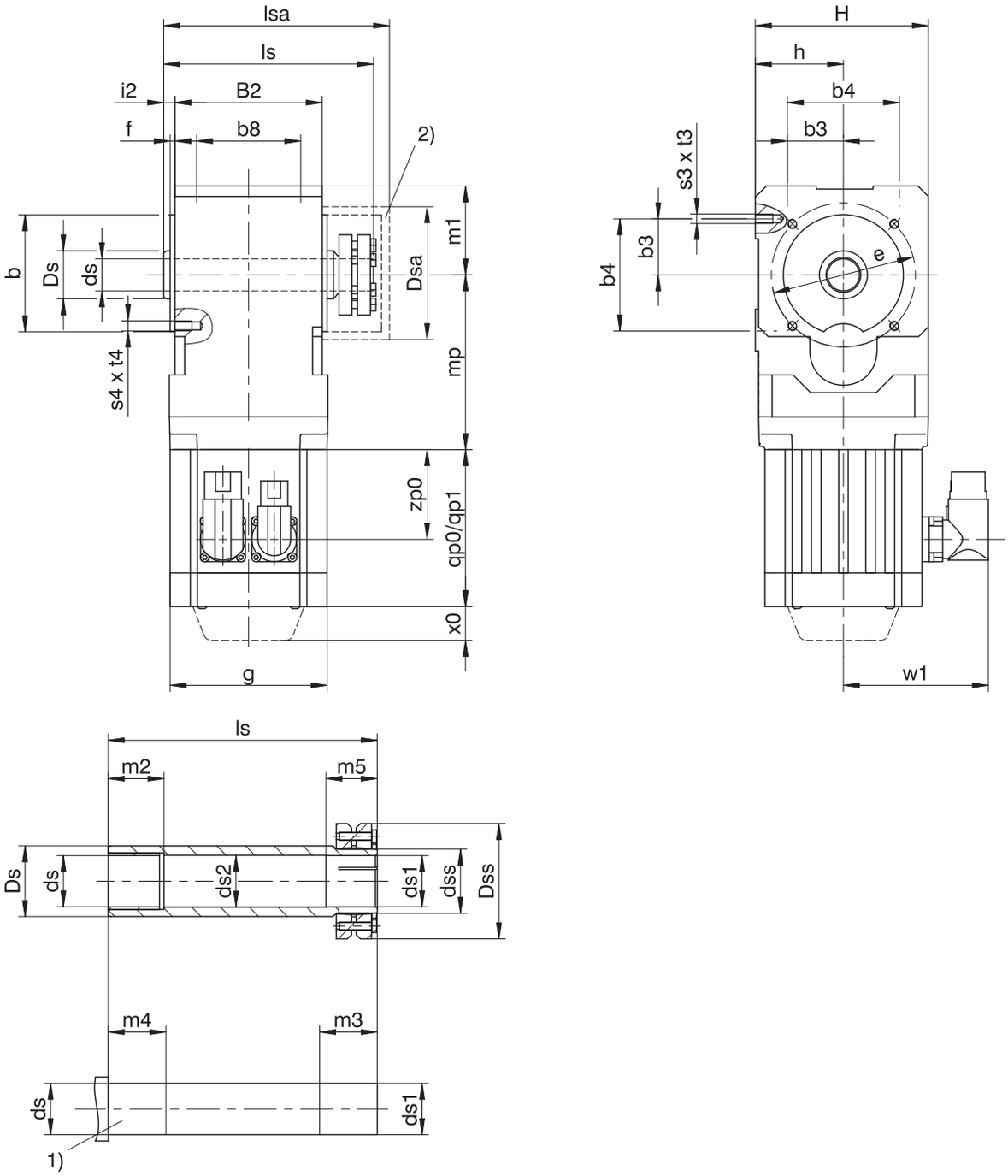

qp0	Applies to motors without brake.	qp1	Applies to motors with brake.
x0	EZ2: Applies only to motors with brake and encoders using an optical or inductive measuring method EZ3 – EZ8: Applies to encoders using an optical measuring method	w1	Different for the One Cable Solution (OCS), see the chapter [▶ 17.4]
1)	Machine shaft: The dimension ls must meet or exceed the specified value.	2)	Cover (optional)

Dimensions of gearboxes

Type	Øb	b3	b4	b8	B2	Ød	Ød1	Ød2	Ødss	ØD	ØDsa	ØDss	Øe	f	h	H	i2	ls	lsa	m1	m2	m3	m4	m5	s3	s4	t3	t4
KL1	60_{j6}	27.5	55	50	75	16^{H7}	$16_{h6}{}^{H7}$	17.5	20	25	64	46.2	75	3	46	90	6	109	114.5	46	17	22	28	23	M6	M6	11	11
KL2	75_{j6}	35.0	70	65	92	20^{H7}	$20_{h6}{}^{H7}$	21.5	24	30	79	50.0	90	3	55	108	7	131	139.0	55	22	27	31	26	M6	M6	13	13

Dimensions of motors

Type	□g	qp0	qp1	w1	x0	zp0
EZ202U	55	141	150.0	47.0	25	86.0
EZ203U	55	159	168.0	47.0	25	104.0
EZ301U	72	90	130.0	55.5	21	54.5
EZ302U	72	112	152.0	55.5	21	76.5
EZ303U	72	134	174.0	55.5	21	98.5
EZ401U	98	98	146.5	91.0	22	56.0
EZ402U	98	123	171.5	91.0	22	81.0
EZ404U	98	173	221.5	91.0	22	131.0

Dimensions of geared motors

Type	EZ2	EZ3	EZ4
	mp	mp	mp
KL102	78.5	95.5	–
KL202	–	112.5	109.0

15.3.12 S shaft design (hollow shaft with shrink disk), NG housing design (base + pitch circle diameter)

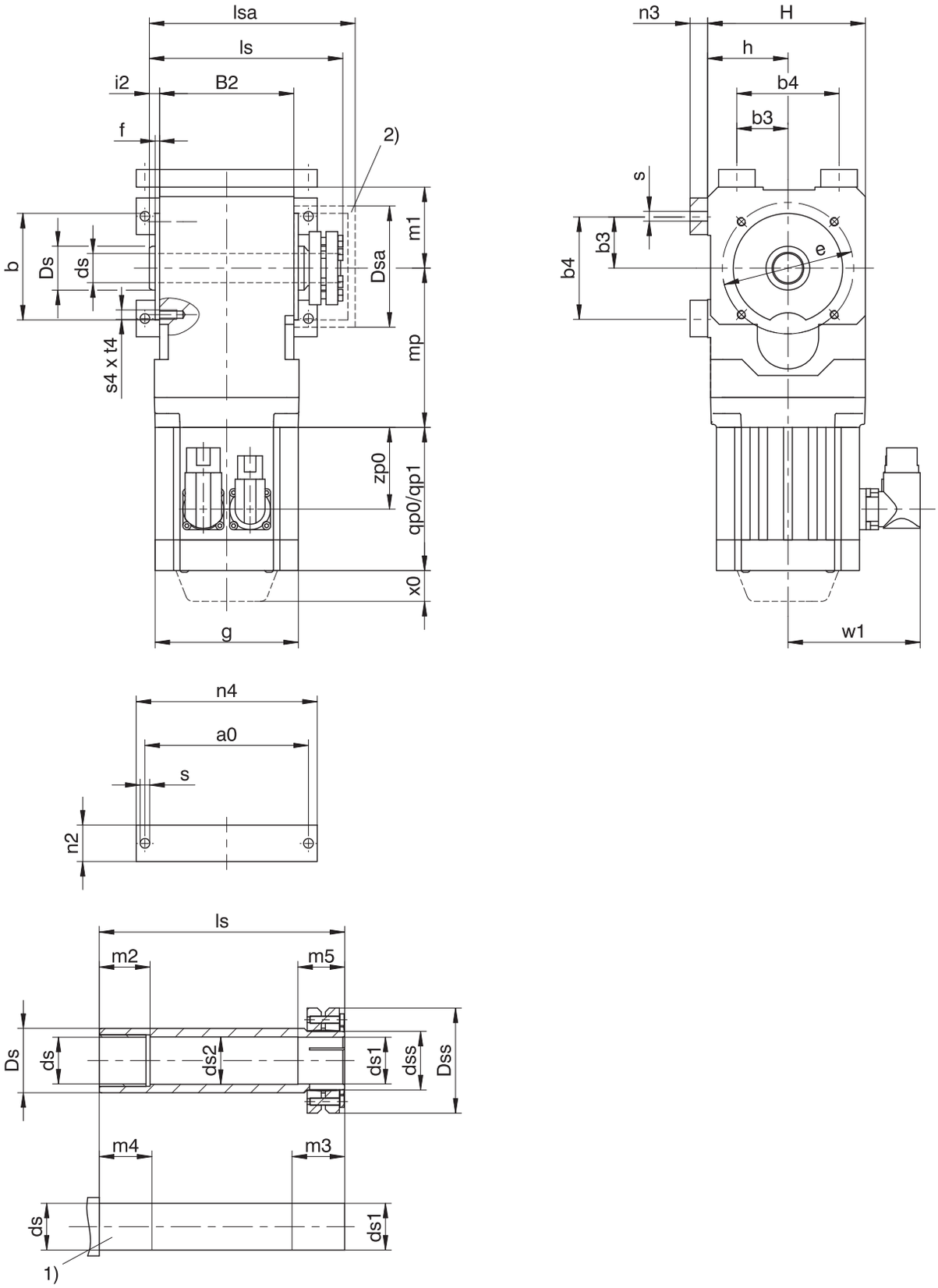

qp0	Applies to motors without brake.	qp1	Applies to motors with brake.
x0	EZ2: Applies only to motors with brake and encoders using an optical or inductive measuring method EZ3 – EZ8: Applies to encoders using an optical measuring method	w1	Different for the One Cable Solution (OCS), see the chapter [▶ 17.4]
1)	Machine shaft: The dimension ls must meet or exceed the specified value.	2)	Cover (optional)

Dimensions of gearboxes

Type	a0	Øb	b3	b4	B2	Ød	Ød1	Ød2	Ødss	ØDs	ØDsa	ØDss	Øe	f	h	H	i2	ls	lsa	m1	m2	m3	m4	m5	n2	n3	n4	Øs	s4	t4
KL1	95	60_{j6}	27.5	55	75	16^{H7}	$16_{h6}{}^{H7}$	17.5	20	25	64	46.2	75	3	46	90	6	109	114.5	46	17	22	28	23	20	12	107	6.6	M6	11
KL2	112	75_{j6}	35.0	70	92	20^{H7}	$20_{h6}{}^{H7}$	21.5	24	30	79	50.0	90	3	55	108	7	131	139.0	55	22	27	31	26	25	12	124	6.6	M6	13

Dimensions of motors

Type	□g	qp0	qp1	w1	x0	zp0
EZ202U	55	141	150.0	47.0	25	86.0
EZ203U	55	159	168.0	47.0	25	104.0
EZ301U	72	90	130.0	55.5	21	54.5
EZ302U	72	112	152.0	55.5	21	76.5
EZ303U	72	134	174.0	55.5	21	98.5
EZ401U	98	98	146.5	91.0	22	56.0
EZ402U	98	123	171.5	91.0	22	81.0
EZ404U	98	173	221.5	91.0	22	131.0

Dimensions of geared motors

Type	EZ2	EZ3	EZ4
	mp	mp	mp
KL102	78.5	95.5	–
KL202	–	112.5	109.0

15.3.13 Shaft design S (hollow shaft with shrink ring), housing design GD (pitch circle diameter + torque arm bracket)

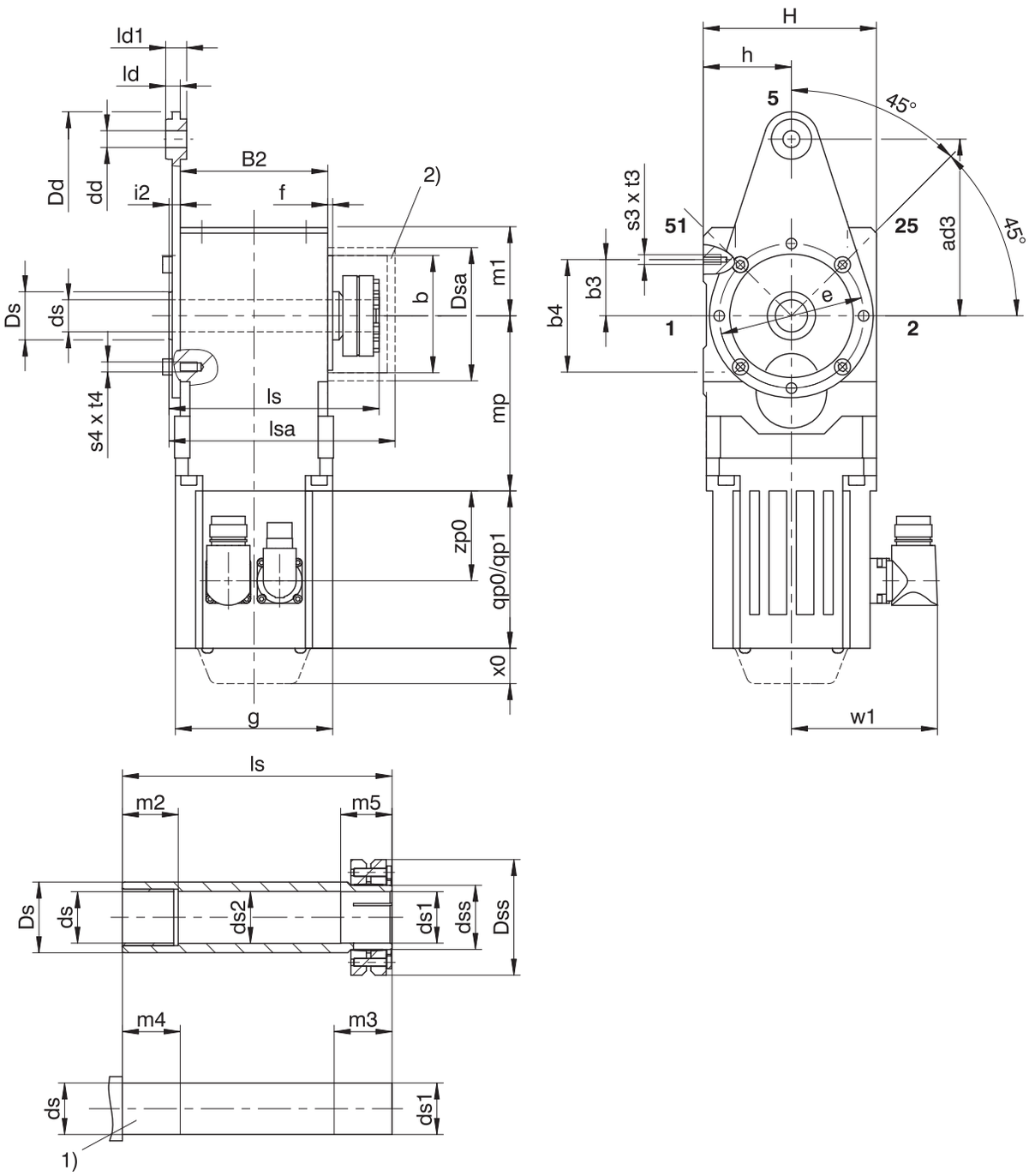

qp0	Applies to motors without brake.	qp1	Applies to motors with brake.
x0	EZ2: Applies only to motors with brake and encoders using an optical or inductive measuring method EZ3 – EZ8: Applies to encoders using an optical measuring method	w1	Different for the One Cable Solution (OCS), see the chapter [▶ 17.4]
1)	Machine shaft: The dimension ls must meet or exceed the specified value.	2)	Cover (optional)

Dimensions of gearboxes

Type	ad3	Øb	b3	b4	B2	Ødd	Øds	Øds1	Øds2	Ødss	ØDs	ØDsa	ØDss	Øe	f	h	H	i2	ld	ld1	ls	lsa	m1	m2	m3	m4	m5	s3	s4	t3	t4
KL2	110	75_{j6}	35	70	92	10.5	20^{H7}	20_{h6}^{H7}	21.5	24	30	79	50	90	3	55	108	7	9	13	131	139.0	55	22	27	31	26	M6	M6	13	13

Dimensions of motors

Type	□g	qp0	qp1	w1	x0	zp0
EZ202U	55	141	150.0	47.0	25	86.0
EZ203U	55	159	168.0	47.0	25	104.0
EZ301U	72	90	130.0	55.5	21	54.5
EZ302U	72	112	152.0	55.5	21	76.5
EZ303U	72	134	174.0	55.5	21	98.5
EZ401U	98	98	146.5	91.0	22	56.0
EZ402U	98	123	171.5	91.0	22	81.0
EZ404U	98	173	221.5	91.0	22	131.0

Dimensions of geared motors

Type	EZ3	EZ4
	mp	mp
KL202	112.5	109.0

15.3.14 S shaft design (hollow shaft with shrink disk), F housing design (flange)

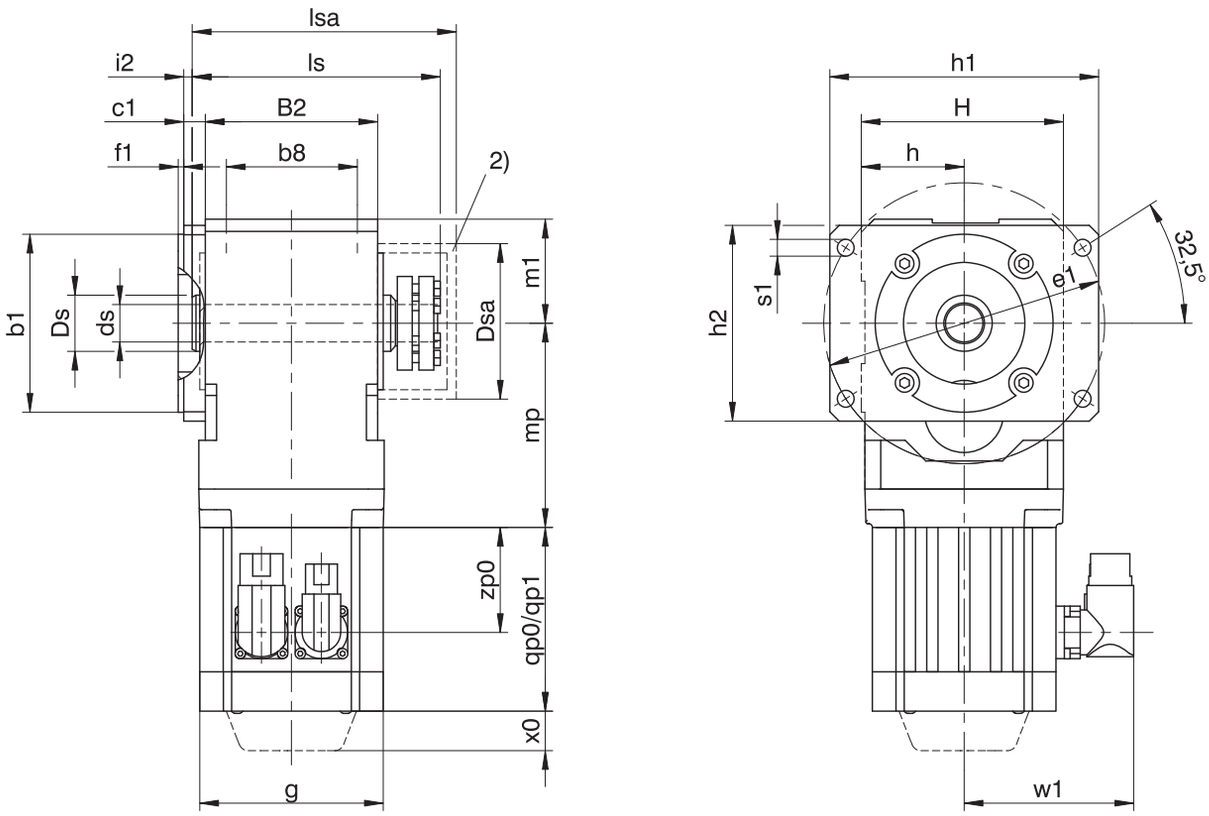

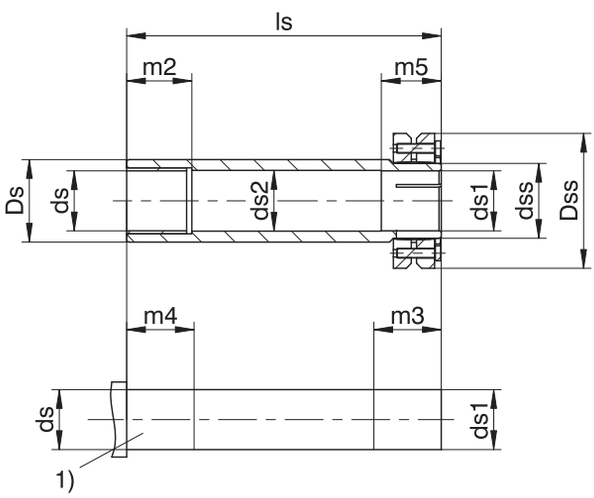

qp0	Applies to motors without brake.	qp1	Applies to motors with brake.
x0	EZ2: Applies only to motors with brake and encoders using an optical or inductive measuring method EZ3 – EZ8: Applies to encoders using an optical measuring method	w1	Different for the One Cable Solution (OCS), see the chapter [▶ 17.4]
1)	Machine shaft: The dimension ls must meet or exceed the specified value.	2)	Cover (optional)

Dimensions of gearboxes

Type	Ød1	b8	B2	c1	Ød	Ød1	Ød2	Ødss	ØDs	ØDsa	ØDss	Øe1	f1	h	h1	h2	H	i2	ls	lsa	m1	m2	m3	m4	m5	Øs1
KL1	60_{j6}	50	75	11.5	16^{H7}	$16_{h6}{}^{H7}$	17.5	20	25	64	46.2	130	3	46	128.5	88.5	90	5.5	109	114.5	46	17	22	28	23	9
KL2	95_{j6}	65	92	11.5	20^{H7}	$20_{h6}{}^{H7}$	21.5	24	30	79	50.0	150	3	55	143.5	104.5	108	4.5	131	139.0	55	22	27	31	26	9

Dimensions of motors

Type	□g	qp0	qp1	w1	x0	zp0
EZ202U	55	141	150.0	47.0	25	86.0
EZ203U	55	159	168.0	47.0	25	104.0
EZ301U	72	90	130.0	55.5	21	54.5
EZ302U	72	112	152.0	55.5	21	76.5
EZ303U	72	134	174.0	55.5	21	98.5
EZ401U	98	98	146.5	91.0	22	56.0
EZ402U	98	123	171.5	91.0	22	81.0
EZ404U	98	173	221.5	91.0	22	131.0

Dimensions of geared motors

Type	EZ2	EZ3	EZ4
	mp	mp	mp
KL102	78.5	95.5	–
KL202	–	112.5	109.0

15.4 Type designation

This chapter shows you an explanation of the type designation with the associated options.

Additional ordering information not included in the type designation can be found at the end of the chapter.

Example code

KL	2	0	2	P	G	0080	EZ401U

Explanation

Code	Designation	Design
KL	Type	Helical bevel gearbox
2	Size	2 (example)
0	Generation	Generation 0
2	Stages	Two-stage
A	Shaft	Hollow shaft with keyway
S		Hollow shaft with shrink ring
G		Solid shaft without feather key
P		Solid shaft with feather key
G	Housing	Pitch circle diameter
F		Flange
NG		Foot + pitch circle diameter
GD		Pitch circle diameter + torque arm bracket
0080	Transmission ratio (i x 10)	i = 8 (example)
EZ401U	Motor	EZ synchronous servo motor

To complete the type designation, also specify the following in your order:

- A detailed type designation of the motor, see the chapter [▶ 17.5]
- Attachment of solid shaft: gearbox side 3 or 4; solid shaft on both sides
- Attachment of hollow shaft with keyway: insertion side 3 or 4
- Attachment of hollow shaft with shrink ring: shrink ring on gearbox side 3 or 4
- Attachment of foot plates: gearbox side 1 or 5
- Attachment of flange: gearbox side 3 or 4
- Pitch circle diameter: gearbox side 3 or 4
- The position of the plug connectors, see the chapter [▶ 15.5.7]

An explanation of the gearbox sides can be found in the chapter [▶ 15.5.5].

To make selecting your geared motor easy, use our STOBER Configurator at https://configurator.stoeber.de/en-US/.

You can find a detailed description of the nameplate in the chapter [▶ 17.5.1].

15.5 Product description

15.5.1 Input options

EZ synchronous servo motor

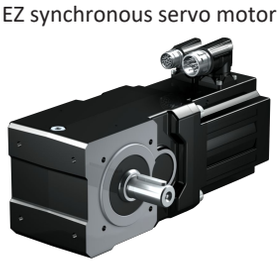

Catalog ID 442437_en

LM Lean motor



Catalog ID 443016_en

The corresponding catalogs can be found at http://www.stoeber.de/en/downloads/

Enter the ID of the catalog in the Search term field.

15.5.2 Housing design

Pitch circle diameter G	Flange F
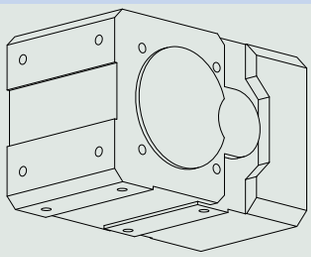	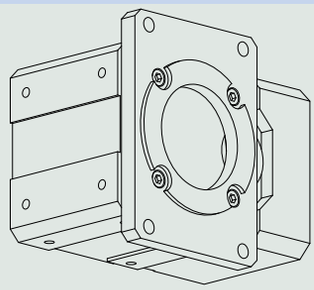
Foot + pitch circle diameter NG	**Pitch circle diameter + torque arm bracket GD**
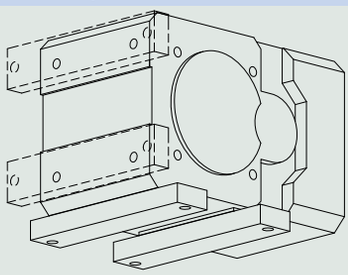	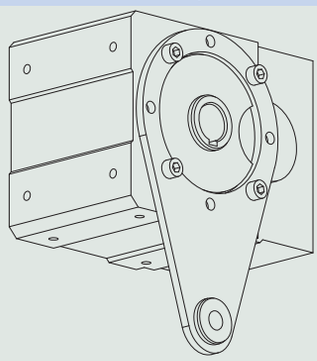

	G	F	NG	GD
KL1	✓	✓	✓	–
KL2	✓	✓	✓	✓

15.5.3 Combinatorial shaft/housing design

	Housing design				
Shaft design	**Code**	**G**	**F**	**NG**	**GD**
Hollow shaft with keyway	**A**	AG	AF	ANG	AGD
Hollow shaft with shrink ring	**S**	SG	SF	SNG	SGD
Solid shaft without feather key	**G**	GG	GF	GNG	–
Solid shaft with feather key	**P**	PG	PF	PNG	–

15.5.4 Installation conditions

Hollow shaft

The hollow shaft hole tolerance is ISO H7. The tolerance of the machine shaft must be ISO k6.

Take care to align the machine shaft with the gearbox hollow shaft when attaching the gearbox.

Maximum deviation ≤ 0.03 mm.

For simpler assembly and disassembly of the machine shaft, the hollow shafts are equipped with a spiral groove (as a grease deposit).

A hardened, threaded keeper plate is included in the scope of delivery. You also have the option to order the hollow shaft without a keeper plate.

Hollow shaft with shrink ring

The tolerance of the hollow shaft hole is ISO H7.

The machine shaft must be ISO h9.

Select a material for the machine shaft with a permitted surface pressure of $p \geq 325\ N/mm^2$.

Possible materials:

- C45E +QT
- 42CrMo4

Fastening the gearboxes on the machine side using the pitch circle diameter

The specified torques and forces only apply when gearboxes are fastened on the machine side using screws of strength class 10.9. In addition, the gear housings must be adjusted at the pilot. The machine-side fit must be H7.

15.5.5 Gearbox sides

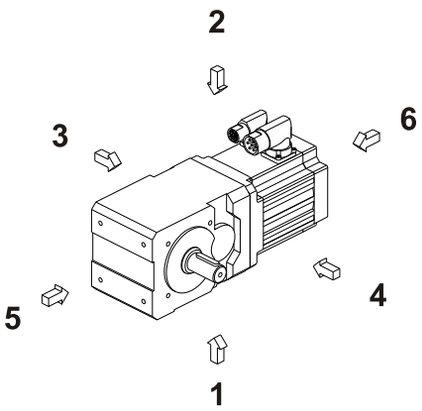

The numbers identify the gearbox sides.

15.5.6 Lubricants

STOBER fills the gearboxes with the amount and type of lubricant specified on the nameplate.

You will receive lubricants for use in the food industry upon request.

15.5.7 Position of the plug connectors

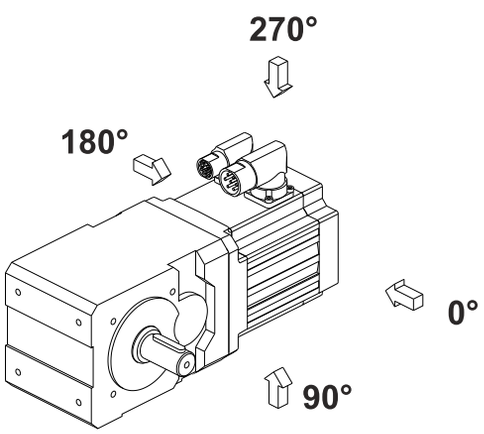

In the standard version, the plug connectors are attached in the 270° position.

Indicate variations for your geared motor in the order.

15.5.8 Other product features

Feature	Value
Max. permitted gearbox temperature (on the surface of the gearbox)	≤ 80 °C
Paint	Black RAL 9005
Explosion-proof design in accordance with (ATEX) Directive 2014/34/EU (optional)	Not available
Efficiency:	
η_{get} two-stage	97%
Protection class:[1]	
Gearbox	IP65
Motor	IP56, optionally IP66

[1] Observe the protection class of all the components.

15.5.9 Direction of rotation

Solid shaft (P and G), solid shaft on both sides (P and G), hollow shaft with keyway (A)

Output side 4	Output side 3
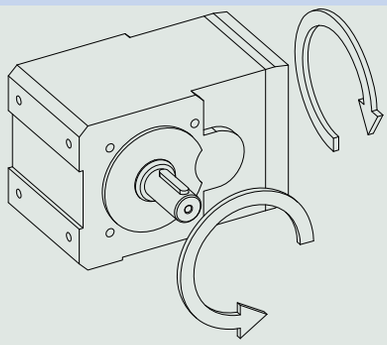	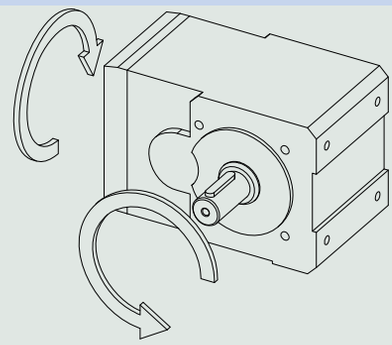

The specified directions of rotation also apply to gearboxes with hollow shaft (A) if the entry side of the machine shaft corresponds to the side of the solid shaft that is shown.

The direction of rotation for the shaft design of a solid shaft on both sides corresponds to the direction of rotation for output side 4.

The pictures show mounting position EL1.

Hollow shaft with shrink ring (S)

Shrink ring side 4	Shrink ring side 3
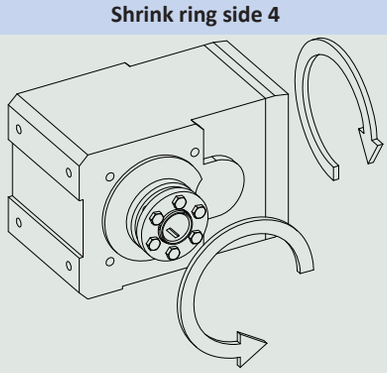	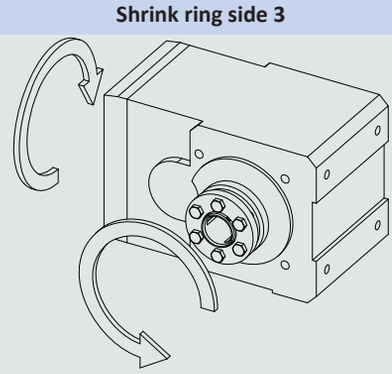

The pictures show mounting position EL1.

15.6 Project configuration

Project your drives using our SERVOsoft designing software. Download SERVOsoft free of charge after registration at https://www.stoeber.de/en/services/info-servosoft/.

It is the most convenient and reliable method of drive selection, as the entire torque/speed curve of the application is displayed and evaluated here in the curve of the geared motor.

In this chapter, only limit values for specific operating points can be taken into consideration for manual drive selection.

An explanation of the formula symbols can be found in Chapter [▷ 20.1].

The formula symbols for values actually present in the application are marked with *.

15.6.1 Drive selection

Drive selection for gearboxes

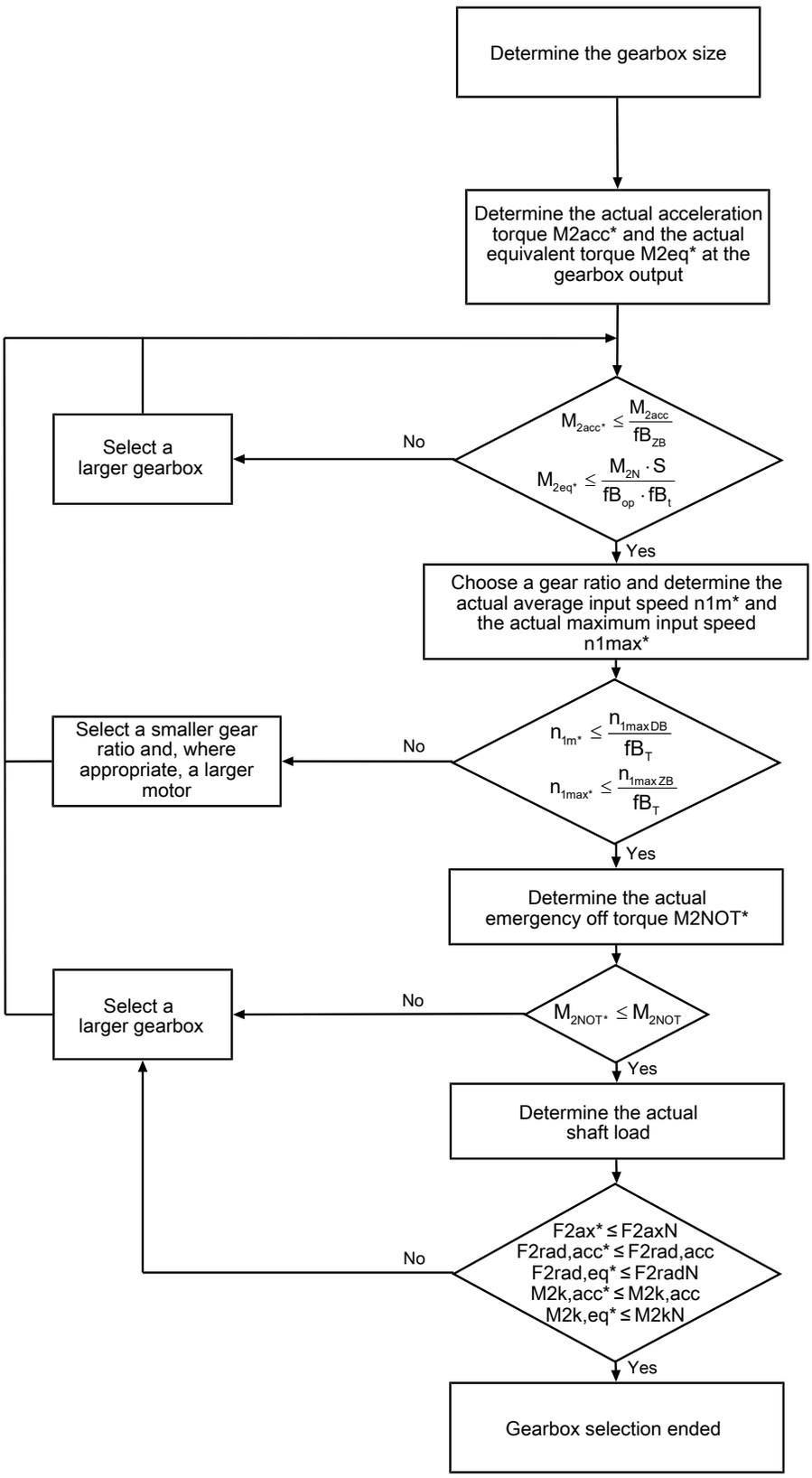

Calculate the forces and tilting torques in the chapter Permitted shaft loads.

Refer to the selection tables for the values for i, n_{1maxDB}, n_{1maxZB}, M_{2acc}, M_{2NOT}, M_{2N} and S.

The values for fB_T, fB_{op}, fB_t and fB_{ZB} can be found in the corresponding tables in this chapter.

Drive selection for motors

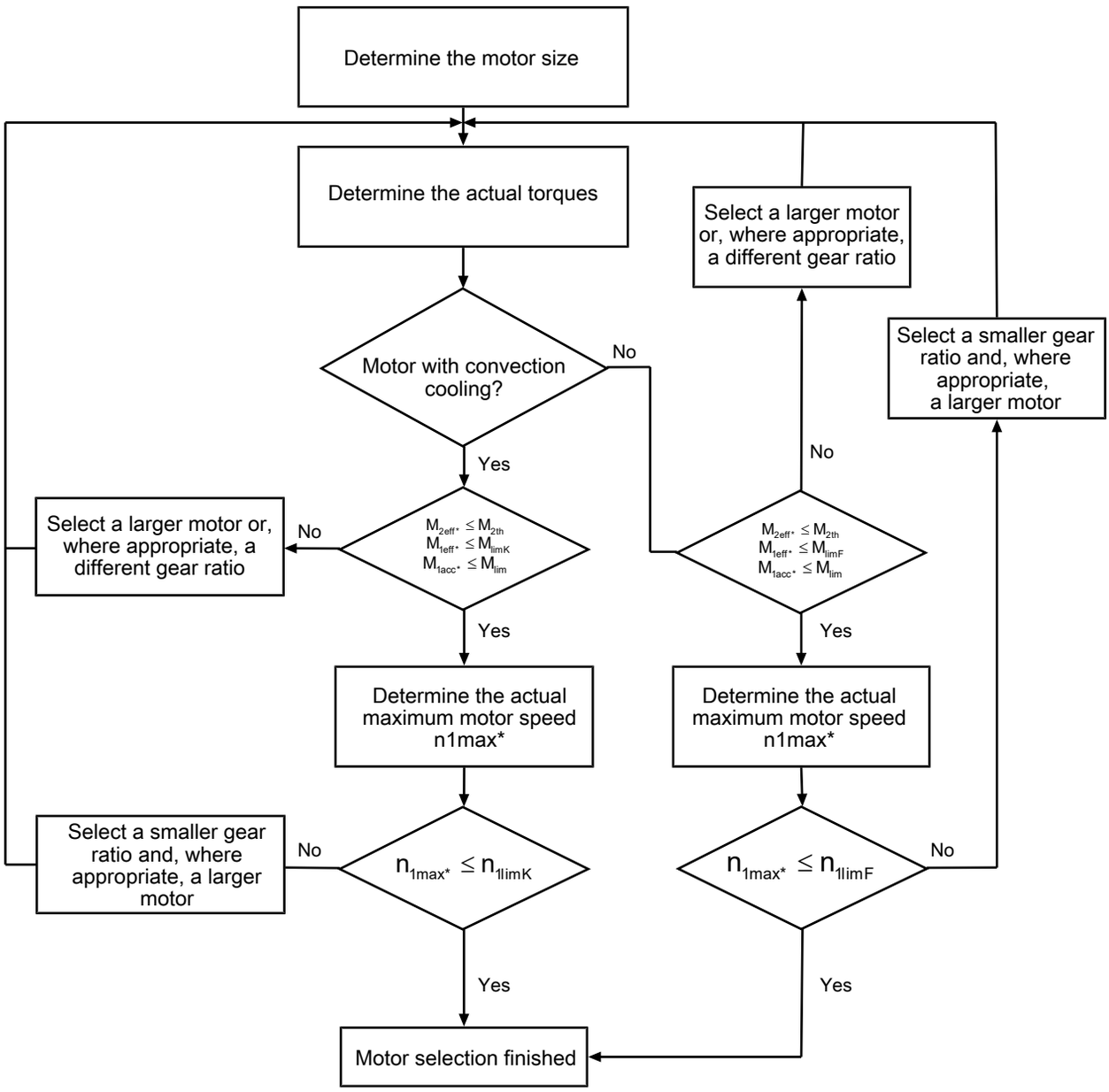

The value for M_{lim}, M_{limK}, M_{limF}, n_{1limK} and n_{1limF} can be found in the motor characteristic curve in the chapter [▶ 17.3]. Note the size, nominal speed n_N and cooling type of the motor.

Example of cyclic operation

The following calculations are based on a representation of the power taken from the output based in accordance with the following example:

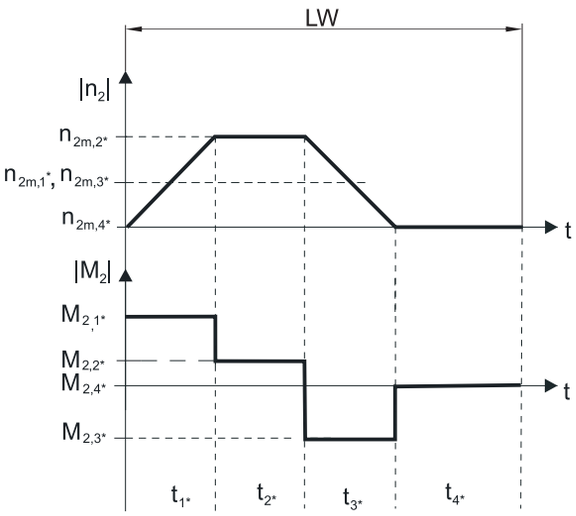

Calculation of the actual maximum acceleration torques

$$M_{2acc*} = J_{tot} \cdot \frac{\Delta n_2}{9{,}55 \cdot \Delta t} + M_{L*}$$

$$M_{1acc*} = \frac{M_{2acc*}}{i \cdot \eta_{get}} + J_1 \cdot \frac{\Delta n_1}{9{,}55 \cdot \Delta t}$$

Calculation of the actual average input speed

$$n_{1m*} = n_{2m*} \cdot i$$

$$n_{2m*} = \frac{\left|n_{2m,1*}\right| \cdot t_{1*} + \ldots + \left|n_{2m,n*}\right| \cdot t_{n*}}{t_{1*} + \ldots + t_{n*}}$$

If $t_{1*} + \ldots + t_{3*} \geq 6$ min, calculate n_{2m*} without the rest phase t_{4*}.

The values for the ratio i can be found in the selection tables.

Calculation of the actual effective torque

$$M_{2eff*} = \sqrt{\frac{t_{1*} \cdot M_{2,1*}{}^2 + \ldots + t_{n*} \cdot M_{2,n*}{}^2}{t_{1*} + \ldots + t_{n*}}}$$

Calculation of the actual emergency off torque

$$M_{2NOT*} = J_{tot} \cdot \frac{\Delta n_2}{9.55 \cdot \Delta t} + M_{L*}$$

Calculation of the actual equivalent torque

$$M_{2eq*} = \sqrt[3]{\frac{\left|n_{2m,1*}\right| \cdot t_{1*} \cdot \left|M_{2,1*}{}^3\right| + \ldots + \left|n_{2m,n*}\right| \cdot t_{n*} \cdot \left|M_{2,n*}{}^3\right|}{\left|n_{2m,1*}\right| \cdot t_{1*} + \ldots + \left|n_{2m,n*}\right| \cdot t_{n*}}}$$

Calculation of the thermal limit torque

Calculate the thermal limit torque M_{2th} for a duty cycle $ED_{10} > 50\%$ and the actual average input speed n_{1m*}. (At $K_{mot,th} \leq 0$ you must reduce the average input speed n_{1m*} accordingly or select another geared motor size.)

$$M_{2th} = M_{op} \cdot i \cdot K_{mot,th}$$

$$K_{mot,th} = 0{,}9 - \frac{a_{th}}{1000} \cdot fB_T \cdot \left(\frac{n_{1m*}}{1000}\right)^2$$

Refer to the selection tables for the values of i and a_{th}.

The values for fB_T can be found in the corresponding table in this chapter.

The value for the torque of the motor at operating point M_{op} with the determined average input speed n_{1m*} can be found in the motor characteristic curve in the chapter [▶ 17.3]. Note the size, nominal speed n_N and cooling type of the motor. The figure below shows an example of reading the torque M_{op} of a motor with convection cooling at the operating point.

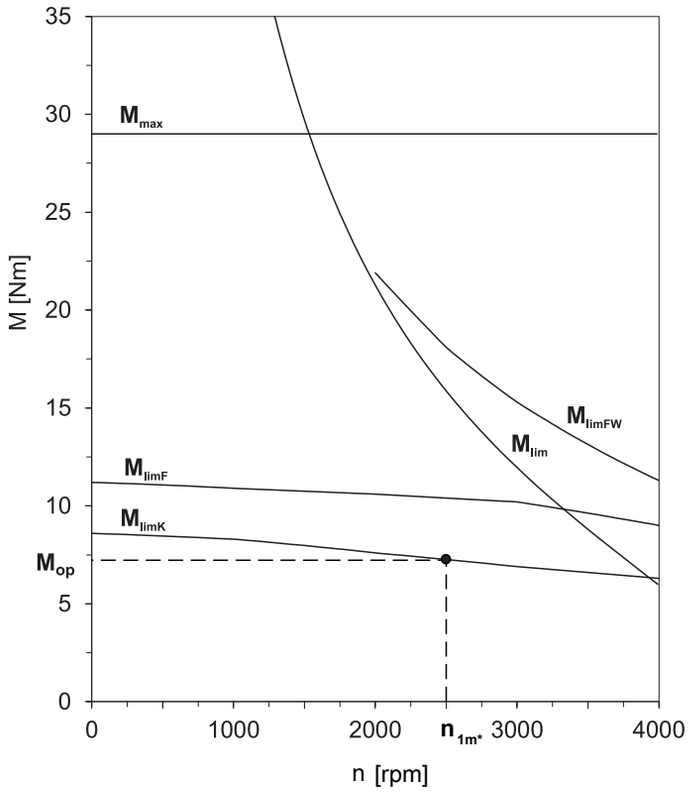

Operating factors

Operating mode	fB_{op}
Uniform continuous operation	1.00
Cyclic operation	1.25
Reversing load cyclic operation	1.40

Run time	fB_t
Daily runtime ≤ 8 h	1.00
Daily runtime ≤ 16 h	1.15
Daily runtime ≤ 24 h	1.20

Cyclic operation	fB_{ZB}
≤ 1000 load changes/hour (LW/h)	1.00
> 1000 load changes/hour (LW/h)	1.15

Temperature		fB_T
Motor cooling	**Surrounding temperature**	
Motor with forced ventilation	≤ 20 °C	0.9
	≤ 30 °C	1.0
	≤ 40 °C	1.15
Motor with convection cooling	≤ 20 °C	1.0
	≤ 30 °C	1.1
	≤ 40 °C	1.25

Notes

- The maximum permitted gearbox temperature (see the "Other product features" chapter) must not be exceeded. Doing so may result in damage to the geared motor.
- For braking from full speed (for example when the power fails or when setting up the machine), note the permitted gearbox torques (M_{2acc}, M_{2NOT}) in the selection tables.

15.6.2 Permitted shaft loads for the output shaft

The values specified in the tables apply to the permitted shaft loads:

- For shaft dimensions in accordance with the catalog
- For output speeds $n_{2m*} \leq 100$ rpm ($F^{2axN} = F_{2ax100}$; $F_{2radN} = F_{2rad100}$; $M_{2kN} = M_{2k100}$)
- Only if radial forces on the gearbox are stabilized by its pilots for the pitch circle diameter and flange housing design

15.6.2.1 G and P shaft designs

Permitted shaft loads for G and P shaft designs (solid shaft)

Type	z_2 [mm]	F_{2ax100} [N]	$F_{2rad100}$ [N]	$F_{2rad,acc}$ [N]	M_{2k100} [Nm]	$M_{2k,acc}$ [Nm]
KL1	20.0	380	1900	1900	68	68
KL2	22.0	560	2800	2800	118	118

For other output speeds, download diagrams at https://configurator.stoeber.de/en-US/.

The following applies to output speeds $n_{2m*} > 100$ rpm:

$$F_{2axN} = \frac{F_{2ax100}}{\sqrt[3]{\frac{n_{2m*}}{100\ \text{rpm}}}} \qquad F_{2radN} = \frac{F_{2rad100}}{\sqrt[3]{\frac{n_{2m*}}{100\ \text{rpm}}}} \qquad M_{2kN} = \frac{M_{2k100}}{\sqrt[3]{\frac{n_{2m*}}{100\ \text{rpm}}}}$$

The values for F_{2ax100}, $F_{2rad100}$ and M_{2k100} can be found in the table "Permitted shaft loads" in this chapter.

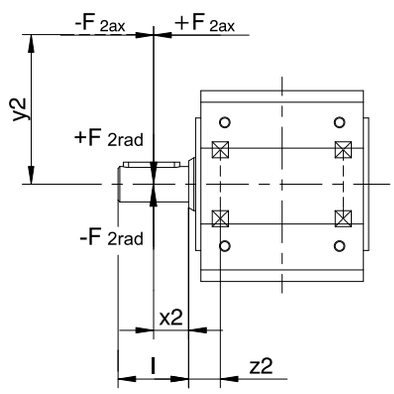

Fig. 1: Force application points for solid shaft

The specified values for $F_{2rad100}$ refer to force application on the center of the output shaft: $x_2 = l/2$.

Shaft dimensions can be found in the "Dimensional drawings" chapter.

The following applies to other force application points:

$$M_{2k,acc*} = \frac{2 \cdot F_{2ax*} \cdot y_2 + F_{2rad,acc*} \cdot (x_2 + z_2)}{1000}$$

For applications with multiple axial and/or radial forces, you must add the forces as vectors.

In the event of EMERGENCY OFF operation (max. 1000 load changes), you can multiply the permitted forces and torques for F_{2ax20}, F_{2rad20} and M_{2k20} by a factor of two.

Also note the calculation for equivalent values:

$$M_{2k,eq*} = \sqrt[3]{\frac{|n_{2m,1*}| \cdot t_{1*} \cdot |M_{2k,acc,1*}^{\ 3}| + \ldots + |n_{2m,n*}| \cdot t_{n*} \cdot |M_{2k,acc,n*}^{\ 3}|}{|n_{2m,1*}| \cdot t_{1*} + \ldots + |n_{2m,n*}| \cdot t_{n*}}}$$

$$F_{2rad,eq*} = \sqrt[3]{\frac{|n_{2m,1*}| \cdot t_{1*} \cdot |F_{2rad,acc,1*}^{\ 3}| + \ldots + |n_{2m,n*}| \cdot t_{n*} \cdot |F_{2rad,acc,n*}^{\ 3}|}{|n_{2m,1*}| \cdot t_{1*} + \ldots + |n_{2m,n*}| \cdot t_{n*}}}$$

15.6.2.2 A and S shaft design

Permitted shaft loads for A shaft design (hollow shaft with keyway)

Type	z_2 [mm]	F_{2ax100} [N]	$F_{2rad100}$ [N]	$F_{2rad,acc}$ [N]	M_{2k100} [Nm]	$M_{2k,acc}$ [Nm]
KL1	18.5	250	1250	1250	43	43
KL2	22.0	560	2800	2800	118	118

Permitted shaft loads for S shaft design (hollow shaft with shrink ring)

Type	z_2 [mm]	F_{2ax100} [N]	$F_{2rad100}$ [N]	$F_{2rad,acc}$ [N]	M_{2k100} [Nm]	$M_{2k,acc}$ [Nm]
KL1	18.5	250	1250	1250	43	43
KL2	22.0	560	2800	2800	118	118

For other output speeds, download diagrams at https://configurator.stoeber.de/en-US/.

The following applies to output speeds n_{2m*} > 100 rpm:

$$F_{2axN} = \frac{F_{2ax100}}{\sqrt[3]{\frac{n_{2m*}}{100\ rpm}}} \qquad F_{2radN} = \frac{F_{2rad100}}{\sqrt[3]{\frac{n_{2m*}}{100\ rpm}}} \qquad M_{2kN} = \frac{M_{2k100}}{\sqrt[3]{\frac{n_{2m*}}{100\ rpm}}}$$

The values for F_{2ax100}, $F_{2rad100}$ and M_{2k100} can be found in the table "Permitted shaft loads" in this chapter.

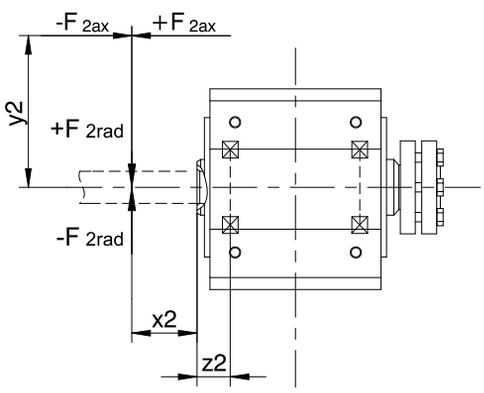

Fig. 2: Force application points for hollow shaft

You can determine the permitted radial forces from the permitted tilting torque M_{2kN} and $M_{2k,acc}$. The actual radial forces may not exceed the permitted radial forces. The permitted radial forces pertain to the shaft end (x2 = 0).

$$M_{2k,acc*} = \frac{2 \cdot F_{2ax*} \cdot y_2 + F_{2rad,acc*} \cdot (x_2 + z_2)}{1000}$$

For applications with multiple axial and/or radial forces, you must add the forces as vectors.

In the event of EMERGENCY OFF operation (max. 1000 load changes), you can multiply the permitted forces and torques for F_{2ax20}, F_{2rad20} and M_{2k20} by a factor of two.

Also note the calculation for equivalent values:

$$M_{2k,eq*} = \sqrt[3]{\frac{|n_{2m,1*}| \cdot t_{1*} \cdot |M_{2k,acc,1*}^{\ 3}| + \ldots + |n_{2m,n*}| \cdot t_{n*} \cdot |M_{2k,acc,n*}^{\ 3}|}{|n_{2m,1*}| \cdot t_{1*} + \ldots + |n_{2m,n*}| \cdot t_{n*}}}$$

$$F_{2rad,eq*} = \sqrt[3]{\frac{|n_{2m,1*}| \cdot t_{1*} \cdot |F_{2rad,acc,1*}^{\ 3}| + \ldots + |n_{2m,n*}| \cdot t_{n*} \cdot |F_{2rad,acc,n*}^{\ 3}|}{|n_{2m,1*}| \cdot t_{1*} + \ldots + |n_{2m,n*}| \cdot t_{n*}}}$$

15.6.3 Radial shaft seal rings

Leak-proofness

Our gearboxes are equipped with high-quality radial shaft seal rings and checked for leaks. However, a leak cannot be fully ruled out over the length of use of a gearbox. If you use a gearbox with goods incompatible with the lubricant, you must take measures to prevent direct contact with the gearbox lubricant in case of a leak.

15.7 Additional documentation

Additional documentation related to the product can be found at
http://www.stoeber.de/en/downloads/

Enter the ID of the documentation in the Search term field.

Documentation	ID
Operating manual gearboxes, geared motors KL	443363_en
Operating manual for EZ synchronous servo motors	443032_en

16 K helical bevel geared motors

Table of contents

16.1 Overview 466

16.2 Selection tables 467

16.3 Dimensional drawings 493

16.3.1 A shaft design (hollow shaft), G housing design (pitch circle diameter) 494

16.3.2 A shaft design (hollow shaft), NG housing design (base + pitch circle diameter) 496

16.3.3 A shaft design (hollow shaft), GD housing design (pitch circle diameter + torque arm bracket) 498

16.3.4 A shaft design (hollow shaft), NGD housing design (foot + pitch circle diameter + torque arm bracket) 502

16.3.5 A shaft design (hollow shaft), F housing design (round flange) 504

16.3.6 A shaft design (hollow shaft), NF housing design (base + round flange) 508

16.3.7 S shaft design (hollow shaft with shrink disk), G housing design (pitch circle diameter) 512

16.3.8 S shaft design (hollow shaft with shrink disk), NG housing design (base + pitch circle diameter) 514

16.3.9 S shaft design (hollow shaft with shrink ring), GD housing design (pitch circle diameter + torque arm bracket) 518

16.3.10 S shaft design (hollow shaft with shrink ring), NGD housing design (foot + pitch circle diameter + torque arm bracket) 522

16.3.11 S shaft design (hollow shaft with shrink disk), F housing design (round flange) 524

16.3.12 S shaft design (hollow shaft with shrink disk), NF housing design (base + round flange) 528

16.3.13 V shaft design (solid shaft), G housing design (pitch circle diameter) 532

16.3.14 V shaft design (solid shaft), NG housing design (base + pitch circle diameter) 534

16.3.15 V shaft design (solid shaft), F housing design (round flange) 536

16.3.16 V shaft design (solid shaft), NF housing design (base + round flange) 538

16.3.17 Oil expansion tank 540

16.4 Type designation 541

16.5 Product description 542

16.5.1 Input options 542

16.5.2 Housing design 543

16.5.3 Combinatorial shaft/housing design 544

16.5.4 Installation conditions 544

16.5.5 Mounting positions 545

16.5.6 Lubricants 546

16.5.7 Position of the plug connectors 547

16.5.8 Other product features 547

16.5.9 Maintenance 547

16.5.10 Direction of rotation 548

16.6 Project configuration 549

16.6.1 Drive selection 550

16.6.2 Permitted shaft loads for the output shaft 554

16.6.3 Radial shaft seal rings 556

16.6.4 Oil expansion tank 556

16.7 Additional documentation 557

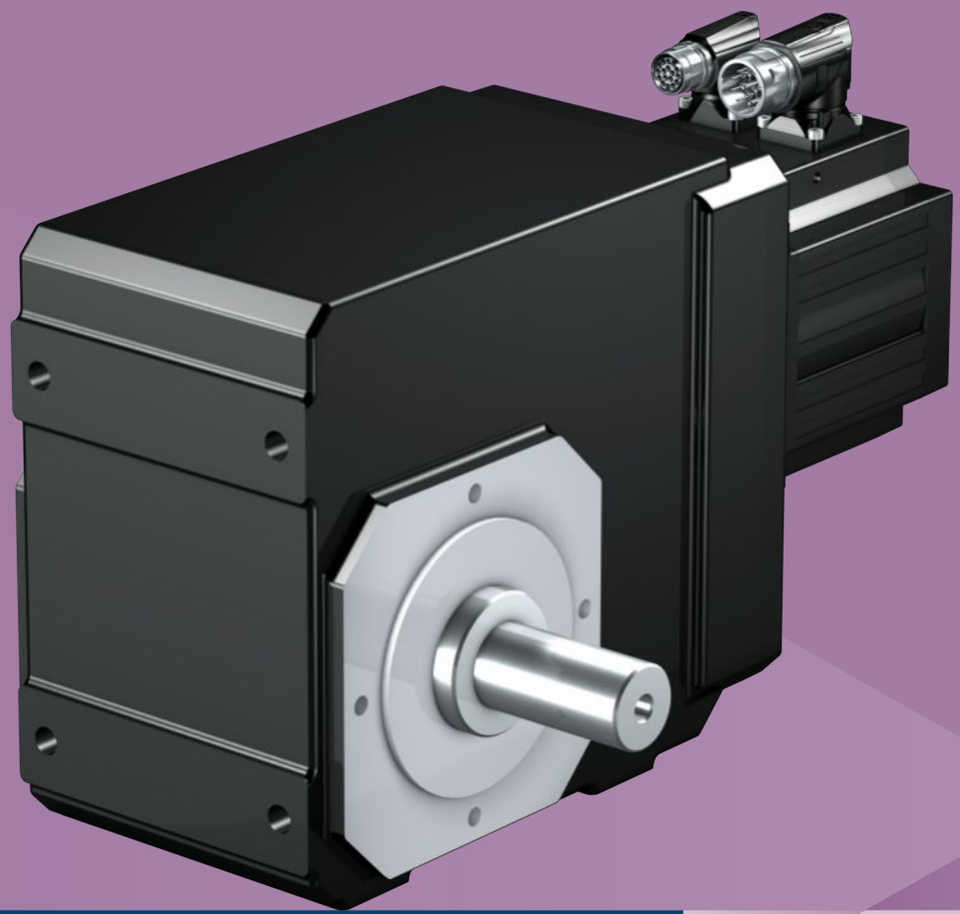

16 Helical bevel geared motors K

16.1 Overview

Highly rigid helical-geared right-angle geared motor

Features

Power density	★★☆☆☆
Backlash	★★★☆☆
Price category	€€
Shaft load	★★★☆☆
Smooth operation	★★★☆☆
Torsional stiffness	★★☆☆☆
Mass moment of inertia	★★★★★
Helical gearing	✓
Maintenance-free (K1 – K4)	✓
FKM seal ring at the input	✓
Reinforced output bearing (K5 – K8)	✓ (on request)
Compact and highly dynamic due to direct motor attachment	✓

Key ★☆☆☆☆ good | ★★★★★ excellent
€ Economy | €€€€€ Premium

Technical data

i	4 – 381
M_{2acc}	23 – 12750 Nm
$\Delta\phi_2$	1.5 – 12 arcmin
η_{get}	94 – 97 %

16.2 Selection tables

The technical data specified in the selection tables applies to:

- Installation altitudes up to 1000 m above sea level
- Surrounding temperatures from 0 °C to 40 °C
- Drives with convection-cooled motors (e.g. EZ401**U**)
- Weight specification for mounting position EL1, housing design G

For the technical data on drives with forced ventilated motors (e.g. EZ401**B**), refer to https://configurator.stoeber.de/en-US/.

An explanation of the formula symbols can be found in Chapter [▷ 20.1].

n_{2N} [rpm]	M_{2N} [Nm]	$M_{2,0}$ [Nm]	a_{th}	S	Type	M_{2acc} [Nm]	M_{2NOT} [Nm]	i	i_{exakt}	n_{1maxDB} EL1,2 [rpm]	n_{1maxDB} EL3,4,5,6 [rpm]	n_{1maxZB} [rpm]	J_1 [kgcm²]	$\Delta\varphi_2$ [arcmin]	$\Delta\varphi_{2redII}$ [arcmin]	$\Delta\varphi_{2redI}$ [arcmin]	C_2 [Nm/ arcmin]	m [kg]
K1 (n_{1N} = 3000 min^{-1}, $M_{2acc,max}$ = 140 Nm)																		
43	63	65	8.4	1.1	K102_0700 EZ301U	83	139	70.03	2451/35	4000	4000	7000	0.20	12.0	6.0	–	6.8	11
53	51	52	6.5	1.7	K102_0560 EZ301U	103	171	56.10	1178/21	4000	4000	7000	0.21	12.0	6.0	–	6.8	11
60	45	46	11	1.1	K102_0500 EZ301U	60	100	50.31	5031/100	4000	4000	7000	0.21	12.0	6.0	–	6.8	11
64	42	43	5.2	2.4	K102_0470 EZ301U	122	203	46.92	2299/49	4000	4000	7000	0.22	12.0	6.0	–	6.8	11
64	72	76	8.9	1.4	K102_0470 EZ302U	122	203	46.92	2299/49	4000	4000	7000	0.32	12.0	6.0	–	6.8	12
64	94	100	12	1.1	K102_0470 EZ303U	122	203	46.92	2299/49	4000	4000	7000	0.43	12.0	6.0	–	6.8	12
74	36	37	8.3	1.7	K102_0400 EZ301U	74	123	40.30	403/10	4000	4000	7000	0.21	12.0	6.0	–	6.8	11
85	32	32	4.6	3.4	K102_0350 EZ301U	95	196	35.11	3686/105	4000	4000	7000	0.23	12.0	6.0	–	6.8	11
85	54	57	7.9	2.0	K102_0350 EZ302U	135	196	35.11	3686/105	4000	4000	7000	0.33	12.0	6.0	–	6.8	12
85	70	75	10	1.5	K102_0350 EZ303U	135	196	35.11	3686/105	4000	4000	7000	0.44	12.0	6.0	–	6.8	12
85	95	102	14	1.1	K102_0350 EZ401U	135	240	35.11	3686/105	4000	4000	7000	0.97	12.0	6.0	–	6.8	14
89	30	31	6.7	2.4	K102_0340 EZ301U	88	146	33.71	4719/140	4000	4000	7000	0.22	12.0	6.0	–	6.8	11
89	52	55	11	1.4	K102_0340 EZ302U	88	146	33.71	4719/140	4000	4000	7000	0.32	12.0	6.0	–	6.8	12
89	68	72	15	1.1	K102_0340 EZ303U	88	146	33.71	4719/140	4000	4000	7000	0.43	12.0	6.0	–	6.8	12
107	25	26	4.7	3.9	K102_0280 EZ301U	76	169	28.05	589/21	4000	4000	7000	0.25	12.0	6.0	–	6.8	11
107	43	46	8.1	2.3	K102_0280 EZ302U	135	169	28.05	589/21	4000	4000	7000	0.35	12.0	6.0	–	6.8	12
107	56	60	11	1.8	K102_0280 EZ303U	135	169	28.05	589/21	4000	4000	7000	0.46	12.0	6.0	–	6.8	12
107	76	82	14	1.3	K102_0280 EZ401U	135	240	28.05	589/21	4000	4000	7000	0.99	12.0	6.0	–	6.8	14
119	23	23	4.8	4.2	K102_0250 EZ301U	68	141	25.22	1261/50	4000	4000	7000	0.24	12.0	6.0	–	6.8	11
119	39	41	8.1	2.5	K102_0250 EZ302U	113	141	25.22	1261/50	4000	4000	7000	0.34	12.0	6.0	–	6.8	12
119	51	54	11	1.9	K102_0250 EZ303U	113	141	25.22	1261/50	4000	4000	7000	0.45	12.0	6.0	–	6.8	12
119	68	73	14	1.4	K102_0250 EZ401U	115	192	25.22	1261/50	4000	4000	7000	0.98	12.0	6.0	–	6.8	14
129	21	21	4.8	4.4	K102_0230 EZ301U	63	159	23.27	1140/49	4000	4000	7000	0.28	12.0	6.0	–	6.8	11
129	36	38	8.2	2.6	K102_0230 EZ302U	113	159	23.27	1140/49	4000	4000	7000	0.38	12.0	6.0	–	6.8	12
129	47	49	11	2.0	K102_0230 EZ303U	127	159	23.27	1140/49	4000	4000	7000	0.49	12.0	6.0	–	6.8	12
129	63	68	14	1.5	K102_0230 EZ401U	135	240	23.27	1140/49	4000	4000	7000	1.0	12.0	6.0	–	6.8	14
149	18	19	4.9	4.9	K102_0200 EZ301U	55	121	20.15	403/20	4000	4000	7000	0.26	12.0	6.0	–	6.8	11
149	31	33	8.3	2.9	K102_0200 EZ302U	97	121	20.15	403/20	4000	4000	7000	0.36	12.0	6.0	–	6.8	12
149	40	43	11	2.2	K102_0200 EZ303U	97	121	20.15	403/20	4000	4000	7000	0.47	12.0	6.0	–	6.8	12
149	55	59	15	1.6	K102_0200 EZ401U	125	220	20.15	403/20	4000	4000	7000	1.0	12.0	6.0	–	6.8	14
149	84	92	22	1.1	K102_0200 EZ501U	125	220	20.15	403/20	4000	4000	7000	3.0	12.0	6.0	–	6.8	15
171	27	29	8.4	3.1	K102_0175 EZ302U	85	128	17.56	2090/119	4000	3800	6000	0.42	12.0	6.0	–	6.8	12
171	35	37	11	2.4	K102_0175 EZ303U	102	128	17.56	2090/119	4000	3800	6000	0.53	12.0	6.0	–	6.8	12
171	48	51	15	1.8	K102_0175 EZ401U	135	240	17.56	2090/119	4000	3800	6000	1.1	12.0	6.0	–	6.8	14
171	73	80	23	1.2	K102_0175 EZ501U	135	240	17.56	2090/119	4000	3800	6000	3.0	12.0	6.0	–	6.8	15
171	80	89	25	1.1	K102_0175 EZ402U	135	240	17.56	2090/119	4000	3800	6000	1.8	12.0	6.0	–	6.8	15
179	26	27	8.4	3.2	K102_0165 EZ302U	81	114	16.71	117/7	4000	4000	7000	0.39	12.0	6.0	–	6.8	12
179	34	36	11	2.5	K102_0165 EZ303U	91	114	16.71	117/7	4000	4000	7000	0.50	12.0	6.0	–	6.8	12
179	45	49	15	1.8	K102_0165 EZ401U	125	220	16.71	117/7	4000	4000	7000	1.0	12.0	6.0	–	6.8	14
179	70	76	23	1.2	K102_0165 EZ501U	125	220	16.71	117/7	4000	4000	7000	3.0	12.0	6.0	–	6.8	15
179	76	84	25	1.1	K102_0165 EZ402U	125	220	16.71	117/7	4000	4000	7000	1.7	12.0	6.0	–	6.8	15
213	22	23	8.5	3.6	K102_0140 EZ302U	68	103	14.11	494/35	4000	3800	6000	0.47	12.0	6.0	–	6.8	12
213	28	30	11	2.8	K102_0140 EZ303U	82	103	14.11	494/35	4000	3800	6000	0.58	12.0	6.0	–	6.8	12
213	38	41	15	2.1	K102_0140 EZ401U	116	240	14.11	494/35	4000	3800	6000	1.1	12.0	6.0	–	6.8	14
213	59	64	23	1.3	K102_0140 EZ501U	135	240	14.11	494/35	4000	3800	6000	3.1	12.0	6.0	–	6.8	15
213	64	71	25	1.2	K102_0140 EZ402U	135	240	14.11	494/35	4000	3800	6000	1.8	12.0	6.0	–	6.8	15
238	19	21	8.9	3.8	K102_0125 EZ302U	61	92	12.62	429/34	4000	3800	6000	0.44	12.0	6.0	–	6.8	12
238	25	27	12	2.9	K102_0125 EZ303U	73	92	12.62	429/34	4000	3800	6000	0.55	12.0	6.0	–	6.8	12
238	34	37	15	2.2	K102_0125 EZ401U	104	220	12.62	429/34	4000	3800	6000	1.1	12.0	6.0	–	6.8	14
238	53	58	23	1.4	K102_0125 EZ501U	125	220	12.62	429/34	4000	3800	6000	3.1	12.0	6.0	–	6.8	15
238	58	64	25	1.3	K102_0125 EZ402U	125	220	12.62	429/34	4000	3800	6000	1.8	12.0	6.0	–	6.8	15

n_{2N} [rpm]	M_{2N} [Nm]	$M_{2,0}$ [Nm]	a_{th}	S	Type	M_{2acc} [Nm]	M_{2NOT} [Nm]	i	i_{exakt}	n_{1maxDB} EL1,2 [rpm]	n_{1maxDB} EL3,4,5,6 [rpm]	n_{1maxZB} [rpm]	J_1 [kgcm²]	$\Delta\varphi_2$ [arcmin]	$\Delta\varphi_{2redII}$ [arcmin]	$\Delta\varphi_{2redI}$ [arcmin]	C_2 [Nm/ arcmin]	m [kg]
K1 (n_{1N} = 3000 min^{-1}, $M_{2acc,max}$ = 140 Nm)																		
259	18	19	9.5	3.8	K102_0115 EZ302U	56	84	11.57	266/23	3600	3300	5500	0.53	12.0	6.0	–	6.8	12
259	23	25	12	2.9	K102_0115 EZ303U	67	84	11.57	266/23	3600	3300	5500	0.64	12.0	6.0	–	6.8	12
259	31	34	15	2.3	K102_0115 EZ401U	95	240	11.57	266/23	3600	3300	5500	1.2	12.0	6.0	–	6.8	14
259	48	53	23	1.5	K102_0115 EZ501U	135	240	11.57	266/23	3600	3300	5500	3.1	12.0	6.0	–	6.8	15
259	53	58	26	1.4	K102_0115 EZ402U	135	240	11.57	266/23	3600	3300	5500	1.9	12.0	6.0	–	6.8	15
296	16	17	10	3.8	K102_0100 EZ302U	49	74	10.14	507/50	4000	3800	6000	0.50	12.0	6.0	–	6.8	12
296	20	22	14	2.9	K102_0100 EZ303U	59	74	10.14	507/50	4000	3800	6000	0.61	12.0	6.0	–	6.8	12
296	28	30	15	2.6	K102_0100 EZ401U	84	220	10.14	507/50	4000	3800	6000	1.1	12.0	6.0	–	6.8	14
296	42	46	24	1.7	K102_0100 EZ501U	125	220	10.14	507/50	4000	3800	6000	3.1	12.0	6.0	–	6.8	15
296	46	51	26	1.5	K102_0100 EZ402U	125	220	10.14	507/50	4000	3800	6000	1.8	12.0	6.0	–	6.8	15
296	68	85	38	1.0	K102_0100 EZ404U	125	220	10.14	507/50	4000	3800	6000	3.2	12.0	6.0	–	6.8	17
324	14	15	11	3.8	K102_0092 EZ302U	45	67	9.249	1748/189	3600	3300	5500	0.62	12.0	6.0	–	6.8	12
324	19	20	15	2.9	K102_0092 EZ303U	54	67	9.249	1748/189	3600	3300	5500	0.73	12.0	6.0	–	6.8	12
324	25	27	16	2.7	K102_0092 EZ401U	76	240	9.249	1748/189	3600	3300	5500	1.3	12.0	6.0	–	6.8	14
324	39	42	24	1.8	K102_0092 EZ501U	129	240	9.249	1748/189	3600	3300	5500	3.2	12.0	6.0	–	6.8	15
324	42	47	26	1.6	K102_0092 EZ402U	129	240	9.249	1748/189	3600	3300	5500	2.0	12.0	6.0	–	6.8	15
324	62	77	38	1.1	K102_0092 EZ404U	129	240	9.249	1748/189	3600	3300	5500	3.3	12.0	6.0	–	6.8	17
324	66	72	41	1.0	K102_0092 EZ502U	129	240	9.249	1748/189	3600	3300	5500	5.5	12.0	6.0	–	6.8	16
324	66	74	41	1.0	K102_0092 EZ701U	129	240	9.249	1748/189	3600	3300	5500	8.8	12.0	6.0	–	6.8	18
361	13	14	12	3.8	K102_0083 EZ302U	40	60	8.309	1911/230	3600	3300	5500	0.58	12.0	6.0	–	6.8	12
361	17	18	16	2.9	K102_0083 EZ303U	48	60	8.309	1911/230	3600	3300	5500	0.69	12.0	6.0	–	6.8	12
361	23	24	16	2.9	K102_0083 EZ401U	69	220	8.309	1911/230	3600	3300	5500	1.2	12.0	6.0	–	6.8	14
361	35	38	24	1.9	K102_0083 EZ501U	125	220	8.309	1911/230	3600	3300	5500	3.2	12.0	6.0	–	6.8	15
361	38	42	26	1.7	K102_0083 EZ402U	125	220	8.309	1911/230	3600	3300	5500	1.9	12.0	6.0	–	6.8	15
361	56	69	39	1.2	K102_0083 EZ404U	125	220	8.309	1911/230	3600	3300	5500	3.3	12.0	6.0	–	6.8	17
361	60	64	42	1.1	K102_0083 EZ502U	125	220	8.309	1911/230	3600	3300	5500	5.5	12.0	6.0	–	6.8	16
361	60	67	42	1.1	K102_0083 EZ701U	125	220	8.309	1911/230	3600	3300	5500	8.8	12.0	6.0	–	6.8	18
452	10	11	14	3.8	K102_0066 EZ302U	32	48	6.644	299/45	3600	3300	5500	0.69	12.0	6.0	–	6.8	12
452	13	14	19	2.9	K102_0066 EZ303U	39	48	6.644	299/45	3600	3300	5500	0.80	12.0	6.0	–	6.8	12
452	18	19	16	3.4	K102_0066 EZ401U	55	193	6.644	299/45	3600	3300	5500	1.3	12.0	6.0	–	6.8	14
452	28	30	25	2.2	K102_0066 EZ501U	103	193	6.644	299/45	3600	3300	5500	3.3	12.0	6.0	–	6.8	15
452	30	34	27	2.0	K102_0066 EZ402U	103	193	6.644	299/45	3600	3300	5500	2.0	12.0	6.0	–	6.8	15
452	44	55	39	1.4	K102_0066 EZ404U	116	193	6.644	299/45	3600	3300	5500	3.4	12.0	6.0	–	6.8	17
452	48	52	42	1.3	K102_0066 EZ502U	116	193	6.644	299/45	3600	3300	5500	5.6	12.0	6.0	–	6.8	16
452	48	53	42	1.3	K102_0066 EZ701U	116	193	6.644	299/45	3600	3300	5500	8.9	12.0	6.0	–	6.8	18
500	16	17	16	3.6	K102_0060 EZ401U	49	175	6.000	6/1	3300	2800	5000	1.4	12.0	6.0	–	6.8	14
500	25	27	25	2.4	K102_0060 EZ501U	93	175	6.000	6/1	3300	2800	5000	3.4	12.0	6.0	–	6.8	15
500	27	30	27	2.2	K102_0060 EZ402U	93	175	6.000	6/1	3300	2800	5000	2.1	12.0	6.0	–	6.8	15
500	40	50	40	1.5	K102_0060 EZ404U	112	175	6.000	6/1	3300	2800	5000	3.5	12.0	6.0	–	6.8	17
500	43	47	43	1.4	K102_0060 EZ502U	112	175	6.000	6/1	3300	2800	5000	5.7	12.0	6.0	–	6.8	16
500	43	48	43	1.4	K102_0060 EZ701U	112	175	6.000	6/1	3300	2800	5000	9.0	12.0	6.0	–	6.8	18
500	56	65	56	1.0	K102_0060 EZ503U	112	175	6.000	6/1	3300	2800	5000	8.1	12.0	6.0	–	6.8	18
539	8.6	9.1	16	3.8	K102_0056 EZ302U	27	41	5.568	1520/273	3300	2800	5000	0.95	12.0	6.0	–	6.8	12
539	11	12	21	2.9	K102_0056 EZ303U	32	41	5.568	1520/273	3300	2800	5000	1.1	12.0	6.0	–	6.8	12
539	15	16	16	3.8	K102_0056 EZ401U	46	162	5.568	1520/273	3300	2800	5000	1.6	12.0	6.0	–	6.8	14
539	23	25	25	2.5	K102_0056 EZ501U	86	162	5.568	1520/273	3300	2800	5000	3.6	12.0	6.0	–	6.8	15
539	25	28	27	2.3	K102_0056 EZ402U	86	162	5.568	1520/273	3300	2800	5000	2.3	12.0	6.0	–	6.8	15
539	37	46	40	1.5	K102_0056 EZ404U	109	162	5.568	1520/273	3300	2800	5000	3.6	12.0	6.0	–	6.8	17
539	40	43	43	1.4	K102_0056 EZ502U	109	162	5.568	1520/273	3300	2800	5000	5.9	12.0	6.0	–	6.8	16
539	40	45	43	1.4	K102_0056 EZ701U	108	162	5.568	1520/273	3300	2800	5000	9.2	12.0	6.0	–	6.8	18
539	52	60	56	1.1	K102_0056 EZ503U	109	162	5.568	1520/273	3300	2800	5000	8.2	12.0	6.0	–	6.8	18
750	8.0	8.5	27	2.9	K102_0040 EZ303U	23	29	4.000	4/1	3300	2800	5000	1.3	12.0	6.0	–	6.8	12
750	11	12	17	4.8	K102_0040 EZ401U	33	116	4.000	4/1	3300	2800	5000	1.8	12.0	6.0	–	6.8	14
750	17	18	26	3.1	K102_0040 EZ501U	62	116	4.000	4/1	3300	2800	5000	3.8	12.0	6.0	–	6.8	15
750	18	20	28	2.8	K102_0040 EZ402U	62	116	4.000	4/1	3300	2800	5000	2.5	12.0	6.0	–	6.8	15
750	27	33	41	1.9	K102_0040 EZ404U	93	116	4.000	4/1	3300	2800	5000	3.8	12.0	6.0	–	6.8	17
750	29	31	44	1.8	K102_0040 EZ502U	93	116	4.000	4/1	3300	2800	5000	6.1	12.0	6.0	–	6.8	16
750	29	32	44	1.8	K102_0040 EZ701U	78	116	4.000	4/1	3300	2800	5000	9.4	12.0	6.0	–	6.8	18
750	38	43	58	1.4	K102_0040 EZ503U	93	116	4.000	4/1	3300	2800	5000	8.4	12.0	6.0	–	6.8	18
K1 (n_{1N} = 6000 min^{-1}, $M_{2acc,max}$ = 140 Nm)																		
86	60	65	8.1	1.2	K102_0700 EZ301U	83	139	70.03	2451/35	4000	4000	7000	0.20	12.0	6.0	–	6.8	11
107	48	52	6.2	1.8	K102_0560 EZ301U	103	171	56.10	1178/21	4000	4000	7000	0.21	12.0	6.0	–	6.8	11
107	82	91	10	1.0	K102_0560 EZ302U	103	171	56.10	1178/21	4000	4000	7000	0.31	12.0	6.0	–	6.8	12
119	43	46	10	1.2	K102_0500 EZ301U	60	100	50.31	5031/100	4000	4000	7000	0.21	12.0	6.0	–	6.8	11

n_{2N} [rpm]	M_{2N} [Nm]	$M_{2,0}$ [Nm]	a_{th}	S	Type	M_{2acc} [Nm]	M_{2NOT} [Nm]	i	i_{exakt}	n_{1maxDB} EL1,2 [rpm]	n_{1maxDB} EL3,4,5,6 [rpm]	n_{1maxZB} [rpm]	J_1 [kgcm²]	$\Delta\varphi_2$ [arcmin]	$\Delta\varphi_{2redII}$ [arcmin]	$\Delta\varphi_{2redI}$ [arcmin]	C_2 [Nm/ arcmin]	m [kg]
K1 (n_{1N} = 6000 min^{-1}, $M_{2acc,max}$ = 140 Nm)																		
128	41	43	5.5	2.3	K102_0470 EZ301U	122	203	46.92	2299/49	4000	4000	7000	0.22	12.0	6.0	–	6.8	11
128	68	76	9.2	1.4	K102_0470 EZ302U	122	203	46.92	2299/49	4000	4000	7000	0.32	12.0	6.0	–	6.8	12
128	89	102	12	1.0	K102_0470 EZ303U	122	203	46.92	2299/49	4000	4000	7000	0.43	12.0	6.0	–	6.8	12
149	35	37	8.0	1.8	K102_0400 EZ301U	74	123	40.30	403/10	4000	4000	7000	0.21	12.0	6.0	–	6.8	11
149	59	66	13	1.0	K102_0400 EZ302U	74	123	40.30	403/10	4000	4000	7000	0.31	12.0	6.0	–	6.8	12
171	30	32	5.6	2.8	K102_0350 EZ301U	95	196	35.11	3686/105	4000	4000	7000	0.23	12.0	6.0	–	6.8	11
171	51	57	9.4	1.7	K102_0350 EZ302U	135	196	35.11	3686/105	4000	4000	7000	0.33	12.0	6.0	–	6.8	12
171	67	77	12	1.3	K102_0350 EZ303U	135	196	35.11	3686/105	4000	4000	7000	0.44	12.0	6.0	–	6.8	12
171	78	95	14	1.1	K102_0350 EZ401U	135	240	35.11	3686/105	4000	4000	7000	0.97	12.0	6.0	–	6.8	14
178	29	31	6.4	2.5	K102_0340 EZ301U	88	146	33.71	4719/140	4000	4000	7000	0.22	12.0	6.0	–	6.8	11
178	49	55	11	1.5	K102_0340 EZ302U	88	146	33.71	4719/140	4000	4000	7000	0.32	12.0	6.0	–	6.8	12
178	64	74	14	1.1	K102_0340 EZ303U	88	146	33.71	4719/140	4000	4000	7000	0.43	12.0	6.0	–	6.8	12
214	24	26	5.7	3.2	K102_0280 EZ301U	76	169	28.05	589/21	4000	4000	7000	0.25	12.0	6.0	–	6.8	11
214	41	46	9.6	1.9	K102_0280 EZ302U	135	169	28.05	589/21	4000	4000	7000	0.35	12.0	6.0	–	6.8	12
214	53	61	13	1.5	K102_0280 EZ303U	135	169	28.05	589/21	4000	4000	7000	0.46	12.0	6.0	–	6.8	12
214	63	76	15	1.3	K102_0280 EZ401U	135	240	28.05	589/21	4000	4000	7000	0.99	12.0	6.0	–	6.8	14
238	22	23	5.7	3.5	K102_0250 EZ301U	68	141	25.22	1261/50	4000	4000	7000	0.24	12.0	6.0	–	6.8	11
238	37	41	9.7	2.1	K102_0250 EZ302U	113	141	25.22	1261/50	4000	4000	7000	0.34	12.0	6.0	–	6.8	12
238	48	55	13	1.6	K102_0250 EZ303U	113	141	25.22	1261/50	4000	4000	7000	0.45	12.0	6.0	–	6.8	12
238	56	68	15	1.3	K102_0250 EZ401U	115	192	25.22	1261/50	4000	4000	7000	0.98	12.0	6.0	–	6.8	14
258	20	21	5.8	3.7	K102_0230 EZ301U	63	159	23.27	1140/49	4000	4000	7000	0.28	12.0	6.0	–	6.8	11
258	34	38	9.7	2.2	K102_0230 EZ302U	113	159	23.27	1140/49	4000	4000	7000	0.38	12.0	6.0	–	6.8	12
258	44	51	13	1.7	K102_0230 EZ303U	127	159	23.27	1140/49	4000	4000	7000	0.49	12.0	6.0	–	6.8	12
258	52	63	15	1.4	K102_0230 EZ401U	135	240	23.27	1140/49	4000	4000	7000	1.0	12.0	6.0	–	6.8	14
298	17	19	5.9	4.0	K102_0200 EZ301U	55	121	20.15	403/20	4000	4000	7000	0.26	12.0	6.0	–	6.8	11
298	29	33	9.9	2.4	K102_0200 EZ302U	97	121	20.15	403/20	4000	4000	7000	0.36	12.0	6.0	–	6.8	12
298	38	44	13	1.8	K102_0200 EZ303U	97	121	20.15	403/20	4000	4000	7000	0.47	12.0	6.0	–	6.8	12
298	45	55	15	1.6	K102_0200 EZ401U	125	220	20.15	403/20	4000	4000	7000	1.0	12.0	6.0	–	6.8	14
298	66	86	22	1.1	K102_0200 EZ501U	125	220	20.15	403/20	4000	4000	7000	3.0	12.0	6.0	–	6.8	15
298	68	96	23	1.0	K102_0200 EZ402U	125	220	20.15	403/20	4000	4000	7000	1.7	12.0	6.0	–	6.8	15
342	15	16	5.9	4.4	K102_0175 EZ301U	48	128	17.56	2090/119	4000	3800	6000	0.32	12.0	6.0	–	6.8	11
342	26	29	10	2.6	K102_0175 EZ302U	85	128	17.56	2090/119	4000	3800	6000	0.42	12.0	6.0	–	6.8	12
342	33	38	13	2.0	K102_0175 EZ303U	102	128	17.56	2090/119	4000	3800	6000	0.53	12.0	6.0	–	6.8	12
342	39	48	15	1.7	K102_0175 EZ401U	135	240	17.56	2090/119	4000	3800	6000	1.1	12.0	6.0	–	6.8	14
342	58	75	23	1.2	K102_0175 EZ501U	135	240	17.56	2090/119	4000	3800	6000	3.0	12.0	6.0	–	6.8	15
342	60	83	23	1.1	K102_0175 EZ402U	135	240	17.56	2090/119	4000	3800	6000	1.8	12.0	6.0	–	6.8	15
359	14	15	5.9	4.6	K102_0165 EZ301U	45	114	16.71	117/7	4000	4000	7000	0.29	12.0	6.0	–	6.8	11
359	24	27	10	2.7	K102_0165 EZ302U	81	114	16.71	117/7	4000	4000	7000	0.39	12.0	6.0	–	6.8	12
359	32	36	13	2.1	K102_0165 EZ303U	91	114	16.71	117/7	4000	4000	7000	0.50	12.0	6.0	–	6.8	12
359	37	45	15	1.8	K102_0165 EZ401U	125	220	16.71	117/7	4000	4000	7000	1.0	12.0	6.0	–	6.8	14
359	55	71	23	1.2	K102_0165 EZ501U	125	220	16.71	117/7	4000	4000	7000	3.0	12.0	6.0	–	6.8	15
359	57	79	23	1.2	K102_0165 EZ402U	125	220	16.71	117/7	4000	4000	7000	1.7	12.0	6.0	–	6.8	15
425	21	23	10	3.0	K102_0140 EZ302U	68	103	14.11	494/35	4000	3800	6000	0.47	12.0	6.0	–	6.8	12
425	27	31	13	2.3	K102_0140 EZ303U	82	103	14.11	494/35	4000	3800	6000	0.58	12.0	6.0	–	6.8	12
425	31	38	16	2.0	K102_0140 EZ401U	116	240	14.11	494/35	4000	3800	6000	1.1	12.0	6.0	–	6.8	14
425	47	60	23	1.3	K102_0140 EZ501U	135	240	14.11	494/35	4000	3800	6000	3.1	12.0	6.0	–	6.8	15
425	48	67	24	1.3	K102_0140 EZ402U	135	240	14.11	494/35	4000	3800	6000	1.8	12.0	6.0	–	6.8	15
476	18	21	10	3.3	K102_0125 EZ302U	61	92	12.62	429/34	4000	3800	6000	0.44	12.0	6.0	–	6.8	12
476	24	28	13	2.5	K102_0125 EZ303U	73	92	12.62	429/34	4000	3800	6000	0.55	12.0	6.0	–	6.8	12
476	28	34	16	2.1	K102_0125 EZ401U	104	220	12.62	429/34	4000	3800	6000	1.1	12.0	6.0	–	6.8	14
476	42	54	23	1.4	K102_0125 EZ501U	125	220	12.62	429/34	4000	3800	6000	3.1	12.0	6.0	–	6.8	15
476	43	60	24	1.4	K102_0125 EZ402U	125	220	12.62	429/34	4000	3800	6000	1.8	12.0	6.0	–	6.8	15
592	15	17	10	3.8	K102_0100 EZ302U	49	74	10.14	507/50	4000	3800	6000	0.50	12.0	6.0	–	6.8	12
592	19	22	14	2.9	K102_0100 EZ303U	59	74	10.14	507/50	4000	3800	6000	0.61	12.0	6.0	–	6.8	12
592	23	28	16	2.5	K102_0100 EZ401U	84	220	10.14	507/50	4000	3800	6000	1.1	12.0	6.0	–	6.8	14
592	33	43	24	1.7	K102_0100 EZ501U	125	220	10.14	507/50	4000	3800	6000	3.1	12.0	6.0	–	6.8	15
592	34	48	24	1.6	K102_0100 EZ402U	125	220	10.14	507/50	4000	3800	6000	1.8	12.0	6.0	–	6.8	15
592	51	77	36	1.1	K102_0100 EZ502U	125	220	10.14	507/50	4000	3800	6000	5.4	12.0	6.0	–	6.8	16
592	51	78	36	1.1	K102_0100 EZ701U	125	220	10.14	507/50	4000	3800	6000	8.7	12.0	6.0	–	6.8	18
K2 (n_{1N} = 3000 min^{-1}, $M_{2acc,max}$ = 220 Nm)																		
17	161	164	4.1	1.2	K203_1810 EZ301U	220	400	181.0	86903/480	4000	3900	6500	0.24	10.0	6.0	2.5	11	22
22	120	123	3.8	1.7	K203_1350 EZ301U	220	400	135.3	30315/224	4000	3900	6500	0.24	10.0	6.0	2.5	11	22
27	97	99	3.6	2.1	K203_1090 EZ301U	220	400	109.5	26273/240	4000	3900	6500	0.25	10.0	6.0	2.5	11	22
27	166	176	6.1	1.2	K203_1090 EZ302U	220	400	109.5	26273/240	4000	3900	6500	0.35	10.0	6.0	2.5	11	22

n_{2N} [rpm]	M_{2N} [Nm]	$M_{2,0}$ [Nm]	a_{th}	S	Type	M_{2acc} [Nm]	M_{2NOT} [Nm]	i	i_{exakt}	n_{1maxDB} EL1,2 [rpm]	n_{1maxDB} EL3,4,5,6 [rpm]	n_{1maxZB} [rpm]	J_1 [kgcm²]	$\Delta\varphi_2$ [arcmin]	$\Delta\varphi_{2redII}$ [arcmin]	$\Delta\varphi_{2redI}$ [arcmin]	C_2 [Nm/ arcmin]	m [kg]
K2 (n_{1N} = 3000 min^{-1}, $M_{2acc,max}$ = 220 Nm)																		
33	81	82	3.4	2.5	K203_0910 EZ301U	220	400	90.79	46483/512	4000	3900	6500	0.25	10.0	6.0	2.5	11	22
33	138	146	5.9	1.4	K203_0910 EZ302U	220	400	90.79	46483/512	4000	3900	6500	0.35	10.0	6.0	2.5	11	22
33	180	190	7.6	1.1	K203_0910 EZ303U	220	400	90.79	46483/512	4000	3900	6500	0.46	10.0	6.0	2.5	11	23
38	121	128	5.7	1.7	K203_0800 EZ302U	220	400	79.62	26273/330	4000	3900	6500	0.35	10.0	6.0	2.5	11	22
38	158	167	7.4	1.3	K203_0800 EZ303U	220	400	79.62	26273/330	4000	3900	6500	0.46	10.0	6.0	2.5	11	23
43	107	113	8.4	1.2	K202_0690 EZ302U	159	253	69.43	6665/96	4000	3900	6500	0.33	10.0	5.0	1.5	11	19
44	104	110	5.5	1.9	K203_0680 EZ302U	220	400	68.42	26273/384	4000	3900	6500	0.36	10.0	6.0	2.5	11	22
44	135	143	7.1	1.5	K203_0680 EZ303U	220	400	68.42	26273/384	4000	3900	6500	0.47	10.0	6.0	2.5	11	23
44	183	196	9.6	1.1	K203_0680 EZ401U	220	400	68.42	26273/384	4000	3900	6500	1.0	10.0	6.0	2.5	11	24
45	100	106	5.4	2.0	K203_0660 EZ302U	220	400	66.03	46483/704	4000	3900	6500	0.35	10.0	6.0	2.5	11	22
45	131	138	7.1	1.5	K203_0660 EZ303U	220	400	66.03	46483/704	4000	3900	6500	0.46	10.0	6.0	2.5	11	23
45	177	189	9.5	1.1	K203_0660 EZ401U	220	400	66.03	46483/704	4000	3900	6500	0.99	10.0	6.0	2.5	11	24
54	86	91	6.6	1.9	K202_0560 EZ302U	191	270	55.54	1333/24	4000	3900	6500	0.34	10.0	5.0	1.5	11	19
54	112	118	8.6	1.4	K202_0560 EZ303U	191	270	55.54	1333/24	4000	3900	6500	0.45	10.0	5.0	1.5	11	20
54	151	162	12	1.1	K202_0560 EZ401U	191	270	55.54	1333/24	4000	3900	6500	0.98	10.0	5.0	1.5	11	21
55	82	87	5.2	2.4	K203_0540 EZ302U	220	348	54.25	135407/2496	4000	3900	6500	0.37	10.0	6.0	2.5	11	22
55	107	114	6.7	1.9	K203_0540 EZ303U	220	348	54.25	135407/2496	4000	3900	6500	0.48	10.0	6.0	2.5	11	23
55	145	156	9.1	1.4	K203_0540 EZ401U	220	348	54.25	135407/2496	4000	3900	6500	1.0	10.0	6.0	2.5	11	24
59	78	82	11	1.2	K202_0500 EZ302U	116	184	50.49	6665/132	4000	3900	6500	0.33	10.0	5.0	1.5	11	19
60	76	80	5.0	2.6	K203_0500 EZ302U	220	319	49.76	26273/528	4000	3900	6500	0.36	10.0	6.0	2.5	11	22
60	98	104	6.6	2.0	K203_0500 EZ303U	220	319	49.76	26273/528	4000	3900	6500	0.47	10.0	6.0	2.5	11	23
60	133	143	8.9	1.5	K203_0500 EZ401U	220	319	49.76	26273/528	4000	3900	6500	1.0	10.0	6.0	2.5	11	24
65	71	75	5.0	2.8	K202_0460 EZ302U	206	258	46.23	1849/40	4000	3900	6500	0.36	10.0	5.0	1.5	11	19
65	93	98	6.5	2.2	K202_0460 EZ303U	206	258	46.23	1849/40	4000	3900	6500	0.47	10.0	5.0	1.5	11	20
65	126	135	8.9	1.6	K202_0460 EZ401U	220	400	46.23	1849/40	4000	3900	6500	1.0	10.0	5.0	1.5	11	21
65	193	211	14	1.0	K202_0460 EZ501U	220	400	46.23	1849/40	4000	3900	6500	3.0	10.0	5.0	1.5	11	22
66	69	73	4.9	2.9	K203_0450 EZ302U	216	290	45.22	58609/1296	4000	3900	6500	0.38	10.0	6.0	2.5	11	22
66	89	95	6.4	2.2	K203_0450 EZ303U	220	290	45.22	58609/1296	4000	3900	6500	0.49	10.0	6.0	2.5	11	23
66	121	130	8.7	1.7	K203_0450 EZ401U	220	290	45.22	58609/1296	4000	3900	6500	1.0	10.0	6.0	2.5	11	24
74	62	66	8.4	1.9	K202_0400 EZ302U	139	196	40.39	1333/33	4000	3900	6500	0.35	10.0	5.0	1.5	11	19
74	81	86	11	1.4	K202_0400 EZ303U	139	196	40.39	1333/33	4000	3900	6500	0.46	10.0	5.0	1.5	11	20
74	110	118	15	1.1	K202_0400 EZ401U	139	196	40.39	1333/33	4000	3900	6500	0.99	10.0	5.0	1.5	11	21
76	60	63	4.8	3.3	K203_0390 EZ302U	189	253	39.45	135407/3432	4000	3900	6500	0.37	10.0	6.0	2.5	11	22
76	78	83	6.3	2.5	K203_0390 EZ303U	202	253	39.45	135407/3432	4000	3900	6500	0.48	10.0	6.0	2.5	11	23
76	106	113	8.5	1.9	K203_0390 EZ401U	202	253	39.45	135407/3432	4000	3900	6500	1.0	10.0	6.0	2.5	11	24
87	53	56	5.5	3.2	K202_0350 EZ302U	168	214	34.55	1935/56	4000	3900	6500	0.41	10.0	5.0	1.5	11	19
87	69	73	7.1	2.5	K202_0350 EZ303U	171	214	34.55	1935/56	4000	3900	6500	0.52	10.0	5.0	1.5	11	20
87	94	101	8.7	2.0	K202_0350 EZ401U	220	400	34.55	1935/56	4000	3900	6500	1.1	10.0	5.0	1.5	11	21
87	144	158	13	1.3	K202_0350 EZ501U	220	400	34.55	1935/56	4000	3900	6500	3.0	10.0	5.0	1.5	11	22
87	158	174	15	1.2	K202_0350 EZ402U	220	400	34.55	1935/56	4000	3900	6500	1.8	10.0	5.0	1.5	11	22
89	52	55	6.2	2.9	K202_0340 EZ302U	150	188	33.62	1849/55	4000	3900	6500	0.37	10.0	5.0	1.5	11	19
89	68	71	8.1	2.2	K202_0340 EZ303U	150	188	33.62	1849/55	4000	3900	6500	0.48	10.0	5.0	1.5	11	20
89	91	98	11	1.7	K202_0340 EZ401U	185	308	33.62	1849/55	4000	3900	6500	1.0	10.0	5.0	1.5	11	21
89	140	153	16	1.1	K202_0340 EZ501U	185	308	33.62	1849/55	4000	3900	6500	3.0	10.0	5.0	1.5	11	22
89	153	170	18	1.0	K202_0340 EZ402U	185	308	33.62	1849/55	4000	3900	6500	1.7	10.0	5.0	1.5	11	22
107	76	81	8.8	2.3	K202_0280 EZ401U	220	400	27.95	559/20	4000	3900	6500	1.1	10.0	5.0	1.5	11	21
107	117	127	14	1.5	K202_0280 EZ501U	220	400	27.95	559/20	4000	3900	6500	3.1	10.0	5.0	1.5	11	22
107	127	141	15	1.4	K202_0280 EZ402U	220	400	27.95	559/20	4000	3900	6500	1.8	10.0	5.0	1.5	11	22
119	39	41	6.9	3.2	K202_0250 EZ302U	122	156	25.13	1935/77	4000	3900	6500	0.42	10.0	5.0	1.5	11	19
119	50	53	9.0	2.5	K202_0250 EZ303U	125	156	25.13	1935/77	4000	3900	6500	0.53	10.0	5.0	1.5	11	20
119	68	73	8.9	2.5	K202_0250 EZ401U	207	400	25.13	1935/77	4000	3900	6500	1.1	10.0	5.0	1.5	11	21
119	105	115	14	1.6	K202_0250 EZ501U	220	400	25.13	1935/77	4000	3900	6500	3.0	10.0	5.0	1.5	11	22
119	115	127	15	1.5	K202_0250 EZ402U	220	400	25.13	1935/77	4000	3900	6500	1.8	10.0	5.0	1.5	11	22
119	168	210	22	1.0	K202_0250 EZ404U	220	400	25.13	1935/77	4000	3900	6500	3.1	10.0	5.0	1.5	11	24
129	36	38	6.3	3.8	K202_0230 EZ302U	112	169	23.18	2967/128	4000	3900	6500	0.52	10.0	5.0	1.5	11	19
129	47	49	8.2	2.9	K202_0230 EZ303U	135	169	23.18	2967/128	4000	3900	6500	0.63	10.0	5.0	1.5	11	20
129	63	67	9.0	2.6	K202_0230 EZ401U	191	400	23.18	2967/128	4000	3900	6500	1.2	10.0	5.0	1.5	11	21
129	97	106	14	1.7	K202_0230 EZ501U	220	400	23.18	2967/128	4000	3900	6500	3.1	10.0	5.0	1.5	11	22
129	106	117	15	1.6	K202_0230 EZ402U	220	400	23.18	2967/128	4000	3900	6500	1.9	10.0	5.0	1.5	11	22
129	155	193	22	1.1	K202_0230 EZ404U	220	400	23.18	2967/128	4000	3900	6500	3.2	10.0	5.0	1.5	11	24
148	55	59	9.1	2.9	K202_0200 EZ401U	168	400	20.33	1118/55	4000	3900	6500	1.1	10.0	5.0	1.5	11	21
148	85	93	14	1.9	K202_0200 EZ501U	220	400	20.33	1118/55	4000	3900	6500	3.1	10.0	5.0	1.5	11	22
148	93	103	15	1.7	K202_0200 EZ402U	220	400	20.33	1118/55	4000	3900	6500	1.8	10.0	5.0	1.5	11	22
148	136	170	22	1.2	K202_0200 EZ404U	220	400	20.33	1118/55	4000	3900	6500	3.2	10.0	5.0	1.5	11	24

n_{2N} [rpm]	M_{2N} [Nm]	$M_{2,0}$ [Nm]	a_{th}	S	Type	M_{2acc} [Nm]	M_{2NOT} [Nm]	i	i_{exakt}	n_{1maxDB} EL1,2 [rpm]	n_{1maxDB} EL3,4,5,6 [rpm]	n_{1maxZB} [rpm]	J_1 [kgcm²]	$\Delta\varphi_2$ [arcmin]	$\Delta\varphi_{2redII}$ [arcmin]	$\Delta\varphi_{2redI}$ [arcmin]	C_2 [Nm/ arcmin]	m [kg]
K2 (n_{1N} = 3000 min^{-1}, $M_{2acc,max}$ = 220 Nm)																		
148	146	158	24	1.1	K202_0200 EZ502U	220	400	20.33	1118/55	4000	3900	6500	5.4	10.0	5.0	1.5	11	24
148	146	164	24	1.1	K202_0200 EZ701U	220	400	20.33	1118/55	4000	3900	6500	8.7	10.0	5.0	1.5	11	26
172	27	28	7.8	3.8	K202_0175 EZ302U	85	127	17.47	559/32	3900	3500	5500	0.65	10.0	5.0	1.5	11	19
172	35	37	10	2.9	K202_0175 EZ303U	102	127	17.47	559/32	3900	3500	5500	0.76	10.0	5.0	1.5	11	20
172	47	51	9.2	3.2	K202_0175 EZ401U	144	400	17.47	559/32	3900	3500	5500	1.3	10.0	5.0	1.5	11	21
172	73	80	14	2.1	K202_0175 EZ501U	220	400	17.47	559/32	3900	3500	5500	3.3	10.0	5.0	1.5	11	22
172	80	88	15	1.9	K202_0175 EZ402U	220	400	17.47	559/32	3900	3500	5500	2.0	10.0	5.0	1.5	11	22
172	117	146	23	1.3	K202_0175 EZ404U	220	400	17.47	559/32	3900	3500	5500	3.3	10.0	5.0	1.5	11	24
172	125	136	24	1.2	K202_0175 EZ502U	220	400	17.47	559/32	3900	3500	5500	5.6	10.0	5.0	1.5	11	24
172	125	141	24	1.2	K202_0175 EZ701U	220	400	17.47	559/32	3900	3500	5500	8.9	10.0	5.0	1.5	11	26
178	26	27	8.0	3.8	K202_0170 EZ302U	82	123	16.86	2967/176	4000	3900	6500	0.55	10.0	5.0	1.5	11	19
178	34	36	10	2.9	K202_0170 EZ303U	98	123	16.86	2967/176	4000	3900	6500	0.66	10.0	5.0	1.5	11	20
178	46	49	9.2	3.3	K202_0170 EZ401U	139	400	16.86	2967/176	4000	3900	6500	1.2	10.0	5.0	1.5	11	21
178	70	77	14	2.1	K202_0170 EZ501U	220	400	16.86	2967/176	4000	3900	6500	3.2	10.0	5.0	1.5	11	22
178	77	85	15	1.9	K202_0170 EZ402U	220	400	16.86	2967/176	4000	3900	6500	1.9	10.0	5.0	1.5	11	22
178	113	141	23	1.3	K202_0170 EZ404U	220	400	16.86	2967/176	4000	3900	6500	3.2	10.0	5.0	1.5	11	24
178	121	131	24	1.2	K202_0170 EZ502U	220	400	16.86	2967/176	4000	3900	6500	5.5	10.0	5.0	1.5	11	24
178	121	136	24	1.2	K202_0170 EZ701U	220	400	16.86	2967/176	4000	3900	6500	8.8	10.0	5.0	1.5	11	26
217	38	40	9.4	3.7	K202_0140 EZ401U	114	400	13.85	2881/208	3900	3500	5500	1.4	10.0	5.0	1.5	11	21
217	58	63	14	2.4	K202_0140 EZ501U	215	400	13.85	2881/208	3900	3500	5500	3.4	10.0	5.0	1.5	11	22
217	63	70	16	2.2	K202_0140 EZ402U	215	400	13.85	2881/208	3900	3500	5500	2.1	10.0	5.0	1.5	11	22
217	93	116	23	1.5	K202_0140 EZ404U	220	400	13.85	2881/208	3900	3500	5500	3.5	10.0	5.0	1.5	11	24
217	99	107	25	1.4	K202_0140 EZ502U	220	400	13.85	2881/208	3900	3500	5500	5.7	10.0	5.0	1.5	11	24
217	99	112	25	1.4	K202_0140 EZ701U	220	400	13.85	2881/208	3900	3500	5500	9.0	10.0	5.0	1.5	11	26
217	130	149	32	1.1	K202_0140 EZ503U	220	400	13.85	2881/208	3900	3500	5500	8.1	10.0	5.0	1.5	11	25
236	20	21	9.8	3.8	K202_0125 EZ302U	62	92	12.71	559/44	3900	3500	5500	0.70	10.0	5.0	1.5	11	19
236	26	27	13	2.9	K202_0125 EZ303U	74	92	12.71	559/44	3900	3500	5500	0.81	10.0	5.0	1.5	11	20
236	35	37	9.4	3.9	K202_0125 EZ401U	105	370	12.71	559/44	3900	3500	5500	1.3	10.0	5.0	1.5	11	21
236	53	58	15	2.6	K202_0125 EZ501U	197	370	12.71	559/44	3900	3500	5500	3.3	10.0	5.0	1.5	11	22
236	58	64	16	2.3	K202_0125 EZ402U	197	370	12.71	559/44	3900	3500	5500	2.0	10.0	5.0	1.5	11	22
236	85	106	23	1.6	K202_0125 EZ404U	220	370	12.71	559/44	3900	3500	5500	3.4	10.0	5.0	1.5	11	24
236	91	99	25	1.5	K202_0125 EZ502U	220	370	12.71	559/44	3900	3500	5500	5.6	10.0	5.0	1.5	11	24
236	91	102	25	1.5	K202_0125 EZ701U	220	400	12.71	559/44	3900	3500	5500	8.9	10.0	5.0	1.5	11	26
236	120	137	33	1.1	K202_0125 EZ503U	220	370	12.71	559/44	3900	3500	5500	8.0	10.0	5.0	1.5	11	25
260	18	19	11	3.8	K202_0115 EZ302U	56	84	11.55	1247/108	3500	3100	5000	0.95	10.0	5.0	1.5	11	19
260	23	25	14	2.9	K202_0115 EZ303U	67	84	11.55	1247/108	3500	3100	5000	1.1	10.0	5.0	1.5	11	20
260	31	34	9.5	4.2	K202_0115 EZ401U	95	336	11.55	1247/108	3500	3100	5000	1.6	10.0	5.0	1.5	11	21
260	48	53	15	2.7	K202_0115 EZ501U	179	336	11.55	1247/108	3500	3100	5000	3.6	10.0	5.0	1.5	11	22
260	53	58	16	2.5	K202_0115 EZ402U	179	336	11.55	1247/108	3500	3100	5000	2.3	10.0	5.0	1.5	11	22
260	77	96	23	1.7	K202_0115 EZ404U	220	336	11.55	1247/108	3500	3100	5000	3.6	10.0	5.0	1.5	11	24
260	83	90	25	1.6	K202_0115 EZ502U	220	336	11.55	1247/108	3500	3100	5000	5.9	10.0	5.0	1.5	11	24
260	83	93	25	1.6	K202_0115 EZ701U	220	400	11.55	1247/108	3500	3100	5000	9.2	10.0	5.0	1.5	11	26
260	109	124	33	1.2	K202_0115 EZ503U	220	336	11.55	1247/108	3500	3100	5000	8.2	10.0	5.0	1.5	11	25
298	27	29	9.6	4.6	K202_0100 EZ401U	83	293	10.07	2881/286	3900	3500	5500	1.5	10.0	5.0	1.5	11	21
298	42	46	15	3.0	K202_0100 EZ501U	156	293	10.07	2881/286	3900	3500	5500	3.5	10.0	5.0	1.5	11	22
298	46	51	16	2.7	K202_0100 EZ402U	156	293	10.07	2881/286	3900	3500	5500	2.2	10.0	5.0	1.5	11	22
298	67	84	24	1.9	K202_0100 EZ404U	220	293	10.07	2881/286	3900	3500	5500	3.6	10.0	5.0	1.5	11	24
298	72	78	25	1.7	K202_0100 EZ502U	220	293	10.07	2881/286	3900	3500	5500	5.8	10.0	5.0	1.5	11	24
298	72	81	25	1.7	K202_0100 EZ701U	195	400	10.07	2881/286	3900	3500	5500	9.1	10.0	5.0	1.5	11	26
298	95	108	33	1.3	K202_0100 EZ503U	220	293	10.07	2881/286	3900	3500	5500	8.2	10.0	5.0	1.5	11	25
298	117	141	41	1.1	K202_0100 EZ702U	220	400	10.07	2881/286	3900	3500	5500	14	10.0	5.0	1.5	11	28
326	25	27	9.7	4.9	K202_0092 EZ401U	76	268	9.190	2279/248	3500	3100	5000	1.8	10.0	5.0	1.5	11	21
326	38	42	15	3.2	K202_0092 EZ501U	143	268	9.190	2279/248	3500	3100	5000	3.8	10.0	5.0	1.5	11	22
326	42	46	16	2.9	K202_0092 EZ402U	143	268	9.190	2279/248	3500	3100	5000	2.5	10.0	5.0	1.5	11	22
326	62	77	24	2.0	K202_0092 EZ404U	214	268	9.190	2279/248	3500	3100	5000	3.9	10.0	5.0	1.5	11	24
326	66	71	26	1.8	K202_0092 EZ502U	214	268	9.190	2279/248	3500	3100	5000	6.1	10.0	5.0	1.5	11	24
326	66	74	26	1.8	K202_0092 EZ701U	178	400	9.190	2279/248	3500	3100	5000	9.4	10.0	5.0	1.5	11	26
326	86	99	34	1.4	K202_0092 EZ503U	214	268	9.190	2279/248	3500	3100	5000	8.5	10.0	5.0	1.5	11	25
326	107	128	42	1.1	K202_0092 EZ702U	220	400	9.190	2279/248	3500	3100	5000	15	10.0	5.0	1.5	11	28
326	120	143	47	1.0	K202_0092 EZ505U	220	400	9.190	2279/248	3500	3100	5000	13	10.0	5.0	1.5	11	28
357	17	18	17	2.9	K202_0084 EZ303U	49	61	8.397	2494/297	3500	3100	5000	1.2	10.0	5.0	1.5	11	20
357	35	38	15	3.4	K202_0084 EZ501U	130	244	8.397	2494/297	3500	3100	5000	3.7	10.0	5.0	1.5	11	22
357	38	42	16	3.1	K202_0084 EZ402U	130	244	8.397	2494/297	3500	3100	5000	2.4	10.0	5.0	1.5	11	22
357	56	70	24	2.1	K202_0084 EZ404U	196	244	8.397	2494/297	3500	3100	5000	3.7	10.0	5.0	1.5	11	24

n_{2N} [rpm]	M_{2N} [Nm]	$M_{2,0}$ [Nm]	a_{th}	S	Type	M_{2acc} [Nm]	M_{2NOT} [Nm]	i	i_{exakt}	n_{1maxDB} EL1,2 [rpm]	n_{1maxDB} EL3,4,5,6 [rpm]	n_{1maxZB} [rpm]	J_1 [kgcm²]	$\Delta\varphi_2$ [arcmin]	$\Delta\varphi_{2redII}$ [arcmin]	$\Delta\varphi_{2redI}$ [arcmin]	C_2 [Nm/ arcmin]	m [kg]
K2 (n_{1N} = 3000 min^{-1}, $M_{2acc,max}$ = 220 Nm)																		
357	60	65	26	2.0	K202_0084 EZ502U	196	244	8.397	2494/297	3500	3100	5000	6.0	10.0	5.0	1.5	11	24
357	60	68	26	2.0	K202_0084 EZ701U	163	400	8.397	2494/297	3500	3100	5000	9.3	10.0	5.0	1.5	11	26
357	79	90	34	1.5	K202_0084 EZ503U	196	244	8.397	2494/297	3500	3100	5000	8.3	10.0	5.0	1.5	11	25
357	98	117	42	1.2	K202_0084 EZ702U	220	400	8.397	2494/297	3500	3100	5000	14	10.0	5.0	1.5	11	28
357	110	130	47	1.1	K202_0084 EZ505U	220	400	8.397	2494/297	3500	3100	5000	13	10.0	5.0	1.5	11	28
421	51	57	26	2.2	K202_0071 EZ701U	138	400	7.118	2107/296	3000	2600	4500	9.8	10.0	5.0	1.5	11	26
421	83	99	42	1.4	K202_0071 EZ702U	211	400	7.118	2107/296	3000	2600	4500	15	10.0	5.0	1.5	11	28
421	93	110	48	1.2	K202_0071 EZ505U	211	400	7.118	2107/296	3000	2600	4500	13	10.0	5.0	1.5	11	28
449	28	30	15	3.9	K202_0067 EZ501U	104	195	6.683	2279/341	3500	3100	5000	4.0	10.0	5.0	1.5	11	22
449	30	34	17	3.6	K202_0067 EZ402U	104	195	6.683	2279/341	3500	3100	5000	2.7	10.0	5.0	1.5	11	22
449	45	56	25	2.4	K202_0067 EZ404U	156	195	6.683	2279/341	3500	3100	5000	4.1	10.0	5.0	1.5	11	24
449	48	52	26	2.3	K202_0067 EZ502U	156	195	6.683	2279/341	3500	3100	5000	6.3	10.0	5.0	1.5	11	24
449	48	54	26	2.3	K202_0067 EZ701U	130	400	6.683	2279/341	3500	3100	5000	9.6	10.0	5.0	1.5	11	26
449	63	72	35	1.7	K202_0067 EZ503U	156	195	6.683	2279/341	3500	3100	5000	8.7	10.0	5.0	1.5	11	25
449	78	93	43	1.4	K202_0067 EZ702U	207	400	6.683	2279/341	3500	3100	5000	15	10.0	5.0	1.5	11	28
449	88	104	48	1.3	K202_0067 EZ505U	207	400	6.683	2279/341	3500	3100	5000	13	10.0	5.0	1.5	11	28
449	107	135	59	1.0	K202_0067 EZ703U	207	400	6.683	2279/341	3500	3100	5000	23	10.0	5.0	1.5	11	30
500	25	27	15	4.2	K202_0060 EZ501U	93	175	6.000	6/1	3000	2600	4500	4.6	10.0	5.0	1.5	11	22
500	27	30	17	3.9	K202_0060 EZ402U	93	175	6.000	6/1	3000	2600	4500	3.3	10.0	5.0	1.5	11	22
500	40	50	25	2.6	K202_0060 EZ404U	140	175	6.000	6/1	3000	2600	4500	4.7	10.0	5.0	1.5	11	24
500	43	47	27	2.5	K202_0060 EZ502U	140	175	6.000	6/1	3000	2600	4500	6.9	10.0	5.0	1.5	11	24
500	43	48	27	2.5	K202_0060 EZ701U	116	400	6.000	6/1	3000	2600	4500	10	10.0	5.0	1.5	11	26
500	56	65	35	1.9	K202_0060 EZ503U	140	175	6.000	6/1	3000	2600	4500	9.3	10.0	5.0	1.5	11	25
500	70	84	43	1.5	K202_0060 EZ702U	200	400	6.000	6/1	3000	2600	4500	15	10.0	5.0	1.5	11	28
500	79	93	48	1.3	K202_0060 EZ505U	200	400	6.000	6/1	3000	2600	4500	14	10.0	5.0	1.5	11	28
500	96	121	59	1.1	K202_0060 EZ703U	200	400	6.000	6/1	3000	2600	4500	23	10.0	5.0	1.5	11	30
579	37	42	27	2.7	K202_0052 EZ701U	100	377	5.177	2107/407	3000	2600	4500	10	10.0	5.0	1.5	11	26
579	60	72	44	1.7	K202_0052 EZ702U	190	377	5.177	2107/407	3000	2600	4500	15	10.0	5.0	1.5	11	28
579	68	80	49	1.5	K202_0052 EZ505U	190	377	5.177	2107/407	3000	2600	4500	14	10.0	5.0	1.5	11	28
579	83	104	60	1.2	K202_0052 EZ703U	190	377	5.177	2107/407	3000	2600	4500	23	10.0	5.0	1.5	11	30
687	20	22	17	4.8	K202_0044 EZ402U	68	127	4.364	48/11	3000	2600	4500	3.7	10.0	5.0	1.5	11	22
687	29	36	25	3.3	K202_0044 EZ404U	102	127	4.364	48/11	3000	2600	4500	5.1	10.0	5.0	1.5	11	24
687	31	34	27	3.0	K202_0044 EZ502U	102	127	4.364	48/11	3000	2600	4500	7.3	10.0	5.0	1.5	11	24
687	31	35	27	3.0	K202_0044 EZ701U	85	317	4.364	48/11	3000	2600	4500	11	10.0	5.0	1.5	11	26
687	41	47	36	2.3	K202_0044 EZ503U	102	127	4.364	48/11	3000	2600	4500	9.7	10.0	5.0	1.5	11	25
687	51	61	44	1.9	K202_0044 EZ702U	174	317	4.364	48/11	3000	2600	4500	16	10.0	5.0	1.5	11	28
687	57	68	50	1.7	K202_0044 EZ505U	180	317	4.364	48/11	3000	2600	4500	14	10.0	5.0	1.5	11	28
687	70	88	61	1.4	K202_0044 EZ703U	180	317	4.364	48/11	3000	2600	4500	24	10.0	5.0	1.5	11	30
750	29	32	27	3.2	K202_0040 EZ701U	78	291	4.000	4/1	3000	2600	4500	11	10.0	5.0	1.5	11	26
750	47	56	45	2.0	K202_0040 EZ702U	159	291	4.000	4/1	3000	2600	4500	16	10.0	5.0	1.5	11	28
750	52	62	50	1.8	K202_0040 EZ505U	174	291	4.000	4/1	3000	2600	4500	15	10.0	5.0	1.5	11	28
750	64	81	61	1.4	K202_0040 EZ703U	174	291	4.000	4/1	3000	2600	4500	24	10.0	5.0	1.5	11	30
K2 (n_{1N} = 4500 min^{-1}, $M_{2acc,max}$ = 220 Nm)																		
354	117	189	37	1.0	K202_0125 EZ505U	220	400	12.71	559/44	3900	3500	5500	13	10.0	5.0	1.5	11	28
390	106	171	37	1.1	K202_0115 EZ505U	220	400	11.55	1247/108	3500	3100	5000	13	10.0	5.0	1.5	11	28
447	93	149	37	1.2	K202_0100 EZ505U	220	400	10.07	2881/286	3900	3500	5500	13	10.0	5.0	1.5	11	28
490	85	136	38	1.3	K202_0092 EZ505U	220	400	9.190	2279/248	3500	3100	5000	13	10.0	5.0	1.5	11	28
536	77	125	38	1.3	K202_0084 EZ505U	220	400	8.397	2494/297	3500	3100	5000	13	10.0	5.0	1.5	11	28
536	99	163	48	1.0	K202_0084 EZ703U	220	400	8.397	2494/297	3500	3100	5000	22	10.0	5.0	1.5	11	30
632	66	106	39	1.5	K202_0071 EZ505U	211	400	7.118	2107/296	3000	2600	4500	13	10.0	5.0	1.5	11	28
632	84	138	49	1.2	K202_0071 EZ703U	211	400	7.118	2107/296	3000	2600	4500	23	10.0	5.0	1.5	11	30
673	62	99	39	1.6	K202_0067 EZ505U	207	400	6.683	2279/341	3500	3100	5000	13	10.0	5.0	1.5	11	28
673	78	130	49	1.2	K202_0067 EZ703U	207	400	6.683	2279/341	3500	3100	5000	23	10.0	5.0	1.5	11	30
750	55	89	39	1.7	K202_0060 EZ505U	200	400	6.000	6/1	3000	2600	4500	14	10.0	5.0	1.5	11	28
750	70	116	50	1.3	K202_0060 EZ703U	200	400	6.000	6/1	3000	2600	4500	23	10.0	5.0	1.5	11	30
869	48	77	40	1.8	K202_0052 EZ505U	190	377	5.177	2107/407	3000	2600	4500	14	10.0	5.0	1.5	11	28
869	61	100	50	1.4	K202_0052 EZ703U	190	377	5.177	2107/407	3000	2600	4500	23	10.0	5.0	1.5	11	30
1031	40	65	40	2.1	K202_0044 EZ505U	180	317	4.364	48/11	3000	2600	4500	14	10.0	5.0	1.5	11	28
1031	51	85	51	1.6	K202_0044 EZ703U	180	317	4.364	48/11	3000	2600	4500	24	10.0	5.0	1.5	11	30
1125	37	59	40	2.2	K202_0040 EZ505U	174	291	4.000	4/1	3000	2600	4500	15	10.0	5.0	1.5	11	28
1125	47	78	51	1.7	K202_0040 EZ703U	174	291	4.000	4/1	3000	2600	4500	24	10.0	5.0	1.5	11	30
K2 (n_{1N} = 6000 min^{-1}, $M_{2acc,max}$ = 220 Nm)																		
44	194	217	6.1	1.0	K203_1350 EZ302U	220	400	135.3	30315/224	4000	3900	6500	0.34	10.0	6.0	2.5	11	22
55	157	176	5.8	1.3	K203_1090 EZ302U	220	400	109.5	26273/240	4000	3900	6500	0.35	10.0	6.0	2.5	11	22

n_{2N} [rpm]	M_{2N} [Nm]	$M_{2,0}$ [Nm]	a_{th}	S	Type	M_{2acc} [Nm]	M_{2NOT} [Nm]	i	i_{exakt}	n_{1maxDB} EL1,2 [rpm]	n_{1maxDB} EL3,4,5,6 [rpm]	n_{1maxZB} [rpm]	J_1 [kgcm²]	$\Delta\varphi_2$ [arcmin]	$\Delta\varphi_{2redII}$ [arcmin]	$\Delta\varphi_{2redI}$ [arcmin]	C_2 [Nm/ arcmin]	m [kg]
K2 (n_{1N} = 6000 min^{-1}, $M_{2acc,max}$ = 220 Nm)																		
66	130	146	5.5	1.5	K203_0910 EZ302U	220	400	90.79	46483/512	4000	3900	6500	0.35	10.0	6.0	2.5	11	22
66	170	195	7.2	1.2	K203_0910 EZ303U	220	400	90.79	46483/512	4000	3900	6500	0.46	10.0	6.0	2.5	11	23
66	200	243	8.5	1.0	K203_0910 EZ401U	220	400	90.79	46483/512	4000	3900	6500	0.99	10.0	6.0	2.5	11	24
75	114	128	5.4	1.7	K203_0800 EZ302U	220	400	79.62	26273/330	4000	3900	6500	0.35	10.0	6.0	2.5	11	22
75	149	171	7.0	1.3	K203_0800 EZ303U	220	400	79.62	26273/330	4000	3900	6500	0.46	10.0	6.0	2.5	11	23
75	175	213	8.3	1.1	K203_0800 EZ401U	220	400	79.62	26273/330	4000	3900	6500	0.99	10.0	6.0	2.5	11	24
86	101	113	7.9	1.3	K202_0690 EZ302U	159	253	69.43	6665/96	4000	3900	6500	0.33	10.0	5.0	1.5	11	19
86	132	152	10	1.0	K202_0690 EZ303U	159	253	69.43	6665/96	4000	3900	6500	0.44	10.0	5.0	1.5	11	20
88	98	110	5.5	1.9	K203_0680 EZ302U	220	400	68.42	26273/384	4000	3900	6500	0.36	10.0	6.0	2.5	11	22
88	128	147	7.1	1.5	K203_0680 EZ303U	220	400	68.42	26273/384	4000	3900	6500	0.47	10.0	6.0	2.5	11	23
88	150	183	8.4	1.3	K203_0680 EZ401U	220	400	68.42	26273/384	4000	3900	6500	1.0	10.0	6.0	2.5	11	24
91	95	106	5.5	2.0	K203_0660 EZ302U	220	400	66.03	46483/704	4000	3900	6500	0.35	10.0	6.0	2.5	11	22
91	124	142	7.2	1.5	K203_0660 EZ303U	220	400	66.03	46483/704	4000	3900	6500	0.46	10.0	6.0	2.5	11	23
91	145	177	8.4	1.3	K203_0660 EZ401U	220	400	66.03	46483/704	4000	3900	6500	0.99	10.0	6.0	2.5	11	24
108	81	91	6.3	2.0	K202_0560 EZ302U	191	270	55.54	1333/24	4000	3900	6500	0.34	10.0	5.0	1.5	11	19
108	106	121	8.2	1.5	K202_0560 EZ303U	191	270	55.54	1333/24	4000	3900	6500	0.45	10.0	5.0	1.5	11	20
108	124	151	9.6	1.3	K202_0560 EZ401U	191	270	55.54	1333/24	4000	3900	6500	0.98	10.0	5.0	1.5	11	21
111	78	87	5.6	2.2	K203_0540 EZ302U	220	348	54.25	135407/2496	4000	3900	6500	0.37	10.0	6.0	2.5	11	22
111	102	117	7.3	1.7	K203_0540 EZ303U	220	348	54.25	135407/2496	4000	3900	6500	0.48	10.0	6.0	2.5	11	23
111	119	145	8.5	1.5	K203_0540 EZ401U	220	348	54.25	135407/2496	4000	3900	6500	1.0	10.0	6.0	2.5	11	24
119	73	82	10	1.3	K202_0500 EZ302U	116	184	50.49	6665/132	4000	3900	6500	0.33	10.0	5.0	1.5	11	19
119	96	110	13	1.0	K202_0500 EZ303U	116	184	50.49	6665/132	4000	3900	6500	0.44	10.0	5.0	1.5	11	20
121	71	80	5.6	2.4	K203_0500 EZ302U	220	319	49.76	26273/528	4000	3900	6500	0.36	10.0	6.0	2.5	11	22
121	93	107	7.3	1.8	K203_0500 EZ303U	220	319	49.76	26273/528	4000	3900	6500	0.47	10.0	6.0	2.5	11	23
121	109	133	8.6	1.6	K203_0500 EZ401U	220	319	49.76	26273/528	4000	3900	6500	1.0	10.0	6.0	2.5	11	24
130	67	75	5.7	2.5	K202_0460 EZ302U	206	258	46.23	1849/40	4000	3900	6500	0.36	10.0	5.0	1.5	11	19
130	88	101	7.5	1.9	K202_0460 EZ303U	206	258	46.23	1849/40	4000	3900	6500	0.47	10.0	5.0	1.5	11	20
130	103	126	8.8	1.6	K202_0460 EZ401U	220	400	46.23	1849/40	4000	3900	6500	1.0	10.0	5.0	1.5	11	21
130	152	197	13	1.1	K202_0460 EZ501U	220	400	46.23	1849/40	4000	3900	6500	3.0	10.0	5.0	1.5	11	22
130	157	220	13	1.1	K202_0460 EZ402U	220	400	46.23	1849/40	4000	3900	6500	1.7	10.0	5.0	1.5	11	22
133	65	73	5.7	2.5	K203_0450 EZ302U	216	290	45.22	58609/1296	4000	3900	6500	0.38	10.0	6.0	2.5	11	22
133	85	97	7.4	1.9	K203_0450 EZ303U	220	290	45.22	58609/1296	4000	3900	6500	0.49	10.0	6.0	2.5	11	23
133	99	121	8.7	1.7	K203_0450 EZ401U	220	290	45.22	58609/1296	4000	3900	6500	1.0	10.0	6.0	2.5	11	24
149	59	66	7.9	2.0	K202_0400 EZ302U	139	196	40.39	1333/33	4000	3900	6500	0.35	10.0	5.0	1.5	11	19
149	77	88	10	1.5	K202_0400 EZ303U	139	196	40.39	1333/33	4000	3900	6500	0.46	10.0	5.0	1.5	11	20
149	90	110	12	1.3	K202_0400 EZ401U	139	196	40.39	1333/33	4000	3900	6500	0.99	10.0	5.0	1.5	11	21
152	57	63	5.7	2.8	K203_0390 EZ302U	189	253	39.45	135407/3432	4000	3900	6500	0.37	10.0	6.0	2.5	11	22
152	74	85	7.5	2.1	K203_0390 EZ303U	202	253	39.45	135407/3432	4000	3900	6500	0.48	10.0	6.0	2.5	11	23
152	87	106	8.8	1.8	K203_0390 EZ401U	202	253	39.45	135407/3432	4000	3900	6500	1.0	10.0	6.0	2.5	11	24
174	50	56	5.9	3.0	K202_0350 EZ302U	168	214	34.55	1935/56	4000	3900	6500	0.41	10.0	5.0	1.5	11	19
174	66	75	7.7	2.3	K202_0350 EZ303U	171	214	34.55	1935/56	4000	3900	6500	0.52	10.0	5.0	1.5	11	20
174	77	94	9.0	2.0	K202_0350 EZ401U	220	400	34.55	1935/56	4000	3900	6500	1.1	10.0	5.0	1.5	11	21
174	114	147	13	1.3	K202_0350 EZ501U	220	400	34.55	1935/56	4000	3900	6500	3.0	10.0	5.0	1.5	11	22
174	117	164	14	1.3	K202_0350 EZ402U	220	400	34.55	1935/56	4000	3900	6500	1.8	10.0	5.0	1.5	11	22
178	49	55	5.9	3.0	K202_0340 EZ302U	150	188	33.62	1849/55	4000	3900	6500	0.37	10.0	5.0	1.5	11	19
178	64	73	7.7	2.3	K202_0340 EZ303U	150	188	33.62	1849/55	4000	3900	6500	0.48	10.0	5.0	1.5	11	20
178	75	91	9.0	2.0	K202_0340 EZ401U	185	308	33.62	1849/55	4000	3900	6500	1.0	10.0	5.0	1.5	11	21
178	111	143	13	1.3	K202_0340 EZ501U	185	308	33.62	1849/55	4000	3900	6500	3.0	10.0	5.0	1.5	11	22
178	114	160	14	1.3	K202_0340 EZ402U	185	308	33.62	1849/55	4000	3900	6500	1.7	10.0	5.0	1.5	11	22
215	62	76	9.2	2.2	K202_0280 EZ401U	220	400	27.95	559/20	4000	3900	6500	1.1	10.0	5.0	1.5	11	21
215	92	119	14	1.5	K202_0280 EZ501U	220	400	27.95	559/20	4000	3900	6500	3.1	10.0	5.0	1.5	11	22
215	95	133	14	1.5	K202_0280 EZ402U	220	400	27.95	559/20	4000	3900	6500	1.8	10.0	5.0	1.5	11	22
239	37	41	6.5	3.4	K202_0250 EZ302U	122	156	25.13	1935/77	4000	3900	6500	0.42	10.0	5.0	1.5	11	19
239	48	55	8.5	2.6	K202_0250 EZ303U	125	156	25.13	1935/77	4000	3900	6500	0.53	10.0	5.0	1.5	11	20
239	56	68	9.2	2.4	K202_0250 EZ401U	207	400	25.13	1935/77	4000	3900	6500	1.1	10.0	5.0	1.5	11	21
239	83	107	14	1.6	K202_0250 EZ501U	220	400	25.13	1935/77	4000	3900	6500	3.0	10.0	5.0	1.5	11	22
239	85	119	14	1.6	K202_0250 EZ402U	220	400	25.13	1935/77	4000	3900	6500	1.8	10.0	5.0	1.5	11	22
239	127	190	21	1.1	K202_0250 EZ502U	220	400	25.13	1935/77	4000	3900	6500	5.3	10.0	5.0	1.5	11	24
239	127	193	21	1.1	K202_0250 EZ701U	220	400	25.13	1935/77	4000	3900	6500	8.6	10.0	5.0	1.5	11	26
259	34	38	6.1	3.9	K202_0230 EZ302U	112	169	23.18	2967/128	4000	3900	6500	0.52	10.0	5.0	1.5	11	19
259	44	51	7.9	3.0	K202_0230 EZ303U	135	169	23.18	2967/128	4000	3900	6500	0.63	10.0	5.0	1.5	11	20
259	52	63	9.3	2.5	K202_0230 EZ401U	191	400	23.18	2967/128	4000	3900	6500	1.2	10.0	5.0	1.5	11	21
259	76	99	14	1.7	K202_0230 EZ501U	220	400	23.18	2967/128	4000	3900	6500	3.1	10.0	5.0	1.5	11	22
259	79	110	14	1.7	K202_0230 EZ402U	220	400	23.18	2967/128	4000	3900	6500	1.9	10.0	5.0	1.5	11	22

n_{2N} [rpm]	M_{2N} [Nm]	$M_{2,0}$ [Nm]	a_{th}	S	Type	M_{2acc} [Nm]	M_{2NOT} [Nm]	i	i_{exakt}	n_{1maxDB} EL1,2 [rpm]	n_{1maxDB} EL3,4,5,6 [rpm]	n_{1maxZB} [rpm]	J_1 [kgcm²]	$\Delta\varphi_2$ [arcmin]	$\Delta\varphi_{2redII}$ [arcmin]	$\Delta\varphi_{2redI}$ [arcmin]	C_2 [Nm/ arcmin]	m [kg]
K2 (n_{1N} = 6000 min^{-1}, $M_{2acc,max}$ = 220 Nm)																		
259	117	175	21	1.1	K202_0230 EZ502U	220	400	23.18	2967/128	4000	3900	6500	5.4	10.0	5.0	1.5	11	24
259	117	178	21	1.1	K202_0230 EZ701U	220	400	23.18	2967/128	4000	3900	6500	8.7	10.0	5.0	1.5	11	26
259	130	189	23	1.0	K202_0230 EZ404U	220	400	23.18	2967/128	4000	3900	6500	3.2	10.0	5.0	1.5	11	24
295	45	55	9.4	2.8	K202_0200 EZ401U	168	400	20.33	1118/55	4000	3900	6500	1.1	10.0	5.0	1.5	11	21
295	67	87	14	1.9	K202_0200 EZ501U	220	400	20.33	1118/55	4000	3900	6500	3.1	10.0	5.0	1.5	11	22
295	69	97	14	1.8	K202_0200 EZ402U	220	400	20.33	1118/55	4000	3900	6500	1.8	10.0	5.0	1.5	11	22
295	103	154	21	1.2	K202_0200 EZ502U	220	400	20.33	1118/55	4000	3900	6500	5.4	10.0	5.0	1.5	11	24
295	103	156	21	1.2	K202_0200 EZ701U	220	400	20.33	1118/55	4000	3900	6500	8.7	10.0	5.0	1.5	11	26
295	114	166	24	1.1	K202_0200 EZ404U	220	400	20.33	1118/55	4000	3900	6500	3.2	10.0	5.0	1.5	11	24
295	122	209	25	1.0	K202_0200 EZ503U	220	400	20.33	1118/55	4000	3900	6500	7.8	10.0	5.0	1.5	11	25
356	25	27	7.5	4.0	K202_0170 EZ302U	82	123	16.86	2967/176	4000	3900	6500	0.55	10.0	5.0	1.5	11	19
356	32	37	9.8	3.1	K202_0170 EZ303U	98	123	16.86	2967/176	4000	3900	6500	0.66	10.0	5.0	1.5	11	20
356	38	46	9.5	3.1	K202_0170 EZ401U	139	400	16.86	2967/176	4000	3900	6500	1.2	10.0	5.0	1.5	11	21
356	56	72	14	2.1	K202_0170 EZ501U	220	400	16.86	2967/176	4000	3900	6500	3.2	10.0	5.0	1.5	11	22
356	57	80	15	2.1	K202_0170 EZ402U	220	400	16.86	2967/176	4000	3900	6500	1.9	10.0	5.0	1.5	11	22
356	85	128	22	1.4	K202_0170 EZ502U	220	400	16.86	2967/176	4000	3900	6500	5.5	10.0	5.0	1.5	11	24
356	85	129	22	1.4	K202_0170 EZ701U	220	400	16.86	2967/176	4000	3900	6500	8.8	10.0	5.0	1.5	11	26
356	95	137	24	1.2	K202_0170 EZ404U	220	400	16.86	2967/176	4000	3900	6500	3.2	10.0	5.0	1.5	11	24
356	101	173	26	1.2	K202_0170 EZ503U	220	400	16.86	2967/176	4000	3900	6500	7.8	10.0	5.0	1.5	11	25
356	118	234	30	1.0	K202_0170 EZ702U	220	400	16.86	2967/176	4000	3900	6500	14	10.0	5.0	1.5	11	28
K3 (n_{1N} = 3000 min^{-1}, $M_{2acc,max}$ = 390 Nm)																		
17	275	291	4.5	1.3	K303_1810 EZ302U	385	688	181.0	86903/480	3800	3500	6000	0.35	10.0	5.0	2.5	16	29
22	207	218	4.1	1.7	K303_1360 EZ302U	385	700	136.0	14147/104	3800	3500	6000	0.35	10.0	5.0	2.5	16	29
22	269	285	5.3	1.3	K303_1360 EZ303U	385	700	136.0	14147/104	3800	3500	6000	0.46	10.0	5.0	2.5	16	30
27	166	175	3.9	2.1	K303_1090 EZ302U	385	700	109.2	167743/1536	3800	3500	6000	0.36	10.0	5.0	2.5	16	29
27	216	229	5.0	1.6	K303_1090 EZ303U	385	700	109.2	167743/1536	3800	3500	6000	0.47	10.0	5.0	2.5	16	30
27	292	313	6.8	1.2	K303_1090 EZ401U	385	700	109.2	167743/1536	3800	3500	6000	1.0	10.0	5.0	2.5	16	31
33	139	147	3.7	2.5	K303_0910 EZ302U	385	585	91.23	26273/288	3800	3500	6000	0.37	10.0	5.0	2.5	16	29
33	181	191	4.8	1.9	K303_0910 EZ303U	385	585	91.23	26273/288	3800	3500	6000	0.48	10.0	5.0	2.5	16	30
33	244	262	6.5	1.4	K303_0910 EZ401U	385	585	91.23	26273/288	3800	3500	6000	1.0	10.0	5.0	2.5	16	31
38	121	128	4.4	2.4	K303_0790 EZ302U	380	509	79.42	167743/2112	3800	3500	6000	0.36	10.0	5.0	2.5	16	29
38	157	166	5.7	1.8	K303_0790 EZ303U	385	509	79.42	167743/2112	3800	3500	6000	0.47	10.0	5.0	2.5	16	30
38	213	228	7.7	1.3	K303_0790 EZ401U	385	509	79.42	167743/2112	3800	3500	6000	1.0	10.0	5.0	2.5	16	31
38	322	352	9.6	1.1	K303_0780 EZ501U	385	700	78.41	103501/1320	3800	3500	6000	3.1	10.0	5.0	2.5	16	32
43	107	113	5.8	2.0	K302_0690 EZ302U	238	298	69.43	6665/96	3800	3500	6000	0.37	10.0	4.0	1.5	16	24
43	139	147	7.5	1.5	K302_0690 EZ303U	238	298	69.43	6665/96	3800	3500	6000	0.48	10.0	4.0	1.5	16	25
43	189	202	10	1.1	K302_0690 EZ401U	238	298	69.43	6665/96	3800	3500	6000	1.0	10.0	4.0	1.5	16	26
44	103	109	3.5	3.3	K303_0680 EZ302U	324	434	67.73	74777/1104	3800	3500	6000	0.38	10.0	5.0	2.5	16	29
44	134	142	4.6	2.6	K303_0680 EZ303U	347	434	67.73	74777/1104	3800	3500	6000	0.49	10.0	5.0	2.5	16	30
44	181	194	6.2	1.9	K303_0680 EZ401U	347	434	67.73	74777/1104	3800	3500	6000	1.0	10.0	5.0	2.5	16	31
45	275	300	9.2	1.3	K303_0670 EZ501U	385	700	66.87	46139/690	3800	3500	6000	3.1	10.0	5.0	2.5	16	32
45	101	107	4.4	2.7	K303_0660 EZ302U	317	425	66.35	26273/396	3800	3500	6000	0.37	10.0	5.0	2.5	16	29
45	131	139	5.8	2.0	K303_0660 EZ303U	340	425	66.35	26273/396	3800	3500	6000	0.48	10.0	5.0	2.5	16	30
45	178	190	7.8	1.5	K303_0660 EZ401U	340	425	66.35	26273/396	3800	3500	6000	1.0	10.0	5.0	2.5	16	31
46	269	294	9.2	1.3	K303_0650 EZ501U	385	700	65.50	32422/495	3800	3500	6000	3.1	10.0	5.0	2.5	16	32
54	151	162	7.7	1.8	K302_0560 EZ401U	318	529	55.71	2451/44	3800	3500	6000	1.0	10.0	4.0	1.5	16	26
54	232	254	12	1.1	K302_0560 EZ501U	318	529	55.71	2451/44	3800	3500	6000	3.0	10.0	4.0	1.5	16	27
54	254	281	13	1.0	K302_0560 EZ402U	318	529	55.71	2451/44	3800	3500	6000	1.7	10.0	4.0	1.5	16	27
55	83	88	4.1	3.4	K303_0550 EZ302U	261	350	54.58	70735/1296	3800	3500	6000	0.40	10.0	5.0	2.5	16	29
55	108	114	5.3	2.6	K303_0550 EZ303U	280	350	54.58	70735/1296	3800	3500	6000	0.51	10.0	5.0	2.5	16	30
55	146	157	7.1	1.9	K303_0550 EZ401U	280	350	54.58	70735/1296	3800	3500	6000	1.0	10.0	5.0	2.5	16	31
56	222	242	8.8	1.6	K303_0540 EZ501U	385	700	53.88	8729/162	3800	3500	6000	3.1	10.0	5.0	2.5	16	32
59	78	82	7.3	2.0	K302_0500 EZ302U	173	217	50.49	6665/132	3800	3500	6000	0.37	10.0	4.0	1.5	16	24
59	101	107	9.6	1.5	K302_0500 EZ303U	173	217	50.49	6665/132	3800	3500	6000	0.48	10.0	4.0	1.5	16	25
59	137	147	13	1.1	K302_0500 EZ401U	173	217	50.49	6665/132	3800	3500	6000	1.0	10.0	4.0	1.5	16	26
61	75	79	4.5	3.3	K303_0490 EZ302U	235	316	49.26	74777/1518	3800	3500	6000	0.39	10.0	5.0	2.5	16	29
61	97	103	5.8	2.6	K303_0490 EZ303U	253	316	49.26	74777/1518	3800	3500	6000	0.50	10.0	5.0	2.5	16	30
61	132	141	7.8	1.9	K303_0490 EZ401U	253	316	49.26	74777/1518	3800	3500	6000	1.0	10.0	5.0	2.5	16	31
62	200	219	8.5	1.8	K303_0490 EZ501U	385	700	48.63	184556/3795	3800	3500	6000	3.1	10.0	5.0	2.5	16	32
62	344	372	15	1.0	K303_0490 EZ502U	385	700	48.63	184556/3795	3800	3500	6000	5.4	10.0	5.0	2.5	16	34
65	126	135	5.7	2.7	K302_0460 EZ401U	381	688	46.23	1849/40	3800	3500	6000	1.1	10.0	4.0	1.5	16	26
65	193	211	8.7	1.8	K302_0460 EZ501U	385	688	46.23	1849/40	3800	3500	6000	3.1	10.0	4.0	1.5	16	27
65	211	233	9.5	1.6	K302_0460 EZ402U	385	688	46.23	1849/40	3800	3500	6000	1.8	10.0	4.0	1.5	16	27
65	309	386	14	1.1	K302_0460 EZ404U	385	688	46.23	1849/40	3800	3500	6000	3.1	10.0	4.0	1.5	16	29

n_{2N} [rpm]	M_{2N} [Nm]	$M_{2,0}$ [Nm]	a_{th}	S	Type	M_{2acc} [Nm]	M_{2NOT} [Nm]	i	i_{exakt}	n_{1maxDB} EL1,2 [rpm]	n_{1maxDB} EL3,4,5,6 [rpm]	n_{1maxZB} [rpm]	J_1 [kgcm²]	$\Delta\varphi_2$ [arcmin]	$\Delta\varphi_{2redII}$ [arcmin]	$\Delta\varphi_{2redI}$ [arcmin]	C_2 [Nm/ arcmin]	m [kg]
K3 (n_{1N} = 3000 min^{-1}, $M_{2acc,max}$ = 390 Nm)																		
65	332	359	15	1.0	K302_0460 EZ502U	385	688	46.23	1849/40	3800	3500	6000	5.4	10.0	4.0	1.5	16	29
65	332	372	15	1.0	K302_0460 EZ701U	385	688	46.23	1849/40	3800	3500	6000	8.7	10.0	4.0	1.5	16	31
67	185	202	8.4	1.9	K303_0450 EZ501U	385	700	44.89	11223/250	3800	3500	6000	3.1	10.0	5.0	2.5	16	32
67	318	343	14	1.1	K303_0450 EZ502U	385	700	44.89	11223/250	3800	3500	6000	5.4	10.0	5.0	2.5	16	34
74	110	118	9.8	1.8	K302_0410 EZ401U	231	385	40.51	4902/121	3800	3500	6000	1.1	10.0	4.0	1.5	16	26
74	169	185	15	1.1	K302_0410 EZ501U	231	385	40.51	4902/121	3800	3500	6000	3.0	10.0	4.0	1.5	16	27
74	185	204	16	1.0	K302_0410 EZ402U	231	385	40.51	4902/121	3800	3500	6000	1.8	10.0	4.0	1.5	16	27
77	161	176	8.2	2.1	K303_0390 EZ501U	385	698	39.19	34916/891	3800	3500	6000	3.1	10.0	5.0	2.5	16	32
77	277	300	14	1.2	K303_0390 EZ502U	385	698	39.19	34916/891	3800	3500	6000	5.4	10.0	5.0	2.5	16	34
84	147	161	8.2	2.3	K303_0360 EZ501U	385	639	35.83	215/6	3800	3500	6000	3.2	10.0	5.0	2.5	16	32
84	253	274	14	1.3	K303_0360 EZ502U	385	639	35.83	215/6	3800	3500	6000	5.5	10.0	5.0	2.5	16	34
84	332	380	19	1.0	K303_0360 EZ503U	385	639	35.83	215/6	3800	3500	6000	7.8	10.0	5.0	2.5	16	35
86	94	101	5.5	3.5	K302_0350 EZ401U	286	700	34.73	903/26	3800	3500	6000	1.2	10.0	4.0	1.5	16	26
86	145	158	8.4	2.3	K302_0350 EZ501U	385	700	34.73	903/26	3800	3500	6000	3.2	10.0	4.0	1.5	16	27
86	158	175	9.2	2.1	K302_0350 EZ402U	385	700	34.73	903/26	3800	3500	6000	1.9	10.0	4.0	1.5	16	27
86	232	290	13	1.4	K302_0350 EZ404U	385	700	34.73	903/26	3800	3500	6000	3.2	10.0	4.0	1.5	16	29
86	249	270	14	1.3	K302_0350 EZ502U	385	700	34.73	903/26	3800	3500	6000	5.5	10.0	4.0	1.5	16	29
86	249	280	14	1.3	K302_0350 EZ701U	385	700	34.73	903/26	3800	3500	6000	8.8	10.0	4.0	1.5	16	31
86	327	374	19	1.0	K302_0350 EZ503U	385	700	34.73	903/26	3800	3500	6000	7.8	10.0	4.0	1.5	16	30
89	91	98	7.2	2.7	K302_0340 EZ401U	277	501	33.62	1849/55	3800	3500	6000	1.1	10.0	4.0	1.5	16	26
89	140	153	11	1.8	K302_0340 EZ501U	300	501	33.62	1849/55	3800	3500	6000	3.1	10.0	4.0	1.5	16	27
89	153	170	12	1.6	K302_0340 EZ402U	300	501	33.62	1849/55	3800	3500	6000	1.8	10.0	4.0	1.5	16	27
89	225	280	18	1.1	K302_0340 EZ404U	300	501	33.62	1849/55	3800	3500	6000	3.2	10.0	4.0	1.5	16	29
89	241	261	19	1.0	K302_0340 EZ502U	300	501	33.62	1849/55	3800	3500	6000	5.4	10.0	4.0	1.5	16	29
89	241	271	19	1.0	K302_0340 EZ701U	300	501	33.62	1849/55	3800	3500	6000	8.7	10.0	4.0	1.5	16	31
92	134	147	8.3	2.4	K303_0330 EZ501U	385	582	32.65	44892/1375	3800	3500	6000	3.1	10.0	5.0	2.5	16	32
92	231	250	14	1.4	K303_0330 EZ502U	385	582	32.65	44892/1375	3800	3500	6000	5.4	10.0	5.0	2.5	16	34
92	303	346	19	1.1	K303_0330 EZ503U	385	582	32.65	44892/1375	3800	3500	6000	7.8	10.0	5.0	2.5	16	35
108	76	81	5.6	4.1	K302_0280 EZ401U	230	700	27.88	3569/128	3800	3500	6000	1.3	10.0	4.0	1.5	16	26
108	116	127	8.5	2.7	K302_0280 EZ501U	385	700	27.88	3569/128	3800	3500	6000	3.3	10.0	4.0	1.5	16	27
108	127	141	9.3	2.4	K302_0280 EZ402U	385	700	27.88	3569/128	3800	3500	6000	2.0	10.0	4.0	1.5	16	27
108	187	233	14	1.7	K302_0280 EZ404U	385	700	27.88	3569/128	3800	3500	6000	3.3	10.0	4.0	1.5	16	29
108	200	216	15	1.5	K302_0280 EZ502U	385	700	27.88	3569/128	3800	3500	6000	5.6	10.0	4.0	1.5	16	29
108	200	224	15	1.5	K302_0280 EZ701U	385	700	27.88	3569/128	3800	3500	6000	8.9	10.0	4.0	1.5	16	31
108	262	300	19	1.2	K302_0280 EZ503U	385	700	27.88	3569/128	3800	3500	6000	7.9	10.0	4.0	1.5	16	30
119	69	74	5.6	4.4	K302_0250 EZ401U	208	602	25.26	3612/143	3800	3500	6000	1.2	10.0	4.0	1.5	16	26
119	105	115	8.6	2.8	K302_0250 EZ501U	385	602	25.26	3612/143	3800	3500	6000	3.2	10.0	4.0	1.5	16	27
119	115	127	9.4	2.6	K302_0250 EZ402U	385	602	25.26	3612/143	3800	3500	6000	1.9	10.0	4.0	1.5	16	27
119	169	211	14	1.8	K302_0250 EZ404U	385	602	25.26	3612/143	3800	3500	6000	3.3	10.0	4.0	1.5	16	29
119	181	196	15	1.6	K302_0250 EZ502U	385	602	25.26	3612/143	3800	3500	6000	5.5	10.0	4.0	1.5	16	29
119	181	203	15	1.6	K302_0250 EZ701U	385	602	25.26	3612/143	3800	3500	6000	8.8	10.0	4.0	1.5	16	31
119	238	272	19	1.3	K302_0250 EZ503U	385	602	25.26	3612/143	3800	3500	6000	7.9	10.0	4.0	1.5	16	30
129	63	68	5.6	4.6	K302_0230 EZ401U	192	645	23.29	559/24	3800	3500	6000	1.4	10.0	4.0	1.5	16	26
129	97	106	8.7	3.0	K302_0230 EZ501U	361	645	23.29	559/24	3800	3500	6000	3.4	10.0	4.0	1.5	16	27
129	106	117	9.5	2.7	K302_0230 EZ402U	361	645	23.29	559/24	3800	3500	6000	2.1	10.0	4.0	1.5	16	27
129	156	194	14	1.9	K302_0230 EZ404U	385	645	23.29	559/24	3800	3500	6000	3.5	10.0	4.0	1.5	16	29
129	167	181	15	1.7	K302_0230 EZ502U	385	645	23.29	559/24	3800	3500	6000	5.7	10.0	4.0	1.5	16	29
129	167	188	15	1.7	K302_0230 EZ701U	385	700	23.29	559/24	3800	3500	6000	9.0	10.0	4.0	1.5	16	31
129	219	251	20	1.3	K302_0230 EZ503U	385	645	23.29	559/24	3800	3500	6000	8.1	10.0	4.0	1.5	16	30
129	271	325	24	1.1	K302_0230 EZ702U	385	700	23.29	559/24	3800	3500	6000	14	10.0	4.0	1.5	16	33
148	85	92	8.8	3.3	K302_0200 EZ501U	315	513	20.28	3569/176	3800	3500	6000	3.3	10.0	4.0	1.5	16	27
148	92	102	9.6	3.0	K302_0200 EZ402U	315	513	20.28	3569/176	3800	3500	6000	2.0	10.0	4.0	1.5	16	27
148	136	169	14	2.0	K302_0200 EZ404U	385	513	20.28	3569/176	3800	3500	6000	3.4	10.0	4.0	1.5	16	29
148	146	157	15	1.9	K302_0200 EZ502U	385	513	20.28	3569/176	3800	3500	6000	5.6	10.0	4.0	1.5	16	29
148	146	163	15	1.9	K302_0200 EZ701U	385	700	20.28	3569/176	3800	3500	6000	8.9	10.0	4.0	1.5	16	31
148	191	218	20	1.5	K302_0200 EZ503U	385	513	20.28	3569/176	3800	3500	6000	8.0	10.0	4.0	1.5	16	30
148	236	283	24	1.2	K302_0200 EZ702U	385	700	20.28	3569/176	3800	3500	6000	14	10.0	4.0	1.5	16	33
148	266	315	28	1.0	K302_0200 EZ505U	385	700	20.28	3569/176	3800	3500	6000	13	10.0	4.0	1.5	16	33
173	72	79	8.9	3.7	K302_0175 EZ501U	268	503	17.29	1591/92	3500	3100	5000	3.7	10.0	4.0	1.5	16	27
173	79	87	9.7	3.3	K302_0175 EZ402U	268	503	17.29	1591/92	3500	3100	5000	2.4	10.0	4.0	1.5	16	27
173	116	144	14	2.3	K302_0175 EZ404U	385	503	17.29	1591/92	3500	3100	5000	3.7	10.0	4.0	1.5	16	29
173	124	134	15	2.1	K302_0175 EZ502U	385	503	17.29	1591/92	3500	3100	5000	6.0	10.0	4.0	1.5	16	29
173	124	139	15	2.1	K302_0175 EZ701U	335	700	17.29	1591/92	3500	3100	5000	9.3	10.0	4.0	1.5	16	31
173	163	186	20	1.6	K302_0175 EZ503U	385	503	17.29	1591/92	3500	3100	5000	8.3	10.0	4.0	1.5	16	30

n_{2N} [rpm]	M_{2N} [Nm]	$M_{2,0}$ [Nm]	a_{th}	S	Type	M_{2acc} [Nm]	M_{2NOT} [Nm]	i	i_{exakt}	n_{1maxDB} EL1,2 [rpm]	n_{1maxDB} EL3,4,5,6 [rpm]	n_{1maxZB} [rpm]	J_1 [kgcm²]	$\Delta\varphi_2$ [arcmin]	$\Delta\varphi_{2redII}$ [arcmin]	$\Delta\varphi_{2redI}$ [arcmin]	C_2 [Nm/ arcmin]	m [kg]
K3 (n_{1N} = 3000 min^{-1}, $M_{2acc,max}$ = 390 Nm)																		
173	201	242	25	1.3	K302_0175 EZ702U	385	700	17.29	1591/92	3500	3100	5000	14	10.0	4.0	1.5	16	33
173	226	268	28	1.2	K302_0175 EZ505U	385	700	17.29	1591/92	3500	3100	5000	13	10.0	4.0	1.5	16	33
177	71	77	8.9	3.7	K302_0170 EZ501U	263	469	16.94	559/33	3800	3500	6000	3.4	10.0	4.0	1.5	16	27
177	77	85	9.7	3.4	K302_0170 EZ402U	263	469	16.94	559/33	3800	3500	6000	2.2	10.0	4.0	1.5	16	27
177	113	141	14	2.3	K302_0170 EZ404U	375	469	16.94	559/33	3800	3500	6000	3.5	10.0	4.0	1.5	16	29
177	122	131	15	2.2	K302_0170 EZ502U	375	469	16.94	559/33	3800	3500	6000	5.7	10.0	4.0	1.5	16	29
177	122	136	15	2.2	K302_0170 EZ701U	329	700	16.94	559/33	3800	3500	6000	9.0	10.0	4.0	1.5	16	31
177	159	182	20	1.6	K302_0170 EZ503U	375	469	16.94	559/33	3800	3500	6000	8.1	10.0	4.0	1.5	16	30
177	197	237	25	1.3	K302_0170 EZ702U	385	700	16.94	559/33	3800	3500	6000	14	10.0	4.0	1.5	16	33
177	222	263	28	1.2	K302_0170 EZ505U	385	700	16.94	559/33	3800	3500	6000	13	10.0	4.0	1.5	16	33
215	58	64	9.0	4.2	K302_0140 EZ501U	216	406	13.94	1505/108	3500	3100	5000	3.9	10.0	4.0	1.5	16	27
215	64	70	9.9	3.9	K302_0140 EZ402U	216	406	13.94	1505/108	3500	3100	5000	2.7	10.0	4.0	1.5	16	27
215	93	116	15	2.6	K302_0140 EZ404U	325	406	13.94	1505/108	3500	3100	5000	4.0	10.0	4.0	1.5	16	29
215	100	108	16	2.5	K302_0140 EZ502U	325	406	13.94	1505/108	3500	3100	5000	6.2	10.0	4.0	1.5	16	29
215	100	112	16	2.5	K302_0140 EZ701U	270	700	13.94	1505/108	3500	3100	5000	9.5	10.0	4.0	1.5	16	31
215	131	150	20	1.9	K302_0140 EZ503U	325	406	13.94	1505/108	3500	3100	5000	8.6	10.0	4.0	1.5	16	30
215	162	195	25	1.5	K302_0140 EZ702U	385	700	13.94	1505/108	3500	3100	5000	15	10.0	4.0	1.5	16	33
215	182	216	28	1.3	K302_0140 EZ505U	385	700	13.94	1505/108	3500	3100	5000	13	10.0	4.0	1.5	16	33
215	223	281	35	1.1	K302_0140 EZ703U	385	700	13.94	1505/108	3500	3100	5000	23	10.0	4.0	1.5	16	35
239	52	57	9.1	4.5	K302_0125 EZ501U	195	366	12.58	3182/253	3500	3100	5000	3.8	10.0	4.0	1.5	16	27
239	57	63	10	4.1	K302_0125 EZ402U	195	366	12.58	3182/253	3500	3100	5000	2.5	10.0	4.0	1.5	16	27
239	84	105	15	2.8	K302_0125 EZ404U	293	366	12.58	3182/253	3500	3100	5000	3.8	10.0	4.0	1.5	16	29
239	90	98	16	2.6	K302_0125 EZ502U	293	366	12.58	3182/253	3500	3100	5000	6.1	10.0	4.0	1.5	16	29
239	90	101	16	2.6	K302_0125 EZ701U	244	700	12.58	3182/253	3500	3100	5000	9.4	10.0	4.0	1.5	16	31
239	118	135	21	2.0	K302_0125 EZ503U	293	366	12.58	3182/253	3500	3100	5000	8.4	10.0	4.0	1.5	16	30
239	146	176	25	1.6	K302_0125 EZ702U	385	700	12.58	3182/253	3500	3100	5000	15	10.0	4.0	1.5	16	33
239	165	195	29	1.4	K302_0125 EZ505U	385	700	12.58	3182/253	3500	3100	5000	13	10.0	4.0	1.5	16	33
239	201	254	35	1.2	K302_0125 EZ703U	385	700	12.58	3182/253	3500	3100	5000	22	10.0	4.0	1.5	16	35
258	48	53	9.2	4.8	K302_0115 EZ501U	180	338	11.61	1161/100	3200	2800	4500	4.3	10.0	4.0	1.5	16	27
258	53	59	10	4.4	K302_0115 EZ402U	180	338	11.61	1161/100	3200	2800	4500	3.0	10.0	4.0	1.5	16	27
258	78	97	15	3.0	K302_0115 EZ404U	270	338	11.61	1161/100	3200	2800	4500	4.4	10.0	4.0	1.5	16	29
258	83	90	16	2.8	K302_0115 EZ502U	270	338	11.61	1161/100	3200	2800	4500	6.6	10.0	4.0	1.5	16	29
258	83	93	16	2.8	K302_0115 EZ701U	225	700	11.61	1161/100	3200	2800	4500	9.9	10.0	4.0	1.5	16	31
258	109	125	21	2.1	K302_0115 EZ503U	270	338	11.61	1161/100	3200	2800	4500	9.0	10.0	4.0	1.5	16	30
258	135	162	26	1.7	K302_0115 EZ702U	385	700	11.61	1161/100	3200	2800	4500	15	10.0	4.0	1.5	16	33
258	152	180	29	1.5	K302_0115 EZ505U	385	700	11.61	1161/100	3200	2800	4500	14	10.0	4.0	1.5	16	33
258	186	234	35	1.2	K302_0115 EZ703U	385	700	11.61	1161/100	3200	2800	4500	23	10.0	4.0	1.5	16	35
296	46	51	10	4.8	K302_0100 EZ402U	157	295	10.14	3010/297	3500	3100	5000	2.8	10.0	4.0	1.5	16	27
296	68	85	15	3.3	K302_0100 EZ404U	236	295	10.14	3010/297	3500	3100	5000	4.2	10.0	4.0	1.5	16	29
296	73	79	16	3.0	K302_0100 EZ502U	236	295	10.14	3010/297	3500	3100	5000	6.4	10.0	4.0	1.5	16	29
296	73	82	16	3.0	K302_0100 EZ701U	197	700	10.14	3010/297	3500	3100	5000	9.7	10.0	4.0	1.5	16	31
296	95	109	21	2.3	K302_0100 EZ503U	236	295	10.14	3010/297	3500	3100	5000	8.8	10.0	4.0	1.5	16	30
296	118	142	26	1.9	K302_0100 EZ702U	385	700	10.14	3010/297	3500	3100	5000	15	10.0	4.0	1.5	16	33
296	133	157	29	1.7	K302_0100 EZ505U	385	700	10.14	3010/297	3500	3100	5000	13	10.0	4.0	1.5	16	33
296	162	204	36	1.4	K302_0100 EZ703U	385	700	10.14	3010/297	3500	3100	5000	23	10.0	4.0	1.5	16	35
324	67	75	16	3.2	K302_0093 EZ701U	180	674	9.267	1075/116	3200	2800	4500	10	10.0	4.0	1.5	16	31
324	108	129	26	2.0	K302_0093 EZ702U	369	674	9.267	1075/116	3200	2800	4500	16	10.0	4.0	1.5	16	33
324	121	144	29	1.8	K302_0093 EZ505U	385	674	9.267	1075/116	3200	2800	4500	14	10.0	4.0	1.5	16	33
324	148	187	36	1.4	K302_0093 EZ703U	385	674	9.267	1075/116	3200	2800	4500	24	10.0	4.0	1.5	16	35
355	57	70	16	3.5	K302_0084 EZ404U	197	246	8.444	2322/275	3200	2800	4500	4.6	10.0	4.0	1.5	16	29
355	61	66	17	3.2	K302_0084 EZ502U	197	246	8.444	2322/275	3200	2800	4500	6.8	10.0	4.0	1.5	16	29
355	61	68	16	3.4	K302_0084 EZ701U	164	614	8.444	2322/275	3200	2800	4500	10	10.0	4.0	1.5	16	31
355	79	91	22	2.5	K302_0084 EZ503U	197	246	8.444	2322/275	3200	2800	4500	9.2	10.0	4.0	1.5	16	30
355	98	118	26	2.1	K302_0084 EZ702U	336	614	8.444	2322/275	3200	2800	4500	15	10.0	4.0	1.5	16	33
355	111	131	30	1.9	K302_0084 EZ505U	385	614	8.444	2322/275	3200	2800	4500	14	10.0	4.0	1.5	16	33
355	135	170	36	1.5	K302_0084 EZ703U	385	614	8.444	2322/275	3200	2800	4500	23	10.0	4.0	1.5	16	35
406	53	60	16	3.7	K302_0074 EZ701U	143	538	7.391	473/64	2700	2300	4000	11	10.0	4.0	1.5	16	31
406	86	103	27	2.3	K302_0074 EZ702U	294	538	7.391	473/64	2700	2300	4000	16	10.0	4.0	1.5	16	33
406	97	115	30	2.1	K302_0074 EZ505U	375	538	7.391	473/64	2700	2300	4000	15	10.0	4.0	1.5	16	33
406	118	149	37	1.7	K302_0074 EZ703U	375	538	7.391	473/64	2700	2300	4000	24	10.0	4.0	1.5	16	35
445	48	54	17	4.0	K302_0067 EZ701U	131	490	6.740	2150/319	3200	2800	4500	11	10.0	4.0	1.5	16	31
445	78	94	27	2.5	K302_0067 EZ702U	268	490	6.740	2150/319	3200	2800	4500	16	10.0	4.0	1.5	16	33
445	88	105	30	2.2	K302_0067 EZ505U	364	490	6.740	2150/319	3200	2800	4500	14	10.0	4.0	1.5	16	33
445	108	136	37	1.8	K302_0067 EZ703U	364	490	6.740	2150/319	3200	2800	4500	24	10.0	4.0	1.5	16	35

n_{2N} [rpm]	M_{2N} [Nm]	$M_{2,0}$ [Nm]	a_{th}	S	Type	M_{2acc} [Nm]	M_{2NOT} [Nm]	i	i_{exakt}	n_{1maxDB} EL1,2 [rpm]	n_{1maxDB} EL3,4,5,6 [rpm]	n_{1maxZB} [rpm]	J_1 [kgcm²]	$\Delta\varphi_2$ [arcmin]	$\Delta\varphi_{2redII}$ [arcmin]	$\Delta\varphi_{2redI}$ [arcmin]	C_2 [Nm/ arcmin]	m [kg]
K3 (n_{1N} = 3000 min^{-1}, $M_{2acc,max}$ = 390 Nm)																		
500	43	48	17	4.3	K302_0060 EZ701U	116	436	6.000	6/1	2700	2300	4000	12	10.0	4.0	1.5	16	31
500	70	84	27	2.7	K302_0060 EZ702U	239	436	6.000	6/1	2700	2300	4000	17	10.0	4.0	1.5	16	33
500	79	93	30	2.4	K302_0060 EZ505U	349	436	6.000	6/1	2700	2300	4000	16	10.0	4.0	1.5	16	33
500	96	121	37	1.9	K302_0060 EZ703U	349	436	6.000	6/1	2700	2300	4000	25	10.0	4.0	1.5	16	35
500	124	176	48	1.5	K302_0060 EZ705U	350	700	6.000	6/1	2700	2300	4000	37	10.0	4.0	1.5	16	41
558	39	43	17	4.6	K302_0054 EZ701U	104	391	5.375	43/8	2700	2300	4000	12	10.0	4.0	1.5	16	31
558	63	75	27	2.9	K302_0054 EZ702U	214	391	5.375	43/8	2700	2300	4000	17	10.0	4.0	1.5	16	33
558	70	83	31	2.5	K302_0054 EZ505U	313	391	5.375	43/8	2700	2300	4000	15	10.0	4.0	1.5	16	33
558	86	108	38	2.1	K302_0054 EZ703U	313	391	5.375	43/8	2700	2300	4000	25	10.0	4.0	1.5	16	35
687	51	61	28	3.3	K302_0044 EZ702U	174	317	4.364	48/11	2700	2300	4000	18	10.0	4.0	1.5	16	33
687	57	68	31	2.9	K302_0044 EZ505U	254	317	4.364	48/11	2700	2300	4000	16	10.0	4.0	1.5	16	33
687	70	88	38	2.4	K302_0044 EZ703U	254	317	4.364	48/11	2700	2300	4000	26	10.0	4.0	1.5	16	35
687	90	128	49	1.8	K302_0044 EZ705U	315	700	4.364	48/11	2700	2300	4000	38	10.0	4.0	1.5	16	41
750	47	56	28	3.5	K302_0040 EZ702U	159	291	4.000	4/1	2700	2300	4000	19	10.0	4.0	1.5	16	33
750	52	62	31	3.1	K302_0040 EZ505U	233	291	4.000	4/1	2700	2300	4000	17	10.0	4.0	1.5	16	33
750	64	81	38	2.5	K302_0040 EZ703U	233	291	4.000	4/1	2700	2300	4000	27	10.0	4.0	1.5	16	35
750	83	117	50	2.0	K302_0040 EZ705U	306	700	4.000	4/1	2700	2300	4000	39	10.0	4.0	1.5	16	41
K3 (n_{1N} = 4500 min^{-1}, $M_{2acc,max}$ = 390 Nm)																		
161	257	414	22	1.1	K302_0280 EZ505U	385	700	27.88	3569/128	3800	3500	6000	13	10.0	4.0	1.5	16	33
193	215	346	22	1.2	K302_0230 EZ505U	385	700	23.29	559/24	3800	3500	6000	13	10.0	4.0	1.5	16	33
222	187	301	22	1.3	K302_0200 EZ505U	385	700	20.28	3569/176	3800	3500	6000	13	10.0	4.0	1.5	16	33
222	238	393	28	1.0	K302_0200 EZ703U	385	700	20.28	3569/176	3800	3500	6000	22	10.0	4.0	1.5	16	35
260	159	257	22	1.4	K302_0175 EZ505U	385	700	17.29	1591/92	3500	3100	5000	13	10.0	4.0	1.5	16	33
260	203	335	29	1.1	K302_0175 EZ703U	385	700	17.29	1591/92	3500	3100	5000	22	10.0	4.0	1.5	16	35
266	156	251	22	1.5	K302_0170 EZ505U	385	700	16.94	559/33	3800	3500	6000	13	10.0	4.0	1.5	16	33
266	199	329	29	1.2	K302_0170 EZ703U	385	700	16.94	559/33	3800	3500	6000	22	10.0	4.0	1.5	16	35
323	128	207	23	1.7	K302_0140 EZ505U	385	700	13.94	1505/108	3500	3100	5000	13	10.0	4.0	1.5	16	33
323	164	270	29	1.3	K302_0140 EZ703U	385	700	13.94	1505/108	3500	3100	5000	23	10.0	4.0	1.5	16	35
358	116	187	23	1.8	K302_0125 EZ505U	385	700	12.58	3182/253	3500	3100	5000	13	10.0	4.0	1.5	16	33
358	148	244	29	1.4	K302_0125 EZ703U	385	700	12.58	3182/253	3500	3100	5000	22	10.0	4.0	1.5	16	35
388	107	172	23	1.9	K302_0115 EZ505U	385	700	11.61	1161/100	3200	2800	4500	14	10.0	4.0	1.5	16	33
388	136	225	30	1.5	K302_0115 EZ703U	385	700	11.61	1161/100	3200	2800	4500	23	10.0	4.0	1.5	16	35
444	93	150	23	2.1	K302_0100 EZ505U	385	700	10.14	3010/297	3500	3100	5000	13	10.0	4.0	1.5	16	33
444	119	197	30	1.6	K302_0100 EZ703U	385	700	10.14	3010/297	3500	3100	5000	23	10.0	4.0	1.5	16	35
486	85	138	24	2.2	K302_0093 EZ505U	385	674	9.267	1075/116	3200	2800	4500	14	10.0	4.0	1.5	16	33
486	109	180	30	1.7	K302_0093 EZ703U	385	674	9.267	1075/116	3200	2800	4500	24	10.0	4.0	1.5	16	35
533	78	125	24	2.3	K302_0084 EZ505U	385	614	8.444	2322/275	3200	2800	4500	14	10.0	4.0	1.5	16	33
533	99	164	30	1.8	K302_0084 EZ703U	385	614	8.444	2322/275	3200	2800	4500	23	10.0	4.0	1.5	16	35
668	62	100	24	2.7	K302_0067 EZ505U	364	490	6.740	2150/319	3200	2800	4500	14	10.0	4.0	1.5	16	33
668	79	131	31	2.1	K302_0067 EZ703U	364	490	6.740	2150/319	3200	2800	4500	24	10.0	4.0	1.5	16	35
K3 (n_{1N} = 6000 min^{-1}, $M_{2acc,max}$ = 390 Nm)																		
33	260	291	4.2	1.3	K303_1810 EZ302U	385	688	181.0	86903/480	3800	3500	6000	0.35	10.0	5.0	2.5	16	29
33	339	389	5.5	1.0	K303_1810 EZ303U	385	688	181.0	86903/480	3800	3500	6000	0.46	10.0	5.0	2.5	16	30
44	195	218	4.2	1.7	K303_1360 EZ302U	385	700	136.0	14147/104	3800	3500	6000	0.35	10.0	5.0	2.5	16	29
44	255	293	5.5	1.3	K303_1360 EZ303U	385	700	136.0	14147/104	3800	3500	6000	0.46	10.0	5.0	2.5	16	30
44	299	364	6.4	1.1	K303_1360 EZ401U	385	700	136.0	14147/104	3800	3500	6000	0.99	10.0	5.0	2.5	16	31
55	157	175	4.1	2.0	K303_1090 EZ302U	385	700	109.2	167743/1536	3800	3500	6000	0.36	10.0	5.0	2.5	16	29
55	205	235	5.3	1.5	K303_1090 EZ303U	385	700	109.2	167743/1536	3800	3500	6000	0.47	10.0	5.0	2.5	16	30
55	240	292	6.3	1.3	K303_1090 EZ401U	385	700	109.2	167743/1536	3800	3500	6000	1.0	10.0	5.0	2.5	16	31
66	131	147	4.2	2.2	K303_0910 EZ302U	385	585	91.23	26273/288	3800	3500	6000	0.37	10.0	5.0	2.5	16	29
66	171	196	5.4	1.7	K303_0910 EZ303U	385	585	91.23	26273/288	3800	3500	6000	0.48	10.0	5.0	2.5	16	30
66	201	244	6.4	1.5	K303_0910 EZ401U	385	585	91.23	26273/288	3800	3500	6000	1.0	10.0	5.0	2.5	16	31
67	293	379	7.9	1.2	K303_0900 EZ501U	385	700	90.06	16211/180	3800	3500	6000	3.1	10.0	5.0	2.5	16	32
76	114	128	5.2	2.0	K303_0790 EZ302U	380	509	79.42	167743/2112	3800	3500	6000	0.36	10.0	5.0	2.5	16	29
76	149	171	6.8	1.5	K303_0790 EZ303U	385	509	79.42	167743/2112	3800	3500	6000	0.47	10.0	5.0	2.5	16	30
76	175	213	8.0	1.3	K303_0790 EZ401U	385	509	79.42	167743/2112	3800	3500	6000	1.0	10.0	5.0	2.5	16	31
77	255	330	7.7	1.4	K303_0780 EZ501U	385	700	78.41	103501/1320	3800	3500	6000	3.1	10.0	5.0	2.5	16	32
86	101	113	5.5	2.1	K302_0690 EZ302U	238	298	69.43	6665/96	3800	3500	6000	0.37	10.0	4.0	1.5	16	24
86	132	152	7.1	1.6	K302_0690 EZ303U	238	298	69.43	6665/96	3800	3500	6000	0.48	10.0	4.0	1.5	16	25
86	155	189	8.4	1.4	K302_0690 EZ401U	238	298	69.43	6665/96	3800	3500	6000	1.0	10.0	4.0	1.5	16	26
89	97	109	4.2	2.8	K303_0680 EZ302U	324	434	67.73	74777/1104	3800	3500	6000	0.38	10.0	5.0	2.5	16	29
89	127	146	5.4	2.1	K303_0680 EZ303U	347	434	67.73	74777/1104	3800	3500	6000	0.49	10.0	5.0	2.5	16	30
89	149	181	6.4	1.8	K303_0680 EZ401U	347	434	67.73	74777/1104	3800	3500	6000	1.0	10.0	5.0	2.5	16	31
90	217	281	7.8	1.5	K303_0670 EZ501U	385	700	66.87	46139/690	3800	3500	6000	3.1	10.0	5.0	2.5	16	32

n_{2N} [rpm]	M_{2N} [Nm]	$M_{2,0}$ [Nm]	a_{th}	S	Type	M_{2acc} [Nm]	M_{2NOT} [Nm]	i	i_{exakt}	n_{1maxDB} EL1,2 [rpm]	n_{1maxDB} EL3,4,5,6 [rpm]	n_{1maxZB} [rpm]	J_1 [kgcm²]	$\Delta\varphi_2$ [arcmin]	$\Delta\varphi_{2redII}$ [arcmin]	$\Delta\varphi_{2redI}$ [arcmin]	C_2 [Nm/ arcmin]	m [kg]
K3 (n_{1N} = 6000 min^{-1}, $M_{2acc,max}$ = 390 Nm)																		
90	95	107	5.3	2.2	K303_0660 EZ302U	317	425	66.35	26273/396	3800	3500	6000	0.37	10.0	5.0	2.5	16	29
90	124	143	6.9	1.7	K303_0660 EZ303U	340	425	66.35	26273/396	3800	3500	6000	0.48	10.0	5.0	2.5	16	30
90	146	178	8.1	1.5	K303_0660 EZ401U	340	425	66.35	26273/396	3800	3500	6000	1.0	10.0	5.0	2.5	16	31
92	213	276	7.8	1.5	K303_0650 EZ501U	385	700	65.50	32422/495	3800	3500	6000	3.1	10.0	5.0	2.5	16	32
92	326	488	12	1.0	K303_0650 EZ502U	385	700	65.50	32422/495	3800	3500	6000	5.4	10.0	5.0	2.5	16	34
108	124	151	6.3	2.1	K302_0560 EZ401U	318	529	55.71	2451/44	3800	3500	6000	1.0	10.0	4.0	1.5	16	26
108	184	238	9.4	1.4	K302_0560 EZ501U	318	529	55.71	2451/44	3800	3500	6000	3.0	10.0	4.0	1.5	16	27
108	189	265	9.6	1.4	K302_0560 EZ402U	318	529	55.71	2451/44	3800	3500	6000	1.7	10.0	4.0	1.5	16	27
110	78	88	4.2	3.2	K303_0550 EZ302U	261	350	54.58	70735/1296	3800	3500	6000	0.40	10.0	5.0	2.5	16	29
110	102	117	5.5	2.5	K303_0550 EZ303U	280	350	54.58	70735/1296	3800	3500	6000	0.51	10.0	5.0	2.5	16	30
110	120	146	6.5	2.1	K303_0550 EZ401U	280	350	54.58	70735/1296	3800	3500	6000	1.0	10.0	5.0	2.5	16	31
111	175	227	7.9	1.7	K303_0540 EZ501U	385	700	53.88	8729/162	3800	3500	6000	3.1	10.0	5.0	2.5	16	32
111	268	402	12	1.1	K303_0540 EZ502U	385	700	53.88	8729/162	3800	3500	6000	5.4	10.0	5.0	2.5	16	34
119	73	82	6.9	2.1	K302_0500 EZ302U	173	217	50.49	6665/132	3800	3500	6000	0.37	10.0	4.0	1.5	16	24
119	96	110	9.1	1.6	K302_0500 EZ303U	173	217	50.49	6665/132	3800	3500	6000	0.48	10.0	4.0	1.5	16	25
119	113	137	11	1.4	K302_0500 EZ401U	173	217	50.49	6665/132	3800	3500	6000	1.0	10.0	4.0	1.5	16	26
122	71	79	5.3	2.8	K303_0490 EZ302U	235	316	49.26	74777/1518	3800	3500	6000	0.39	10.0	5.0	2.5	16	29
122	92	106	6.9	2.1	K303_0490 EZ303U	253	316	49.26	74777/1518	3800	3500	6000	0.50	10.0	5.0	2.5	16	30
122	108	132	8.1	1.8	K303_0490 EZ401U	253	316	49.26	74777/1518	3800	3500	6000	1.0	10.0	5.0	2.5	16	31
123	158	205	8.0	1.9	K303_0490 EZ501U	385	700	48.63	184556/3795	3800	3500	6000	3.1	10.0	5.0	2.5	16	32
123	242	363	12	1.2	K303_0490 EZ502U	385	700	48.63	184556/3795	3800	3500	6000	5.4	10.0	5.0	2.5	16	34
123	288	493	15	1.0	K303_0490 EZ503U	385	700	48.63	184556/3795	3800	3500	6000	7.8	10.0	5.0	2.5	16	35
130	103	126	5.5	2.8	K302_0460 EZ401U	381	688	46.23	1849/40	3800	3500	6000	1.1	10.0	4.0	1.5	16	26
130	152	197	8.2	1.9	K302_0460 EZ501U	385	688	46.23	1849/40	3800	3500	6000	3.1	10.0	4.0	1.5	16	27
130	157	220	8.4	1.8	K302_0460 EZ402U	385	688	46.23	1849/40	3800	3500	6000	1.8	10.0	4.0	1.5	16	27
130	233	350	12	1.2	K302_0460 EZ502U	385	688	46.23	1849/40	3800	3500	6000	5.4	10.0	4.0	1.5	16	29
130	233	354	12	1.2	K302_0460 EZ701U	385	688	46.23	1849/40	3800	3500	6000	8.7	10.0	4.0	1.5	16	31
130	260	377	14	1.1	K302_0460 EZ404U	385	688	46.23	1849/40	3800	3500	6000	3.1	10.0	4.0	1.5	16	29
130	278	475	15	1.0	K302_0460 EZ503U	385	688	46.23	1849/40	3800	3500	6000	7.7	10.0	4.0	1.5	16	30
134	146	189	8.1	2.0	K303_0450 EZ501U	385	700	44.89	11223/250	3800	3500	6000	3.1	10.0	5.0	2.5	16	32
134	223	335	12	1.3	K303_0450 EZ502U	385	700	44.89	11223/250	3800	3500	6000	5.4	10.0	5.0	2.5	16	34
134	266	455	15	1.1	K303_0450 EZ503U	385	700	44.89	11223/250	3800	3500	6000	7.8	10.0	5.0	2.5	16	35
148	90	110	8.0	2.1	K302_0410 EZ401U	231	385	40.51	4902/121	3800	3500	6000	1.1	10.0	4.0	1.5	16	26
148	134	173	12	1.4	K302_0410 EZ501U	231	385	40.51	4902/121	3800	3500	6000	3.0	10.0	4.0	1.5	16	27
148	138	193	12	1.4	K302_0410 EZ402U	231	385	40.51	4902/121	3800	3500	6000	1.8	10.0	4.0	1.5	16	27
153	127	165	8.1	2.2	K303_0390 EZ501U	385	698	39.19	34916/891	3800	3500	6000	3.1	10.0	5.0	2.5	16	32
153	195	292	12	1.4	K303_0390 EZ502U	385	698	39.19	34916/891	3800	3500	6000	5.4	10.0	5.0	2.5	16	34
153	232	397	15	1.2	K303_0390 EZ503U	385	698	39.19	34916/891	3800	3500	6000	7.8	10.0	5.0	2.5	16	35
167	116	151	8.2	2.3	K303_0360 EZ501U	385	639	35.83	215/6	3800	3500	6000	3.2	10.0	5.0	2.5	16	32
167	178	267	13	1.5	K303_0360 EZ502U	385	639	35.83	215/6	3800	3500	6000	5.5	10.0	5.0	2.5	16	34
167	212	363	15	1.3	K303_0360 EZ503U	385	639	35.83	215/6	3800	3500	6000	7.8	10.0	5.0	2.5	16	35
173	77	94	5.6	3.4	K302_0350 EZ401U	286	700	34.73	903/26	3800	3500	6000	1.2	10.0	4.0	1.5	16	26
173	115	148	8.3	2.3	K302_0350 EZ501U	385	700	34.73	903/26	3800	3500	6000	3.2	10.0	4.0	1.5	16	27
173	118	165	8.6	2.2	K302_0350 EZ402U	385	700	34.73	903/26	3800	3500	6000	1.9	10.0	4.0	1.5	16	27
173	175	263	13	1.5	K302_0350 EZ502U	385	700	34.73	903/26	3800	3500	6000	5.5	10.0	4.0	1.5	16	29
173	175	266	13	1.5	K302_0350 EZ701U	385	700	34.73	903/26	3800	3500	6000	8.8	10.0	4.0	1.5	16	31
173	195	283	14	1.4	K302_0350 EZ404U	385	700	34.73	903/26	3800	3500	6000	3.2	10.0	4.0	1.5	16	29
173	209	357	15	1.3	K302_0350 EZ503U	385	700	34.73	903/26	3800	3500	6000	7.8	10.0	4.0	1.5	16	30
178	75	91	5.9	3.3	K302_0340 EZ401U	277	501	33.62	1849/55	3800	3500	6000	1.1	10.0	4.0	1.5	16	26
178	111	143	8.7	2.3	K302_0340 EZ501U	300	501	33.62	1849/55	3800	3500	6000	3.1	10.0	4.0	1.5	16	27
178	114	160	9.0	2.2	K302_0340 EZ402U	300	501	33.62	1849/55	3800	3500	6000	1.8	10.0	4.0	1.5	16	27
178	170	254	13	1.5	K302_0340 EZ502U	300	501	33.62	1849/55	3800	3500	6000	5.4	10.0	4.0	1.5	16	29
178	170	258	13	1.5	K302_0340 EZ701U	300	501	33.62	1849/55	3800	3500	6000	8.7	10.0	4.0	1.5	16	31
178	189	274	15	1.3	K302_0340 EZ404U	300	501	33.62	1849/55	3800	3500	6000	3.2	10.0	4.0	1.5	16	29
178	202	346	16	1.2	K302_0340 EZ503U	300	501	33.62	1849/55	3800	3500	6000	7.8	10.0	4.0	1.5	16	30
184	106	137	8.3	2.4	K303_0330 EZ501U	385	582	32.65	44892/1375	3800	3500	6000	3.1	10.0	5.0	2.5	16	32
184	162	243	13	1.6	K303_0330 EZ502U	385	582	32.65	44892/1375	3800	3500	6000	5.4	10.0	5.0	2.5	16	34
184	194	331	15	1.3	K303_0330 EZ503U	385	582	32.65	44892/1375	3800	3500	6000	7.8	10.0	5.0	2.5	16	35
215	62	76	5.8	3.9	K302_0280 EZ401U	230	700	27.88	3569/128	3800	3500	6000	1.3	10.0	4.0	1.5	16	26
215	92	119	8.5	2.7	K302_0280 EZ501U	385	700	27.88	3569/128	3800	3500	6000	3.3	10.0	4.0	1.5	16	27
215	95	133	8.8	2.6	K302_0280 EZ402U	385	700	27.88	3569/128	3800	3500	6000	2.0	10.0	4.0	1.5	16	27
215	141	211	13	1.7	K302_0280 EZ502U	385	700	27.88	3569/128	3800	3500	6000	5.6	10.0	4.0	1.5	16	29
215	141	214	13	1.7	K302_0280 EZ701U	385	700	27.88	3569/128	3800	3500	6000	8.9	10.0	4.0	1.5	16	31
215	157	227	15	1.6	K302_0280 EZ404U	385	700	27.88	3569/128	3800	3500	6000	3.3	10.0	4.0	1.5	16	29

n_{2N} [rpm]	M_{2N} [Nm]	$M_{2,0}$ [Nm]	a_{th}	S	Type	M_{2acc} [Nm]	M_{2NOT} [Nm]	i	i_{exakt}	n_{1maxDB} EL1,2 [rpm]	n_{1maxDB} EL3,4,5,6 [rpm]	n_{1maxZB} [rpm]	J_1 [kgcm²]	$\Delta\varphi_2$ [arcmin]	$\Delta\varphi_{2redII}$ [arcmin]	$\Delta\varphi_{2redI}$ [arcmin]	C_2 [Nm/arcmin]	m [kg]
K3 (n_{1N} = 6000 min^{-1}, $M_{2acc,max}$ = 390 Nm)																		
215	168	287	16	1.5	K302_0280 EZ503U	385	700	27.88	3569/128	3800	3500	6000	7.9	10.0	4.0	1.5	16	30
215	195	387	18	1.3	K302_0280 EZ702U	385	700	27.88	3569/128	3800	3500	6000	14	10.0	4.0	1.5	16	33
238	56	69	5.8	4.2	K302_0250 EZ401U	208	602	25.26	3612/143	3800	3500	6000	1.2	10.0	4.0	1.5	16	26
238	83	108	8.6	2.8	K302_0250 EZ501U	385	602	25.26	3612/143	3800	3500	6000	3.2	10.0	4.0	1.5	16	27
238	86	120	8.8	2.8	K302_0250 EZ402U	385	602	25.26	3612/143	3800	3500	6000	1.9	10.0	4.0	1.5	16	27
238	127	191	13	1.9	K302_0250 EZ502U	385	602	25.26	3612/143	3800	3500	6000	5.5	10.0	4.0	1.5	16	29
238	127	194	13	1.9	K302_0250 EZ701U	385	602	25.26	3612/143	3800	3500	6000	8.8	10.0	4.0	1.5	16	31
238	142	206	15	1.7	K302_0250 EZ404U	385	602	25.26	3612/143	3800	3500	6000	3.3	10.0	4.0	1.5	16	29
238	152	260	16	1.6	K302_0250 EZ503U	385	602	25.26	3612/143	3800	3500	6000	7.9	10.0	4.0	1.5	16	30
258	52	63	5.8	4.4	K302_0230 EZ401U	192	645	23.29	559/24	3800	3500	6000	1.4	10.0	4.0	1.5	16	26
258	77	99	8.6	3.0	K302_0230 EZ501U	361	645	23.29	559/24	3800	3500	6000	3.4	10.0	4.0	1.5	16	27
258	79	111	8.9	2.9	K302_0230 EZ402U	361	645	23.29	559/24	3800	3500	6000	2.1	10.0	4.0	1.5	16	27
258	117	176	13	2.0	K302_0230 EZ502U	385	645	23.29	559/24	3800	3500	6000	5.7	10.0	4.0	1.5	16	29
258	117	178	13	2.0	K302_0230 EZ701U	385	700	23.29	559/24	3800	3500	6000	9.0	10.0	4.0	1.5	16	31
258	131	190	15	1.8	K302_0230 EZ404U	385	645	23.29	559/24	3800	3500	6000	3.5	10.0	4.0	1.5	16	29
258	140	239	16	1.6	K302_0230 EZ503U	385	645	23.29	559/24	3800	3500	6000	8.1	10.0	4.0	1.5	16	30
258	163	323	18	1.4	K302_0230 EZ702U	385	700	23.29	559/24	3800	3500	6000	14	10.0	4.0	1.5	16	33
296	45	55	5.9	4.9	K302_0200 EZ401U	167	513	20.28	3569/176	3800	3500	6000	1.3	10.0	4.0	1.5	16	26
296	67	87	8.7	3.3	K302_0200 EZ501U	315	513	20.28	3569/176	3800	3500	6000	3.3	10.0	4.0	1.5	16	27
296	69	96	9.0	3.2	K302_0200 EZ402U	315	513	20.28	3569/176	3800	3500	6000	2.0	10.0	4.0	1.5	16	27
296	102	153	13	2.2	K302_0200 EZ502U	385	513	20.28	3569/176	3800	3500	6000	5.6	10.0	4.0	1.5	16	29
296	102	155	13	2.2	K302_0200 EZ701U	385	700	20.28	3569/176	3800	3500	6000	8.9	10.0	4.0	1.5	16	31
296	114	165	15	1.9	K302_0200 EZ404U	385	513	20.28	3569/176	3800	3500	6000	3.4	10.0	4.0	1.5	16	29
296	122	208	16	1.8	K302_0200 EZ503U	385	513	20.28	3569/176	3800	3500	6000	8.0	10.0	4.0	1.5	16	30
296	142	281	18	1.6	K302_0200 EZ702U	385	700	20.28	3569/176	3800	3500	6000	14	10.0	4.0	1.5	16	33
354	56	72	8.9	3.7	K302_0170 EZ501U	263	469	16.94	559/33	3800	3500	6000	3.4	10.0	4.0	1.5	16	27
354	58	81	9.1	3.6	K302_0170 EZ402U	263	469	16.94	559/33	3800	3500	6000	2.2	10.0	4.0	1.5	16	27
354	85	128	14	2.4	K302_0170 EZ502U	375	469	16.94	559/33	3800	3500	6000	5.7	10.0	4.0	1.5	16	29
354	85	130	14	2.4	K302_0170 EZ701U	329	700	16.94	559/33	3800	3500	6000	9.0	10.0	4.0	1.5	16	31
354	95	138	15	2.2	K302_0170 EZ404U	375	469	16.94	559/33	3800	3500	6000	3.5	10.0	4.0	1.5	16	29
354	102	174	16	2.0	K302_0170 EZ503U	375	469	16.94	559/33	3800	3500	6000	8.1	10.0	4.0	1.5	16	30
354	118	235	19	1.8	K302_0170 EZ702U	385	700	16.94	559/33	3800	3500	6000	14	10.0	4.0	1.5	16	33
K4 (n_{1N} = 2000 min^{-1}, $M_{2acc,max}$ = 600 Nm)																		
216	349	392	54	1.1	K402_0092 EZ813U	600	1100	9.238	2365/256	3000	2600	4500	108	10.0	4.0	1.5	31	71
239	317	355	54	1.1	K402_0084 EZ813U	587	1100	8.377	645/77	3000	2600	4500	107	10.0	4.0	1.5	31	71
268	282	316	55	1.2	K402_0075 EZ813U	564	1100	7.456	1849/248	2600	2200	3800	109	10.0	4.0	1.5	31	71
298	254	285	55	1.3	K402_0067 EZ813U	545	1100	6.719	215/32	3000	2600	4500	109	10.0	4.0	1.5	31	71
333	227	255	56	1.4	K402_0060 EZ813U	525	1100	6.000	6/1	2600	2200	3800	111	10.0	4.0	1.5	31	71
369	205	230	56	1.5	K402_0054 EZ813U	508	1052	5.422	1849/341	2600	2200	3800	110	10.0	4.0	1.5	31	71
369	304	362	83	1.0	K402_0054 EZ815U	508	1052	5.422	1849/341	2600	2200	3800	173	10.0	4.0	1.5	31	84
458	165	185	57	1.7	K402_0044 EZ813U	472	847	4.364	48/11	2600	2200	3800	113	10.0	4.0	1.5	31	71
458	244	291	85	1.2	K402_0044 EZ815U	472	847	4.364	48/11	2600	2200	3800	176	10.0	4.0	1.5	31	84
500	151	170	58	1.8	K402_0040 EZ813U	459	776	4.000	4/1	2600	2200	3800	114	10.0	4.0	1.5	31	71
500	224	267	86	1.2	K402_0040 EZ815U	459	776	4.000	4/1	2600	2200	3800	177	10.0	4.0	1.5	31	84
K4 (n_{1N} = 3000 min^{-1}, $M_{2acc,max}$ = 600 Nm)																		
14	332	350	4.1	1.3	K403_2180 EZ302U	508	847	218.2	38399/176	3600	3300	5500	0.35	10.0	5.0	2.5	31	42
17	276	291	3.4	1.8	K403_1810 EZ302U	600	977	181.4	14147/78	3600	3300	5500	0.35	10.0	5.0	2.5	31	42
17	359	380	4.4	1.4	K403_1810 EZ303U	600	977	181.4	14147/78	3600	3300	5500	0.46	10.0	5.0	2.5	31	43
17	485	520	6.0	1.0	K403_1810 EZ401U	600	977	181.4	14147/78	3600	3300	5500	0.99	10.0	5.0	2.5	31	44
22	207	219	3.4	2.2	K403_1360 EZ302U	600	811	136.1	196037/1440	3600	3300	5500	0.36	10.0	5.0	2.5	31	42
22	269	285	4.4	1.7	K403_1360 EZ303U	600	811	136.1	196037/1440	3600	3300	5500	0.47	10.0	5.0	2.5	31	43
22	364	390	5.9	1.3	K403_1360 EZ401U	600	811	136.1	196037/1440	3600	3300	5500	1.0	10.0	5.0	2.5	31	44
28	165	175	3.3	2.7	K403_1090 EZ302U	520	697	108.8	62651/576	3600	3300	5500	0.38	10.0	5.0	2.5	31	42
28	215	228	4.4	2.0	K403_1090 EZ303U	558	697	108.8	62651/576	3600	3300	5500	0.49	10.0	5.0	2.5	31	43
28	291	312	5.9	1.5	K403_1090 EZ401U	558	697	108.8	62651/576	3600	3300	5500	1.0	10.0	5.0	2.5	31	44
28	441	482	7.2	1.2	K403_1070 EZ501U	600	1100	107.4	38657/360	3600	3300	5500	3.1	10.0	5.0	2.5	31	45
33	139	147	3.4	3.0	K403_0910 EZ302U	436	585	91.23	26273/288	3600	3300	5500	0.39	10.0	5.0	2.5	31	42
33	181	191	4.4	2.3	K403_0910 EZ303U	468	585	91.23	26273/288	3600	3300	5500	0.50	10.0	5.0	2.5	31	43
33	244	262	5.9	1.7	K403_0910 EZ401U	468	585	91.23	26273/288	3600	3300	5500	1.0	10.0	5.0	2.5	31	44
33	370	405	6.9	1.5	K403_0900 EZ501U	600	1100	90.06	16211/180	3600	3300	5500	3.1	10.0	5.0	2.5	31	45
38	120	127	4.2	2.7	K403_0790 EZ302U	378	507	79.11	62651/792	3600	3300	5500	0.38	10.0	5.0	2.5	31	42
38	157	166	5.5	2.0	K403_0790 EZ303U	406	507	79.11	62651/792	3600	3300	5500	0.49	10.0	5.0	2.5	31	43
38	212	227	7.5	1.5	K403_0790 EZ401U	406	507	79.11	62651/792	3600	3300	5500	1.0	10.0	5.0	2.5	31	44
38	321	351	6.7	1.7	K403_0780 EZ501U	600	1100	78.10	38657/495	3600	3300	5500	3.1	10.0	5.0	2.5	31	45

n_{2N} [rpm]	M_{2N} [Nm]	$M_{2,0}$ [Nm]	a_{th}	S	Type	M_{2acc} [Nm]	M_{2NOT} [Nm]	i	i_{exakt}	n_{1maxDB} EL1,2 [rpm]	n_{1maxDB} EL3,4,5,6 [rpm]	n_{1maxZB} [rpm]	J_1 [kgcm²]	$\Delta\varphi_2$ [arcmin]	$\Delta\varphi_{2redII}$ [arcmin]	$\Delta\varphi_{2redI}$ [arcmin]	C_2 [Nm/ arcmin]	m [kg]
K4 (n_{1N} = 3000 min^{-1}, $M_{2acc,max}$ = 600 Nm)																		
43	289	316	9.7	1.3	K402_0690 EZ501U	445	741	69.34	5547/80	3600	3300	5500	3.0	10.0	4.0	1.5	31	41
45	277	302	6.4	2.0	K403_0670 EZ501U	600	1100	67.30	21199/315	3600	3300	5500	3.1	10.0	5.0	2.5	31	45
45	476	515	11	1.2	K403_0670 EZ502U	600	1100	67.30	21199/315	3600	3300	5500	5.4	10.0	5.0	2.5	31	46
45	101	107	4.3	3.0	K403_0660 EZ302U	317	425	66.35	26273/396	3600	3300	5500	0.40	10.0	5.0	2.5	31	42
45	131	139	5.6	2.3	K403_0660 EZ303U	340	425	66.35	26273/396	3600	3300	5500	0.51	10.0	5.0	2.5	31	43
45	178	190	7.5	1.7	K403_0660 EZ401U	340	425	66.35	26273/396	3600	3300	5500	1.0	10.0	5.0	2.5	31	44
46	269	294	6.4	2.0	K403_0650 EZ501U	600	1013	65.50	32422/495	3600	3300	5500	3.1	10.0	5.0	2.5	31	45
46	463	501	11	1.2	K403_0650 EZ502U	600	1013	65.50	32422/495	3600	3300	5500	5.4	10.0	5.0	2.5	31	46
54	232	254	8.1	1.8	K402_0560 EZ501U	508	847	55.71	2451/44	3600	3300	5500	3.1	10.0	4.0	1.5	31	41
54	400	432	14	1.1	K402_0560 EZ502U	508	847	55.71	2451/44	3600	3300	5500	5.4	10.0	4.0	1.5	31	42
54	400	448	14	1.1	K402_0560 EZ701U	508	847	55.71	2451/44	3600	3300	5500	8.7	10.0	4.0	1.5	31	44
56	221	241	6.1	2.5	K403_0540 EZ501U	600	957	53.69	38657/720	3600	3300	5500	3.2	10.0	5.0	2.5	31	45
56	380	411	10	1.4	K403_0540 EZ502U	600	957	53.69	38657/720	3600	3300	5500	5.5	10.0	5.0	2.5	31	46
56	498	570	14	1.1	K403_0540 EZ503U	600	957	53.69	38657/720	3600	3300	5500	7.9	10.0	5.0	2.5	31	48
59	210	230	12	1.3	K402_0500 EZ501U	323	539	50.43	5547/110	3600	3300	5500	3.0	10.0	4.0	1.5	31	41
61	201	220	5.9	2.7	K403_0490 EZ501U	600	869	48.94	169592/3465	3600	3300	5500	3.1	10.0	5.0	2.5	31	45
61	346	374	10	1.6	K403_0490 EZ502U	600	869	48.94	169592/3465	3600	3300	5500	5.4	10.0	5.0	2.5	31	46
61	454	519	13	1.2	K403_0490 EZ503U	600	869	48.94	169592/3465	3600	3300	5500	7.8	10.0	5.0	2.5	31	48
65	193	211	6.1	2.8	K402_0460 EZ501U	600	977	46.31	602/13	3600	3300	5500	3.2	10.0	4.0	1.5	31	41
65	332	359	11	1.6	K402_0460 EZ502U	600	977	46.31	602/13	3600	3300	5500	5.5	10.0	4.0	1.5	31	42
65	332	373	11	1.6	K402_0460 EZ701U	600	977	46.31	602/13	3600	3300	5500	8.8	10.0	4.0	1.5	31	44
65	436	499	14	1.2	K402_0460 EZ503U	600	977	46.31	602/13	3600	3300	5500	7.9	10.0	4.0	1.5	31	44
67	183	200	5.9	3.0	K403_0450 EZ501U	600	794	44.54	1247/28	3600	3300	5500	3.2	10.0	5.0	2.5	31	45
67	315	341	10	1.7	K403_0450 EZ502U	600	794	44.54	1247/28	3600	3300	5500	5.5	10.0	5.0	2.5	31	46
67	413	473	13	1.3	K403_0450 EZ503U	600	794	44.54	1247/28	3600	3300	5500	7.9	10.0	5.0	2.5	31	48
74	169	185	10	1.8	K402_0410 EZ501U	370	616	40.51	4902/121	3600	3300	5500	3.1	10.0	4.0	1.5	31	41
74	291	314	18	1.1	K402_0410 EZ502U	370	616	40.51	4902/121	3600	3300	5500	5.4	10.0	4.0	1.5	31	42
74	291	326	18	1.1	K402_0410 EZ701U	370	616	40.51	4902/121	3600	3300	5500	8.7	10.0	4.0	1.5	31	44
77	161	175	6.1	3.1	K403_0390 EZ501U	557	696	39.05	38657/990	3600	3300	5500	3.2	10.0	5.0	2.5	31	45
77	276	299	11	1.8	K403_0390 EZ502U	557	696	39.05	38657/990	3600	3300	5500	5.5	10.0	5.0	2.5	31	46
77	362	414	14	1.4	K403_0390 EZ503U	557	696	39.05	38657/990	3600	3300	5500	7.9	10.0	5.0	2.5	31	48
84	147	161	6.0	3.4	K403_0360 EZ501U	509	637	35.72	13717/384	3600	3300	5500	3.3	10.0	5.0	2.5	31	45
84	253	273	10	2.0	K403_0360 EZ502U	509	637	35.72	13717/384	3600	3300	5500	5.6	10.0	5.0	2.5	31	46
84	331	379	14	1.5	K403_0360 EZ503U	509	637	35.72	13717/384	3600	3300	5500	8.0	10.0	5.0	2.5	31	48
86	145	158	6.1	3.4	K402_0350 EZ501U	539	811	34.76	4171/120	3600	3300	5500	3.4	10.0	4.0	1.5	31	41
86	249	270	10	2.0	K402_0350 EZ502U	600	811	34.76	4171/120	3600	3300	5500	5.7	10.0	4.0	1.5	31	42
86	249	280	10	2.0	K402_0350 EZ701U	600	1100	34.76	4171/120	3600	3300	5500	9.0	10.0	4.0	1.5	31	44
86	327	374	14	1.5	K402_0350 EZ503U	600	811	34.76	4171/120	3600	3300	5500	8.0	10.0	4.0	1.5	31	44
86	405	486	17	1.2	K402_0350 EZ702U	600	1100	34.76	4171/120	3600	3300	5500	14	10.0	4.0	1.5	31	47
86	455	539	19	1.1	K402_0350 EZ505U	600	1100	34.76	4171/120	3600	3300	5500	13	10.0	4.0	1.5	31	47
89	140	154	7.8	2.8	K402_0340 EZ501U	467	710	33.68	4816/143	3600	3300	5500	3.2	10.0	4.0	1.5	31	41
89	242	261	13	1.6	K402_0340 EZ502U	467	710	33.68	4816/143	3600	3300	5500	5.5	10.0	4.0	1.5	31	42
89	242	271	13	1.6	K402_0340 EZ701U	467	710	33.68	4816/143	3600	3300	5500	8.8	10.0	4.0	1.5	31	44
89	317	363	17	1.2	K402_0340 EZ503U	467	710	33.68	4816/143	3600	3300	5500	7.9	10.0	4.0	1.5	31	44
93	133	146	6.4	3.5	K403_0320 EZ501U	462	577	32.39	2494/77	3600	3300	5500	3.2	10.0	5.0	2.5	31	45
93	229	248	11	2.0	K403_0320 EZ502U	462	577	32.39	2494/77	3600	3300	5500	5.5	10.0	5.0	2.5	31	46
93	300	344	14	1.5	K403_0320 EZ503U	462	577	32.39	2494/77	3600	3300	5500	7.9	10.0	5.0	2.5	31	48
108	116	127	6.2	4.0	K402_0280 EZ501U	431	746	27.77	1333/48	3600	3300	5500	3.6	10.0	4.0	1.5	31	41
108	199	216	11	2.3	K402_0280 EZ502U	597	746	27.77	1333/48	3600	3300	5500	5.9	10.0	4.0	1.5	31	42
108	199	224	11	2.3	K402_0280 EZ701U	539	1100	27.77	1333/48	3600	3300	5500	9.2	10.0	4.0	1.5	31	44
108	261	299	14	1.8	K402_0280 EZ503U	597	746	27.77	1333/48	3600	3300	5500	8.2	10.0	4.0	1.5	31	44
108	323	388	17	1.4	K402_0280 EZ702U	600	1100	27.77	1333/48	3600	3300	5500	14	10.0	4.0	1.5	31	47
108	364	431	19	1.3	K402_0280 EZ505U	600	1100	27.77	1333/48	3600	3300	5500	13	10.0	4.0	1.5	31	47
108	444	560	24	1.0	K402_0280 EZ703U	600	1100	27.77	1333/48	3600	3300	5500	22	10.0	4.0	1.5	31	49
119	105	115	6.3	4.3	K402_0250 EZ501U	392	589	25.28	4171/165	3600	3300	5500	3.4	10.0	4.0	1.5	31	41
119	181	196	11	2.5	K402_0250 EZ502U	472	589	25.28	4171/165	3600	3300	5500	5.7	10.0	4.0	1.5	31	42
119	181	204	11	2.5	K402_0250 EZ701U	490	1001	25.28	4171/165	3600	3300	5500	9.0	10.0	4.0	1.5	31	44
119	238	272	14	1.9	K402_0250 EZ503U	472	589	25.28	4171/165	3600	3300	5500	8.1	10.0	4.0	1.5	31	44
119	294	353	17	1.5	K402_0250 EZ702U	600	1001	25.28	4171/165	3600	3300	5500	14	10.0	4.0	1.5	31	47
119	331	392	20	1.4	K402_0250 EZ505U	600	1001	25.28	4171/165	3600	3300	5500	13	10.0	4.0	1.5	31	47
119	405	510	24	1.1	K402_0250 EZ703U	600	1001	25.28	4171/165	3600	3300	5500	22	10.0	4.0	1.5	31	49
129	97	106	6.3	4.5	K402_0230 EZ501U	361	678	23.29	559/24	3600	3300	5500	3.8	10.0	4.0	1.5	31	41
129	167	181	11	2.6	K402_0230 EZ502U	542	678	23.29	559/24	3600	3300	5500	6.1	10.0	4.0	1.5	31	42
129	167	188	11	2.6	K402_0230 EZ701U	452	1100	23.29	559/24	3600	3300	5500	9.4	10.0	4.0	1.5	31	44

n_{2N} [rpm]	M_{2N} [Nm]	$M_{2,0}$ [Nm]	a_{th}	S	Type	M_{2acc} [Nm]	M_{2NOT} [Nm]	i	i_{exakt}	n_{1maxDB} EL1,2 [rpm]	n_{1maxDB} EL3,4,5,6 [rpm]	n_{1maxZB} [rpm]	J_1 [kgcm²]	$\Delta\varphi_2$ [arcmin]	$\Delta\varphi_{2redII}$ [arcmin]	$\Delta\varphi_{2redI}$ [arcmin]	C_2 [Nm/ arcmin]	m [kg]
K4 (n_{1N} = 3000 min^{-1}, $M_{2acc,max}$ = 600 Nm)																		
129	219	251	14	2.0	K402_0230 EZ503U	542	678	23.29	559/24	3600	3300	5500	8.4	10.0	4.0	1.5	31	44
129	271	325	18	1.6	K402_0230 EZ702U	600	1100	23.29	559/24	3600	3300	5500	15	10.0	4.0	1.5	31	47
129	305	361	20	1.4	K402_0230 EZ505U	600	1100	23.29	559/24	3600	3300	5500	13	10.0	4.0	1.5	31	47
129	373	470	24	1.2	K402_0230 EZ703U	600	1100	23.29	559/24	3600	3300	5500	22	10.0	4.0	1.5	31	49
149	84	92	6.4	4.9	K402_0200 EZ501U	313	542	20.20	1333/66	3600	3300	5500	3.6	10.0	4.0	1.5	31	41
149	145	157	11	2.9	K402_0200 EZ502U	434	542	20.20	1333/66	3600	3300	5500	5.9	10.0	4.0	1.5	31	42
149	145	163	11	2.9	K402_0200 EZ701U	392	1100	20.20	1333/66	3600	3300	5500	9.2	10.0	4.0	1.5	31	44
149	190	217	14	2.2	K402_0200 EZ503U	434	542	20.20	1333/66	3600	3300	5500	8.3	10.0	4.0	1.5	31	44
149	235	282	18	1.8	K402_0200 EZ702U	600	1100	20.20	1333/66	3600	3300	5500	14	10.0	4.0	1.5	31	47
149	264	313	20	1.6	K402_0200 EZ505U	600	1100	20.20	1333/66	3600	3300	5500	13	10.0	4.0	1.5	31	47
149	323	407	24	1.3	K402_0200 EZ703U	600	1100	20.20	1333/66	3600	3300	5500	22	10.0	4.0	1.5	31	49
172	125	140	11	3.2	K402_0175 EZ701U	338	1100	17.41	731/42	3400	3000	5000	9.9	10.0	4.0	1.5	31	44
172	203	243	18	2.0	K402_0175 EZ702U	600	1100	17.41	731/42	3400	3000	5000	15	10.0	4.0	1.5	31	47
172	228	270	20	1.7	K402_0175 EZ505U	600	1100	17.41	731/42	3400	3000	5000	14	10.0	4.0	1.5	31	47
172	279	351	25	1.4	K402_0175 EZ703U	600	1100	17.41	731/42	3400	3000	5000	23	10.0	4.0	1.5	31	49
172	360	510	32	1.1	K402_0175 EZ705U	600	1100	17.41	731/42	3400	3000	5000	35	10.0	4.0	1.5	31	54
177	122	131	11	3.2	K402_0170 EZ502U	394	493	16.94	559/33	3600	3300	5500	6.2	10.0	4.0	1.5	31	42
177	122	136	11	3.2	K402_0170 EZ701U	329	1013	16.94	559/33	3600	3300	5500	9.5	10.0	4.0	1.5	31	44
177	159	182	15	2.5	K402_0170 EZ503U	394	493	16.94	559/33	3600	3300	5500	8.5	10.0	4.0	1.5	31	44
177	197	237	18	2.0	K402_0170 EZ702U	600	1013	16.94	559/33	3600	3300	5500	15	10.0	4.0	1.5	31	47
177	222	263	20	1.8	K402_0170 EZ505U	600	1013	16.94	559/33	3600	3300	5500	13	10.0	4.0	1.5	31	47
177	271	342	25	1.4	K402_0170 EZ703U	600	1013	16.94	559/33	3600	3300	5500	23	10.0	4.0	1.5	31	49
177	350	496	32	1.1	K402_0170 EZ705U	600	1100	16.94	559/33	3600	3300	5500	35	10.0	4.0	1.5	31	54
216	100	112	11	3.7	K402_0140 EZ701U	269	1010	13.89	1333/96	3400	3000	5000	10	10.0	4.0	1.5	31	44
216	162	194	18	2.3	K402_0140 EZ702U	552	1010	13.89	1333/96	3400	3000	5000	16	10.0	4.0	1.5	31	47
216	182	215	21	2.0	K402_0140 EZ505U	600	1010	13.89	1333/96	3400	3000	5000	14	10.0	4.0	1.5	31	47
216	222	280	25	1.7	K402_0140 EZ703U	600	1010	13.89	1333/96	3400	3000	5000	24	10.0	4.0	1.5	31	49
216	287	407	33	1.3	K402_0140 EZ705U	600	1100	13.89	1333/96	3400	3000	5000	36	10.0	4.0	1.5	31	54
237	91	102	11	3.9	K402_0125 EZ701U	246	869	12.66	2924/231	3400	3000	5000	10	10.0	4.0	1.5	31	44
237	147	177	18	2.4	K402_0125 EZ702U	503	869	12.66	2924/231	3400	3000	5000	15	10.0	4.0	1.5	31	47
237	166	196	21	2.1	K402_0125 EZ505U	600	869	12.66	2924/231	3400	3000	5000	14	10.0	4.0	1.5	31	47
237	203	255	25	1.8	K402_0125 EZ703U	600	869	12.66	2924/231	3400	3000	5000	23	10.0	4.0	1.5	31	49
237	262	371	33	1.4	K402_0125 EZ705U	600	1100	12.66	2924/231	3400	3000	5000	36	10.0	4.0	1.5	31	54
260	83	93	11	4.2	K402_0115 EZ701U	223	838	11.52	645/56	3000	2600	4500	11	10.0	4.0	1.5	31	44
260	134	161	19	2.6	K402_0115 EZ702U	458	838	11.52	645/56	3000	2600	4500	16	10.0	4.0	1.5	31	47
260	151	179	21	2.3	K402_0115 EZ505U	600	838	11.52	645/56	3000	2600	4500	15	10.0	4.0	1.5	31	47
260	184	232	26	1.9	K402_0115 EZ703U	600	838	11.52	645/56	3000	2600	4500	24	10.0	4.0	1.5	31	49
260	238	337	33	1.5	K402_0115 EZ705U	600	1100	11.52	645/56	3000	2600	4500	37	10.0	4.0	1.5	31	54
297	72	81	12	4.6	K402_0100 EZ701U	196	735	10.10	1333/132	3400	3000	5000	11	10.0	4.0	1.5	31	44
297	118	141	19	2.8	K402_0100 EZ702U	402	735	10.10	1333/132	3400	3000	5000	16	10.0	4.0	1.5	31	47
297	132	157	21	2.5	K402_0100 EZ505U	588	735	10.10	1333/132	3400	3000	5000	14	10.0	4.0	1.5	31	47
297	162	204	26	2.0	K402_0100 EZ703U	588	735	10.10	1333/132	3400	3000	5000	24	10.0	4.0	1.5	31	49
297	209	296	33	1.6	K402_0100 EZ705U	600	1100	10.10	1333/132	3400	3000	5000	36	10.0	4.0	1.5	31	54
325	66	74	12	4.8	K402_0092 EZ701U	179	672	9.238	2365/256	3000	2600	4500	12	10.0	4.0	1.5	31	44
325	108	129	19	3.0	K402_0092 EZ702U	367	672	9.238	2365/256	3000	2600	4500	17	10.0	4.0	1.5	31	47
325	121	143	21	2.7	K402_0092 EZ505U	538	672	9.238	2365/256	3000	2600	4500	16	10.0	4.0	1.5	31	47
325	148	186	26	2.2	K402_0092 EZ703U	538	672	9.238	2365/256	3000	2600	4500	25	10.0	4.0	1.5	31	49
325	191	271	34	1.7	K402_0092 EZ705U	600	1100	9.238	2365/256	3000	2600	4500	38	10.0	4.0	1.5	31	54
358	98	117	19	3.2	K402_0084 EZ702U	333	610	8.377	645/77	3000	2600	4500	17	10.0	4.0	1.5	31	47
358	110	130	22	2.8	K402_0084 EZ505U	488	610	8.377	645/77	3000	2600	4500	15	10.0	4.0	1.5	31	47
358	134	169	26	2.3	K402_0084 EZ703U	488	610	8.377	645/77	3000	2600	4500	25	10.0	4.0	1.5	31	49
358	173	245	34	1.8	K402_0084 EZ705U	587	1100	8.377	645/77	3000	2600	4500	37	10.0	4.0	1.5	31	54
402	154	218	34	1.9	K402_0075 EZ705U	564	1100	7.456	1849/248	2600	2200	3800	39	10.0	4.0	1.5	31	54
446	78	94	19	3.7	K402_0067 EZ702U	267	489	6.719	215/32	3000	2600	4500	18	10.0	4.0	1.5	31	47
446	88	104	22	3.3	K402_0067 EZ505U	391	489	6.719	215/32	3000	2600	4500	16	10.0	4.0	1.5	31	47
446	108	136	27	2.7	K402_0067 EZ703U	391	489	6.719	215/32	3000	2600	4500	26	10.0	4.0	1.5	31	49
446	139	197	35	2.1	K402_0067 EZ705U	545	1100	6.719	215/32	3000	2600	4500	38	10.0	4.0	1.5	31	54
500	124	176	35	2.2	K402_0060 EZ705U	525	1100	6.000	6/1	2600	2200	3800	41	10.0	4.0	1.5	31	54
553	112	159	35	2.4	K402_0054 EZ705U	508	1052	5.422	1849/341	2600	2200	3800	40	10.0	4.0	1.5	31	54
687	90	128	36	2.8	K402_0044 EZ705U	440	847	4.364	48/11	2600	2200	3800	42	10.0	4.0	1.5	31	54
750	83	117	36	2.9	K402_0040 EZ705U	404	776	4.000	4/1	2600	2200	3800	44	10.0	4.0	1.5	31	54
K4 (n_{1N} = 4000 min^{-1}, $M_{2acc,max}$ = 600 Nm)																		
316	309	537	43	1.0	K402_0125 EZ813U	600	1100	12.66	2924/231	3400	3000	5000	106	10.0	4.0	1.5	31	71
316	321	824	44	1.0	K402_0125 EZ815U	600	1100	12.66	2924/231	3400	3000	5000	169	10.0	4.0	1.5	31	84

n_{2N} [rpm]	M_{2N} [Nm]	$M_{2,0}$ [Nm]	a_{th}	S	Type	M_{2acc} [Nm]	M_{2NOT} [Nm]	i	i_{exakt}	n_{1maxDB} EL1,2 [rpm]	n_{1maxDB} EL3,4,5,6 [rpm]	n_{1maxZB} [rpm]	J_1 [kgcm²]	$\Delta\varphi_2$ [arcmin]	$\Delta\varphi_{2redII}$ [arcmin]	$\Delta\varphi_{2redI}$ [arcmin]	C_2 [Nm/arcmin]	m [kg]
K4 (n_{1N} = 4000 min^{-1}, $M_{2acc,max}$ = 600 Nm)																		
347	282	488	43	1.1	K402_0115 EZ813U	600	1100	11.52	645/56	3000	2600	4500	107	10.0	4.0	1.5	31	71
347	292	750	45	1.1	K402_0115 EZ815U	600	1100	11.52	645/56	3000	2600	4500	170	10.0	4.0	1.5	31	84
396	247	428	44	1.2	K402_0100 EZ813U	600	1100	10.10	1333/132	3400	3000	5000	107	10.0	4.0	1.5	31	71
396	256	658	45	1.2	K402_0100 EZ815U	600	1100	10.10	1333/132	3400	3000	5000	170	10.0	4.0	1.5	31	84
433	226	392	44	1.3	K402_0092 EZ813U	600	1100	9.238	2365/256	3000	2600	4500	108	10.0	4.0	1.5	31	71
433	234	602	45	1.2	K402_0092 EZ815U	600	1100	9.238	2365/256	3000	2600	4500	171	10.0	4.0	1.5	31	84
477	205	355	44	1.4	K402_0084 EZ813U	587	1100	8.377	645/77	3000	2600	4500	107	10.0	4.0	1.5	31	71
477	212	546	46	1.3	K402_0084 EZ815U	587	1100	8.377	645/77	3000	2600	4500	170	10.0	4.0	1.5	31	84
595	164	285	45	1.6	K402_0067 EZ813U	545	1100	6.719	215/32	3000	2600	4500	109	10.0	4.0	1.5	31	71
595	170	438	47	1.5	K402_0067 EZ815U	545	1100	6.719	215/32	3000	2600	4500	172	10.0	4.0	1.5	31	84
K4 (n_{1N} = 4500 min^{-1}, $M_{2acc,max}$ = 600 Nm)																		
129	320	516	15	1.4	K402_0350 EZ505U	600	1100	34.76	4171/120	3600	3300	5500	13	10.0	4.0	1.5	31	47
129	408	674	20	1.1	K402_0350 EZ703U	600	1100	34.76	4171/120	3600	3300	5500	22	10.0	4.0	1.5	31	49
162	256	412	16	1.6	K402_0280 EZ505U	600	1100	27.77	1333/48	3600	3300	5500	13	10.0	4.0	1.5	31	47
162	326	539	20	1.2	K402_0280 EZ703U	600	1100	27.77	1333/48	3600	3300	5500	22	10.0	4.0	1.5	31	49
178	233	375	16	1.7	K402_0250 EZ505U	600	1001	25.28	4171/165	3600	3300	5500	13	10.0	4.0	1.5	31	47
178	297	490	20	1.3	K402_0250 EZ703U	600	1001	25.28	4171/165	3600	3300	5500	22	10.0	4.0	1.5	31	49
193	215	346	16	1.8	K402_0230 EZ505U	600	1100	23.29	559/24	3600	3300	5500	13	10.0	4.0	1.5	31	47
193	273	452	20	1.4	K402_0230 EZ703U	600	1100	23.29	559/24	3600	3300	5500	22	10.0	4.0	1.5	31	49
193	371	678	27	1.0	K402_0230 EZ705U	600	1100	23.29	559/24	3600	3300	5500	35	10.0	4.0	1.5	31	54
223	186	300	16	2.0	K402_0200 EZ505U	600	1100	20.20	1333/66	3600	3300	5500	13	10.0	4.0	1.5	31	47
223	237	392	21	1.5	K402_0200 EZ703U	600	1100	20.20	1333/66	3600	3300	5500	22	10.0	4.0	1.5	31	49
259	160	258	16	2.2	K402_0175 EZ505U	600	1100	17.41	731/42	3400	3000	5000	14	10.0	4.0	1.5	31	47
259	204	338	21	1.7	K402_0175 EZ703U	600	1100	17.41	731/42	3400	3000	5000	23	10.0	4.0	1.5	31	49
259	277	506	28	1.3	K402_0175 EZ705U	600	1100	17.41	731/42	3400	3000	5000	35	10.0	4.0	1.5	31	54
266	156	251	16	2.2	K402_0170 EZ505U	600	1013	16.94	559/33	3600	3300	5500	13	10.0	4.0	1.5	31	47
266	199	329	21	1.7	K402_0170 EZ703U	600	1013	16.94	559/33	3600	3300	5500	23	10.0	4.0	1.5	31	49
266	269	493	28	1.3	K402_0170 EZ705U	600	1100	16.94	559/33	3600	3300	5500	35	10.0	4.0	1.5	31	54
324	128	206	17	2.5	K402_0140 EZ505U	600	1010	13.89	1333/96	3400	3000	5000	14	10.0	4.0	1.5	31	47
324	163	269	21	2.0	K402_0140 EZ703U	600	1010	13.89	1333/96	3400	3000	5000	24	10.0	4.0	1.5	31	49
324	221	404	29	1.5	K402_0140 EZ705U	600	1100	13.89	1333/96	3400	3000	5000	36	10.0	4.0	1.5	31	54
356	117	188	17	2.7	K402_0125 EZ505U	600	869	12.66	2924/231	3400	3000	5000	14	10.0	4.0	1.5	31	47
356	149	246	21	2.1	K402_0125 EZ703U	600	869	12.66	2924/231	3400	3000	5000	23	10.0	4.0	1.5	31	49
356	201	368	29	1.5	K402_0125 EZ705U	600	1100	12.66	2924/231	3400	3000	5000	36	10.0	4.0	1.5	31	54
391	106	171	17	2.8	K402_0115 EZ505U	600	838	11.52	645/56	3000	2600	4500	15	10.0	4.0	1.5	31	47
391	135	223	22	2.2	K402_0115 EZ703U	600	838	11.52	645/56	3000	2600	4500	24	10.0	4.0	1.5	31	49
391	183	335	29	1.6	K402_0115 EZ705U	600	1100	11.52	645/56	3000	2600	4500	37	10.0	4.0	1.5	31	54
446	93	150	17	3.1	K402_0100 EZ505U	588	735	10.10	1333/132	3400	3000	5000	14	10.0	4.0	1.5	31	47
446	119	196	22	2.4	K402_0100 EZ703U	588	735	10.10	1333/132	3400	3000	5000	24	10.0	4.0	1.5	31	49
446	161	294	29	1.8	K402_0100 EZ705U	600	1100	10.10	1333/132	3400	3000	5000	36	10.0	4.0	1.5	31	54
487	85	137	17	3.3	K402_0092 EZ505U	538	672	9.238	2365/256	3000	2600	4500	16	10.0	4.0	1.5	31	47
487	108	179	22	2.6	K402_0092 EZ703U	538	672	9.238	2365/256	3000	2600	4500	25	10.0	4.0	1.5	31	49
487	147	269	30	1.9	K402_0092 EZ705U	600	1100	9.238	2365/256	3000	2600	4500	38	10.0	4.0	1.5	31	54
537	77	124	17	3.5	K402_0084 EZ505U	488	610	8.377	645/77	3000	2600	4500	15	10.0	4.0	1.5	31	47
537	98	163	22	2.8	K402_0084 EZ703U	488	610	8.377	645/77	3000	2600	4500	25	10.0	4.0	1.5	31	49
537	133	244	30	2.0	K402_0084 EZ705U	587	1100	8.377	645/77	3000	2600	4500	37	10.0	4.0	1.5	31	54
670	62	100	18	4.1	K402_0067 EZ505U	391	489	6.719	215/32	3000	2600	4500	16	10.0	4.0	1.5	31	47
670	79	130	23	3.2	K402_0067 EZ703U	391	489	6.719	215/32	3000	2600	4500	26	10.0	4.0	1.5	31	49
670	107	196	30	2.4	K402_0067 EZ705U	545	1100	6.719	215/32	3000	2600	4500	38	10.0	4.0	1.5	31	54
K5 (n_{1N} = 2000 min^{-1}, $M_{2acc,max}$ = 1000 Nm)																		
91	820	919	42	1.1	K513_0220 EZ813U	1000	1800	21.99	2639/120	2800	2500	4200	108	10.0	5.0	2.0	50	77
103	721	809	42	1.2	K513_0195 EZ813U	1000	1800	19.35	27869/1440	2800	2500	4200	108	10.0	5.0	2.0	50	77
114	652	731	42	1.3	K513_0175 EZ813U	1000	1800	17.48	6293/360	2800	2500	4200	109	10.0	5.0	2.0	50	77
124	600	673	42	1.4	K513_0160 EZ813U	1000	1800	16.09	26071/1620	2300	2200	3600	110	10.0	5.0	2.0	50	77
138	542	608	42	1.5	K513_0145 EZ813U	1000	1800	14.54	5887/405	2300	2200	3600	110	10.0	5.0	2.0	50	77
156	477	535	42	1.6	K513_0130 EZ813U	1000	1800	12.81	1537/120	2300	2200	3600	112	10.0	5.0	2.0	50	77
156	707	842	62	1.1	K513_0130 EZ815U	1000	1800	12.81	1537/120	2300	2200	3600	175	10.0	5.0	2.0	50	90
173	431	484	42	1.7	K513_0115 EZ813U	1000	1800	11.57	10759/930	2300	2200	3600	112	10.0	5.0	2.0	50	77
173	639	760	63	1.1	K513_0115 EZ815U	1000	1800	11.57	10759/930	2300	2200	3600	175	10.0	5.0	2.0	50	90
197	378	424	43	1.9	K513_0100 EZ813U	1000	1800	10.15	203/20	1900	1800	3200	115	10.0	5.0	2.0	50	77
197	560	667	63	1.3	K513_0100 EZ815U	1000	1800	10.15	203/20	1900	1800	3200	178	10.0	5.0	2.0	50	90
218	342	383	43	2.0	K513_0092 EZ813U	1000	1753	9.168	1421/155	1900	1800	3200	116	10.0	5.0	2.0	50	77
218	506	603	63	1.3	K513_0092 EZ815U	1000	1753	9.168	1421/155	1900	1800	3200	179	10.0	5.0	2.0	50	90
246	303	340	43	2.2	K513_0081 EZ813U	1000	1555	8.134	17081/2100	1900	1800	3200	119	10.0	5.0	2.0	50	77

n_{2N} [rpm]	M_{2N} [Nm]	$M_{2,0}$ [Nm]	a_{th}	S	Type	M_{2acc} [Nm]	M_{2NOT} [Nm]	i	i_{exakt}	n_{1maxDB} EL1,2 [rpm]	n_{1maxDB} EL3,4,5,6 [rpm]	n_{1maxZB} [rpm]	J_1 [kgcm²]	$\Delta\varphi_2$ [arcmin]	$\Delta\varphi_{2redII}$ [arcmin]	$\Delta\varphi_{2redI}$ [arcmin]	C_2 [Nm/arcmin]	m [kg]
K5 (n_{1N} = 2000 min^{-1}, $M_{2acc,max}$ = 1000 Nm)																		
246	449	535	63	1.5	K513_0081 EZ815U	1000	1555	8.134	17081/2100	1900	1800	3200	182	10.0	5.0	2.0	50	90
272	274	307	43	2.3	K513_0073 EZ813U	983	1405	7.347	551/75	1900	1800	3200	120	10.0	5.0	2.0	50	77
272	406	483	64	1.6	K513_0073 EZ815U	1000	1405	7.347	551/75	1900	1800	3200	183	10.0	5.0	2.0	50	90
K5 (n_{1N} = 3000 min^{-1}, $M_{2acc,max}$ = 1000 Nm)																		
16	754	824	8.6	1.2	K514_1860 EZ501U	1000	1800	186.2	26071/140	3400	3000	5000	3.1	10.0	6.0	3.0	50	51
18	681	744	8.4	1.3	K514_1680 EZ501U	1000	1800	168.2	841/5	3400	3000	5000	3.1	10.0	6.0	3.0	50	51
20	603	659	8.1	1.5	K514_1490 EZ501U	1000	1800	149.0	26071/175	3400	3000	5000	3.2	10.0	6.0	3.0	50	51
22	544	595	7.8	1.7	K514_1350 EZ501U	1000	1781	134.6	3364/25	3400	3000	5000	3.2	10.0	6.0	3.0	50	51
24	505	553	7.7	1.8	K514_1250 EZ501U	1000	1800	124.9	599633/4800	3400	3000	5000	3.2	10.0	6.0	3.0	50	51
24	870	940	13	1.0	K514_1250 EZ502U	1000	1800	124.9	599633/4800	3400	3000	5000	5.5	10.0	6.0	3.0	50	53
27	457	499	7.4	2.0	K514_1130 EZ501U	1000	1656	112.8	135401/1200	3400	3000	5000	3.2	10.0	6.0	3.0	50	51
27	786	849	13	1.1	K514_1130 EZ502U	1000	1656	112.8	135401/1200	3400	3000	5000	5.5	10.0	6.0	3.0	50	53
31	397	434	8.5	1.9	K513_0970 EZ501U	916	1392	96.64	38657/400	3400	3000	5000	3.2	10.0	5.0	2.0	50	47
31	684	739	15	1.1	K513_0970 EZ502U	916	1392	96.64	38657/400	3400	3000	5000	5.5	10.0	5.0	2.0	50	48
31	684	767	15	1.1	K513_0970 EZ701U	916	1392	96.64	38657/400	3400	3000	5000	8.8	10.0	5.0	2.0	50	50
32	381	416	7.0	2.4	K514_0940 EZ501U	1000	1622	94.15	338923/3600	3400	3000	5000	3.3	10.0	6.0	3.0	50	51
32	656	709	12	1.4	K514_0940 EZ502U	1000	1622	94.15	338923/3600	3400	3000	5000	5.6	10.0	6.0	3.0	50	53
32	859	983	16	1.0	K514_0940 EZ503U	1000	1622	94.15	338923/3600	3400	3000	5000	7.9	10.0	6.0	3.0	50	54
34	359	392	9.1	1.9	K513_0870 EZ501U	827	1258	87.29	8729/100	3400	3000	5000	3.2	10.0	5.0	2.0	50	47
34	618	668	16	1.1	K513_0870 EZ502U	827	1258	87.29	8729/100	3400	3000	5000	5.5	10.0	5.0	2.0	50	48
34	618	693	16	1.1	K513_0870 EZ701U	827	1258	87.29	8729/100	3400	3000	5000	8.8	10.0	5.0	2.0	50	50
35	344	376	6.8	2.6	K514_0850 EZ501U	1000	1465	85.03	76531/900	3400	3000	5000	3.3	10.0	6.0	3.0	50	51
35	592	640	12	1.5	K514_0850 EZ502U	1000	1465	85.03	76531/900	3400	3000	5000	5.6	10.0	6.0	3.0	50	53
35	776	888	15	1.2	K514_0850 EZ503U	1000	1465	85.03	76531/900	3400	3000	5000	8.0	10.0	6.0	3.0	50	54
39	319	349	6.7	2.8	K513_0780 EZ501U	1000	1396	77.59	26071/336	3400	3000	5000	3.3	10.0	5.0	2.0	50	47
39	549	593	12	1.6	K513_0780 EZ502U	1000	1396	77.59	26071/336	3400	3000	5000	5.6	10.0	5.0	2.0	50	48
39	549	616	12	1.6	K513_0780 EZ701U	1000	1396	77.59	26071/336	3400	3000	5000	8.9	10.0	5.0	2.0	50	50
39	720	823	15	1.3	K513_0780 EZ503U	1000	1396	77.59	26071/336	3400	3000	5000	8.0	10.0	5.0	2.0	50	50
43	288	315	7.2	2.8	K513_0700 EZ501U	985	1261	70.08	841/12	3400	3000	5000	3.4	10.0	5.0	2.0	50	47
43	496	536	12	1.7	K513_0700 EZ502U	985	1261	70.08	841/12	3400	3000	5000	5.7	10.0	5.0	2.0	50	48
43	496	556	12	1.7	K513_0700 EZ701U	985	1261	70.08	841/12	3400	3000	5000	9.0	10.0	5.0	2.0	50	50
43	650	744	16	1.3	K513_0700 EZ503U	985	1261	70.08	841/12	3400	3000	5000	8.0	10.0	5.0	2.0	50	50
46	265	290	6.4	3.4	K513_0650 EZ501U	987	1272	64.54	12586/195	3400	3000	5000	3.5	10.0	5.0	2.0	50	47
46	457	494	11	2.0	K513_0650 EZ502U	1000	1272	64.54	12586/195	3400	3000	5000	5.8	10.0	5.0	2.0	50	48
46	457	512	11	2.0	K513_0650 EZ701U	1000	1800	64.54	12586/195	3400	3000	5000	9.1	10.0	5.0	2.0	50	50
46	599	685	14	1.5	K513_0650 EZ503U	1000	1272	64.54	12586/195	3400	3000	5000	8.2	10.0	5.0	2.0	50	50
46	740	889	18	1.2	K513_0650 EZ702U	1000	1800	64.54	12586/195	3400	3000	5000	14	10.0	5.0	2.0	50	52
46	833	987	20	1.1	K513_0650 EZ505U	1000	1800	64.54	12586/195	3400	3000	5000	13	10.0	5.0	2.0	50	52
51	240	262	6.2	3.8	K513_0580 EZ501U	892	1149	58.30	11368/195	3400	3000	5000	3.5	10.0	5.0	2.0	50	47
51	412	446	11	2.2	K513_0580 EZ502U	919	1149	58.30	11368/195	3400	3000	5000	5.8	10.0	5.0	2.0	50	48
51	412	463	11	2.2	K513_0580 EZ701U	1000	1800	58.30	11368/195	3400	3000	5000	9.1	10.0	5.0	2.0	50	50
51	541	619	14	1.7	K513_0580 EZ503U	919	1149	58.30	11368/195	3400	3000	5000	8.2	10.0	5.0	2.0	50	50
51	669	803	17	1.3	K513_0580 EZ702U	1000	1800	58.30	11368/195	3400	3000	5000	14	10.0	5.0	2.0	50	52
51	752	892	19	1.2	K513_0580 EZ505U	1000	1800	58.30	11368/195	3400	3000	5000	13	10.0	5.0	2.0	50	52
62	198	216	6.1	4.4	K513_0480 EZ501U	737	1082	48.16	2697/56	3400	3000	5000	3.9	10.0	5.0	2.0	50	47
62	341	368	10	2.5	K513_0480 EZ502U	866	1082	48.16	2697/56	3400	3000	5000	6.2	10.0	5.0	2.0	50	48
62	341	382	10	2.6	K513_0480 EZ701U	921	1800	48.16	2697/56	3400	3000	5000	9.5	10.0	5.0	2.0	50	50
62	447	511	14	1.9	K513_0480 EZ503U	866	1082	48.16	2697/56	3400	3000	5000	8.6	10.0	5.0	2.0	50	50
62	553	663	16	1.6	K513_0480 EZ702U	1000	1800	48.16	2697/56	3400	3000	5000	15	10.0	5.0	2.0	50	52
62	622	737	18	1.4	K513_0480 EZ505U	1000	1800	48.16	2697/56	3400	3000	5000	13	10.0	5.0	2.0	50	52
62	760	958	22	1.2	K513_0480 EZ703U	1000	1800	48.16	2697/56	3400	3000	5000	23	10.0	5.0	2.0	50	54
69	179	195	6.5	4.4	K513_0440 EZ501U	665	977	43.50	87/2	3400	3000	5000	3.9	10.0	5.0	2.0	50	47
69	308	333	11	2.5	K513_0440 EZ502U	782	977	43.50	87/2	3400	3000	5000	6.2	10.0	5.0	2.0	50	48
69	308	345	9.8	2.9	K513_0440 EZ701U	832	1800	43.50	87/2	3400	3000	5000	9.5	10.0	5.0	2.0	50	50
69	403	462	15	1.9	K513_0440 EZ503U	782	977	43.50	87/2	3400	3000	5000	8.6	10.0	5.0	2.0	50	50
69	499	599	16	1.8	K513_0440 EZ702U	1000	1800	43.50	87/2	3400	3000	5000	15	10.0	5.0	2.0	50	52
69	561	665	18	1.6	K513_0440 EZ505U	1000	1800	43.50	87/2	3400	3000	5000	13	10.0	5.0	2.0	50	52
69	686	865	22	1.3	K513_0440 EZ703U	1000	1800	43.50	87/2	3400	3000	5000	23	10.0	5.0	2.0	50	54
78	273	306	9.4	3.3	K513_0390 EZ701U	737	1800	38.53	2697/70	3400	3000	5000	9.9	10.0	5.0	2.0	50	50
78	442	530	15	2.0	K513_0390 EZ702U	1000	1800	38.53	2697/70	3400	3000	5000	15	10.0	5.0	2.0	50	52
78	497	589	17	1.8	K513_0390 EZ505U	1000	1800	38.53	2697/70	3400	3000	5000	14	10.0	5.0	2.0	50	52
78	608	766	21	1.5	K513_0390 EZ703U	1000	1800	38.53	2697/70	3400	3000	5000	23	10.0	5.0	2.0	50	54
86	246	276	9.1	3.7	K513_0350 EZ701U	665	1781	34.80	174/5	3400	3000	5000	10	10.0	5.0	2.0	50	50
86	399	479	15	2.3	K513_0350 EZ702U	1000	1781	34.80	174/5	3400	3000	5000	15	10.0	5.0	2.0	50	52

n_{2N}	M_{2N}	$M_{2,0}$	a_{th}	S	Type	M_{2acc}	M_{2NOT}	i	i_{exakt}	n_{1maxDB}		n_{1maxZB}	J_1	$\Delta\varphi_2$	$\Delta\varphi_{2redII}$	$\Delta\varphi_{2redI}$	C_2	m
										EL1,2	EL3,4,5,6							
[rpm]	[Nm]	[Nm]				[Nm]	[Nm]			[rpm]	[rpm]	[rpm]	[kgcm²]	[arcmin]	[arcmin]	[arcmin]	[Nm/ arcmin]	[kg]
K5 (n_{1N} = 3000 min^{-1}, $M_{2acc,max}$ = 1000 Nm)																		
86	449	532	17	2.0	K513_0350 EZ505U	1000	1781	34.80	174/5	3400	3000	5000	14	10.0	5.0	2.0	50	52
86	549	692	20	1.6	K513_0350 EZ703U	1000	1781	34.80	174/5	3400	3000	5000	23	10.0	5.0	2.0	50	54
93	229	256	8.9	3.9	K513_0320 EZ701U	618	1800	32.31	20677/640	3400	3000	5000	10	10.0	5.0	2.0	50	50
93	371	445	14	2.4	K513_0320 EZ702U	1000	1800	32.31	20677/640	3400	3000	5000	16	10.0	5.0	2.0	50	52
93	417	494	16	2.2	K513_0320 EZ505U	1000	1800	32.31	20677/640	3400	3000	5000	14	10.0	5.0	2.0	50	52
93	510	642	20	1.8	K513_0320 EZ703U	1000	1800	32.31	20677/640	3400	3000	5000	24	10.0	5.0	2.0	50	54
93	658	933	26	1.4	K513_0320 EZ705U	1000	1800	32.31	20677/640	3400	3000	5000	36	10.0	5.0	2.0	50	60
103	206	232	8.9	4.2	K513_0290 EZ701U	558	1656	29.18	4669/160	3400	3000	5000	11	10.0	5.0	2.0	50	50
103	335	402	14	2.6	K513_0290 EZ702U	1000	1656	29.18	4669/160	3400	3000	5000	16	10.0	5.0	2.0	50	52
103	377	446	16	2.3	K513_0290 EZ505U	1000	1656	29.18	4669/160	3400	3000	5000	14	10.0	5.0	2.0	50	52
103	460	580	20	1.9	K513_0290 EZ703U	1000	1656	29.18	4669/160	3400	3000	5000	24	10.0	5.0	2.0	50	54
103	594	842	26	1.5	K513_0290 EZ705U	1000	1800	29.18	4669/160	3400	3000	5000	36	10.0	5.0	2.0	50	60
123	172	193	9.0	4.8	K513_0240 EZ701U	466	1622	24.35	11687/480	2800	2500	4200	11	10.0	5.0	2.0	50	50
123	279	335	15	2.9	K513_0240 EZ702U	954	1622	24.35	11687/480	2800	2500	4200	17	10.0	5.0	2.0	50	52
123	314	372	16	2.6	K513_0240 EZ505U	1000	1622	24.35	11687/480	2800	2500	4200	15	10.0	5.0	2.0	50	52
123	384	484	20	2.1	K513_0240 EZ703U	1000	1622	24.35	11687/480	2800	2500	4200	25	10.0	5.0	2.0	50	54
123	496	703	26	1.7	K513_0240 EZ705U	1000	1800	24.35	11687/480	2800	2500	4200	37	10.0	5.0	2.0	50	60
136	252	303	15	3.1	K513_0220 EZ702U	862	1465	21.99	2639/120	2800	2500	4200	17	10.0	5.0	2.0	50	52
136	284	336	16	2.8	K513_0220 EZ505U	1000	1465	21.99	2639/120	2800	2500	4200	15	10.0	5.0	2.0	50	52
136	347	437	20	2.3	K513_0220 EZ703U	1000	1465	21.99	2639/120	2800	2500	4200	25	10.0	5.0	2.0	50	54
136	448	635	26	1.8	K513_0220 EZ705U	1000	1800	21.99	2639/120	2800	2500	4200	37	10.0	5.0	2.0	50	60
155	222	266	15	3.4	K513_0195 EZ702U	759	1387	19.35	27869/1440	2800	2500	4200	18	10.0	5.0	2.0	50	52
155	250	296	16	3.0	K513_0195 EZ505U	1000	1387	19.35	27869/1440	2800	2500	4200	16	10.0	5.0	2.0	50	52
155	305	385	20	2.5	K513_0195 EZ703U	1000	1387	19.35	27869/1440	2800	2500	4200	26	10.0	5.0	2.0	50	54
155	394	559	26	1.9	K513_0195 EZ705U	1000	1800	19.35	27869/1440	2800	2500	4200	38	10.0	5.0	2.0	50	60
172	201	241	15	3.7	K513_0175 EZ702U	685	1253	17.48	6293/360	2800	2500	4200	18	10.0	5.0	2.0	50	52
172	226	267	17	3.3	K513_0175 EZ505U	1000	1253	17.48	6293/360	2800	2500	4200	16	10.0	5.0	2.0	50	52
172	276	348	20	2.7	K513_0175 EZ703U	1000	1253	17.48	6293/360	2800	2500	4200	26	10.0	5.0	2.0	50	54
172	356	505	26	2.1	K513_0175 EZ705U	1000	1800	17.48	6293/360	2800	2500	4200	38	10.0	5.0	2.0	50	60
186	185	222	15	3.9	K513_0160 EZ702U	631	1153	16.09	26071/1620	2300	2200	3600	19	10.0	5.0	2.0	50	52
186	208	246	17	3.4	K513_0160 EZ505U	923	1153	16.09	26071/1620	2300	2200	3600	17	10.0	5.0	2.0	50	52
186	254	320	20	2.8	K513_0160 EZ703U	923	1153	16.09	26071/1620	2300	2200	3600	27	10.0	5.0	2.0	50	54
186	328	465	26	2.2	K513_0160 EZ705U	1000	1800	16.09	26071/1620	2300	2200	3600	39	10.0	5.0	2.0	50	60
206	167	200	15	4.1	K513_0145 EZ702U	570	1042	14.54	5887/405	2300	2200	3600	19	10.0	5.0	2.0	50	52
206	188	222	17	3.7	K513_0145 EZ505U	833	1042	14.54	5887/405	2300	2200	3600	18	10.0	5.0	2.0	50	52
206	229	289	20	3.0	K513_0145 EZ703U	833	1042	14.54	5887/405	2300	2200	3600	27	10.0	5.0	2.0	50	54
206	296	420	26	2.3	K513_0145 EZ705U	1000	1800	14.54	5887/405	2300	2200	3600	40	10.0	5.0	2.0	50	60
234	261	370	26	2.5	K513_0130 EZ705U	1000	1800	12.81	1537/120	2300	2200	3600	41	10.0	5.0	2.0	50	60
259	236	334	26	2.7	K513_0115 EZ705U	1000	1800	11.57	10759/930	2300	2200	3600	42	10.0	5.0	2.0	50	60
296	207	293	27	3.0	K513_0100 EZ705U	1000	1800	10.15	203/20	1900	1800	3200	44	10.0	5.0	2.0	50	60
327	187	265	27	3.2	K513_0092 EZ705U	912	1753	9.168	1421/155	1900	1800	3200	45	10.0	5.0	2.0	50	60
369	166	235	27	3.4	K513_0081 EZ705U	809	1555	8.134	17081/2100	1900	1800	3200	48	10.0	5.0	2.0	50	60
408	150	212	27	3.7	K513_0073 EZ705U	730	1405	7.347	551/75	1900	1800	3200	50	10.0	5.0	2.0	50	60
K5 (n_{1N} = 4000 min^{-1}, $M_{2acc,max}$ = 1000 Nm)																		
124	778	1350	33	1.1	K513_0320 EZ813U	1000	1800	32.31	20677/640	3400	3000	5000	106	10.0	5.0	2.0	50	77
124	806	2074	35	1.0	K513_0320 EZ815U	1000	1800	32.31	20677/640	3400	3000	5000	169	10.0	5.0	2.0	50	90
137	703	1219	33	1.1	K513_0290 EZ813U	1000	1800	29.18	4669/160	3400	3000	5000	106	10.0	5.0	2.0	50	77
137	728	1873	35	1.1	K513_0290 EZ815U	1000	1800	29.18	4669/160	3400	3000	5000	169	10.0	5.0	2.0	50	90
164	587	1017	34	1.3	K513_0240 EZ813U	1000	1800	24.35	11687/480	2800	2500	4200	107	10.0	5.0	2.0	50	77
164	608	1563	35	1.2	K513_0240 EZ815U	1000	1800	24.35	11687/480	2800	2500	4200	170	10.0	5.0	2.0	50	90
182	530	919	34	1.4	K513_0220 EZ813U	1000	1800	21.99	2639/120	2800	2500	4200	108	10.0	5.0	2.0	50	77
182	549	1412	35	1.3	K513_0220 EZ815U	1000	1800	21.99	2639/120	2800	2500	4200	171	10.0	5.0	2.0	50	90
207	466	809	34	1.5	K513_0195 EZ813U	1000	1800	19.35	27869/1440	2800	2500	4200	108	10.0	5.0	2.0	50	77
207	483	1242	35	1.4	K513_0195 EZ815U	1000	1800	19.35	27869/1440	2800	2500	4200	172	10.0	5.0	2.0	50	90
229	421	730	34	1.6	K513_0175 EZ813U	1000	1800	17.48	6293/360	2800	2500	4200	109	10.0	5.0	2.0	50	77
229	436	1122	35	1.5	K513_0175 EZ815U	1000	1800	17.48	6293/360	2800	2500	4200	172	10.0	5.0	2.0	50	90
K5 (n_{1N} = 4500 min^{-1}, $M_{2acc,max}$ = 1000 Nm)																		
70	586	944	14	1.5	K513_0650 EZ505U	1000	1800	64.54	12586/195	3400	3000	5000	13	10.0	5.0	2.0	50	52
70	747	1234	18	1.2	K513_0650 EZ703U	1000	1800	64.54	12586/195	3400	3000	5000	22	10.0	5.0	2.0	50	54
77	529	853	14	1.7	K513_0580 EZ505U	1000	1800	58.30	11368/195	3400	3000	5000	13	10.0	5.0	2.0	50	52
77	674	1115	17	1.3	K513_0580 EZ703U	1000	1800	58.30	11368/195	3400	3000	5000	22	10.0	5.0	2.0	50	54
93	437	704	13	2.1	K513_0480 EZ505U	1000	1800	48.16	2697/56	3400	3000	5000	13	10.0	5.0	2.0	50	52
93	557	921	16	1.6	K513_0480 EZ703U	1000	1800	48.16	2697/56	3400	3000	5000	23	10.0	5.0	2.0	50	54
103	395	636	13	2.2	K513_0440 EZ505U	1000	1800	43.50	87/2	3400	3000	5000	13	10.0	5.0	2.0	50	52

n_{2N} [rpm]	M_{2N} [Nm]	$M_{2,0}$ [Nm]	a_{th}	S	Type	M_{2acc} [Nm]	M_{2NOT} [Nm]	i	i_{exakt}	n_{1maxDB} EL1,2 [rpm]	n_{1maxDB} EL3,4,5,6 [rpm]	n_{1maxZB} [rpm]	J_1 [kgcm²]	$\Delta\varphi_2$ [arcmin]	$\Delta\varphi_{2redII}$ [arcmin]	$\Delta\varphi_{2redI}$ [arcmin]	C_2 [Nm/arcmin]	m [kg]
K5 (n_{1N} = 4500 min^{-1}, $M_{2acc,max}$ = 1000 Nm)																		
103	503	832	16	1.7	K513_0440 EZ703U	1000	1800	43.50	87/2	3400	3000	5000	23	10.0	5.0	2.0	50	54
117	350	564	13	2.4	K513_0390 EZ505U	1000	1800	38.53	2697/70	3400	3000	5000	14	10.0	5.0	2.0	50	52
117	446	737	17	1.9	K513_0390 EZ703U	1000	1800	38.53	2697/70	3400	3000	5000	23	10.0	5.0	2.0	50	54
129	316	509	13	2.6	K513_0350 EZ505U	1000	1781	34.80	174/5	3400	3000	5000	14	10.0	5.0	2.0	50	52
129	403	665	17	2.0	K513_0350 EZ703U	1000	1781	34.80	174/5	3400	3000	5000	23	10.0	5.0	2.0	50	54
139	293	473	13	2.7	K513_0320 EZ505U	1000	1800	32.31	20677/640	3400	3000	5000	14	10.0	5.0	2.0	50	52
139	374	618	17	2.1	K513_0320 EZ703U	1000	1800	32.31	20677/640	3400	3000	5000	24	10.0	5.0	2.0	50	54
139	507	927	23	1.6	K513_0320 EZ705U	1000	1800	32.31	20677/640	3400	3000	5000	36	10.0	5.0	2.0	50	60
154	265	427	13	2.9	K513_0290 EZ505U	1000	1656	29.18	4669/160	3400	3000	5000	14	10.0	5.0	2.0	50	52
154	338	558	17	2.3	K513_0290 EZ703U	1000	1656	29.18	4669/160	3400	3000	5000	24	10.0	5.0	2.0	50	54
154	458	837	23	1.7	K513_0290 EZ705U	1000	1800	29.18	4669/160	3400	3000	5000	36	10.0	5.0	2.0	50	60
K6 (n_{1N} = 2000 min^{-1}, $M_{2acc,max}$ = 1600 Nm)																		
52	1428	1602	34	1.0	K613_0380 EZ813U	1600	2900	38.32	156953/4096	3100	2800	4500	107	10.0	5.0	2.0	83	99
58	1290	1447	34	1.1	K613_0350 EZ813U	1600	2900	34.61	35441/1024	3100	2800	4500	107	10.0	5.0	2.0	83	99
63	1187	1332	34	1.1	K613_0320 EZ813U	1600	2900	31.86	130479/4096	3100	2800	4500	108	10.0	5.0	2.0	83	99
70	1072	1203	34	1.2	K613_0290 EZ813U	1600	2900	28.77	29463/1024	3100	2800	4500	108	10.0	5.0	2.0	83	99
83	895	1004	34	1.4	K613_0240 EZ813U	1600	2900	24.01	24583/1024	2600	2300	4000	110	10.0	5.0	2.0	83	99
92	808	907	35	1.5	K613_0220 EZ813U	1600	2900	21.68	5551/256	2600	2300	4000	110	10.0	5.0	2.0	83	99
105	708	794	35	1.6	K613_0190 EZ813U	1600	2900	18.99	17019/896	2600	2300	4000	112	10.0	5.0	2.0	83	99
105	1049	1249	51	1.1	K613_0190 EZ815U	1600	2900	18.99	17019/896	2600	2300	4000	175	10.0	5.0	2.0	83	111
117	639	717	35	1.7	K613_0170 EZ813U	1600	2900	17.16	549/32	2600	2300	4000	112	10.0	5.0	2.0	83	99
117	947	1128	52	1.2	K613_0170 EZ815U	1600	2900	17.16	549/32	2600	2300	4000	176	10.0	5.0	2.0	83	111
126	591	663	35	1.8	K613_0160 EZ813U	1600	2900	15.87	54839/3456	2200	2000	3500	115	10.0	5.0	2.0	83	99
126	876	1043	52	1.2	K613_0160 EZ815U	1600	2900	15.87	54839/3456	2200	2000	3500	178	10.0	5.0	2.0	83	111
140	534	599	35	2.0	K613_0145 EZ813U	1600	2739	14.33	12383/864	2200	2000	3500	115	10.0	5.0	2.0	83	99
140	791	942	52	1.3	K613_0145 EZ815U	1600	2739	14.33	12383/864	2200	2000	3500	178	10.0	5.0	2.0	83	111
158	471	528	35	2.1	K613_0125 EZ813U	1600	2414	12.63	3233/256	2200	2000	3500	118	10.0	5.0	2.0	83	99
158	697	830	52	1.4	K613_0125 EZ815U	1600	2414	12.63	3233/256	2200	2000	3500	182	10.0	5.0	2.0	83	111
175	425	477	35	2.3	K613_0115 EZ813U	1527	2181	11.41	22631/1984	2200	2000	3500	119	10.0	5.0	2.0	83	99
175	630	750	52	1.5	K613_0115 EZ815U	1594	2181	11.41	22631/1984	2200	2000	3500	182	10.0	5.0	2.0	83	111
247	302	339	36	2.9	K613_0081 EZ813U	1085	2900	8.107	85095/10496	1800	1700	3000	131	10.0	5.0	2.0	83	99
247	448	533	53	1.9	K613_0081 EZ815U	1422	2900	8.107	85095/10496	1800	1700	3000	194	10.0	5.0	2.0	83	111
273	273	306	36	3.1	K613_0073 EZ813U	980	2625	7.323	19215/2624	1800	1700	3000	134	10.0	5.0	2.0	83	99
273	404	481	53	2.1	K613_0073 EZ815U	1375	2625	7.323	19215/2624	1800	1700	3000	197	10.0	5.0	2.0	83	111
K6 (n_{1N} = 3000 min^{-1}, $M_{2acc,max}$ = 1600 Nm)																		
10	1191	1302	6.8	1.2	K614_2940 EZ501U	1600	2900	294.4	3674213/12480	3100	2800	4500	3.1	10.0	6.0	3.0	83	72
11	1076	1176	7.2	1.2	K614_2660 EZ501U	1577	2628	265.9	829661/3120	3100	2800	4500	3.1	10.0	6.0	3.0	83	72
12	997	1090	6.4	1.5	K614_2460 EZ501U	1600	2900	246.3	1261297/5120	3100	2800	4500	3.1	10.0	6.0	3.0	83	72
13	900	984	6.2	1.6	K614_2230 EZ501U	1600	2781	222.5	284809/1280	3100	2800	4500	3.1	10.0	6.0	3.0	83	72
16	747	816	5.9	1.9	K614_1850 EZ501U	1600	2294	184.6	383873/2080	3100	2800	4500	3.2	10.0	6.0	3.0	83	72
16	1285	1389	10	1.1	K614_1850 EZ502U	1600	2294	184.6	383873/2080	3100	2800	4500	5.5	10.0	6.0	3.0	83	73
18	674	737	5.7	2.1	K614_1670 EZ501U	1600	2072	166.7	86681/520	3100	2800	4500	3.2	10.0	6.0	3.0	83	72
18	1161	1255	9.9	1.2	K614_1670 EZ502U	1600	2072	166.7	86681/520	3100	2800	4500	5.5	10.0	6.0	3.0	83	73
20	600	655	5.5	2.4	K614_1480 EZ501U	1600	2174	148.2	4551637/30720	3100	2800	4500	3.2	10.0	6.0	3.0	83	72
20	1032	1115	9.5	1.4	K614_1480 EZ502U	1600	2174	148.2	4551637/30720	3100	2800	4500	5.5	10.0	6.0	3.0	83	73
20	1352	1548	12	1.1	K614_1480 EZ503U	1600	2174	148.2	4551637/30720	3100	2800	4500	7.9	10.0	6.0	3.0	83	75
22	542	592	5.6	2.5	K614_1340 EZ501U	1571	1964	133.8	1027789/7680	3100	2800	4500	3.2	10.0	6.0	3.0	83	72
22	932	1007	9.7	1.5	K614_1340 EZ502U	1571	1964	133.8	1027789/7680	3100	2800	4500	5.5	10.0	6.0	3.0	83	73
22	1222	1398	13	1.1	K614_1340 EZ503U	1571	1964	133.8	1027789/7680	3100	2800	4500	7.9	10.0	6.0	3.0	83	75
24	498	545	5.2	2.9	K614_1230 EZ501U	1600	2003	123.2	1261297/10240	3100	2800	4500	3.3	10.0	6.0	3.0	83	72
24	858	927	9.0	1.7	K614_1230 EZ502U	1600	2003	123.2	1261297/10240	3100	2800	4500	5.6	10.0	6.0	3.0	83	73
24	1124	1287	12	1.3	K614_1230 EZ503U	1600	2003	123.2	1261297/10240	3100	2800	4500	8.0	10.0	6.0	3.0	83	75
27	450	492	5.5	3.0	K614_1110 EZ501U	1448	1809	111.3	284809/2560	3100	2800	4500	3.3	10.0	6.0	3.0	83	72
27	775	838	9.5	1.7	K614_1110 EZ502U	1448	1809	111.3	284809/2560	3100	2800	4500	5.6	10.0	6.0	3.0	83	73
27	1015	1162	12	1.3	K614_1110 EZ503U	1448	1809	111.3	284809/2560	3100	2800	4500	8.0	10.0	6.0	3.0	83	75
31	392	429	6.6	2.7	K613_0950 EZ501U	1290	1888	95.41	293105/3072	3100	2800	4500	3.5	10.0	5.0	2.0	83	68
31	675	730	11	1.6	K613_0950 EZ502U	1290	1888	95.41	293105/3072	3100	2800	4500	5.8	10.0	5.0	2.0	83	70
31	675	757	11	1.6	K613_0950 EZ701U	1290	1888	95.41	293105/3072	3100	2800	4500	9.1	10.0	5.0	2.0	83	71
31	885	1012	15	1.2	K613_0950 EZ503U	1290	1888	95.41	293105/3072	3100	2800	4500	8.1	10.0	5.0	2.0	83	71
35	354	387	7.1	2.7	K613_0860 EZ501U	1165	1706	86.18	66185/768	3100	2800	4500	3.5	10.0	5.0	2.0	83	68
35	610	659	12	1.6	K613_0860 EZ502U	1165	1706	86.18	66185/768	3100	2800	4500	5.8	10.0	5.0	2.0	83	70
35	610	684	12	1.6	K613_0860 EZ701U	1165	1706	86.18	66185/768	3100	2800	4500	9.1	10.0	5.0	2.0	83	71
35	799	914	16	1.2	K613_0860 EZ503U	1165	1706	86.18	66185/768	3100	2800	4500	8.2	10.0	5.0	2.0	83	71
39	313	342	5.5	3.8	K613_0760 EZ501U	1165	1501	76.14	126697/1664	3100	2800	4500	3.7	10.0	5.0	2.0	83	68

n_{2N} [rpm]	M_{2N} [Nm]	$M_{2,0}$ [Nm]	a_{th}	S	Type	M_{2acc} [Nm]	M_{2NOT} [Nm]	i	i_{exakt}	n_{1maxDB} EL1,2 [rpm]	n_{1maxDB} EL3,4,5,6 [rpm]	n_{1maxZB} [rpm]	J_1 [kgcm²]	$\Delta\varphi_2$ [arcmin]	$\Delta\varphi_{2redII}$ [arcmin]	$\Delta\varphi_{2redI}$ [arcmin]	C_2 [Nm/ arcmin]	m [kg]
K6 (n_{1N} = 3000 min^{-1}, $M_{2acc,max}$ = 1600 Nm)																		
39	539	582	9.5	2.2	K613_0760 EZ502U	1200	1501	76.14	126697/1664	3100	2800	4500	6.0	10.0	5.0	2.0	83	70
39	539	604	7.9	2.7	K613_0760 EZ701U	1456	2900	76.14	126697/1664	3100	2800	4500	9.3	10.0	5.0	2.0	83	71
39	706	808	12	1.7	K613_0760 EZ503U	1200	1501	76.14	126697/1664	3100	2800	4500	8.4	10.0	5.0	2.0	83	71
39	873	1048	13	1.7	K613_0760 EZ702U	1600	2900	76.14	126697/1664	3100	2800	4500	15	10.0	5.0	2.0	83	74
39	983	1165	14	1.5	K613_0760 EZ505U	1600	2900	76.14	126697/1664	3100	2800	4500	13	10.0	5.0	2.0	83	74
39	1201	1514	18	1.2	K613_0760 EZ703U	1600	2900	76.14	126697/1664	3100	2800	4500	22	10.0	5.0	2.0	83	76
44	283	309	5.9	3.8	K613_0690 EZ501U	1052	1355	68.77	28609/416	3100	2800	4500	3.8	10.0	5.0	2.0	83	68
44	487	526	10	2.2	K613_0690 EZ502U	1084	1355	68.77	28609/416	3100	2800	4500	6.1	10.0	5.0	2.0	83	70
44	487	546	8.4	2.7	K613_0690 EZ701U	1315	2628	68.77	28609/416	3100	2800	4500	9.4	10.0	5.0	2.0	83	71
44	638	730	13	1.7	K613_0690 EZ503U	1084	1355	68.77	28609/416	3100	2800	4500	8.4	10.0	5.0	2.0	83	71
44	789	947	14	1.7	K613_0690 EZ702U	1577	2628	68.77	28609/416	3100	2800	4500	15	10.0	5.0	2.0	83	74
44	888	1052	15	1.5	K613_0690 EZ505U	1577	2628	68.77	28609/416	3100	2800	4500	13	10.0	5.0	2.0	83	74
44	1085	1368	19	1.2	K613_0690 EZ703U	1577	2628	68.77	28609/416	3100	2800	4500	22	10.0	5.0	2.0	83	76
47	451	506	7.5	3.2	K613_0640 EZ701U	1218	2900	63.71	130479/2048	3100	2800	4500	9.6	10.0	5.0	2.0	83	71
47	731	877	12	2.0	K613_0640 EZ702U	1600	2900	63.71	130479/2048	3100	2800	4500	15	10.0	5.0	2.0	83	74
47	822	975	14	1.8	K613_0640 EZ505U	1600	2900	63.71	130479/2048	3100	2800	4500	13	10.0	5.0	2.0	83	74
47	1005	1267	17	1.4	K613_0640 EZ703U	1600	2900	63.71	130479/2048	3100	2800	4500	23	10.0	5.0	2.0	83	76
52	407	457	7.3	3.6	K613_0580 EZ701U	1100	2781	57.55	29463/512	3100	2800	4500	9.7	10.0	5.0	2.0	83	71
52	660	792	12	2.2	K613_0580 EZ702U	1600	2781	57.55	29463/512	3100	2800	4500	15	10.0	5.0	2.0	83	74
52	743	880	13	1.9	K613_0580 EZ505U	1600	2781	57.55	29463/512	3100	2800	4500	13	10.0	5.0	2.0	83	74
52	908	1144	16	1.6	K613_0580 EZ703U	1600	2781	57.55	29463/512	3100	2800	4500	23	10.0	5.0	2.0	83	76
63	338	379	7.3	4.0	K613_0480 EZ701U	913	2294	47.73	39711/832	3100	2800	4500	10	10.0	5.0	2.0	83	71
63	548	657	12	2.5	K613_0480 EZ702U	1600	2294	47.73	39711/832	3100	2800	4500	16	10.0	5.0	2.0	83	74
63	616	730	13	2.2	K613_0480 EZ505U	1600	2294	47.73	39711/832	3100	2800	4500	14	10.0	5.0	2.0	83	74
63	753	949	16	1.8	K613_0480 EZ703U	1600	2294	47.73	39711/832	3100	2800	4500	23	10.0	5.0	2.0	83	76
70	305	342	7.3	4.3	K613_0430 EZ701U	824	2072	43.11	8967/208	3100	2800	4500	10	10.0	5.0	2.0	83	71
70	495	593	12	2.7	K613_0430 EZ702U	1600	2072	43.11	8967/208	3100	2800	4500	16	10.0	5.0	2.0	83	74
70	556	659	13	2.4	K613_0430 EZ505U	1600	2072	43.11	8967/208	3100	2800	4500	14	10.0	5.0	2.0	83	74
70	680	857	16	1.9	K613_0430 EZ703U	1600	2072	43.11	8967/208	3100	2800	4500	24	10.0	5.0	2.0	83	76
78	271	304	7.4	4.7	K613_0380 EZ701U	733	2174	38.32	156953/4096	3100	2800	4500	11	10.0	5.0	2.0	83	71
78	440	528	12	2.9	K613_0380 EZ702U	1502	2174	38.32	156953/4096	3100	2800	4500	16	10.0	5.0	2.0	83	74
78	495	586	13	2.6	K613_0380 EZ505U	1600	2174	38.32	156953/4096	3100	2800	4500	15	10.0	5.0	2.0	83	74
78	604	762	16	2.1	K613_0380 EZ703U	1600	2174	38.32	156953/4096	3100	2800	4500	24	10.0	5.0	2.0	83	76
78	780	1106	21	1.6	K613_0380 EZ705U	1600	2900	38.32	156953/4096	3100	2800	4500	37	10.0	5.0	2.0	83	81
87	245	275	7.4	5.0	K613_0350 EZ701U	662	1964	34.61	35441/1024	3100	2800	4500	11	10.0	5.0	2.0	83	71
87	397	476	12	3.1	K613_0350 EZ702U	1357	1964	34.61	35441/1024	3100	2800	4500	16	10.0	5.0	2.0	83	74
87	447	529	13	2.7	K613_0350 EZ505U	1571	1964	34.61	35441/1024	3100	2800	4500	15	10.0	5.0	2.0	83	74
87	546	688	16	2.2	K613_0350 EZ703U	1571	1964	34.61	35441/1024	3100	2800	4500	24	10.0	5.0	2.0	83	76
87	705	999	21	1.7	K613_0350 EZ705U	1600	2900	34.61	35441/1024	3100	2800	4500	37	10.0	5.0	2.0	83	81
94	365	439	12	3.2	K613_0320 EZ702U	1249	2003	31.86	130479/4096	3100	2800	4500	17	10.0	5.0	2.0	83	74
94	411	487	14	2.9	K613_0320 EZ505U	1600	2003	31.86	130479/4096	3100	2800	4500	16	10.0	5.0	2.0	83	74
94	502	633	17	2.4	K613_0320 EZ703U	1600	2003	31.86	130479/4096	3100	2800	4500	25	10.0	5.0	2.0	83	76
94	649	920	21	1.8	K613_0320 EZ705U	1600	2900	31.86	130479/4096	3100	2800	4500	38	10.0	5.0	2.0	83	81
104	330	396	12	3.5	K613_0290 EZ702U	1128	1809	28.77	29463/1024	3100	2800	4500	17	10.0	5.0	2.0	83	74
104	371	440	14	3.1	K613_0290 EZ505U	1448	1809	28.77	29463/1024	3100	2800	4500	16	10.0	5.0	2.0	83	74
104	454	572	17	2.5	K613_0290 EZ703U	1448	1809	28.77	29463/1024	3100	2800	4500	25	10.0	5.0	2.0	83	76
104	586	831	21	2.0	K613_0290 EZ705U	1600	2900	28.77	29463/1024	3100	2800	4500	38	10.0	5.0	2.0	83	81
125	489	693	22	2.2	K613_0240 EZ705U	1600	2900	24.01	24583/1024	2600	2300	4000	40	10.0	5.0	2.0	83	81
138	442	626	22	2.4	K613_0220 EZ705U	1600	2900	21.68	5551/256	2600	2300	4000	40	10.0	5.0	2.0	83	81
158	218	261	12	4.6	K613_0190 EZ702U	744	1361	18.99	17019/896	2600	2300	4000	21	10.0	5.0	2.0	83	74
158	245	291	14	4.1	K613_0190 EZ505U	1089	1361	18.99	17019/896	2600	2300	4000	20	10.0	5.0	2.0	83	74
158	300	378	17	3.3	K613_0190 EZ703U	1089	1361	18.99	17019/896	2600	2300	4000	29	10.0	5.0	2.0	83	76
158	387	548	22	2.6	K613_0190 EZ705U	1600	2900	18.99	17019/896	2600	2300	4000	42	10.0	5.0	2.0	83	81
175	197	236	12	4.9	K613_0170 EZ702U	672	1229	17.16	549/32	2600	2300	4000	22	10.0	5.0	2.0	83	74
175	221	262	14	4.4	K613_0170 EZ505U	984	1229	17.16	549/32	2600	2300	4000	20	10.0	5.0	2.0	83	74
175	271	341	17	3.6	K613_0170 EZ703U	984	1229	17.16	549/32	2600	2300	4000	30	10.0	5.0	2.0	83	76
175	349	495	22	2.8	K613_0170 EZ705U	1600	2900	17.16	549/32	2600	2300	4000	42	10.0	5.0	2.0	83	81
189	323	458	22	2.9	K613_0160 EZ705U	1578	2900	15.87	54839/3456	2200	2000	3500	44	10.0	5.0	2.0	83	81
209	292	414	22	3.1	K613_0145 EZ705U	1425	2739	14.33	12383/864	2200	2000	3500	45	10.0	5.0	2.0	83	81
238	257	365	22	3.4	K613_0125 EZ705U	1256	2414	12.63	3233/256	2200	2000	3500	48	10.0	5.0	2.0	83	81
263	232	329	22	3.6	K613_0115 EZ705U	1134	2181	11.41	22631/1984	2200	2000	3500	49	10.0	5.0	2.0	83	81
370	165	234	22	4.6	K613_0081 EZ705U	806	1550	8.107	85095/10496	1800	1700	3000	61	10.0	5.0	2.0	83	81
410	149	211	22	4.9	K613_0073 EZ705U	728	1400	7.323	19215/2624	1800	1700	3000	63	10.0	5.0	2.0	83	81

n_{2N} [rpm]	M_{2N} [Nm]	$M_{2,0}$ [Nm]	a_{th}	S	Type	M_{2acc} [Nm]	M_{2NOT} [Nm]	i	i_{exakt}	n_{1maxDB} EL1,2 [rpm]	n_{1maxDB} EL3,4,5,6 [rpm]	n_{1maxZB} [rpm]	J_1 [kgcm²]	$\Delta\varphi_2$ [arcmin]	$\Delta\varphi_{2redII}$ [arcmin]	$\Delta\varphi_{2redI}$ [arcmin]	C_2 [Nm/ arcmin]	m [kg]
K6 (n_{1N} = 4000 min^{-1}, $M_{2acc,max}$ = 1600 Nm)																		
104	923	1601	28	1.2	K613_0380 EZ813U	1600	2900	38.32	156953/4096	3100	2800	4500	107	10.0	5.0	2.0	83	99
104	956	2460	29	1.2	K613_0380 EZ815U	1600	2900	38.32	156953/4096	3100	2800	4500	170	10.0	5.0	2.0	83	111
116	834	1446	28	1.3	K613_0350 EZ813U	1600	2900	34.61	35441/1024	3100	2800	4500	107	10.0	5.0	2.0	83	99
116	864	2221	29	1.3	K613_0350 EZ815U	1600	2900	34.61	35441/1024	3100	2800	4500	170	10.0	5.0	2.0	83	111
126	767	1331	28	1.4	K613_0320 EZ813U	1600	2900	31.86	130479/4096	3100	2800	4500	108	10.0	5.0	2.0	83	99
126	795	2045	29	1.4	K613_0320 EZ815U	1600	2900	31.86	130479/4096	3100	2800	4500	171	10.0	5.0	2.0	83	111
139	693	1202	28	1.5	K613_0290 EZ813U	1600	2900	28.77	29463/1024	3100	2800	4500	108	10.0	5.0	2.0	83	99
139	718	1847	29	1.5	K613_0290 EZ815U	1600	2900	28.77	29463/1024	3100	2800	4500	171	10.0	5.0	2.0	83	111
167	578	1003	28	1.7	K613_0240 EZ813U	1600	2900	24.01	24583/1024	2600	2300	4000	110	10.0	5.0	2.0	83	99
167	599	1541	29	1.6	K613_0240 EZ815U	1600	2900	24.01	24583/1024	2600	2300	4000	173	10.0	5.0	2.0	83	111
184	522	906	28	1.8	K613_0220 EZ813U	1600	2900	21.68	5551/256	2600	2300	4000	110	10.0	5.0	2.0	83	99
184	541	1392	29	1.8	K613_0220 EZ815U	1600	2900	21.68	5551/256	2600	2300	4000	173	10.0	5.0	2.0	83	111
211	458	794	28	2.0	K613_0190 EZ813U	1600	2900	18.99	17019/896	2600	2300	4000	112	10.0	5.0	2.0	83	99
211	474	1219	29	1.9	K613_0190 EZ815U	1600	2900	18.99	17019/896	2600	2300	4000	175	10.0	5.0	2.0	83	111
233	413	717	28	2.1	K613_0170 EZ813U	1600	2900	17.16	549/32	2600	2300	4000	112	10.0	5.0	2.0	83	99
233	428	1101	29	2.1	K613_0170 EZ815U	1600	2900	17.16	549/32	2600	2300	4000	176	10.0	5.0	2.0	83	111
K6 (n_{1N} = 4500 min^{-1}, $M_{2acc,max}$ = 1600 Nm)																		
59	692	1114	11	2.0	K613_0760 EZ505U	1600	2900	76.14	126697/1664	3100	2800	4500	13	10.0	5.0	2.0	83	74
59	881	1456	13	1.6	K613_0760 EZ703U	1600	2900	76.14	126697/1664	3100	2800	4500	22	10.0	5.0	2.0	83	76
65	625	1006	11	2.1	K613_0690 EZ505U	1577	2628	68.77	28609/416	3100	2800	4500	13	10.0	5.0	2.0	83	74
65	796	1315	14	1.7	K613_0690 EZ703U	1577	2628	68.77	28609/416	3100	2800	4500	22	10.0	5.0	2.0	83	76
71	579	932	11	2.3	K613_0640 EZ505U	1600	2900	63.71	130479/2048	3100	2800	4500	13	10.0	5.0	2.0	83	74
71	737	1218	14	1.8	K613_0640 EZ703U	1600	2900	63.71	130479/2048	3100	2800	4500	23	10.0	5.0	2.0	83	76
78	523	842	11	2.4	K613_0580 EZ505U	1600	2781	57.55	29463/512	3100	2800	4500	13	10.0	5.0	2.0	83	74
78	666	1100	14	1.9	K613_0580 EZ703U	1600	2781	57.55	29463/512	3100	2800	4500	23	10.0	5.0	2.0	83	76
94	433	698	11	2.7	K613_0480 EZ505U	1600	2294	47.73	39711/832	3100	2800	4500	14	10.0	5.0	2.0	83	74
94	552	913	14	2.2	K613_0480 EZ703U	1600	2294	47.73	39711/832	3100	2800	4500	23	10.0	5.0	2.0	83	76
104	392	631	11	2.9	K613_0430 EZ505U	1600	2072	43.11	8967/208	3100	2800	4500	14	10.0	5.0	2.0	83	74
104	499	824	14	2.3	K613_0430 EZ703U	1600	2072	43.11	8967/208	3100	2800	4500	24	10.0	5.0	2.0	83	76
117	348	560	11	3.2	K613_0380 EZ505U	1600	2174	38.32	156953/4096	3100	2800	4500	15	10.0	5.0	2.0	83	74
117	443	733	14	2.5	K613_0380 EZ703U	1600	2174	38.32	156953/4096	3100	2800	4500	24	10.0	5.0	2.0	83	76
117	601	1099	19	1.8	K613_0380 EZ705U	1600	2900	38.32	156953/4096	3100	2800	4500	37	10.0	5.0	2.0	83	81
130	314	506	11	3.4	K613_0350 EZ505U	1571	1964	34.61	35441/1024	3100	2800	4500	15	10.0	5.0	2.0	83	74
130	400	662	14	2.7	K613_0350 EZ703U	1571	1964	34.61	35441/1024	3100	2800	4500	24	10.0	5.0	2.0	83	76
130	543	993	19	2.0	K613_0350 EZ705U	1600	2900	34.61	35441/1024	3100	2800	4500	37	10.0	5.0	2.0	83	81
141	289	466	11	3.6	K613_0320 EZ505U	1600	2003	31.86	130479/4096	3100	2800	4500	16	10.0	5.0	2.0	83	74
141	368	609	14	2.8	K613_0320 EZ703U	1600	2003	31.86	130479/4096	3100	2800	4500	25	10.0	5.0	2.0	83	76
141	499	914	19	2.1	K613_0320 EZ705U	1600	2900	31.86	130479/4096	3100	2800	4500	38	10.0	5.0	2.0	83	81
156	261	421	11	3.8	K613_0290 EZ505U	1448	1809	28.77	29463/1024	3100	2800	4500	16	10.0	5.0	2.0	83	74
156	333	550	14	3.0	K613_0290 EZ703U	1448	1809	28.77	29463/1024	3100	2800	4500	25	10.0	5.0	2.0	83	76
156	451	825	19	2.2	K613_0290 EZ705U	1600	2900	28.77	29463/1024	3100	2800	4500	38	10.0	5.0	2.0	83	81
K7 (n_{1N} = 2000 min^{-1}, $M_{2acc,max}$ = 2600 Nm)																		
34	2183	2449	25	1.1	K713_0590 EZ813U	2600	4800	58.57	7497/128	2900	2600	4200	107	10.0	5.0	2.0	126	127
40	1859	2085	24	1.3	K713_0500 EZ813U	2600	4800	49.88	166005/3328	2900	2600	4200	108	10.0	5.0	2.0	126	127
44	1679	1884	23	1.4	K713_0450 EZ813U	2600	4800	45.05	37485/832	2900	2600	4200	108	10.0	5.0	2.0	126	127
51	1462	1640	23	1.6	K713_0390 EZ813U	2600	4800	39.23	2511/64	2900	2600	4200	110	10.0	5.0	2.0	126	127
51	2166	2579	33	1.1	K713_0390 EZ815U	2600	4800	39.23	2511/64	2900	2600	4200	173	10.0	5.0	2.0	126	140
56	1321	1482	23	1.7	K713_0350 EZ813U	2600	4558	35.44	567/16	2900	2600	4200	110	10.0	5.0	2.0	126	127
56	1956	2330	34	1.2	K713_0350 EZ815U	2600	4558	35.44	567/16	2900	2600	4200	173	10.0	5.0	2.0	126	140
62	1209	1355	23	1.9	K713_0320 EZ813U	2600	4800	32.42	33201/1024	2900	2600	4200	112	10.0	5.0	2.0	126	127
62	1790	2131	34	1.3	K713_0320 EZ815U	2600	4800	32.42	33201/1024	2900	2600	4200	175	10.0	5.0	2.0	126	140
68	1092	1224	23	2.0	K713_0290 EZ813U	2600	4800	29.29	7497/256	2900	2600	4200	112	10.0	5.0	2.0	126	127
68	1617	1925	34	1.3	K713_0290 EZ815U	2600	4800	29.29	7497/256	2900	2600	4200	176	10.0	5.0	2.0	126	140
79	938	1052	23	2.2	K713_0250 EZ813U	2600	4800	25.18	64449/2560	2400	2200	3600	116	10.0	5.0	2.0	126	127
79	1390	1655	34	1.5	K713_0250 EZ815U	2600	4800	25.18	64449/2560	2400	2200	3600	179	10.0	5.0	2.0	126	140
88	848	951	23	2.3	K713_0230 EZ813U	2600	4800	22.74	14553/640	2400	2200	3600	117	10.0	5.0	2.0	126	127
88	1255	1495	34	1.6	K713_0230 EZ815U	2600	4800	22.74	14553/640	2400	2200	3600	180	10.0	5.0	2.0	126	140
99	754	846	23	2.5	K713_0200 EZ813U	2600	4800	20.23	119133/5888	2400	2200	3600	120	10.0	5.0	2.0	126	127
99	1117	1330	34	1.7	K713_0200 EZ815U	2600	4800	20.23	119133/5888	2400	2200	3600	184	10.0	5.0	2.0	126	140
109	681	764	23	2.7	K713_0185 EZ813U	2446	4800	18.28	26901/1472	2400	2200	3600	121	10.0	5.0	2.0	126	127
109	1009	1201	34	1.8	K713_0185 EZ815U	2600	4800	18.28	26901/1472	2400	2200	3600	184	10.0	5.0	2.0	126	140
122	611	685	23	2.9	K713_0165 EZ813U	2193	4800	16.39	6293/384	2000	1900	3200	126	10.0	5.0	2.0	126	127
122	905	1077	34	2.0	K713_0165 EZ815U	2600	4800	16.39	6293/384	2000	1900	3200	189	10.0	5.0	2.0	126	140
135	552	619	23	3.1	K713_0150 EZ813U	1981	4800	14.80	1421/96	2000	1900	3200	127	10.0	5.0	2.0	126	127

n_{2N}	M_{2N}	$M_{2,0}$	a_{th}	S	Type	M_{2acc}	M_{2NOT}	i	i_{exakt}	n_{1maxDB}		n_{1maxZB}	J_1	$\Delta\varphi_2$	$\Delta\varphi_{2redII}$	$\Delta\varphi_{2redI}$	C_2	m
										EL1,2	EL3,4,5,6							
[rpm]	[Nm]	[Nm]				[Nm]	[Nm]			[rpm]	[rpm]	[rpm]	[kgcm²]	[arcmin]	[arcmin]	[arcmin]	[Nm/ arcmin]	[kg]
K7 (n_{1N} = 2000 min^{-1}, $M_{2acc,max}$ = 2600 Nm)																		
135	817	973	35	2.1	K713_0150 EZ815U	2600	4800	14.80	1421/96	2000	1900	3200	190	10.0	5.0	2.0	126	140
153	486	545	23	3.4	K713_0130 EZ813U	1746	4675	13.04	3339/256	2000	1900	3200	133	10.0	5.0	2.0	126	127
153	720	857	35	2.3	K713_0130 EZ815U	2494	4675	13.04	3339/256	2000	1900	3200	197	10.0	5.0	2.0	126	140
170	439	493	23	3.6	K713_0120 EZ813U	1577	4223	11.78	23373/1984	2000	1900	3200	135	10.0	5.0	2.0	126	127
170	650	774	35	2.5	K713_0120 EZ815U	2253	4223	11.78	23373/1984	2000	1900	3200	198	10.0	5.0	2.0	126	140
197	379	425	24	4.0	K713_0100 EZ813U	1361	3645	10.17	651/64	1700	1600	2700	146	10.0	5.0	2.0	126	127
197	562	669	35	2.7	K713_0100 EZ815U	1945	3645	10.17	651/64	1700	1600	2700	209	10.0	5.0	2.0	126	140
218	342	384	24	4.3	K713_0092 EZ813U	1230	3292	9.188	147/16	1700	1600	2700	149	10.0	5.0	2.0	126	127
218	507	604	35	2.9	K713_0092 EZ815U	1757	3292	9.188	147/16	1700	1600	2700	212	10.0	5.0	2.0	126	140
239	312	350	24	4.6	K713_0084 EZ813U	1121	3002	8.373	87885/10496	1700	1600	2700	159	10.0	5.0	2.0	126	127
239	462	550	35	3.1	K713_0084 EZ815U	1601	3002	8.373	87885/10496	1700	1600	2700	223	10.0	5.0	2.0	126	140
264	282	316	24	4.9	K713_0076 EZ813U	1012	2712	7.563	19845/2624	1700	1600	2700	164	10.0	5.0	2.0	126	127
264	418	497	35	3.3	K713_0076 EZ815U	1446	2712	7.563	19845/2624	1700	1600	2700	227	10.0	5.0	2.0	126	140
K7 (n_{1N} = 3000 min^{-1}, $M_{2acc,max}$ = 2600 Nm)																		
7.9	1542	1685	6.2	1.2	K714_3810 EZ501U	2221	3225	381.0	195083/512	2900	2600	4200	3.1	10.0	6.0	3.0	126	105
8.7	1393	1522	6.7	1.2	K714_3440 EZ501U	2006	2913	344.1	44051/128	2900	2600	4200	3.1	10.0	6.0	3.0	126	105
9.8	1233	1348	5.3	1.7	K714_3050 EZ501U	2514	3143	304.8	195083/640	2900	2600	4200	3.2	10.0	6.0	3.0	126	105
11	1114	1218	5.7	1.7	K714_2750 EZ501U	2271	2839	275.3	44051/160	2900	2600	4200	3.2	10.0	6.0	3.0	126	105
12	1769	1984	7.3	1.4	K714_2540 EZ701U	2600	4800	254.0	520149/2048	2900	2600	4200	9.1	10.0	6.0	3.0	126	108
12	1015	1109	5.1	2.0	K714_2510 EZ501U	2245	2807	250.7	320943/1280	2900	2600	4200	3.2	10.0	6.0	3.0	126	105
12	1746	1888	8.8	1.1	K714_2510 EZ502U	2245	2807	250.7	320943/1280	2900	2600	4200	5.5	10.0	6.0	3.0	126	106
13	1597	1792	7.1	1.5	K714_2290 EZ701U	2600	4800	229.4	117453/512	2900	2600	4200	9.1	10.0	6.0	3.0	126	108
13	916	1002	5.5	2.0	K714_2260 EZ501U	2028	2535	226.5	72471/320	2900	2600	4200	3.2	10.0	6.0	3.0	126	105
13	1577	1705	9.5	1.1	K714_2260 EZ502U	2028	2535	226.5	72471/320	2900	2600	4200	5.5	10.0	6.0	3.0	126	106
15	1360	1526	6.8	1.8	K714_1950 EZ701U	2600	4800	195.4	2600745/13312	2900	2600	4200	9.2	10.0	6.0	3.0	126	108
15	2206	2647	11	1.1	K714_1950 EZ702U	2600	4800	195.4	2600745/13312	2900	2600	4200	14	10.0	6.0	3.0	126	111
16	780	853	5.0	2.4	K714_1930 EZ501U	1938	2423	192.9	320943/1664	2900	2600	4200	3.3	10.0	6.0	3.0	126	105
16	1343	1452	8.7	1.4	K714_1930 EZ502U	1938	2423	192.9	320943/1664	2900	2600	4200	5.6	10.0	6.0	3.0	126	106
16	1760	2015	11	1.1	K714_1930 EZ503U	1938	2423	192.9	320943/1664	2900	2600	4200	8.0	10.0	6.0	3.0	126	108
17	1229	1378	6.6	2.0	K714_1760 EZ701U	2600	4800	176.5	587265/3328	2900	2600	4200	9.2	10.0	6.0	3.0	126	108
17	1993	2391	11	1.2	K714_1760 EZ702U	2600	4800	176.5	587265/3328	2900	2600	4200	14	10.0	6.0	3.0	126	111
17	705	770	5.4	2.4	K714_1740 EZ501U	1751	2189	174.2	72471/416	2900	2600	4200	3.3	10.0	6.0	3.0	126	105
17	1213	1311	9.3	1.4	K714_1740 EZ502U	1751	2189	174.2	72471/416	2900	2600	4200	5.6	10.0	6.0	3.0	126	106
17	1590	1820	12	1.1	K714_1740 EZ503U	1751	2189	174.2	72471/416	2900	2600	4200	8.0	10.0	6.0	3.0	126	108
20	1070	1200	6.3	2.2	K714_1540 EZ701U	2600	4800	153.7	39339/256	2900	2600	4200	9.3	10.0	6.0	3.0	126	108
20	1735	2082	10	1.4	K714_1540 EZ702U	2600	4800	153.7	39339/256	2900	2600	4200	15	10.0	6.0	3.0	126	111
20	2386	3008	14	1.0	K714_1540 EZ703U	2600	4800	153.7	39339/256	2900	2600	4200	22	10.0	6.0	3.0	126	113
20	614	671	5.0	2.9	K714_1520 EZ501U	1800	2250	151.7	24273/160	2900	2600	4200	3.5	10.0	6.0	3.0	126	105
20	1056	1142	8.5	1.7	K714_1520 EZ502U	1800	2250	151.7	24273/160	2900	2600	4200	5.8	10.0	6.0	3.0	126	106
20	1385	1585	11	1.3	K714_1520 EZ503U	1800	2250	151.7	24273/160	2900	2600	4200	8.1	10.0	6.0	3.0	126	108
22	966	1084	6.1	2.5	K714_1390 EZ701U	2600	4558	138.8	8883/64	2900	2600	4200	9.3	10.0	6.0	3.0	126	108
22	1567	1881	9.9	1.5	K714_1390 EZ702U	2600	4558	138.8	8883/64	2900	2600	4200	15	10.0	6.0	3.0	126	111
22	2155	2717	14	1.1	K714_1390 EZ703U	2600	4558	138.8	8883/64	2900	2600	4200	22	10.0	6.0	3.0	126	113
22	554	606	5.3	2.9	K714_1370 EZ501U	1626	2032	137.0	5481/40	2900	2600	4200	3.5	10.0	6.0	3.0	126	105
22	954	1032	9.2	1.7	K714_1370 EZ502U	1626	2032	137.0	5481/40	2900	2600	4200	5.8	10.0	6.0	3.0	126	106
22	1251	1431	12	1.3	K714_1370 EZ503U	1626	2032	137.0	5481/40	2900	2600	4200	8.1	10.0	6.0	3.0	126	108
24	884	992	6.0	2.7	K714_1270 EZ701U	2390	4524	127.0	520149/4096	2900	2600	4200	9.5	10.0	6.0	3.0	126	108
24	1434	1721	9.7	1.7	K714_1270 EZ702U	2600	4524	127.0	520149/4096	2900	2600	4200	15	10.0	6.0	3.0	126	111
24	1972	2486	13	1.2	K714_1270 EZ703U	2600	4524	127.0	520149/4096	2900	2600	4200	23	10.0	6.0	3.0	126	113
26	799	896	5.8	3.0	K714_1150 EZ701U	2159	4087	114.7	117453/1024	2900	2600	4200	9.5	10.0	6.0	3.0	126	108
26	1295	1554	9.4	1.9	K714_1150 EZ702U	2600	4087	114.7	117453/1024	2900	2600	4200	15	10.0	6.0	3.0	126	111
26	1781	2245	13	1.3	K714_1150 EZ703U	2600	4087	114.7	117453/1024	2900	2600	4200	23	10.0	6.0	3.0	126	113
30	687	770	5.5	3.5	K714_0990 EZ701U	1856	3805	98.60	1009701/10240	2900	2600	4200	9.7	10.0	6.0	3.0	126	108
30	1113	1336	9.0	2.2	K714_0990 EZ702U	2600	3805	98.60	1009701/10240	2900	2600	4200	15	10.0	6.0	3.0	126	111
30	1531	1930	12	1.6	K714_0990 EZ703U	2600	3805	98.60	1009701/10240	2900	2600	4200	23	10.0	6.0	3.0	126	113
30	697	782	7.3	2.7	K713_0990 EZ701U	1884	3225	98.54	100905/1024	2900	2600	4200	9.7	10.0	5.0	2.0	126	100
30	1130	1357	12	1.6	K713_0990 EZ702U	2221	3225	98.54	100905/1024	2900	2600	4200	15	10.0	5.0	2.0	126	102
30	1554	1959	16	1.2	K713_0990 EZ703U	2221	3225	98.54	100905/1024	2900	2600	4200	23	10.0	5.0	2.0	126	104
34	620	696	5.6	3.7	K714_0890 EZ701U	1676	3437	89.06	227997/2560	2900	2600	4200	9.7	10.0	6.0	3.0	126	108
34	1006	1207	9.1	2.3	K714_0890 EZ702U	2600	3437	89.06	227997/2560	2900	2600	4200	15	10.0	6.0	3.0	126	111
34	1383	1743	13	1.6	K714_0890 EZ703U	2600	3437	89.06	227997/2560	2900	2600	4200	23	10.0	6.0	3.0	126	113
34	630	706	7.8	2.7	K713_0890 EZ701U	1702	2913	89.00	22785/256	2900	2600	4200	9.7	10.0	5.0	2.0	126	100
34	1021	1225	13	1.6	K713_0890 EZ702U	2006	2913	89.00	22785/256	2900	2600	4200	15	10.0	5.0	2.0	126	102
34	1404	1770	17	1.2	K713_0890 EZ703U	2006	2913	89.00	22785/256	2900	2600	4200	23	10.0	5.0	2.0	126	104

n_{2N} [rpm]	M_{2N} [Nm]	$M_{2,0}$ [Nm]	a_{th}	S	Type	M_{2acc} [Nm]	M_{2NOT} [Nm]	i	i_{exakt}	n_{1maxDB} EL1,2 [rpm]	n_{1maxDB} EL3,4,5,6 [rpm]	n_{1maxZB} [rpm]	J_1 [kgcm²]	$\Delta\varphi_2$ [arcmin]	$\Delta\varphi_{2redII}$ [arcmin]	$\Delta\varphi_{2redI}$ [arcmin]	C_2 [Nm/arcmin]	m [kg]
K7 (n_{1N} = 3000 min^{-1}, $M_{2acc,max}$ = 2600 Nm)																		
38	558	626	5.2	4.3	K713_0790 EZ701U	1507	3143	78.83	20181/256	2900	2600	4200	10	10.0	5.0	2.0	126	100
38	904	1085	8.5	2.7	K713_0790 EZ702U	2514	3143	78.83	20181/256	2900	2600	4200	15	10.0	5.0	2.0	126	102
38	1243	1568	12	1.9	K713_0790 EZ703U	2514	3143	78.83	20181/256	2900	2600	4200	23	10.0	5.0	2.0	126	104
42	504	565	5.6	4.3	K713_0710 EZ701U	1361	2839	71.20	4557/64	2900	2600	4200	10	10.0	5.0	2.0	126	100
42	817	980	9.1	2.7	K713_0710 EZ702U	2271	2839	71.20	4557/64	2900	2600	4200	16	10.0	5.0	2.0	126	102
42	1123	1416	13	1.9	K713_0710 EZ703U	2271	2839	71.20	4557/64	2900	2600	4200	23	10.0	5.0	2.0	126	104
46	459	515	5.3	4.9	K713_0650 EZ701U	1240	2807	64.85	33201/512	2900	2600	4200	11	10.0	5.0	2.0	126	100
46	744	893	8.6	3.0	K713_0650 EZ702U	2245	2807	64.85	33201/512	2900	2600	4200	16	10.0	5.0	2.0	126	102
46	1023	1289	12	2.2	K713_0650 EZ703U	2245	2807	64.85	33201/512	2900	2600	4200	24	10.0	5.0	2.0	126	104
46	1320	1872	14	1.8	K713_0650 EZ705U	2600	4800	64.85	33201/512	2900	2600	4200	36	10.0	5.0	2.0	126	110
51	414	465	5.7	4.9	K713_0590 EZ701U	1120	2535	58.57	7497/128	2900	2600	4200	11	10.0	5.0	2.0	126	100
51	672	806	9.2	3.0	K713_0590 EZ702U	2028	2535	58.57	7497/128	2900	2600	4200	16	10.0	5.0	2.0	126	102
51	924	1165	13	2.2	K713_0590 EZ703U	2028	2535	58.57	7497/128	2900	2600	4200	24	10.0	5.0	2.0	126	104
51	1193	1691	14	2.0	K713_0590 EZ705U	2600	4800	58.57	7497/128	2900	2600	4200	37	10.0	5.0	2.0	126	110
60	572	687	9.2	3.4	K713_0500 EZ702U	1938	2423	49.88	166005/3328	2900	2600	4200	18	10.0	5.0	2.0	126	102
60	787	992	13	2.5	K713_0500 EZ703U	1938	2423	49.88	166005/3328	2900	2600	4200	26	10.0	5.0	2.0	126	104
60	1016	1440	14	2.2	K713_0500 EZ705U	2600	4800	49.88	166005/3328	2900	2600	4200	38	10.0	5.0	2.0	126	110
67	517	620	9.9	3.4	K713_0450 EZ702U	1751	2189	45.05	37485/832	2900	2600	4200	18	10.0	5.0	2.0	126	102
67	711	896	14	2.5	K713_0450 EZ703U	1751	2189	45.05	37485/832	2900	2600	4200	26	10.0	5.0	2.0	126	104
67	917	1301	14	2.4	K713_0450 EZ705U	2600	4800	45.05	37485/832	2900	2600	4200	38	10.0	5.0	2.0	126	110
76	450	540	9.2	4.0	K713_0390 EZ702U	1538	2250	39.23	2511/64	2900	2600	4200	20	10.0	5.0	2.0	126	102
76	619	780	13	2.9	K713_0390 EZ703U	1800	2250	39.23	2511/64	2900	2600	4200	27	10.0	5.0	2.0	126	104
76	799	1133	14	2.6	K713_0390 EZ705U	2600	4800	39.23	2511/64	2900	2600	4200	40	10.0	5.0	2.0	126	110
85	407	488	9.9	4.0	K713_0350 EZ702U	1389	2032	35.44	567/16	2900	2600	4200	20	10.0	5.0	2.0	126	102
85	559	705	14	2.9	K713_0350 EZ703U	1626	2032	35.44	567/16	2900	2600	4200	28	10.0	5.0	2.0	126	104
85	722	1023	14	2.8	K713_0350 EZ705U	2600	4558	35.44	567/16	2900	2600	4200	40	10.0	5.0	2.0	126	110
93	660	936	14	3.0	K713_0320 EZ705U	2600	4524	32.42	33201/1024	2900	2600	4200	42	10.0	5.0	2.0	126	110
102	596	845	14	3.2	K713_0290 EZ705U	2600	4087	29.29	7497/256	2900	2600	4200	42	10.0	5.0	2.0	126	110
119	513	727	14	3.5	K713_0250 EZ705U	2503	4179	25.18	64449/2560	2400	2200	3600	46	10.0	5.0	2.0	126	110
132	463	657	14	3.8	K713_0230 EZ705U	2261	3775	22.74	14553/640	2400	2200	3600	46	10.0	5.0	2.0	126	110
148	412	584	14	4.1	K713_0200 EZ705U	2012	3545	20.23	119133/5888	2400	2200	3600	50	10.0	5.0	2.0	126	110
164	372	528	14	4.3	K713_0185 EZ705U	1817	3202	18.28	26901/1472	2400	2200	3600	51	10.0	5.0	2.0	126	110
183	334	473	15	4.7	K713_0165 EZ705U	1629	3124	16.39	6293/384	2000	1900	3200	55	10.0	5.0	2.0	126	110
203	301	427	15	5.0	K713_0150 EZ705U	1472	2822	14.80	1421/96	2000	1900	3200	56	10.0	5.0	2.0	126	110
K7 (n_{1N} = 4000 min^{-1}, $M_{2acc,max}$ = 2600 Nm)																		
62	1562	2709	18	1.4	K713_0650 EZ813U	2600	4800	64.85	33201/512	2900	2600	4200	107	10.0	5.0	2.0	126	127
62	1619	4162	19	1.4	K713_0650 EZ815U	2600	4800	64.85	33201/512	2900	2600	4200	170	10.0	5.0	2.0	126	140
68	1411	2447	18	1.5	K713_0590 EZ813U	2600	4800	58.57	7497/128	2900	2600	4200	107	10.0	5.0	2.0	126	127
68	1462	3759	19	1.5	K713_0590 EZ815U	2600	4800	58.57	7497/128	2900	2600	4200	170	10.0	5.0	2.0	126	140
80	1202	2084	18	1.7	K713_0500 EZ813U	2600	4800	49.88	166005/3328	2900	2600	4200	108	10.0	5.0	2.0	126	127
80	1245	3202	19	1.6	K713_0500 EZ815U	2600	4800	49.88	166005/3328	2900	2600	4200	171	10.0	5.0	2.0	126	140
89	1085	1882	18	1.8	K713_0450 EZ813U	2600	4800	45.05	37485/832	2900	2600	4200	108	10.0	5.0	2.0	126	127
89	1125	2892	19	1.8	K713_0450 EZ815U	2600	4800	45.05	37485/832	2900	2600	4200	171	10.0	5.0	2.0	126	140
102	945	1639	18	2.0	K713_0390 EZ813U	2600	4800	39.23	2511/64	2900	2600	4200	110	10.0	5.0	2.0	126	127
102	979	2518	19	1.9	K713_0390 EZ815U	2600	4800	39.23	2511/64	2900	2600	4200	173	10.0	5.0	2.0	126	140
113	854	1481	18	2.1	K713_0350 EZ813U	2600	4558	35.44	567/16	2900	2600	4200	110	10.0	5.0	2.0	126	127
113	885	2275	19	2.1	K713_0350 EZ815U	2600	4558	35.44	567/16	2900	2600	4200	173	10.0	5.0	2.0	126	140
123	781	1355	18	2.3	K713_0320 EZ813U	2600	4800	32.42	33201/1024	2900	2600	4200	112	10.0	5.0	2.0	126	127
123	809	2081	19	2.2	K713_0320 EZ815U	2600	4800	32.42	33201/1024	2900	2600	4200	175	10.0	5.0	2.0	126	140
137	706	1223	19	2.4	K713_0290 EZ813U	2600	4800	29.29	7497/256	2900	2600	4200	112	10.0	5.0	2.0	126	127
137	731	1880	19	2.3	K713_0290 EZ815U	2600	4800	29.29	7497/256	2900	2600	4200	176	10.0	5.0	2.0	126	140
K8 (n_{1N} = 2000 min^{-1}, $M_{2acc,max}$ = 4650 Nm)																		
18	4140	4643	19	1.0	K814_1130 EZ813U	4650	8400	112.8	9027/80	2800	2500	4000	107	10.0	6.0	3.0	196	194
20	3611	4049	18	1.2	K814_0980 EZ813U	4650	8400	98.41	181071/1840	2800	2500	4000	108	10.0	6.0	3.0	196	194
23	3261	3658	17	1.3	K814_0890 EZ813U	4650	8259	88.89	40887/460	2800	2500	4000	108	10.0	6.0	3.0	196	194
25	2959	3319	18	1.3	K813_0790 EZ813U	4650	7637	79.38	45725/576	2800	2500	4000	108	10.0	5.0	2.0	196	180
27	2715	3045	17	1.5	K814_0740 EZ813U	4650	6874	73.99	1201653/16240	2800	2500	4000	109	10.0	6.0	3.0	196	194
27	4021	4788	24	1.0	K814_0740 EZ815U	4650	6874	73.99	1201653/16240	2800	2500	4000	172	10.0	6.0	3.0	196	206
28	2673	2998	19	1.3	K813_0720 EZ813U	4327	6898	71.70	10325/144	2800	2500	4000	108	10.0	5.0	2.0	196	180
30	2452	2750	16	1.7	K814_0670 EZ813U	4650	6209	66.83	38763/580	2800	2500	4000	109	10.0	6.0	3.0	196	194
30	3632	4324	24	1.2	K814_0670 EZ815U	4650	6209	66.83	38763/580	2800	2500	4000	172	10.0	6.0	3.0	196	206
31	2438	2735	16	1.7	K813_0650 EZ813U	4650	7073	65.41	188387/2880	2800	2500	4000	110	10.0	5.0	2.0	196	180
31	3611	4300	24	1.2	K813_0650 EZ815U	4650	7073	65.41	188387/2880	2800	2500	4000	173	10.0	5.0	2.0	196	193
34	2202	2470	16	1.9	K813_0590 EZ813U	4650	6388	59.08	42539/720	2800	2500	4000	110	10.0	5.0	2.0	196	180

n_{2N} [rpm]	M_{2N} [Nm]	$M_{2,0}$ [Nm]	a_{th}	S	Type	M_{2acc} [Nm]	M_{2NOT} [Nm]	i	i_{exakt}	n_{1maxDB} EL1,2 [rpm]	n_{1maxDB} EL3,4,5,6 [rpm]	n_{1maxZB} [rpm]	J_1 [kgcm²]	$\Delta\varphi_2$ [arcmin]	$\Delta\varphi_{2redII}$ [arcmin]	$\Delta\varphi_{2redI}$ [arcmin]	C_2 [Nm/arcmin]	m [kg]
K8 (n_{1N} = 2000 min^{-1}, $M_{2acc,max}$ = 4650 Nm)																		
34	3262	3884	23	1.3	K813_0590 EZ815U	4650	6388	59.08	42539/720	2800	2500	4000	173	10.0	5.0	2.0	196	193
41	1826	2048	15	2.3	K813_0490 EZ813U	4650	6043	48.99	5487/112	2800	2500	4000	113	10.0	5.0	2.0	196	180
41	2705	3220	22	1.6	K813_0490 EZ815U	4650	6043	48.99	5487/112	2800	2500	4000	176	10.0	5.0	2.0	196	193
45	1649	1850	14	2.5	K813_0440 EZ813U	4366	5458	44.25	177/4	2800	2500	4000	114	10.0	5.0	2.0	196	180
45	2443	2909	21	1.7	K813_0440 EZ815U	4366	5458	44.25	177/4	2800	2500	4000	177	10.0	5.0	2.0	196	193
50	1491	1673	14	2.8	K813_0400 EZ813U	4650	8400	40.01	12803/320	2800	2500	4000	117	10.0	5.0	2.0	196	180
50	2209	2630	21	1.9	K813_0400 EZ815U	4650	8400	40.01	12803/320	2800	2500	4000	180	10.0	5.0	2.0	196	193
55	1347	1511	14	3.0	K813_0360 EZ813U	4650	8400	36.14	2891/80	2800	2500	4000	117	10.0	5.0	2.0	196	180
55	1995	2376	21	2.0	K813_0360 EZ815U	4650	8400	36.14	2891/80	2800	2500	4000	180	10.0	5.0	2.0	196	193
62	1207	1354	14	3.2	K813_0320 EZ813U	4335	8400	32.39	31093/960	2800	2500	4000	122	10.0	5.0	2.0	196	180
62	1788	2129	21	2.2	K813_0320 EZ815U	4650	8400	32.39	31093/960	2800	2500	4000	185	10.0	5.0	2.0	196	193
68	1090	1223	14	3.4	K813_0290 EZ813U	3915	8400	29.25	7021/240	2800	2500	4000	122	10.0	5.0	2.0	196	180
68	1615	1923	21	2.3	K813_0290 EZ815U	4650	8400	29.25	7021/240	2800	2500	4000	186	10.0	5.0	2.0	196	193
78	951	1067	14	3.8	K813_0260 EZ813U	3415	8400	25.51	140833/5520	2300	2100	3500	129	10.0	5.0	2.0	196	180
78	1409	1677	21	2.5	K813_0260 EZ815U	4650	8400	25.51	140833/5520	2300	2100	3500	192	10.0	5.0	2.0	196	193
87	859	963	14	4.0	K813_0230 EZ813U	3084	8259	23.04	31801/1380	2300	2100	3500	131	10.0	5.0	2.0	196	180
87	1272	1515	21	2.7	K813_0230 EZ815U	4406	8259	23.04	31801/1380	2300	2100	3500	194	10.0	5.0	2.0	196	193
104	715	802	14	4.5	K813_0190 EZ813U	2567	6874	19.18	133517/6960	2300	2100	3500	142	10.0	5.0	2.0	196	180
104	1059	1261	21	3.1	K813_0190 EZ815U	3668	6874	19.18	133517/6960	2300	2100	3500	205	10.0	5.0	2.0	196	193
115	646	724	15	4.9	K813_0175 EZ813U	2319	6209	17.33	30149/1740	2300	2100	3500	144	10.0	5.0	2.0	196	180
115	957	1139	21	3.3	K813_0175 EZ815U	3313	6209	17.33	30149/1740	2300	2100	3500	207	10.0	5.0	2.0	196	193
122	907	1080	22	3.4	K813_0165 EZ815U	3142	5888	16.43	42067/2560	1900	1800	3000	214	10.0	5.0	2.0	196	193
135	819	976	22	3.6	K813_0150 EZ815U	2838	5318	14.84	9499/640	1900	1800	3000	217	10.0	5.0	2.0	196	193
195	567	676	22	4.7	K813_0105 EZ815U	1965	3684	10.28	53041/5160	1600	1500	2600	260	10.0	5.0	2.0	196	193
215	513	610	22	5.0	K813_0093 EZ815U	1775	3328	9.284	11977/1290	1600	1500	2600	268	10.0	5.0	2.0	196	193
K8 (n_{1N} = 3000 min^{-1}, $M_{2acc,max}$ = 4650 Nm)																		
9.6	2165	2428	5.2	1.8	K814_3110 EZ701U	4650	7637	310.9	2149075/6912	2800	2500	4000	9.2	10.0	6.0	3.0	196	166
9.6	3511	4213	8.4	1.1	K814_3110 EZ702U	4650	7637	310.9	2149075/6912	2800	2500	4000	14	10.0	6.0	3.0	196	169
11	1956	2193	5.5	1.8	K814_2810 EZ701U	4327	6898	280.8	485275/1728	2800	2500	4000	9.3	10.0	6.0	3.0	196	166
11	3171	3805	9.0	1.1	K814_2810 EZ702U	4327	6898	280.8	485275/1728	2800	2500	4000	14	10.0	6.0	3.0	196	169
12	1784	2001	5.1	2.1	K814_2560 EZ701U	4650	7073	256.2	8854189/34560	2800	2500	4000	9.3	10.0	6.0	3.0	196	166
12	2893	3472	8.2	1.3	K814_2560 EZ702U	4650	7073	256.2	8854189/34560	2800	2500	4000	15	10.0	6.0	3.0	196	169
13	1611	1807	5.4	2.1	K814_2310 EZ701U	4355	6388	231.4	1999333/8640	2800	2500	4000	9.4	10.0	6.0	3.0	196	166
13	2613	3136	8.8	1.3	K814_2310 EZ702U	4650	6388	231.4	1999333/8640	2800	2500	4000	15	10.0	6.0	3.0	196	169
16	1336	1499	4.9	2.7	K814_1920 EZ701U	3611	6043	191.9	85963/448	2800	2500	4000	9.6	10.0	6.0	3.0	196	166
16	2167	2600	8.0	1.6	K814_1920 EZ702U	4650	6043	191.9	85963/448	2800	2500	4000	15	10.0	6.0	3.0	196	169
16	2979	3756	11	1.2	K814_1920 EZ703U	4650	6043	191.9	85963/448	2800	2500	4000	23	10.0	6.0	3.0	196	171
17	1207	1354	5.3	2.7	K814_1730 EZ701U	3262	5458	173.3	2773/16	2800	2500	4000	9.6	10.0	6.0	3.0	196	166
17	1957	2348	8.6	1.6	K814_1730 EZ702U	4366	5458	173.3	2773/16	2800	2500	4000	15	10.0	6.0	3.0	196	169
17	2691	3392	12	1.2	K814_1730 EZ703U	4366	5458	173.3	2773/16	2800	2500	4000	23	10.0	6.0	3.0	196	171
19	1091	1224	4.9	3.1	K814_1570 EZ701U	2949	5377	156.7	601741/3840	2800	2500	4000	9.8	10.0	6.0	3.0	196	166
19	1769	2123	7.9	1.9	K814_1570 EZ702U	4302	5377	156.7	601741/3840	2800	2500	4000	15	10.0	6.0	3.0	196	169
19	2433	3067	11	1.4	K814_1570 EZ703U	4302	5377	156.7	601741/3840	2800	2500	4000	23	10.0	6.0	3.0	196	171
21	986	1105	5.3	3.1	K814_1420 EZ701U	2664	4856	141.5	135877/960	2800	2500	4000	9.8	10.0	6.0	3.0	196	166
21	1598	1918	8.5	1.9	K814_1420 EZ702U	3885	4856	141.5	135877/960	2800	2500	4000	15	10.0	6.0	3.0	196	169
21	2198	2770	12	1.4	K814_1420 EZ703U	3885	4856	141.5	135877/960	2800	2500	4000	23	10.0	6.0	3.0	196	171
24	883	991	4.8	3.7	K814_1270 EZ701U	2387	4895	126.9	1461371/11520	2800	2500	4000	10	10.0	6.0	3.0	196	166
24	1432	1719	7.7	2.3	K814_1270 EZ702U	3916	4895	126.9	1461371/11520	2800	2500	4000	15	10.0	6.0	3.0	196	169
24	1970	2483	11	1.6	K814_1270 EZ703U	3916	4895	126.9	1461371/11520	2800	2500	4000	23	10.0	6.0	3.0	196	171
26	798	895	5.1	3.7	K814_1150 EZ701U	2156	4421	114.6	329987/2880	2800	2500	4000	10	10.0	6.0	3.0	196	166
26	1294	1553	8.3	2.3	K814_1150 EZ702U	3537	4421	114.6	329987/2880	2800	2500	4000	15	10.0	6.0	3.0	196	169
26	1779	2243	11	1.6	K814_1150 EZ703U	3537	4421	114.6	329987/2880	2800	2500	4000	23	10.0	6.0	3.0	196	171
31	687	771	5.0	4.2	K813_0970 EZ701U	1858	3641	97.17	31093/320	2800	2500	4000	11	10.0	5.0	2.0	196	153
31	1115	1338	8.1	2.6	K813_0970 EZ702U	2913	3641	97.17	31093/320	2800	2500	4000	16	10.0	5.0	2.0	196	156
31	1533	1932	11	1.9	K813_0970 EZ703U	2913	3641	97.17	31093/320	2800	2500	4000	24	10.0	5.0	2.0	196	158
34	621	696	5.4	4.2	K813_0880 EZ701U	1678	3288	87.76	7021/80	2800	2500	4000	11	10.0	5.0	2.0	196	153
34	1007	1208	8.7	2.6	K813_0880 EZ702U	2630	3288	87.76	7021/80	2800	2500	4000	16	10.0	5.0	2.0	196	156
34	1384	1745	12	1.9	K813_0880 EZ703U	2630	3288	87.76	7021/80	2800	2500	4000	24	10.0	5.0	2.0	196	158
38	562	630	5.2	4.7	K813_0790 EZ701U	1518	3267	79.38	45725/576	2800	2500	4000	12	10.0	5.0	2.0	196	153
38	911	1093	8.5	2.9	K813_0790 EZ702U	2614	3267	79.38	45725/576	2800	2500	4000	18	10.0	5.0	2.0	196	156
38	1252	1579	12	2.1	K813_0790 EZ703U	2614	3267	79.38	45725/576	2800	2500	4000	25	10.0	5.0	2.0	196	158
38	1616	2292	9.9	2.5	K813_0790 EZ705U	4650	7637	79.38	45725/576	2800	2500	4000	38	10.0	5.0	2.0	196	163
42	507	569	5.6	4.7	K813_0720 EZ701U	1371	2951	71.70	10325/144	2800	2500	4000	12	10.0	5.0	2.0	196	153
42	823	987	9.1	2.9	K813_0720 EZ702U	2361	2951	71.70	10325/144	2800	2500	4000	18	10.0	5.0	2.0	196	156

n_{2N}	M_{2N}	$M_{2,0}$	a_{th}	S	Type	M_{2acc}	M_{2NOT}	i	i_{exakt}	n_{1maxDB}		n_{1maxZB}	J_1	$\Delta\varphi_2$	$\Delta\varphi_{2redII}$	$\Delta\varphi_{2redI}$	C_2	m
										EL1,2	EL3,4,5,6							
[rpm]	[Nm]	[Nm]				[Nm]	[Nm]			[rpm]	[rpm]	[rpm]	[kgcm²]	[arcmin]	[arcmin]	[arcmin]	[Nm/ arcmin]	[kg]
K8 (n_{1N} = 3000 min^{-1}, $M_{2acc,max}$ = 4650 Nm)																		
42	1131	1426	13	2.1	K813_0720 EZ703U	2361	2951	71.70	10325/144	2800	2500	4000	26	10.0	5.0	2.0	196	158
42	1460	2070	11	2.5	K813_0720 EZ705U	4327	6898	71.70	10325/144	2800	2500	4000	38	10.0	5.0	2.0	196	163
46	1332	1889	8.8	3.2	K813_0650 EZ705U	4650	7073	65.41	188387/2880	2800	2500	4000	39	10.0	5.0	2.0	196	163
51	1203	1706	8.7	3.4	K813_0590 EZ705U	4650	6388	59.08	42539/720	2800	2500	4000	40	10.0	5.0	2.0	196	163
61	562	674	8.9	3.8	K813_0490 EZ702U	1920	2694	48.99	5487/112	2800	2500	4000	22	10.0	5.0	2.0	196	156
61	773	974	12	2.8	K813_0490 EZ703U	2155	2694	48.99	5487/112	2800	2500	4000	30	10.0	5.0	2.0	196	158
61	998	1414	8.8	3.9	K813_0490 EZ705U	4650	6043	48.99	5487/112	2800	2500	4000	43	10.0	5.0	2.0	196	163
68	508	609	9.6	3.8	K813_0440 EZ702U	1734	2433	44.25	177/4	2800	2500	4000	23	10.0	5.0	2.0	196	156
68	698	880	13	2.8	K813_0440 EZ703U	1946	2433	44.25	177/4	2800	2500	4000	31	10.0	5.0	2.0	196	158
68	901	1278	8.8	4.2	K813_0440 EZ705U	4366	5458	44.25	177/4	2800	2500	4000	43	10.0	5.0	2.0	196	163
75	815	1155	8.8	4.5	K813_0400 EZ705U	3978	5377	40.01	12803/320	2800	2500	4000	46	10.0	5.0	2.0	196	163
83	736	1043	8.9	4.8	K813_0360 EZ705U	3593	4856	36.14	2891/80	2800	2500	4000	47	10.0	5.0	2.0	196	163
K8 (n_{1N} = 4000 min^{-1}, $M_{2acc,max}$ = 4650 Nm)																		
23	4047	7019	14	1.0	K814_1710 EZ813U	4366	5458	170.7	4779/28	2800	2500	4000	107	10.0	6.0	3.0	196	194
23	4193	10783	14	1.0	K814_1710 EZ815U	4366	5458	170.7	4779/28	2800	2500	4000	170	10.0	6.0	3.0	196	206
26	3659	6346	13	1.1	K814_1540 EZ813U	4650	8400	154.3	49383/320	2800	2500	4000	107	10.0	6.0	3.0	196	194
26	3792	9750	14	1.1	K814_1540 EZ815U	4650	8400	154.3	49383/320	2800	2500	4000	170	10.0	6.0	3.0	196	206
29	3305	5732	13	1.3	K814_1390 EZ813U	4650	8400	139.4	11151/80	2800	2500	4000	107	10.0	6.0	3.0	196	194
29	3425	8806	13	1.2	K814_1390 EZ815U	4650	8400	139.4	11151/80	2800	2500	4000	170	10.0	6.0	3.0	196	206
32	2962	5137	12	1.4	K814_1250 EZ813U	4650	8400	124.9	279837/2240	2800	2500	4000	107	10.0	6.0	3.0	196	194
32	3069	7893	13	1.4	K814_1250 EZ815U	4650	8400	124.9	279837/2240	2800	2500	4000	170	10.0	6.0	3.0	196	206
35	2676	4640	12	1.6	K814_1130 EZ813U	4650	8400	112.8	9027/80	2800	2500	4000	107	10.0	6.0	3.0	196	194
35	2772	7129	13	1.5	K814_1130 EZ815U	4650	8400	112.8	9027/80	2800	2500	4000	170	10.0	6.0	3.0	196	206
41	2334	4047	12	1.8	K814_0980 EZ813U	4650	8400	98.41	181071/1840	2800	2500	4000	108	10.0	6.0	3.0	196	194
41	2418	6217	12	1.7	K814_0980 EZ815U	4650	8400	98.41	181071/1840	2800	2500	4000	171	10.0	6.0	3.0	196	206
45	2108	3655	12	1.9	K814_0890 EZ813U	4650	8259	88.89	40887/460	2800	2500	4000	108	10.0	6.0	3.0	196	194
45	2184	5616	12	1.8	K814_0890 EZ815U	4650	8259	88.89	40887/460	2800	2500	4000	171	10.0	6.0	3.0	196	206
50	1912	3316	12	2.1	K813_0790 EZ813U	4650	7637	79.38	45725/576	2800	2500	4000	108	10.0	5.0	2.0	196	180
50	1982	5095	12	2.0	K813_0790 EZ815U	4650	7637	79.38	45725/576	2800	2500	4000	171	10.0	5.0	2.0	196	193
54	1755	3043	11	2.3	K814_0740 EZ813U	4650	6874	73.99	1201653/16240	2800	2500	4000	109	10.0	6.0	3.0	196	194
54	1818	4675	11	2.2	K814_0740 EZ815U	4650	6874	73.99	1201653/16240	2800	2500	4000	172	10.0	6.0	3.0	196	206
56	1727	2995	13	2.1	K813_0720 EZ813U	4327	6898	71.70	10325/144	2800	2500	4000	108	10.0	5.0	2.0	196	180
56	1790	4602	13	2.0	K813_0720 EZ815U	4327	6898	71.70	10325/144	2800	2500	4000	171	10.0	5.0	2.0	196	193
60	1585	2748	12	2.3	K814_0670 EZ813U	4650	6209	66.83	38763/580	2800	2500	4000	109	10.0	6.0	3.0	196	194
60	1642	4222	12	2.3	K814_0670 EZ815U	4650	6209	66.83	38763/580	2800	2500	4000	172	10.0	6.0	3.0	196	206
61	1576	2733	11	2.5	K813_0650 EZ813U	4650	7073	65.41	188387/2880	2800	2500	4000	110	10.0	5.0	2.0	196	180
61	1633	4199	12	2.4	K813_0650 EZ815U	4650	7073	65.41	188387/2880	2800	2500	4000	173	10.0	5.0	2.0	196	193
68	1423	2468	11	2.6	K813_0590 EZ813U	4650	6388	59.08	42539/720	2800	2500	4000	110	10.0	5.0	2.0	196	180
68	1475	3792	12	2.5	K813_0590 EZ815U	4650	6388	59.08	42539/720	2800	2500	4000	173	10.0	5.0	2.0	196	193
82	1180	2047	11	3.0	K813_0490 EZ813U	4650	6043	48.99	5487/112	2800	2500	4000	113	10.0	5.0	2.0	196	180
82	1223	3145	12	2.9	K813_0490 EZ815U	4650	6043	48.99	5487/112	2800	2500	4000	176	10.0	5.0	2.0	196	193
90	1066	1849	11	3.2	K813_0440 EZ813U	4366	5458	44.25	177/4	2800	2500	4000	114	10.0	5.0	2.0	196	180
90	1105	2840	12	3.1	K813_0440 EZ815U	4366	5458	44.25	177/4	2800	2500	4000	177	10.0	5.0	2.0	196	193
100	964	1671	11	3.4	K813_0400 EZ813U	4650	8400	40.01	12803/320	2800	2500	4000	117	10.0	5.0	2.0	196	180
100	999	2568	12	3.3	K813_0400 EZ815U	4650	8400	40.01	12803/320	2800	2500	4000	180	10.0	5.0	2.0	196	193
111	871	1510	12	3.7	K813_0360 EZ813U	4650	8400	36.14	2891/80	2800	2500	4000	117	10.0	5.0	2.0	196	180
111	902	2320	12	3.5	K813_0360 EZ815U	4650	8400	36.14	2891/80	2800	2500	4000	180	10.0	5.0	2.0	196	193
123	780	1353	12	3.9	K813_0320 EZ813U	4335	8400	32.39	31093/960	2800	2500	4000	122	10.0	5.0	2.0	196	180
123	808	2079	12	3.8	K813_0320 EZ815U	4650	8400	32.39	31093/960	2800	2500	4000	185	10.0	5.0	2.0	196	193
137	705	1222	12	4.2	K813_0290 EZ813U	3915	8400	29.25	7021/240	2800	2500	4000	122	10.0	5.0	2.0	196	180
137	730	1878	12	4.1	K813_0290 EZ815U	4650	8400	29.25	7021/240	2800	2500	4000	186	10.0	5.0	2.0	196	193
K9 (n_{1N} = 2000 min^{-1}, $M_{2acc,max}$ = 7700 Nm)																		
11	6925	7767	14	1.0	K914_1890 EZ813U	7700	13787	188.8	2706021/14336	2600	2500	3800	107	10.0	5.0	–	379	308
14	5384	6038	13	1.3	K914_1470 EZ813U	7700	12504	146.7	5258871/35840	2600	2500	3800	108	10.0	5.0	–	379	308
16	4545	5098	12	1.5	K914_1240 EZ813U	7700	11511	123.9	1276425/10304	2600	2500	3800	109	10.0	5.0	–	379	308
16	6732	8015	18	1.0	K914_1240 EZ815U	7700	11511	123.9	1276425/10304	2600	2500	3800	172	10.0	5.0	–	379	320
21	3556	3989	15	1.5	K913_0950 EZ813U	6450	9076	95.41	293105/3072	2600	2500	3800	111	10.0	5.0	–	379	295
21	5268	6272	23	1.0	K913_0950 EZ815U	6450	9076	95.41	293105/3072	2600	2500	3800	174	10.0	5.0	–	379	308
22	3388	3800	12	1.9	K914_0920 EZ813U	6864	8580	92.35	2399679/25984	2600	2500	3800	110	10.0	5.0	–	379	308
22	5019	5975	18	1.3	K914_0920 EZ815U	6864	8580	92.35	2399679/25984	2600	2500	3800	173	10.0	5.0	–	379	320
27	2796	3136	11	2.4	K913_0750 EZ813U	6820	8525	75.00	62403/832	2600	2500	3800	114	10.0	5.0	–	379	295
27	4141	4930	17	1.6	K913_0750 EZ815U	6820	8525	75.00	62403/832	2600	2500	3800	177	10.0	5.0	–	379	308
32	2351	2637	10	3.0	K913_0630 EZ813U	7700	14000	63.07	209901/3328	2600	2500	3800	118	10.0	5.0	–	379	295
32	3482	4146	15	2.0	K913_0630 EZ815U	7700	14000	63.07	209901/3328	2600	2500	3800	181	10.0	5.0	–	379	308

n_{2N} [rpm]	M_{2N} [Nm]	$M_{2,0}$ [Nm]	a_{th}	S	Type	M_{2acc} [Nm]	M_{2NOT} [Nm]	i	i_{exakt}	n_{1maxDB} EL1,2 [rpm]	n_{1maxDB} EL3,4,5,6 [rpm]	n_{1maxZB} [rpm]	J_1 [kgcm²]	$\Delta\varphi_2$ [arcmin]	$\Delta\varphi_{2redII}$ [arcmin]	$\Delta\varphi_{2redI}$ [arcmin]	C_2 [Nm/ arcmin]	m [kg]
K9 (n_{1N} = 2000 min^{-1}, $M_{2acc,max}$ = 7700 Nm)																		
41	1824	2046	9.6	3.8	K913_0490 EZ813U	6550	13787	48.94	100223/2048	2600	2500	3800	124	10.0	5.0	–	379	295
41	2702	3217	14	2.6	K913_0490 EZ815U	7700	13787	48.94	100223/2048	2600	2500	3800	187	10.0	5.0	–	379	308
53	1418	1590	8.9	4.9	K913_0380 EZ813U	5092	12504	38.04	194773/5120	2600	2500	3800	134	10.0	5.0	–	379	295
53	2100	2501	13	3.3	K913_0380 EZ815U	7274	12504	38.04	194773/5120	2600	2500	3800	197	10.0	5.0	–	379	308
62	1773	2111	13	3.9	K913_0320 EZ815U	6141	11511	32.12	47275/1472	2600	2500	3800	207	10.0	5.0	–	379	308
84	1322	1574	13	4.8	K913_0240 EZ815U	4578	8580	23.94	88877/3712	2200	2100	3300	228	10.0	5.0	–	379	308
K9 (n_{1N} = 3000 min^{-1}, $M_{2acc,max}$ = 6820 Nm)																		
8.0	2602	2919	4.9	1.8	K914_3740 EZ701U	6450	9076	373.7	13775935/36864	2600	2500	3800	9.4	10.0	5.0	–	379	280
8.0	4220	5064	7.9	1.1	K914_3740 EZ702U	6450	9076	373.7	13775935/36864	2600	2500	3800	15	10.0	5.0	–	379	283
10	2046	2294	4.7	2.2	K914_2940 EZ701U	5529	8525	293.8	977647/3328	2600	2500	3800	9.6	10.0	5.0	–	379	280
10	3317	3981	7.7	1.4	K914_2940 EZ702U	6820	8525	293.8	977647/3328	2600	2500	3800	15	10.0	5.0	–	379	283
12	1720	1929	4.7	2.5	K914_2470 EZ701U	4649	7164	247.0	3288449/13312	2600	2500	3800	9.9	10.0	5.0	–	379	280
12	2789	3347	7.6	1.6	K914_2470 EZ702U	5731	7164	247.0	3288449/13312	2600	2500	3800	15	10.0	5.0	–	379	283
12	3835	4835	10	1.1	K914_2470 EZ703U	5731	7164	247.0	3288449/13312	2600	2500	3800	23	10.0	5.0	–	379	285
16	1335	1497	4.6	3.1	K914_1920 EZ701U	3607	6341	191.7	4710481/24576	2600	2500	3800	10	10.0	5.0	–	379	280
16	2164	2597	7.4	1.9	K914_1920 EZ702U	5073	6341	191.7	4710481/24576	2600	2500	3800	16	10.0	5.0	–	379	283
16	2976	3752	10	1.4	K914_1920 EZ703U	5073	6341	191.7	4710481/24576	2600	2500	3800	23	10.0	5.0	–	379	285
20	1038	1164	4.5	3.8	K914_1490 EZ701U	2804	5750	149.0	9154331/61440	2600	2500	3800	11	10.0	5.0	–	379	280
20	1682	2019	7.3	2.3	K914_1490 EZ702U	4600	5750	149.0	9154331/61440	2600	2500	3800	16	10.0	5.0	–	379	283
20	2313	2916	10	1.7	K914_1490 EZ703U	4600	5750	149.0	9154331/61440	2600	2500	3800	24	10.0	5.0	–	379	285
24	876	982	4.4	4.3	K914_1260 EZ701U	2367	4854	125.8	2221925/17664	2600	2500	3800	12	10.0	5.0	–	379	280
24	1420	1704	7.2	2.6	K914_1260 EZ702U	3883	4854	125.8	2221925/17664	2600	2500	3800	17	10.0	5.0	–	379	283
24	1953	2462	9.9	1.9	K914_1260 EZ703U	3883	4854	125.8	2221925/17664	2600	2500	3800	25	10.0	5.0	–	379	285
32	1059	1271	8.6	2.7	K914_0940 EZ702U	2895	3619	93.78	4177219/44544	2600	2500	3800	18	10.0	5.0	–	379	283
32	1456	1835	12	2.0	K914_0940 EZ703U	2895	3619	93.78	4177219/44544	2600	2500	3800	26	10.0	5.0	–	379	285
K10 (n_{1N} = 2000 min^{-1}, $M_{2acc,max}$ = 12750 Nm)																		
8.4	8711	9770	12	1.1	K1014_2370 EZ813U	12750	15937	237.4	49383/208	2500	2300	3500	108	10.0	5.0	–	725	517
13	5463	6127	12	1.6	K1014_1490 EZ813U	10621	13276	148.9	30969/208	2500	2300	3500	111	10.0	5.0	–	725	517
13	8091	9634	17	1.1	K1014_1490 EZ815U	10621	13276	148.9	30969/208	2500	2300	3500	174	10.0	5.0	–	725	529

16.3 Dimensional drawings

In this chapter you can find the dimensions of the geared motors.

There is a dimensional drawing for every possible shaft/housing design, each with the tables for gearbox dimensions, motor dimensions and geared motor dimensions.

Dimensions can exceed the specifications of ISO 2768-mK due to casting tolerances or accumulation of individual tolerances.

We reserve the right to make dimensional changes due to ongoing technical development.

You can download 3D models of our standard drives at https://configurator.stoeber.de/en-US/.

Combination options and the dimensions of forced ventilated geared motors can also be found at https://configurator.stoeber.de/en-US/.

Tolerances

Axis height in accordance with DIN 747	Tolerance
Up to 50 mm	-0.4 mm
Up to 250 mm	-0.5 mm
Up to 630 mm	-0.6 mm

Solid shaft	Tolerance
Shaft ∅ fit ≤ 50 mm	DIN 748-1, ISO k6
Shaft ∅ fit > 50 mm	DIN 748-1, ISO m6
Feather keys	DIN 6885-1, high form A

Hollow shaft	Tolerance
Hollow shaft hole fit	ISO H7
Feather keys	DIN 6885-1, high form K1 ∅30: DIN 6885-3, low form

Flange	Pilot tolerance
Up to 300 mm	ISO j6
Starting at 350 mm	ISO h6

Centering holes in solid shafts in accordance with DIN 332-2, DR shape

Thread size	M4	M5	M6	M8	M10	M12	M16	M20	M24
Thread depth [mm]	10	12.5	16	19	22	28	36	42	50

16.3.1 A shaft design (hollow shaft), G housing design (pitch circle diameter)

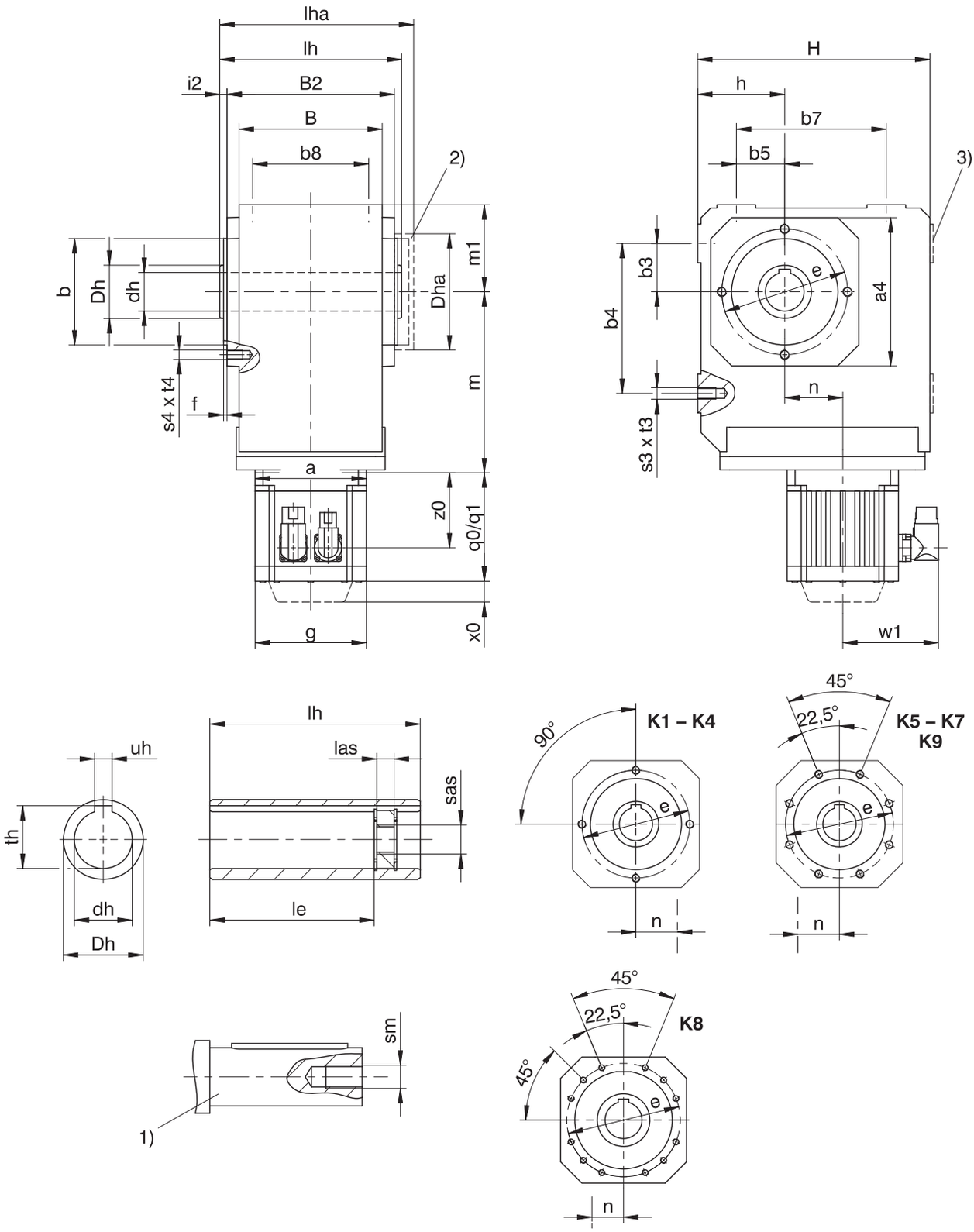

q0	Applies to motors without brake.	q1	Applies to motors with brake.
x0	Applies to encoders using an optical measuring method	w1	Different for the One Cable Solution (OCS), see the chapter [▶ 17.4]
1)	The length of the machine shaft must be at least 2.2 x ∅dh and the length of the feather key must be at least 2 x ∅dh.	2)	Cover (optional)
3)	Only for K1 (other sizes on request)		

Dimensions of gearboxes

Type	□a4	Øb	b3	b4	b5	b7	b8	B	B2	Ødh	ØDh	Dha	Øe	f	h	H	i2	le	lh	las	lha	m1	s3	s4	sm	sas	t3	t4	th	uh
K1	105	75_{j6}	30	90	30	90	70	90	106	20^{H7}	40	□105	90	3.0	60	160	7.0	98.0	120	12	127.0	60	M8	M8	M6	M8	13	13	22.8	6^{JS9}
K1	105	75_{j6}	30	90	30	90	70	90	106	25^{H7}	40	□105	90	3.0	60	160	7.0	98.0	120	12	127.0	60	M8	M8	M10	M12	13	13	28.3	8^{JS9}
K1	105	75_{j6}	30	90	30	90	70	90	106	30^{H7}	40	□105	90	3.0	60	160	7.0	93.5	120	12	127.0	60	M8	M8	M10	M12	13	13	32.0	8^{JS9}
K2	116	82_{j6}	35	115	35	115	90	115	134	30^{H7}	45	□116	100	3.0	65	190	7.0	121.5	148	12	156.0	65	M10	M8	M10	M12	16	13	33.3	8^{JS9}
K3	132	95_{j6}	40	130	40	130	105	130	146	35^{H7}	50	□132	115	3.0	75	213	7.0	125.0	160	12	168.0	75	M10	M8	M12	M16	16	13	38.3	10^{JS9}
K4	152	110_{j6}	50	155	50	155	120	148	173	40^{H7}	55	□152	130	3.5	90	240	7.5	157.0	188	12	197.5	90	M12	M10	M16	M20	19	16	43.3	12^{JS9}
K5	145	110_{j6}	40	140	100	140	125	160	185	50^{H7}	65	□145	130	3.5	160	260	7.5	164.0	200	12	209.5	100	M16	M10	M16	M20	26	16	53.8	14^{JS9}
K6	180	140_{j6}	50	160	110	160	130	168	200	50^{H7}	70	∅183	165	3.5	190	310	7.5	179.0	215	12	224.5	120	M16	M10	M16	M20	26	16	53.8	14^{JS9}
K7	195	155_{j6}	55	180	125	180	145	190	226	60^{H7}	85	∅205	185	3.5	212	342	8.0	214.0	242	12	252.0	125	M20	M12	M20	M24	33	19	64.4	18^{JS9}
K8	226	185_{j6}	75	240	165	240	185	235	282	70^{H7}	100	∅184	215	4.0	265	410	9.0	263.0	300	20	311.0	145	M24	M12	M20	M24	38	19	74.9	20^{JS9}
K9	280	230_{j6}	95	280	185	280	225	285	330	90^{H7}	120	∅230	265	5.0	315	495	10.0	302.0	350	26	361.0	180	M30	M16	M24	M30	48	26	95.4	25^{JS9}

Dimensions of motors

Type	□g	q0	q1	w1	x0	z0
EZ301U	72	114.0	154.0	55.5	21	78.5
EZ302U	72	136.0	176.0	55.5	21	100.5
EZ303U	72	158.0	198.0	55.5	21	122.5
EZ401U	98	118.5	167.0	91.0	22	76.5
EZ402U	98	143.5	192.0	91.0	22	101.5
EZ404U	98	193.5	242.0	91.0	22	151.5
EZ501U	115	112.0	166.5	100.0	22	77.5
EZ502U	115	137.0	191.5	100.0	22	102.5
EZ503U	115	162.0	216.5	100.0	22	127.5
EZ505U	115	212.0	266.5	100.0	22	177.5
EZ701U	145	125.0	184.0	115.0	22	87.0
EZ702U	145	150.0	209.0	115.0	22	112.0
EZ703U	145	175.0	234.0	115.0	22	137.0
EZ705U	145	230.0	289.0	134.0	22	188.0
EZ813U	190	273.5	350.5	156.5	22	219.5
EZ815U	190	355.5	432.5	156.5	22	301.5

Dimensions of geared motors

Type	EZ3			EZ4			EZ5			EZ7			EZ8		
	a	m	n	a	m	n	a	m	n	a	m	n	a	m	n
K102	□72	124	36.0	□98	124	36.0	□115	128	36.0	□145	130	36.0	–	–	–
K202	□72	143	46.0	□98	143	46.0	□115	147	46.0	□145	149	46.0	–	–	–
K203	∅140	180	46.0	∅140	180	46.0	–	–	–	–	–	–	–	–	–
K302	∅140	163	52.5	∅140	163	52.5	□115	167	52.5	□145	169	52.5	–	–	–
K303	∅140	200	52.5	∅140	200	52.5	∅160	210	16.0	–	–	–	–	–	–
K402	–	–	–	–	–	–	∅160	187	60.0	□145	189	60.0	□190	192	60.0
K403	∅140	220	60.0	∅140	220	60.0	∅160	230	23.0	–	–	–	–	–	–
K513	–	–	–	–	–	–	∅160	172	15.0	□145	174	15.0	□190	177	15.0
K514	–	–	–	–	–	–	∅160	215	15.0	–	–	–	–	–	–
K613	–	–	–	–	–	–	∅160	191	18.0	∅200	193	18.0	□190	196	18.0
K614	–	–	–	–	–	–	∅160	234	18.0	–	–	–	–	–	–
K713	–	–	–	–	–	–	–	–	–	∅200	221	20.0	□190	224	20.0
K714	–	–	–	–	–	–	∅160	263	20.0	∅200	283	20.0	–	–	–
K813	–	–	–	–	–	–	–	–	–	∅200	247	24.0	∅250	249	24.0
K814	–	–	–	–	–	–	–	–	–	∅200	308	24.0	∅250	320	5.0
K913	–	–	–	–	–	–	–	–	–	–	–	–	∅250	294	25.0
K914	–	–	–	–	–	–	–	–	–	∅200	353	25.0	∅250	365	25.0

16.3.2 A shaft design (hollow shaft), NG housing design (base + pitch circle diameter)

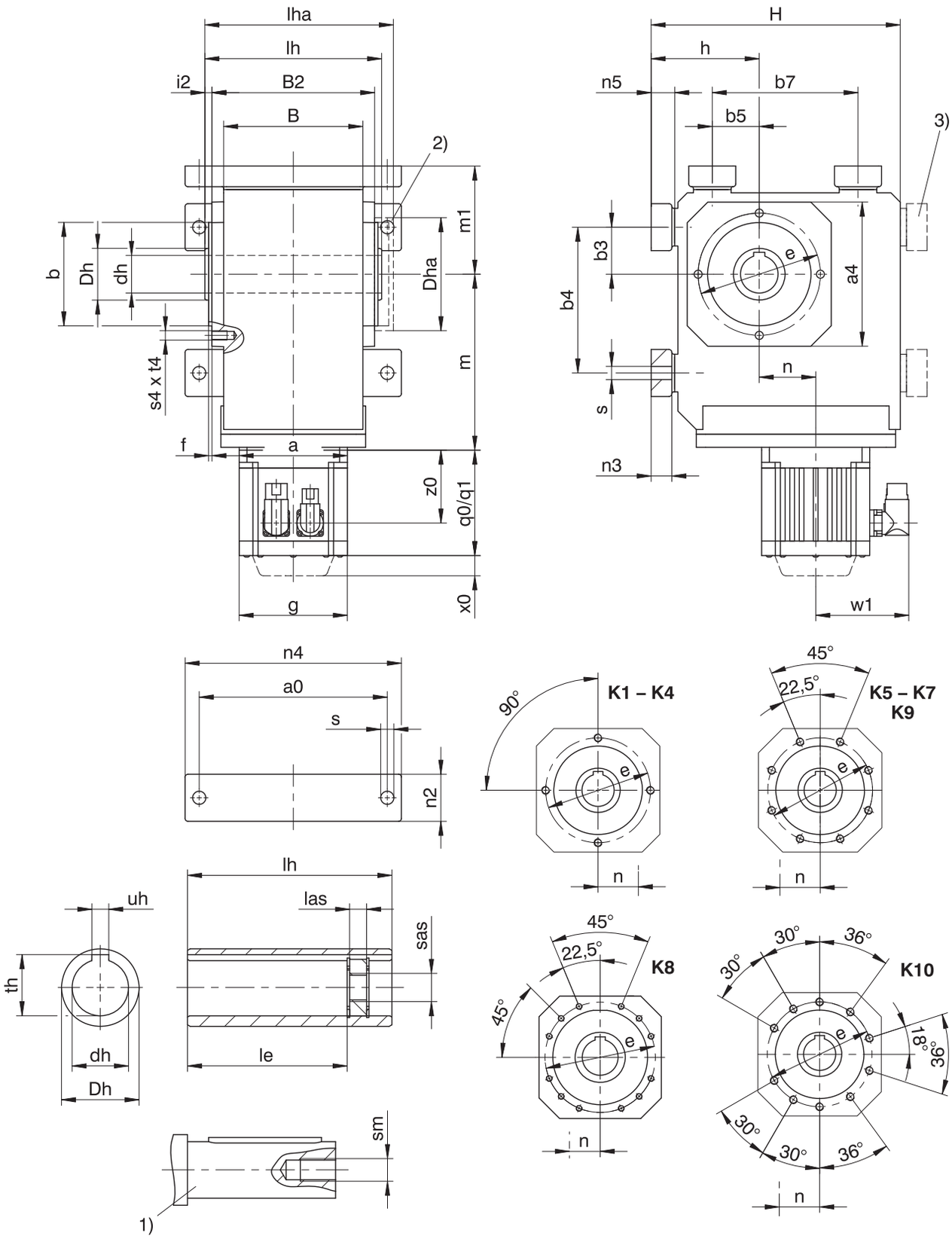

q0	Applies to motors without brake.	q1	Applies to motors with brake.
x0	Applies to encoders using an optical measuring method	w1	Different for the One Cable Solution (OCS), see the chapter [▶ 17.4]
1)	The length of the machine shaft must be at least 2.2 x ∅dh and the length of the feather key must be at least 2 x ∅dh.	2)	Cover (optional)
3)	Only for K1 (other sizes on request)		

Dimensions of gearboxes

Type	a0	□a4	Øb	b3	b4	b5	b7	B	B2	Ødh	ØDh	Dha	Øe	f	h	H	i2	le	lh	las	lha	m1	n2	n3	n4	n5	Øs	s4	sm	sas	t4	th	uh
K1	115	105	75_{j6}	30	90	30	90	90	106	20^{H7}	40	□105	90	3.0	75	175	7.0	98.0	120	12	127.0	75	30	13	140	15	9.0	M8	M6	M8	13	22.8	6^{JS9}
K1	115	105	75_{j6}	30	90	30	90	90	106	25^{H7}	40	□105	90	3.0	75	175	7.0	98.0	120	12	127.0	75	30	13	140	15	9.0	M8	M10	M12	13	28.3	8^{JS9}
K1	115	105	75_{j6}	30	90	30	90	90	106	30^{H7}	40	□105	90	3.0	75	175	7.0	93.5	120	12	127.0	75	30	13	140	15	9.0	M8	M10	M12	13	32.0	8^{JS9}
K2	155	116	82_{j6}	35	115	35	115	115	134	30^{H7}	45	□116	100	3.0	88	213	7.0	121.5	148	12	156.0	88	40	20	185	23	11.0	M8	M10	M12	13	33.3	8^{JS9}
K3	170	132	95_{j6}	40	130	40	130	130	146	35^{H7}	50	□132	115	3.0	98	236	7.0	125.0	160	12	168.0	98	45	20	200	23	11.0	M8	M12	M16	13	38.3	10^{JS9}
K4	200	152	110_{j6}	50	155	50	155	148	173	40^{H7}	55	□152	130	3.5	115	265	7.5	157.0	188	12	197.5	115	50	22	230	25	14.0	M10	M16	M20	16	43.3	12^{JS9}
K5	200	145	110_{j6}	40	140	100	140	160	185	50^{H7}	65	□145	130	3.5	190	290	7.5	164.0	200	12	209.5	130	60	27	240	30	18.0	M10	M16	M20	16	53.8	14^{JS9}
K6	210	180	140_{j6}	50	160	110	160	168	200	50^{H7}	70	∅183	165	3.5	220	340	7.5	179.0	215	12	224.5	150	65	27	250	30	18.5	M10	M16	M20	16	53.8	14^{JS9}
K7	241	195	155_{j6}	55	180	125	180	190	226	60^{H7}	85	∅205	185	3.5	250	380	8.0	214.0	242	12	252.0	163	70	35	290	38	23.0	M12	M20	M24	19	64.4	18^{JS9}
K8	300	226	185_{j6}	75	240	165	240	235	282	70^{H7}	100	∅184	215	4.0	310	455	9.0	263.0	300	20	311.0	190	85	41	360	45	27.0	M12	M20	M24	19	74.9	20^{JS9}
K9	360	280	230_{j6}	95	280	185	280	285	330	90^{H7}	120	∅230	265	5.0	365	545	10.0	302.0	350	26	361.0	230	95	46	430	50	31.0	M16	M24	M30	26	95.4	25^{JS9}
K10	330	340	250_{h6}	115	350	265	420	400	356	100^{H7}	130	∅200	300	20.0	420	636	27.0	361.0	410	26	441.0	270	120	–	400	45	39.0	M20	M24	M30	33	106.4	28^{JS9}

Dimensions of motors

Type	□g	q0	q1	w1	x0	z0
EZ301U	72	114.0	154.0	55.5	21	78.5
EZ302U	72	136.0	176.0	55.5	21	100.5
EZ303U	72	158.0	198.0	55.5	21	122.5
EZ401U	98	118.5	167.0	91.0	22	76.5
EZ402U	98	143.5	192.0	91.0	22	101.5
EZ404U	98	193.5	242.0	91.0	22	151.5
EZ501U	115	112.0	166.5	100.0	22	77.5
EZ502U	115	137.0	191.5	100.0	22	102.5
EZ503U	115	162.0	216.5	100.0	22	127.5
EZ505U	115	212.0	266.5	100.0	22	177.5
EZ701U	145	125.0	184.0	115.0	22	87.0
EZ702U	145	150.0	209.0	115.0	22	112.0
EZ703U	145	175.0	234.0	115.0	22	137.0
EZ705U	145	230.0	289.0	134.0	22	188.0
EZ813U	190	273.5	350.5	156.5	22	219.5
EZ815U	190	355.5	432.5	156.5	22	301.5

Dimensions of geared motors

Type	EZ3			EZ4			EZ5			EZ7			EZ8		
	a	m	n	a	m	n	a	m	n	a	m	n	a	m	n
K102	□72	124	36.0	□98	124	36.0	□115	128	36.0	□145	130	36.0	–	–	–
K202	□72	143	46.0	□98	143	46.0	□115	147	46.0	□145	149	46.0	–	–	–
K203	∅140	180	46.0	∅140	180	46.0	–	–	–	–	–	–	–	–	–
K302	∅140	163	52.5	∅140	163	52.5	□115	167	52.5	□145	169	52.5	–	–	–
K303	∅140	200	52.5	∅140	200	52.5	∅160	210	16.0	–	–	–	–	–	–
K402	–	–	–	–	–	–	∅160	187	60.0	□145	189	60.0	□190	192	60.0
K403	∅140	220	60.0	∅140	220	60.0	∅160	230	23.0	–	–	–	–	–	–
K513	–	–	–	–	–	–	∅160	172	15.0	□145	174	15.0	□190	177	15.0
K514	–	–	–	–	–	–	∅160	215	15.0	–	–	–	–	–	–
K613	–	–	–	–	–	–	∅160	191	18.0	∅200	193	18.0	□190	196	18.0
K614	–	–	–	–	–	–	∅160	234	18.0	–	–	–	–	–	–
K713	–	–	–	–	–	–	–	–	–	∅200	221	20.0	□190	224	20.0
K714	–	–	–	–	–	–	∅160	263	20.0	∅200	283	20.0	–	–	–
K813	–	–	–	–	–	–	–	–	–	∅200	247	24.0	∅250	249	24.0
K814	–	–	–	–	–	–	–	–	–	∅200	308	24.0	∅250	320	5.0
K913	–	–	–	–	–	–	–	–	–	–	–	–	∅250	294	25.0
K914	–	–	–	–	–	–	–	–	–	∅200	353	25.0	∅250	365	25.0
K1014	–	–	–	–	–	–	–	–	–	–	–	–	∅250	450	28.0

16.3.3 A shaft design (hollow shaft), GD housing design (pitch circle diameter + torque arm bracket)

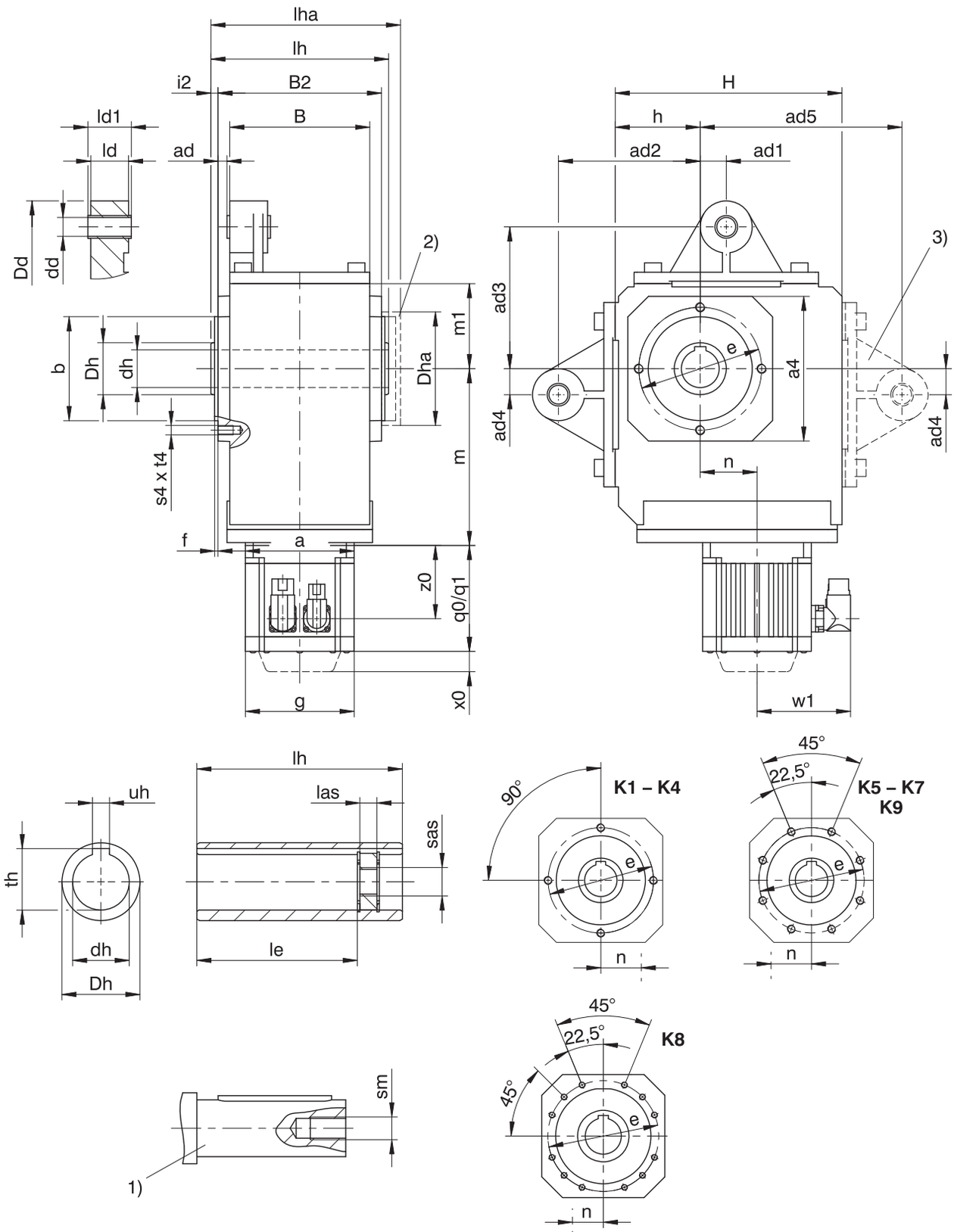

q0	Applies to motors without brake.	q1	Applies to motors with brake.
x0	Applies to encoders using an optical measuring method	w1	Different for the One Cable Solution (OCS), see the chapter [▶ 17.4]
1)	The length of the machine shaft must be at least 2.2 x ∅dh and the length of the feather key must be at least 2 x ∅dh.	2)	Cover (optional)

3) Only for K1 (other sizes on request)

– If you brace the gearboxes without the torque arm brackets provided by the manufacturer for this purpose, the dimensions for ad2 and ad3 must meet the specified value.

Dimensions of gearboxes

Type	□a4	ad	ad1	ad2	ad3	ad4	ad5	Øb	B	B2	Ødd	Ødh	ØDd	ØDh	Dha	Øe	f
K1	105	6.0	15.0	90	90	15.0	130	75_{j6}	90	106	12^{H9}	20^{H7}	43	40	□105	90	3.0
K1	105	6.0	15.0	90	90	15.0	130	75_{j6}	90	106	12^{H9}	25^{H7}	43	40	□105	90	3.0
K1	105	6.0	15.0	90	90	15.0	130	75_{j6}	90	106	12^{H9}	30^{H7}	43	40	□105	90	3.0
K2	116	6.5	22.5	100	100	22.5	–	82_{j6}	115	134	16^{H9}	30^{H7}	45	45	□116	100	3.0
K3	132	5.0	25.0	120	120	25.0	–	95_{j6}	130	146	16^{H9}	35^{H7}	45	50	□132	115	3.0
K4	152	9.5	27.5	150	150	27.5	–	110_{j6}	148	173	20^{H9}	40^{H7}	55	55	□152	130	3.5
K5	145	9.5	30.0	250	190	30.0	–	110_{j6}	160	185	20^{H9}	50^{H7}	58	65	□145	130	3.5
K6	180	13.0	30.0	250	180	30.0	–	140_{j6}	168	200	20^{H9}	50^{H7}	58	70	∅183	165	3.5
K7	195	15.0	35.0	300	213	35.0	–	155_{j6}	190	226	20^{H9}	60^{H7}	68	85	∅205	185	3.5
K8	226	17.0	45.0	350	230	45.0	–	185_{j6}	235	282	24^{H9}	70^{H7}	72	100	∅184	215	4.0
K9	280	16.0	45.0	450	315	45.0	–	230_{j6}	285	330	24^{H9}	90^{H7}	75	120	∅230	265	5.0

Dimensions of gearboxes

Type	h	H	i2	ld	ld1	le	lh	las	lha	m1	s4	sm	sas	t4	th	uh
K1	60	160	7.0	24	28	98.0	120	12	127.0	60	M8	M6	M8	13	22.8	6^{JS9}
K1	60	160	7.0	24	28	98.0	120	12	127.0	60	M8	M10	M12	13	28.3	8^{JS9}
K1	60	160	7.0	24	28	93.5	120	12	127.0	60	M8	M10	M12	13	32.0	8^{JS9}
K2	65	190	7.0	32	38	121.5	148	12	156.0	65	M8	M10	M12	13	33.3	8^{JS9}
K3	75	213	7.0	32	38	125.0	160	12	168.0	75	M8	M12	M16	13	38.3	10^{JS9}
K4	90	240	7.5	40	46	157.0	188	12	197.5	90	M10	M16	M20	16	43.3	12^{JS9}
K5	160	260	7.5	40	46	164.0	200	12	209.5	100	M10	M16	M20	16	53.8	14^{JS9}
K6	190	310	7.5	40	46	179.0	215	12	224.5	120	M10	M16	M20	16	53.8	14^{JS9}
K7	212	342	8.0	64	70	214.0	242	12	252.0	125	M12	M20	M24	19	64.4	18^{JS9}
K8	265	410	9.0	102	115	263.0	300	20	311.0	145	M12	M20	M24	19	74.9	20^{JS9}
K9	315	495	10.0	102	115	302.0	350	26	361.0	180	M16	M24	M30	26	95.4	25^{JS9}

Dimensions of motors

Type	□g	q0	q1	w1	x0	z0
EZ301U	72	114.0	154.0	55.5	21	78.5
EZ302U	72	136.0	176.0	55.5	21	100.5
EZ303U	72	158.0	198.0	55.5	21	122.5
EZ401U	98	118.5	167.0	91.0	22	76.5
EZ402U	98	143.5	192.0	91.0	22	101.5
EZ404U	98	193.5	242.0	91.0	22	151.5
EZ501U	115	112.0	166.5	100.0	22	77.5
EZ502U	115	137.0	191.5	100.0	22	102.5
EZ503U	115	162.0	216.5	100.0	22	127.5
EZ505U	115	212.0	266.5	100.0	22	177.5
EZ701U	145	125.0	184.0	115.0	22	87.0
EZ702U	145	150.0	209.0	115.0	22	112.0
EZ703U	145	175.0	234.0	115.0	22	137.0
EZ705U	145	230.0	289.0	134.0	22	188.0
EZ813U	190	273.5	350.5	156.5	22	219.5
EZ815U	190	355.5	432.5	156.5	22	301.5

The dimensions a, m and n can be found on the next page.

Dimensions of geared motors

Type	EZ3			EZ4			EZ5			EZ7			EZ8		
	a	m	n	a	m	n	a	m	n	a	m	n	a	m	n
K102	□72	124	36.0	□98	124	36.0	□115	128	36.0	□145	130	36.0	–	–	–
K202	□72	143	46.0	□98	143	46.0	□115	147	46.0	□145	149	46.0	–	–	–
K203	∅140	180	46.0	∅140	180	46.0	–	–	–	–	–	–	–	–	–
K302	∅140	163	52.5	∅140	163	52.5	□115	167	52.5	□145	169	52.5	–	–	–
K303	∅140	200	52.5	∅140	200	52.5	∅160	210	16.0	–	–	–	–	–	–
K402	–	–	–	–	–	–	∅160	187	60.0	□145	189	60.0	□190	192	60.0
K403	∅140	220	60.0	∅140	220	60.0	∅160	230	23.0	–	–	–	–	–	–
K513	–	–	–	–	–	–	∅160	172	15.0	□145	174	15.0	□190	177	15.0
K514	–	–	–	–	–	–	∅160	215	15.0	–	–	–	–	–	–
K613	–	–	–	–	–	–	∅160	191	18.0	∅200	193	18.0	□190	196	18.0
K614	–	–	–	–	–	–	∅160	234	18.0	–	–	–	–	–	–
K713	–	–	–	–	–	–	–	–	–	∅200	221	20.0	□190	224	20.0
K714	–	–	–	–	–	–	∅160	263	20.0	∅200	283	20.0	–	–	–
K813	–	–	–	–	–	–	–	–	–	∅200	247	24.0	∅250	249	24.0
K814	–	–	–	–	–	–	–	–	–	∅200	308	24.0	∅250	320	5.0
K913	–	–	–	–	–	–	–	–	–	–	–	–	∅250	294	25.0
K914	–	–	–	–	–	–	–	–	–	∅200	353	25.0	∅250	365	25.0

16.3.4 A shaft design (hollow shaft), NGD housing design (foot + pitch circle diameter + torque arm bracket)

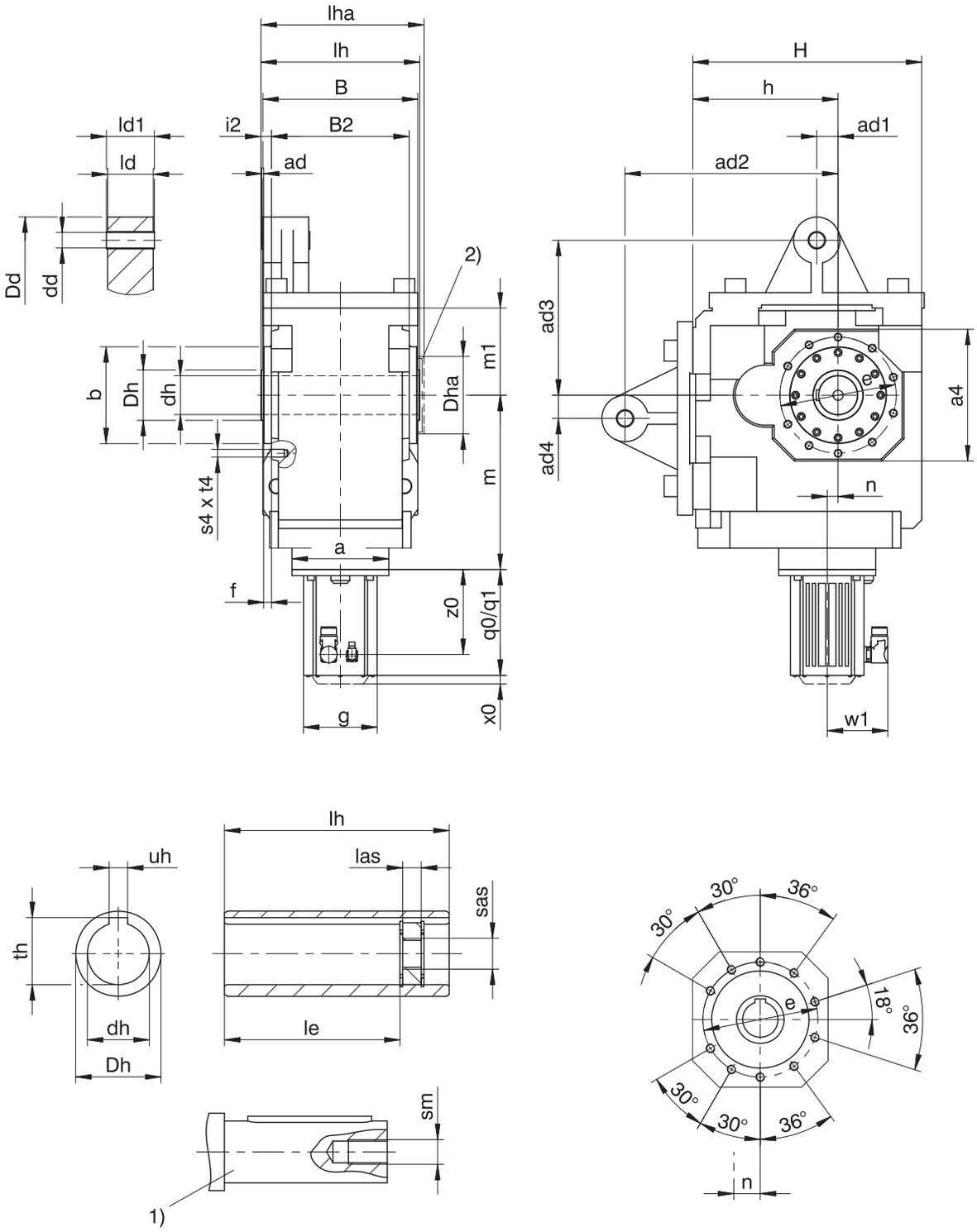

q0	Applies to motors without brake.	q1	Applies to motors with brake.
x0	Applies to encoders using an optical measuring method.	w1	Different for the One Cable Solution (OCS), see the chapter [▷ 17.4]
1)	The length of the machine shaft must be at least 2.2 x ∅dh and the length of the feather key must be at least 2 x ∅dh.	2)	Cover (optional)
–	If you brace the gearboxes without the torque arm brackets provided by the manufacturer for this purpose, the dimensions for ad2 and ad3 must meet the specified value.		

Dimensions of gearboxes

Type	□a4	ad	ad1	ad2	ad3	ad4	Øb	B	B2	Ødd	Ødh	ØDd	ØDh	Dha	Øe	f
K10	340	5	60	550	400	55	250_{h6}	400	356	40^{H9}	100^{H7}	120	130	∅200	300	20

Dimensions of gearboxes

Type	h	H	i2	ld	ld1	le	lh	las	lha	m1	s4	sm	sas	t4	th	uh
K10	375	591	27	118	124	361	410	26	441	225	M20	M24	M30	33	106.4	28^{JS9}

Dimensions of motors

Type	□g	q0	q1	w1	x0	z0
EZ813U	190	273.5	350.5	156.5	22	219.5
EZ815U	190	355.5	432.5	156.5	22	301.5

Dimensions of geared motors

Type	EZ8		
	a	m	n
K1014	∅250	450	28.0

16.3.5 A shaft design (hollow shaft), F housing design (round flange)

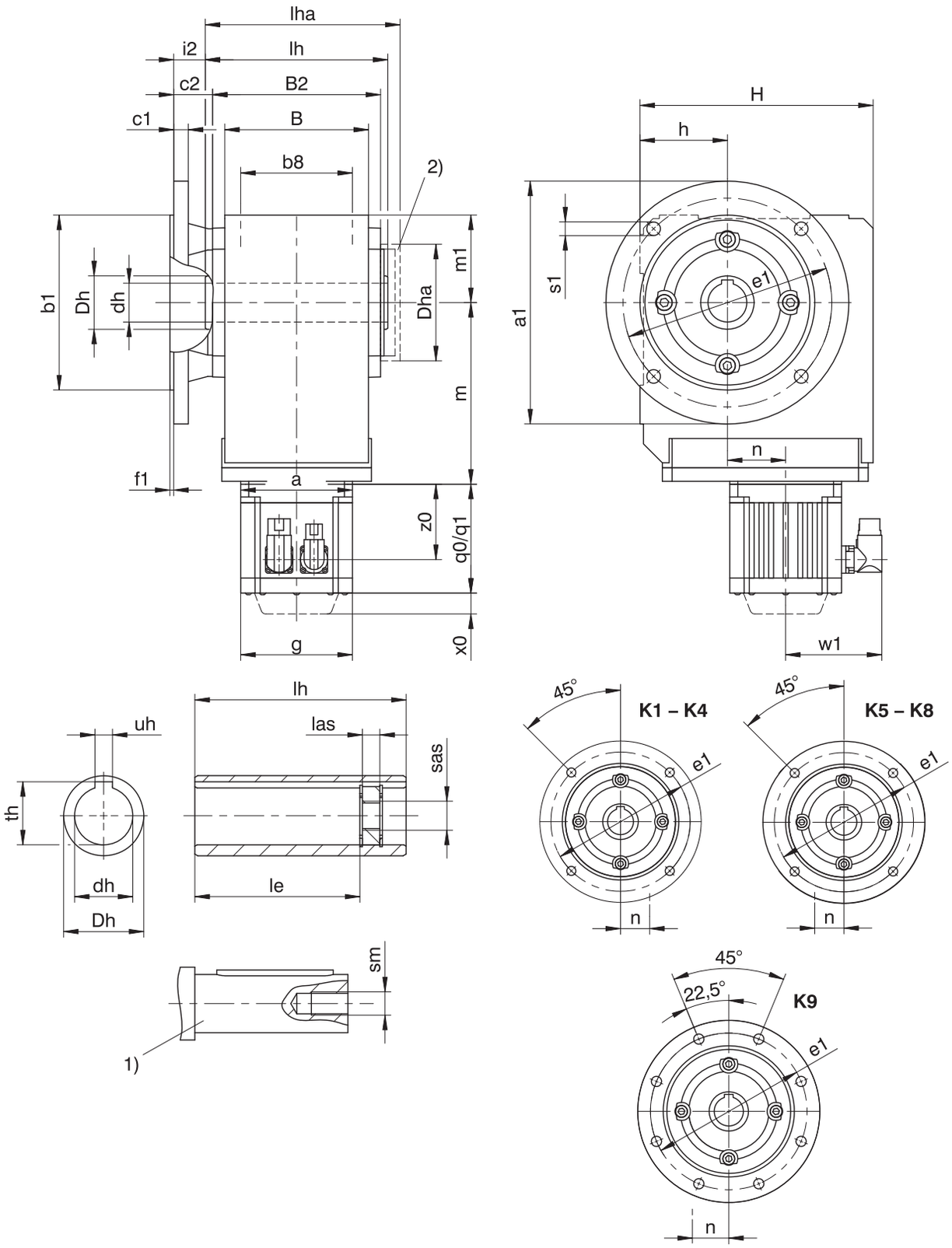

q0	Applies to motors without brake.	q1	Applies to motors with brake.
x0	Applies to encoders using an optical measuring method	w1	Different for the One Cable Solution (OCS), see the chapter [▶ 17.4]
1)	The length of the machine shaft must be at least 2.2 x ∅dh and the length of the feather key must be at least 2 x ∅dh.	2)	Cover (optional)

Dimensions of gearboxes

Type	Øa1	Øb1	b8	B	B2	c1	c2	Ødh	ØDh	Dha	Øe1	f1	h	H	i2	le	lh	las	lha	m1	Øs1	sm	sas	th	uh
K1	160	110_{j6}	70	90	106	10	32.0	20^{H7}	40	□105	130	3.5	60	160	25.0	98.0	120	12	127.0	60	9	M6	M8	22.8	6^{JS9}
K1	160	110_{j6}	70	90	106	10	32.0	25^{H7}	40	□105	130	3.5	60	160	25.0	98.0	120	12	127.0	60	9	M10	M12	28.3	8^{JS9}
K1	160	110_{j6}	70	90	106	10	32.0	30^{H7}	40	□105	130	3.5	60	160	25.0	93.5	120	12	127.0	60	9	M10	M12	32.0	8^{JS9}
K2	200	130_{j6}	90	115	134	12	32.0	30^{H7}	45	□116	165	3.5	65	190	25.0	121.5	148	12	156.0	65	11	M10	M12	33.3	8^{JS9}
K3	200	130_{j6}	105	130	146	14	38.0	35^{H7}	50	□132	165	3.5	75	213	31.0	125.0	160	12	168.0	75	11	M12	M16	38.3	10^{JS9}
K4	250	180_{j6}	120	148	173	15	40.0	40^{H7}	55	□152	215	4.0	90	240	32.5	157.0	188	12	197.5	90	14	M16	M20	43.3	12^{JS9}
K5	250	180_{j6}	125	160	185	15	39.5	50^{H7}	65	□145	215	4.0	160	260	32.0	164.0	200	12	209.5	100	14	M16	M20	53.8	14^{JS9}
K6	300	230_{j6}	130	168	200	17	36.0	50^{H7}	70	∅183	265	4.0	190	310	28.5	179.0	215	12	224.5	120	14	M16	M20	53.8	14^{JS9}
K7	350	250_{h6}	145	190	226	18	44.0	60^{H7}	85	∅205	300	5.0	212	342	36.0	214.0	242	12	252.0	125	18	M20	M24	64.4	18^{JS9}
K8	400	300_{h6}	185	235	282	20	45.0	70^{H7}	100	∅184	350	5.0	265	410	36.0	263.0	300	20	311.0	145	18	M20	M24	74.9	20^{JS9}
K9	450	350_{h6}	225	285	330	23	50.0	90^{H7}	120	∅230	400	5.0	315	495	40.0	302.0	350	26	361.0	180	18	M24	M30	95.4	25^{JS9}

Dimensions of additional round flanges

Type	Øa1	Øb1	c1	Øe1	f1	Øs1
K1	140	95_{j6}	10	115	3.0	9
K2	160	110_{j6}	12	130	3.5	9
K3	160	110_{j6}	14	130	3.5	9
K3	250	180_{j6}	14	215	4.0	14
K8	350	250_{h6}	18	300	5.0	18
K8	450	350_{h6}	20	400	5.0	18

Dimensions of motors

Type	□g	q0	q1	w1	x0	z0
EZ301U	72	114.0	154.0	55.5	21	78.5
EZ302U	72	136.0	176.0	55.5	21	100.5
EZ303U	72	158.0	198.0	55.5	21	122.5
EZ401U	98	118.5	167.0	91.0	22	76.5
EZ402U	98	143.5	192.0	91.0	22	101.5
EZ404U	98	193.5	242.0	91.0	22	151.5
EZ501U	115	112.0	166.5	100.0	22	77.5
EZ502U	115	137.0	191.5	100.0	22	102.5
EZ503U	115	162.0	216.5	100.0	22	127.5
EZ505U	115	212.0	266.5	100.0	22	177.5
EZ701U	145	125.0	184.0	115.0	22	87.0
EZ702U	145	150.0	209.0	115.0	22	112.0
EZ703U	145	175.0	234.0	115.0	22	137.0
EZ705U	145	230.0	289.0	134.0	22	188.0
EZ813U	190	273.5	350.5	156.5	22	219.5
EZ815U	190	355.5	432.5	156.5	22	301.5

The dimensions a, m and n can be found on the next page.

Dimensions of geared motors

Type	EZ3			EZ4			EZ5			EZ7			EZ8		
	a	m	n	a	m	n	a	m	n	a	m	n	a	m	n
K102	□72	124	36.0	□98	124	36.0	□115	128	36.0	□145	130	36.0	–	–	–
K202	□72	143	46.0	□98	143	46.0	□115	147	46.0	□145	149	46.0	–	–	–
K203	∅140	180	46.0	∅140	180	46.0	–	–	–	–	–	–	–	–	–
K302	∅140	163	52.5	∅140	163	52.5	□115	167	52.5	□145	169	52.5	–	–	–
K303	∅140	200	52.5	∅140	200	52.5	∅160	210	16.0	–	–	–	–	–	–
K402	–	–	–	–	–	–	∅160	187	60.0	□145	189	60.0	□190	192	60.0
K403	∅140	220	60.0	∅140	220	60.0	∅160	230	23.0	–	–	–	–	–	–
K513	–	–	–	–	–	–	∅160	172	15.0	□145	174	15.0	□190	177	15.0
K514	–	–	–	–	–	–	∅160	215	15.0	–	–	–	–	–	–
K613	–	–	–	–	–	–	∅160	191	18.0	∅200	193	18.0	□190	196	18.0
K614	–	–	–	–	–	–	∅160	234	18.0	–	–	–	–	–	–
K713	–	–	–	–	–	–	–	–	–	∅200	221	20.0	□190	224	20.0
K714	–	–	–	–	–	–	∅160	263	20.0	∅200	283	20.0	–	–	–
K813	–	–	–	–	–	–	–	–	–	∅200	247	24.0	∅250	249	24.0
K814	–	–	–	–	–	–	–	–	–	∅200	308	24.0	∅250	320	5.0
K913	–	–	–	–	–	–	–	–	–	–	–	–	∅250	294	25.0
K914	–	–	–	–	–	–	–	–	–	∅200	353	25.0	∅250	365	25.0

16.3.6 A shaft design (hollow shaft), NF housing design (base + round flange)

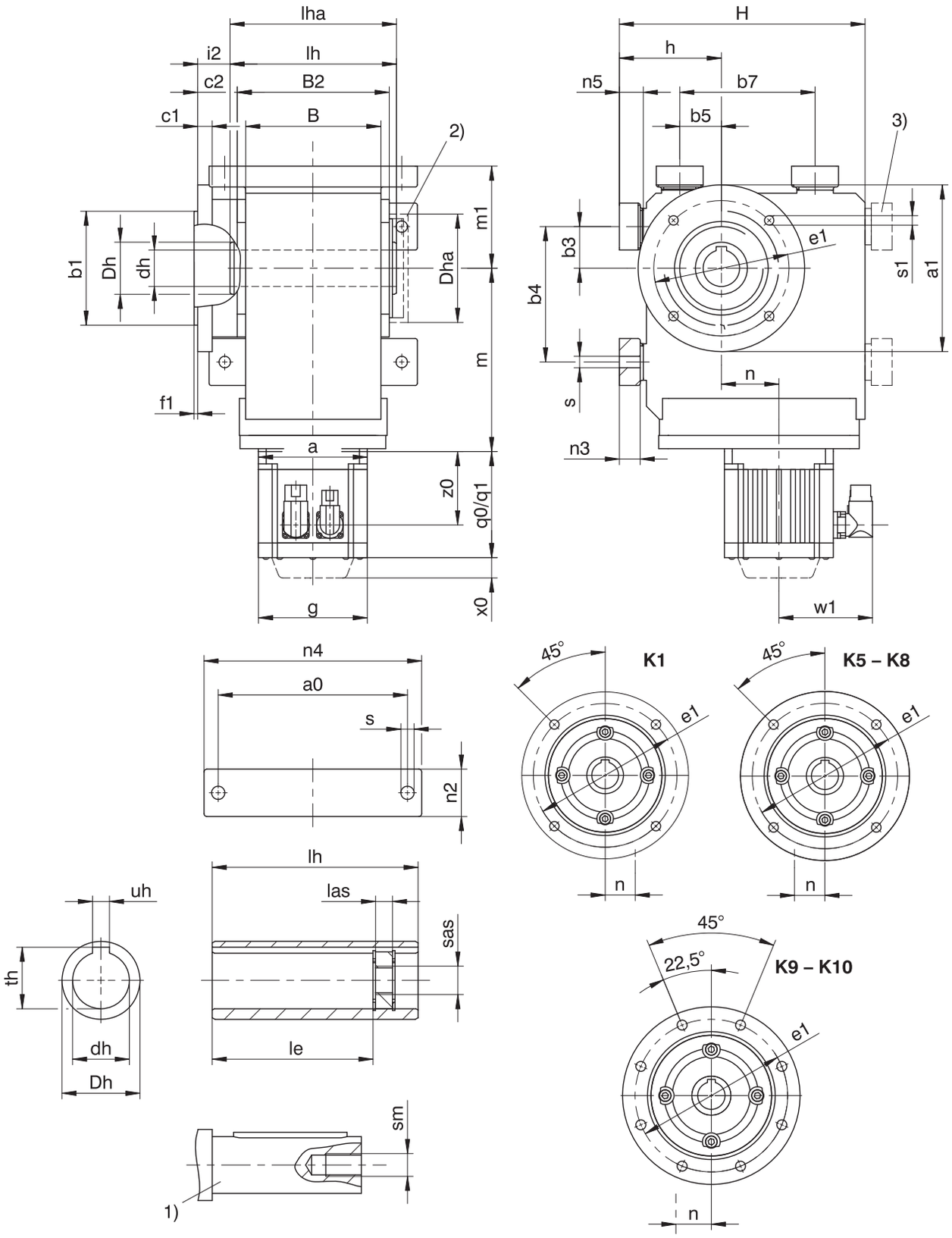

q0	Applies to motors without brake.	q1	Applies to motors with brake.
x0	Applies to encoders using an optical measuring method	w1	Different for the One Cable Solution (OCS), see the chapter [▶ 17.4]
1)	The length of the machine shaft must be at least 2.2 x ∅dh and the length of the feather key must be at least 2 x ∅dh.	2)	Cover (optional)
3)	Only for K1 (other sizes on request)		

Dimensions of gearboxes

Type	a0	Øa1	Øb1	b3	b4	b5	b7	B	B2	c1	c2	Ødh	ØDh	Dha	Øe1	f1	h
K1	115	160	110_{j6}	30	90	30	90	90	106	10	32.0	20^{H7}	40	□105	130	3.5	75
K1	115	160	110_{j6}	30	90	30	90	90	106	10	32.0	25^{H7}	40	□105	130	3.5	75
K1	115	160	110_{j6}	30	90	30	90	90	106	10	32.0	30^{H7}	40	□105	130	3.5	75
K5	200	250	180_{j6}	40	140	100	140	160	185	15	39.5	50^{H7}	65	□145	215	4.0	190
K6	210	300	230_{j6}	50	160	110	160	168	200	17	36.0	50^{H7}	70	∅183	265	4.0	220
K7	241	350	250_{h6}	55	180	125	180	190	226	18	44.0	60^{H7}	85	∅205	300	5.0	250
K8	300	400	300_{h6}	75	240	165	240	235	282	20	45.0	70^{H7}	100	∅184	350	5.0	310
K9	360	450	350_{h6}	95	280	185	280	285	330	23	50.0	90^{H7}	120	∅230	400	5.0	365
K10	330	550	450_{h6}	115	350	265	420	400	356	25	78.0	100^{H7}	130	∅200	500	5.0	420

Dimensions of gearboxes

Type	H	i2	le	lh	las	lha	m1	n2	n3	n4	n5	Øs	Øs1	sm	sas	th	uh
K1	175	25.0	98.0	120	12	127.0	75	30	13	140	15	9.0	9	M6	M8	22.8	6^{JS9}
K1	175	25.0	98.0	120	12	127.0	75	30	13	140	15	9.0	9	M10	M12	28.3	8^{JS9}
K1	175	25.0	93.5	120	12	127.0	75	30	13	140	15	9.0	9	M10	M12	32.0	8^{JS9}
K5	290	32.0	164.0	200	12	209.5	130	60	27	240	30	18.0	14	M16	M20	53.8	14^{JS9}
K6	340	28.5	179.0	215	12	224.5	150	65	27	250	30	18.5	14	M16	M20	53.8	14^{JS9}
K7	380	36.0	214.0	242	12	252.0	163	70	35	290	38	23.0	18	M20	M24	64.4	18^{JS9}
K8	455	36.0	263.0	300	20	311.0	190	85	41	360	45	27.0	18	M20	M24	74.9	20^{JS9}
K9	545	40.0	302.0	350	26	361.0	230	95	46	430	50	31.0	18	M24	M30	95.4	25^{JS9}
K10	636	51.0	361.0	410	26	441.0	270	120	–	400	45	39.0	18	M24	M30	106.4	28^{JS9}

Dimensions of additional round flanges

Type	Øa1	Øb1	c1	Øe1	f1	Øs1
K1	140	95_{j6}	10	115	3.0	9
K8	350	250_{h6}	18	300	5.0	18
K8	450	350_{h6}	20	400	5.0	18

Dimensions of motors

Type	□g	q0	q1	w1	x0	z0
EZ301U	72	114.0	154.0	55.5	21	78.5
EZ302U	72	136.0	176.0	55.5	21	100.5
EZ303U	72	158.0	198.0	55.5	21	122.5
EZ401U	98	118.5	167.0	91.0	22	76.5
EZ402U	98	143.5	192.0	91.0	22	101.5
EZ404U	98	193.5	242.0	91.0	22	151.5
EZ501U	115	112.0	166.5	100.0	22	77.5
EZ502U	115	137.0	191.5	100.0	22	102.5
EZ503U	115	162.0	216.5	100.0	22	127.5
EZ505U	115	212.0	266.5	100.0	22	177.5
EZ701U	145	125.0	184.0	115.0	22	87.0
EZ702U	145	150.0	209.0	115.0	22	112.0
EZ703U	145	175.0	234.0	115.0	22	137.0
EZ705U	145	230.0	289.0	134.0	22	188.0
EZ813U	190	273.5	350.5	156.5	22	219.5
EZ815U	190	355.5	432.5	156.5	22	301.5

The dimensions a, m and n can be found on the next page.

Dimensions of geared motors

Type	EZ3			EZ4			EZ5			EZ7			EZ8		
	a	m	n	a	m	n	a	m	n	a	m	n	a	m	n
K102	□72	124	36.0	□98	124	36.0	□115	128	36.0	□145	130	36.0	–	–	–
K513	–	–	–	–	–	–	∅160	172	15.0	□145	174	15.0	□190	177	15.0
K514	–	–	–	–	–	–	∅160	215	15.0	–	–	–	–	–	–
K613	–	–	–	–	–	–	∅160	191	18.0	∅200	193	18.0	□190	196	18.0
K614	–	–	–	–	–	–	∅160	234	18.0	–	–	–	–	–	–
K713	–	–	–	–	–	–	–	–	–	∅200	221	20.0	□190	224	20.0
K714	–	–	–	–	–	–	∅160	263	20.0	∅200	283	20.0	–	–	–
K813	–	–	–	–	–	–	–	–	–	∅200	247	24.0	∅250	249	24.0
K814	–	–	–	–	–	–	–	–	–	∅200	308	24.0	∅250	320	5.0
K913	–	–	–	–	–	–	–	–	–	–	–	–	∅250	294	25.0
K914	–	–	–	–	–	–	–	–	–	∅200	353	25.0	∅250	365	25.0
K1014	–	–	–	–	–	–	–	–	–	–	–	–	∅250	450	28.0

16.3.7 S shaft design (hollow shaft with shrink disk), G housing design (pitch circle diameter)

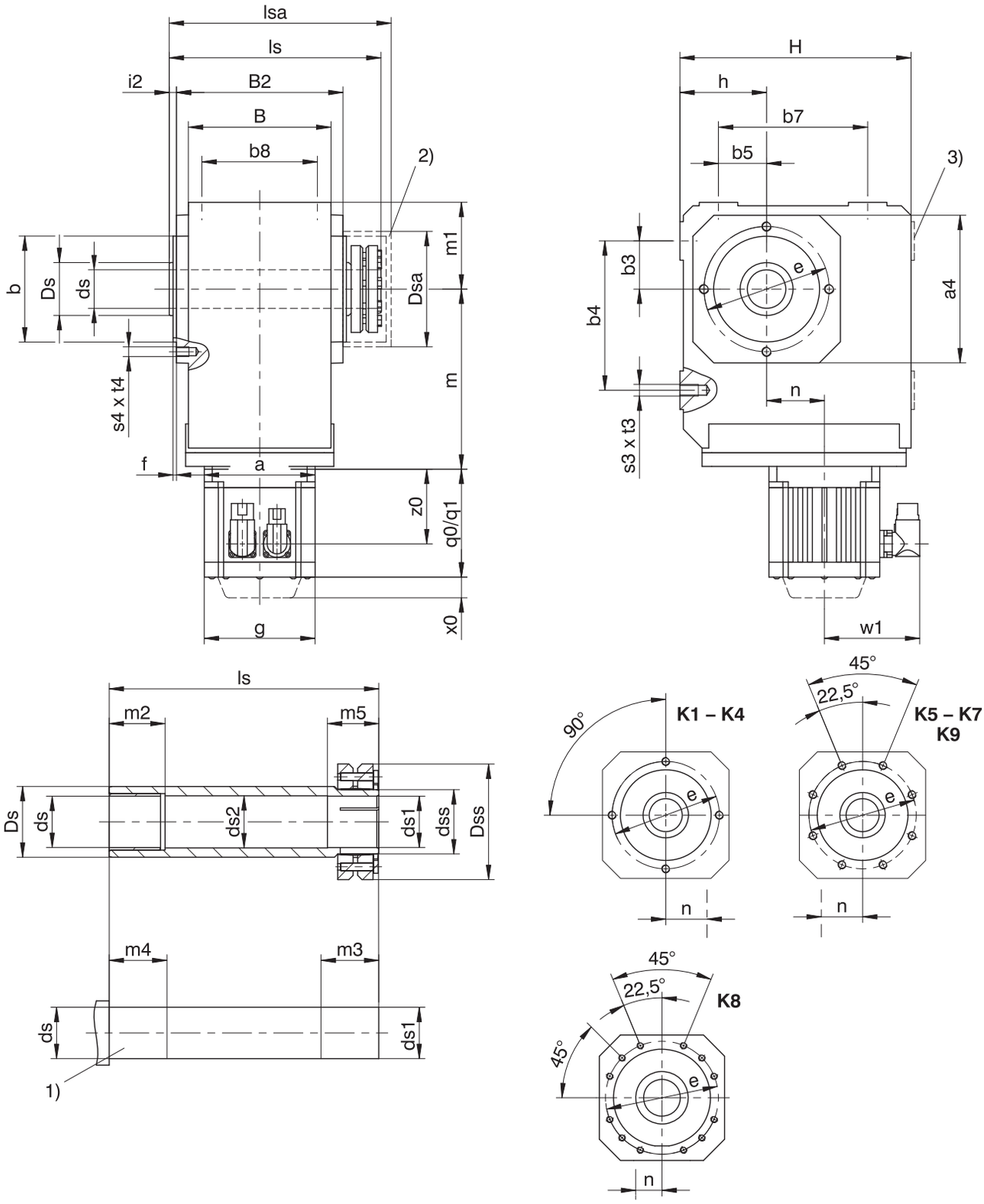

q0	Applies to motors without brake.	q1	Applies to motors with brake.
x0	Applies to encoders using an optical measuring method.	w1	Different for the One Cable Solution (OCS), see the chapter [▶ 17.4]
1)	Machine shaft: The dimension ls must meet or exceed the specified value.	2)	Cover (optional)
3)	Only for K1 (other sizes on request)		

Dimensions of gearboxes

Type	□a4	Øb	b3	b4	b5	b7	b8	B	B2	Ød	Ød1	Ød2	Ødss	ØDs	ØDsa	ØDss	Øe	f	h	H	i2	ls	lsa	m1	m2	m3	m4	m5	s3	s4	t3	t4
K1	105	75_{j6}	30	90	30	90	70	90	106	25_{h9}	25_{h9}^{H7}	25.5	30	40	80.0	60	90	3.0	60	160	7.0	149	163	60	20	34	25	29	M8	M8	13	13
K2	116	82_{j6}	35	115	35	115	90	115	134	30_{h9}	30_{h9}^{H7}	30.5	36	45	88.0	72	100	3.0	65	190	7.0	178	193	65	25	39	30	34	M10	M8	16	13
K3	132	95_{j6}	40	130	40	130	105	130	146	35_{h9}	35_{h9}^{H7}	35.5	44	50	101.0	80	115	3.0	75	213	7.0	190	206	75	30	39	35	34	M10	M8	16	13
K4	152	110_{j6}	50	155	50	155	120	148	173	40_{h9}	40_{h9}^{H7}	40.5	50	55	114.0	88	130	3.5	90	240	7.5	220	243	90	40	39	45	34	M12	M10	19	16
K5	145	110_{j6}	40	140	100	140	125	160	185	50_{h9}	50_{h9}^{H7}	50.5	62	65	116.0	106	130	3.5	160	260	7.5	237	254	100	40	44	45	39	M16	M10	26	16
K6	180	140_{j6}	50	160	110	160	130	168	200	50_{h9}	50_{h9}^{H7}	50.5	62	70	128.0	106	165	3.5	190	310	7.5	254	276	120	40	45	45	40	M16	M10	26	16
K7	195	155_{h6}	55	180	125	180	145	190	226	60_{h6}	60_{h6}^{H7}	62.0	75	85	161.5	138	185	3.5	212	342	8.0	278	314	125	40	45	45	40	M20	M12	33	19
K8	226	185_{h6}	75	240	165	240	185	235	282	70_{h6}	70_{h6}^{H7}	72.0	90	100	193.0	155	215	4.0	265	410	9.0	352	378	145	50	60	60	50	M24	M12	38	19
K9	280	230_{h6}	95	280	185	280	225	285	330	90_{h6}	90_{h6}^{H7}	92.0	120	120	244.0	200	265	5.0	315	495	10.0	418	428	180	60	70	70	60	M30	M16	48	26

Dimensions of motors

Type	□g	q0	q1	w1	x0	z0
EZ301U	72	114.0	154.0	55.5	21	78.5
EZ302U	72	136.0	176.0	55.5	21	100.5
EZ303U	72	158.0	198.0	55.5	21	122.5
EZ401U	98	118.5	167.0	91.0	22	76.5
EZ402U	98	143.5	192.0	91.0	22	101.5
EZ404U	98	193.5	242.0	91.0	22	151.5
EZ501U	115	112.0	166.5	100.0	22	77.5
EZ502U	115	137.0	191.5	100.0	22	102.5
EZ503U	115	162.0	216.5	100.0	22	127.5
EZ505U	115	212.0	266.5	100.0	22	177.5
EZ701U	145	125.0	184.0	115.0	22	87.0
EZ702U	145	150.0	209.0	115.0	22	112.0
EZ703U	145	175.0	234.0	115.0	22	137.0
EZ705U	145	230.0	289.0	134.0	22	188.0
EZ813U	190	273.5	350.5	156.5	22	219.5
EZ815U	190	355.5	432.5	156.5	22	301.5

Dimensions of geared motors

Type	EZ3			EZ4			EZ5			EZ7			EZ8		
	a	m	n	a	m	n	a	m	n	a	m	n	a	m	n
K102	□72	124	36.0	□98	124	36.0	□115	128	36.0	□145	130	36.0	–	–	–
K202	□72	143	46.0	□98	143	46.0	□115	147	46.0	□145	149	46.0	–	–	–
K203	∅140	180	46.0	∅140	180	46.0	–	–	–	–	–	–	–	–	–
K302	∅140	163	52.5	∅140	163	52.5	□115	167	52.5	□145	169	52.5	–	–	–
K303	∅140	200	52.5	∅140	200	52.5	∅160	210	16.0	–	–	–	–	–	–
K402	–	–	–	–	–	–	∅160	187	60.0	□145	189	60.0	□190	192	60.0
K403	∅140	220	60.0	∅140	220	60.0	∅160	230	23.0	–	–	–	–	–	–
K513	–	–	–	–	–	–	∅160	172	15.0	□145	174	15.0	□190	177	15.0
K514	–	–	–	–	–	–	∅160	215	15.0	–	–	–	–	–	–
K613	–	–	–	–	–	–	∅160	191	18.0	∅200	193	18.0	□190	196	18.0
K614	–	–	–	–	–	–	∅160	234	18.0	–	–	–	–	–	–
K713	–	–	–	–	–	–	–	–	–	∅200	221	20.0	□190	224	20.0
K714	–	–	–	–	–	–	∅160	263	20.0	∅200	283	20.0	–	–	–
K813	–	–	–	–	–	–	–	–	–	∅200	247	24.0	∅250	249	24.0
K814	–	–	–	–	–	–	–	–	–	∅200	308	24.0	∅250	320	5.0
K913	–	–	–	–	–	–	–	–	–	–	–	–	∅250	294	25.0
K914	–	–	–	–	–	–	–	–	–	∅200	353	25.0	∅250	365	25.0

16.3.8 S shaft design (hollow shaft with shrink disk), NG housing design (base + pitch circle diameter)

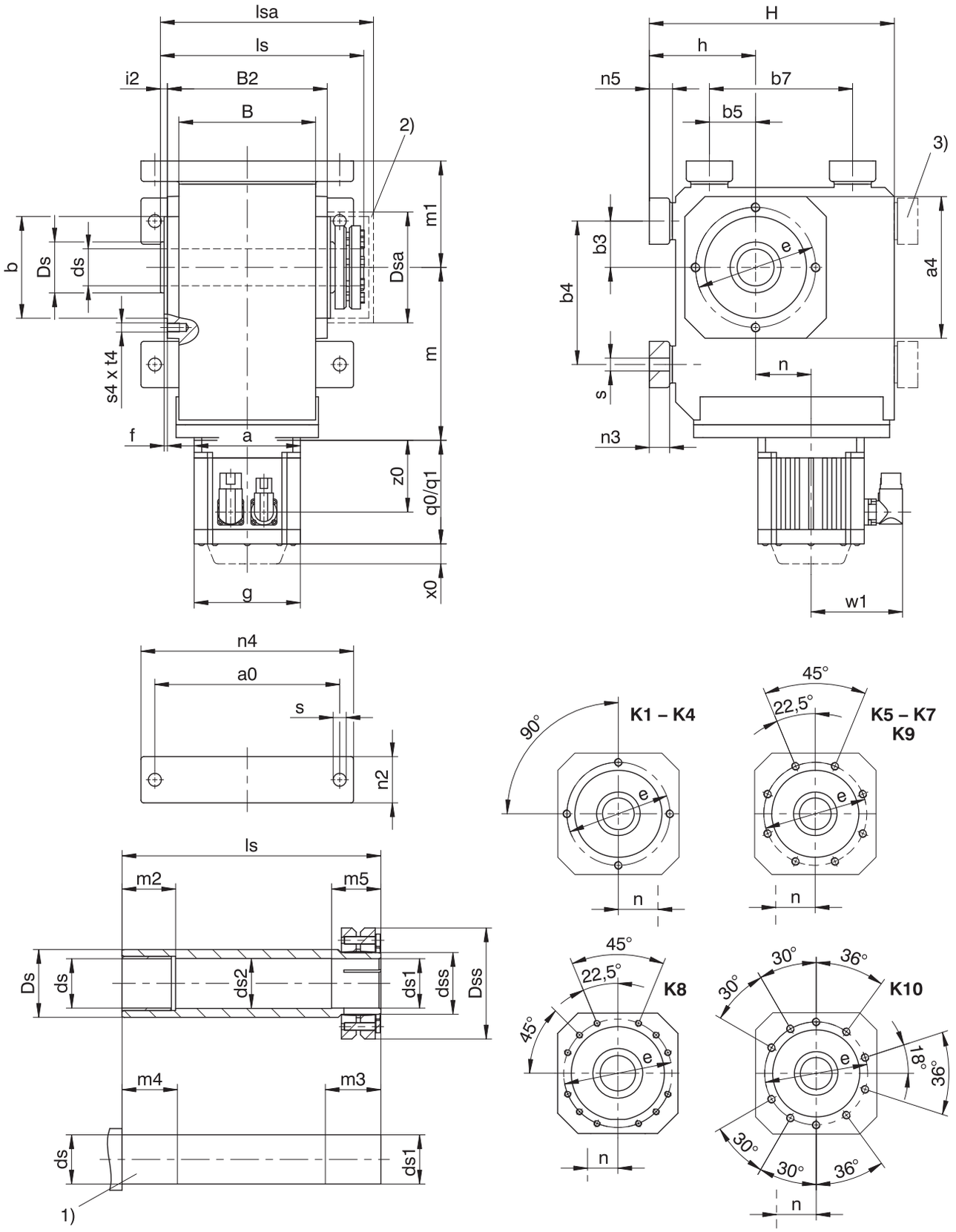

q0	Applies to motors without brake.	q1	Applies to motors with brake.
x0	Applies to encoders using an optical measuring method.	w1	Different for the One Cable Solution (OCS), see the chapter [▶ 17.4]
1)	Machine shaft: The dimension ls must meet or exceed the specified value.	2)	Cover (optional)
3)	Only for K1 (other sizes on request)		

Dimensions of gearboxes

Type	a0	a4	Øb	b3	b4	b5	b7	B	B2	Ød	Ød1	Ød2	Ødss	ØD	ØDa
K1	115	105	75_{j6}	30	90	30	90	90	106	25_{h9}	25_{h9}^{H7}	25.5	30	40	80.0
K2	155	116	82_{j6}	35	115	35	115	115	134	30_{h9}	30_{h9}^{H7}	30.5	36	45	88.0
K3	170	132	95_{j6}	40	130	40	130	130	146	35_{h9}	35_{h9}^{H7}	35.5	44	50	101.0
K4	200	152	110_{j6}	50	155	50	155	148	173	40_{h9}	40_{h9}^{H7}	40.5	50	55	114.0
K5	200	145	110_{j6}	40	140	100	140	160	185	50_{h9}	50_{h9}^{H7}	50.5	62	65	116.0
K6	210	180	140_{j6}	50	160	110	160	168	200	50_{h9}	50_{h9}^{H7}	50.5	62	70	128.0
K7	241	195	155_{j6}	55	180	125	180	190	226	60_{h6}	60_{h6}^{H7}	62.0	75	85	161.5
K8	300	226	185_{j6}	75	240	165	240	235	282	70_{h6}	70_{h6}^{H7}	72.0	90	100	193.0
K9	360	280	230_{j6}	95	280	185	280	285	330	90_{h6}	90_{h6}^{H7}	92.0	120	120	244.0
K10	330	340	250_{h6}	115	350	265	420	400	356	100_{h6}	100_{h6}^{H7}	102.0	130	130	274.0

Dimensions of gearboxes

Type	ØDss	Øe	f	h	H	i2	ls	lsa	m1	m2	m3	m4	m5	n2	n3	n4	n5	Øs	s4	t4
K1	60	90	3.0	75	175	7.0	149	163	75	20	34	25	29	30	13	140	15	9.0	M8	13
K2	72	100	3.0	88	213	7.0	178	193	88	25	39	30	34	40	20	185	23	11.0	M8	13
K3	80	115	3.0	98	236	7.0	190	206	98	30	39	35	34	45	20	200	23	11.0	M8	13
K4	88	130	3.5	115	265	7.5	220	243	115	40	39	45	34	50	22	230	25	14.0	M10	16
K5	106	130	3.5	190	290	7.5	237	254	130	40	44	45	39	60	27	240	30	18.0	M10	16
K6	106	165	3.5	220	340	7.5	254	276	150	40	45	45	40	65	27	250	30	18.5	M10	16
K7	138	185	3.5	250	380	8.0	278	314	163	40	45	45	40	70	35	290	38	23.0	M12	19
K8	155	215	4.0	310	455	9.0	352	378	190	50	60	60	50	85	41	360	45	27.0	M12	19
K9	200	265	5.0	365	545	10.0	418	428	230	60	70	70	60	95	46	430	50	31.0	M16	26
K10	215	300	20.0	420	636	27.0	483	497	270	60	80	70	70	120	–	400	45	39.0	M20	33

Dimensions of motors

Type	□g	q0	q1	w1	x0	z0
EZ301U	72	114.0	154.0	55.5	21	78.5
EZ302U	72	136.0	176.0	55.5	21	100.5
EZ303U	72	158.0	198.0	55.5	21	122.5
EZ401U	98	118.5	167.0	91.0	22	76.5
EZ402U	98	143.5	192.0	91.0	22	101.5
EZ404U	98	193.5	242.0	91.0	22	151.5
EZ501U	115	112.0	166.5	100.0	22	77.5
EZ502U	115	137.0	191.5	100.0	22	102.5
EZ503U	115	162.0	216.5	100.0	22	127.5
EZ505U	115	212.0	266.5	100.0	22	177.5
EZ701U	145	125.0	184.0	115.0	22	87.0
EZ702U	145	150.0	209.0	115.0	22	112.0
EZ703U	145	175.0	234.0	115.0	22	137.0
EZ705U	145	230.0	289.0	134.0	22	188.0
EZ813U	190	273.5	350.5	156.5	22	219.5
EZ815U	190	355.5	432.5	156.5	22	301.5

The dimensions a, m and n can be found on the next page.

Dimensions of geared motors

Type	EZ3			EZ4			EZ5			EZ7			EZ8		
	a	m	n	a	m	n	a	m	n	a	m	n	a	m	n
K102	□72	124	36.0	□98	124	36.0	□115	128	36.0	□145	130	36.0	–	–	–
K202	□72	143	46.0	□98	143	46.0	□115	147	46.0	□145	149	46.0	–	–	–
K203	∅140	180	46.0	∅140	180	46.0	–	–	–	–	–	–	–	–	–
K302	∅140	163	52.5	∅140	163	52.5	□115	167	52.5	□145	169	52.5	–	–	–
K303	∅140	200	52.5	∅140	200	52.5	∅160	210	16.0	–	–	–	–	–	–
K402	–	–	–	–	–	–	∅160	187	60.0	□145	189	60.0	□190	192	60.0
K403	∅140	220	60.0	∅140	220	60.0	∅160	230	23.0	–	–	–	–	–	–
K513	–	–	–	–	–	–	∅160	172	15.0	□145	174	15.0	□190	177	15.0
K514	–	–	–	–	–	–	∅160	215	15.0	–	–	–	–	–	–
K613	–	–	–	–	–	–	∅160	191	18.0	∅200	193	18.0	□190	196	18.0
K614	–	–	–	–	–	–	∅160	234	18.0	–	–	–	–	–	–
K713	–	–	–	–	–	–	–	–	–	∅200	221	20.0	□190	224	20.0
K714	–	–	–	–	–	–	∅160	263	20.0	∅200	283	20.0	–	–	–
K813	–	–	–	–	–	–	–	–	–	∅200	247	24.0	∅250	249	24.0
K814	–	–	–	–	–	–	–	–	–	∅200	308	24.0	∅250	320	5.0
K913	–	–	–	–	–	–	–	–	–	–	–	–	∅250	294	25.0
K914	–	–	–	–	–	–	–	–	–	∅200	353	25.0	∅250	365	25.0
K1014	–	–	–	–	–	–	–	–	–	–	–	–	∅250	450	28.0

16.3.9 S shaft design (hollow shaft with shrink ring), GD housing design (pitch circle diameter + torque arm bracket)

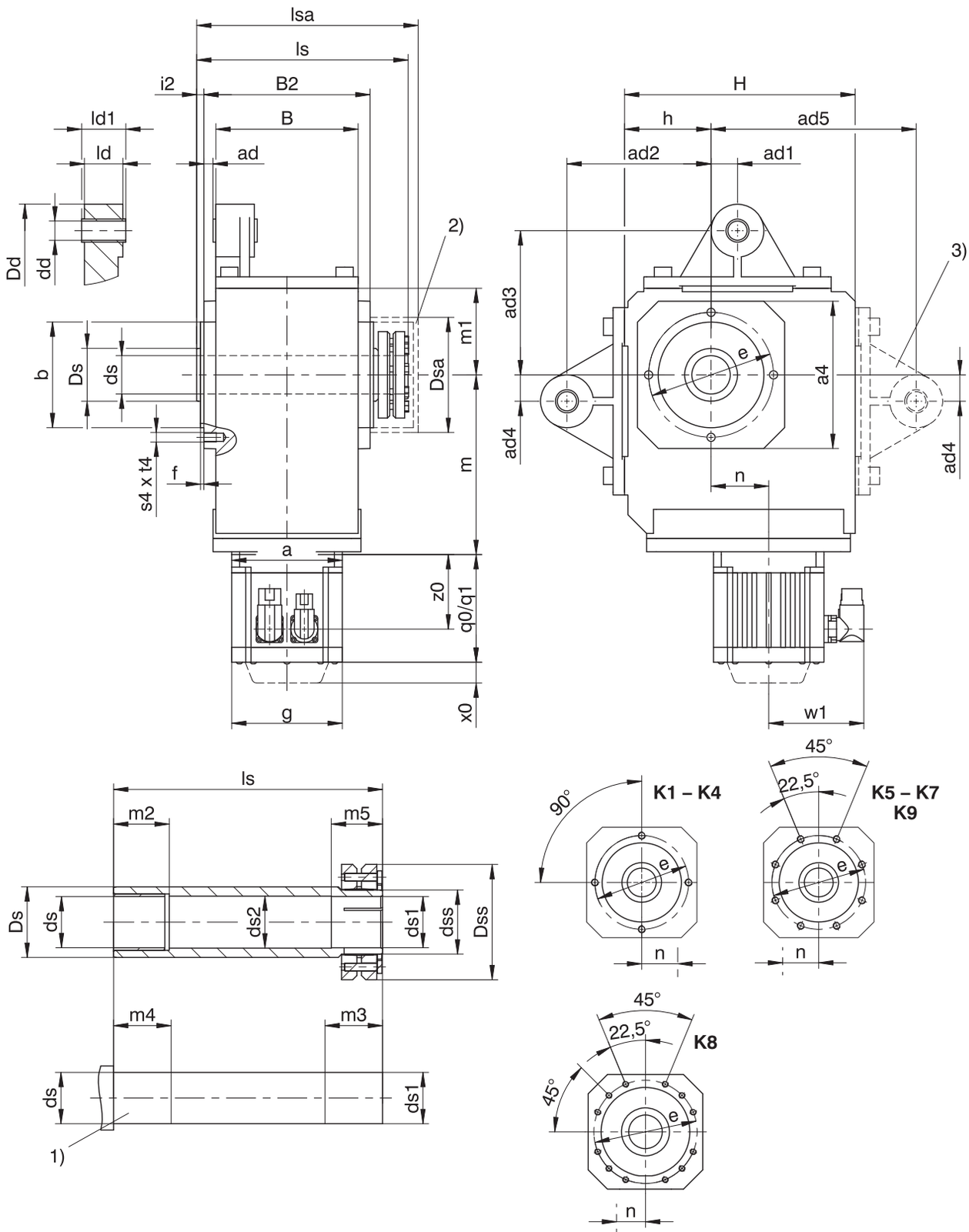

q0	Applies to motors without brake.	q1	Applies to motors with brake.
x0	Applies to encoders using an optical measuring method.	w1	Different for the One Cable Solution (OCS), see the chapter [▶ 17.4]
1)	Machine shaft: The dimension ls must meet or exceed the specified value.	2)	Cover (optional)
3)	Only for K1 (other sizes on request)	–	If you brace the gearboxes without the torque arm brackets provided by the manufacturer for this purpose, the dimensions for ad2 and ad3 must meet the specified value.

Dimensions of gearboxes

Type	□a4	ad	ad1	ad2	ad3	ad4	ad5	Øb	B	B2	Ødd	Ød$_s$	Ød$_{s1}$	Ød$_{s2}$	Ød$_{ss}$	ØDd	ØDs	ØDsa
K1	105	6.0	15.0	90	90	15.0	130	75_{j6}	90	106	12^{H9}	25_{h9}	$25_{h9}{}^{H7}$	25.5	30	43	40	80.0
K2	116	6.5	22.5	100	100	22.5	–	82_{j6}	115	134	16^{H9}	30_{h9}	$30_{h9}{}^{H7}$	30.5	36	45	45	88.0
K3	132	5.0	25.0	120	120	25.0	–	95_{j6}	130	146	16^{H9}	35_{h9}	$35_{h9}{}^{H7}$	35.5	44	45	50	101.0
K4	152	9.5	27.5	150	150	27.5	–	110_{j6}	148	173	20^{H9}	40_{h9}	$40_{h9}{}^{H7}$	40.5	50	55	55	114.0
K5	145	9.5	30.0	250	190	30.0	–	110_{j6}	160	185	20^{H9}	50_{h9}	$50_{h9}{}^{H7}$	50.5	62	58	65	116.0
K6	180	13.0	30.0	250	180	30.0	–	140_{j6}	168	200	20^{H9}	50_{h9}	$50_{h9}{}^{H7}$	50.5	62	58	70	128.0
K7	195	15.0	35.0	300	213	35.0	–	155_{h6}	190	226	20^{H9}	60_{h6}	$60_{h6}{}^{H7}$	62.0	75	68	85	161.5
K8	226	17.0	45.0	350	230	45.0	–	185_{h6}	235	282	24^{H9}	70_{h6}	$70_{h6}{}^{H7}$	72.0	90	72	100	193.0
K9	280	16.0	45.0	450	315	45.0	–	230_{h6}	285	330	24^{H9}	90_{h6}	$90_{h6}{}^{H7}$	92.0	120	75	120	244.0

Dimensions of gearboxes

Type	ØDss	Øe	f	h	H	i2	ld	ld1	ls	lsa	m1	m2	m3	m4	m5	s4	t4
K1	60	90	3.0	60	160	7.0	24	28	149	163	60	20	34	25	29	M8	13
K2	72	100	3.0	65	190	7.0	32	38	178	193	65	25	39	30	34	M8	13
K3	80	115	3.0	75	213	7.0	32	38	190	206	75	30	39	35	34	M8	13
K4	88	130	3.5	90	240	7.5	40	46	220	243	90	40	39	45	34	M10	16
K5	106	130	3.5	160	260	7.5	40	46	237	254	100	40	44	45	39	M10	16
K6	106	165	3.5	190	310	7.5	40	46	254	276	120	40	45	45	40	M10	16
K7	138	185	3.5	212	342	8.0	64	70	278	314	125	40	45	45	40	M12	19
K8	155	215	4.0	265	410	9.0	102	115	352	378	145	50	60	60	50	M12	19
K9	200	265	5.0	315	495	10.0	102	115	418	428	180	60	70	70	60	M16	26

Dimensions of motors

Type	□g	q0	q1	w1	x0	z0
EZ301U	72	114.0	154.0	55.5	21	78.5
EZ302U	72	136.0	176.0	55.5	21	100.5
EZ303U	72	158.0	198.0	55.5	21	122.5
EZ401U	98	118.5	167.0	91.0	22	76.5
EZ402U	98	143.5	192.0	91.0	22	101.5
EZ404U	98	193.5	242.0	91.0	22	151.5
EZ501U	115	112.0	166.5	100.0	22	77.5
EZ502U	115	137.0	191.5	100.0	22	102.5
EZ503U	115	162.0	216.5	100.0	22	127.5
EZ505U	115	212.0	266.5	100.0	22	177.5
EZ701U	145	125.0	184.0	115.0	22	87.0
EZ702U	145	150.0	209.0	115.0	22	112.0
EZ703U	145	175.0	234.0	115.0	22	137.0
EZ705U	145	230.0	289.0	134.0	22	188.0
EZ813U	190	273.5	350.5	156.5	22	219.5
EZ815U	190	355.5	432.5	156.5	22	301.5

The dimensions a, m and n can be found on the next page.

Dimensions of geared motors

Type	EZ3			EZ4			EZ5			EZ7			EZ8		
	a	m	n	a	m	n	a	m	n	a	m	n	a	m	n
K102	□72	124	36.0	□98	124	36.0	□115	128	36.0	□145	130	36.0	–	–	–
K202	□72	143	46.0	□98	143	46.0	□115	147	46.0	□145	149	46.0	–	–	–
K203	∅140	180	46.0	∅140	180	46.0	–	–	–	–	–	–	–	–	–
K302	∅140	163	52.5	∅140	163	52.5	□115	167	52.5	□145	169	52.5	–	–	–
K303	∅140	200	52.5	∅140	200	52.5	∅160	210	16.0	–	–	–	–	–	–
K402	–	–	–	–	–	–	∅160	187	60.0	□145	189	60.0	□190	192	60.0
K403	∅140	220	60.0	∅140	220	60.0	∅160	230	23.0	–	–	–	–	–	–
K513	–	–	–	–	–	–	∅160	172	15.0	□145	174	15.0	□190	177	15.0
K514	–	–	–	–	–	–	∅160	215	15.0	–	–	–	–	–	–
K613	–	–	–	–	–	–	∅160	191	18.0	∅200	193	18.0	□190	196	18.0
K614	–	–	–	–	–	–	∅160	234	18.0	–	–	–	–	–	–
K713	–	–	–	–	–	–	–	–	–	∅200	221	20.0	□190	224	20.0
K714	–	–	–	–	–	–	∅160	263	20.0	∅200	283	20.0	–	–	–
K813	–	–	–	–	–	–	–	–	–	∅200	247	24.0	∅250	249	24.0
K814	–	–	–	–	–	–	–	–	–	∅200	308	24.0	∅250	320	5.0
K913	–	–	–	–	–	–	–	–	–	–	–	–	∅250	294	25.0
K914	–	–	–	–	–	–	–	–	–	∅200	353	25.0	∅250	365	25.0

16.3.10 S shaft design (hollow shaft with shrink ring), NGD housing design (foot + pitch circle diameter + torque arm bracket)

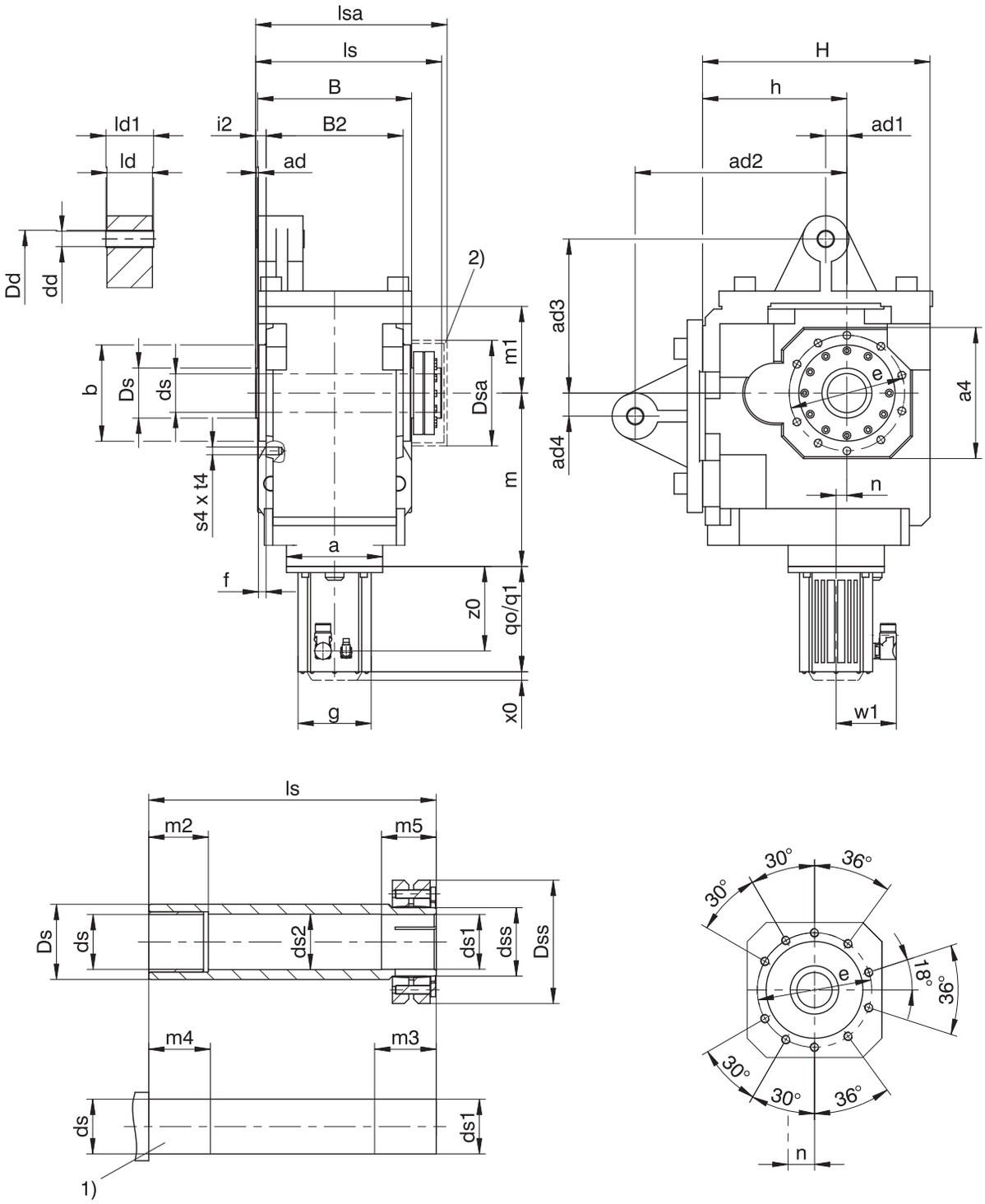

q0	Applies to motors without brake.	q1	Applies to motors with brake.
x0	Applies to encoders using an optical measuring method.	w1	Different for the One Cable Solution (OCS), see the chapter [▶ 17.4]
1)	Machine shaft: The dimension ls must meet or exceed the specified value.	2)	Cover (optional)
–	If you brace the gearboxes without the torque arm brackets provided by the manufacturer for this purpose, the dimensions for ad2 and ad3 must meet the specified value.		

Dimensions of gearboxes

Type	□a4	ad	ad1	ad2	ad3	ad4	Øb	B	B2	Ødd	Øds	Øds1	Øds2	Ødss	ØDd	ØDs	ØDsa
K10	340	5	55	550	400	60	250_{h6}	400	356	40^{H9}	100_{h6}	100_{h6}^{H7}	102	130	120	130	274

Dimensions of gearboxes

Type	ØDss	Øe	f	h	H	i2	ld	ld1	ls	lsa	m1	m2	m3	m4	m5	s4	t4
K10	215	300	20	375	591	27	118	124	483	497	225	60	80	70	70	M20	33

Dimensions of motors

Type	□g	q0	q1	w1	x0	z0
EZ813U	190	273.5	350.5	156.5	22	219.5
EZ815U	190	355.5	432.5	156.5	22	301.5

Dimensions of geared motors

Type	EZ8		
	a	m	n
K1014	∅250	450	28.0

16.3.11 S shaft design (hollow shaft with shrink disk), F housing design (round flange)

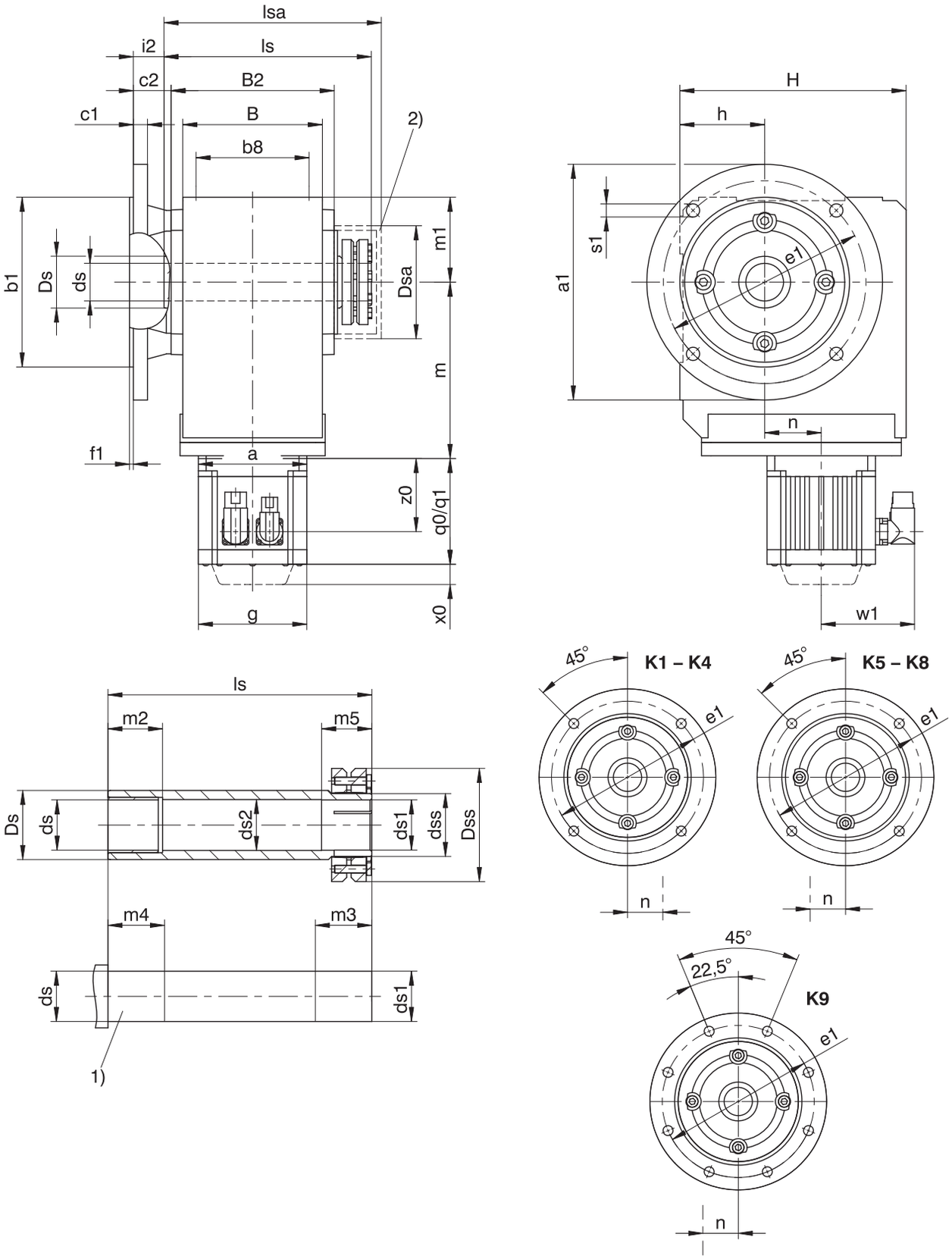

q0	Applies to motors without brake.	q1	Applies to motors with brake.
x0	Applies to encoders using an optical measuring method.	w1	Different for the One Cable Solution (OCS), see the chapter [▶ 17.4]
1)	Machine shaft: The dimension ls must meet or exceed the specified value.	2)	Cover (optional)

Dimensions of gearboxes

Type	Øa1	Øb1	b8	B	B2	c1	c2	Ød	Ød1	Ød2	Ødss	ØDs	ØDsa	ØDss	Øe1	f1	h	H	i2	ls	lsa	m1	m2	m3	m4	m5	Øs1
K1	160	110_{j6}	70	90	106	10	32.0	25_{h9}	25_{h9}^{H7}	25.5	30	40	80.0	60	130	3.5	60	160	25.0	149	163	60	20	34	25	29	9
K2	200	130_{j6}	90	115	134	12	32.0	30_{h9}	30_{h9}^{H7}	30.5	36	45	88.0	72	165	3.5	65	190	25.0	178	193	65	25	39	30	34	11
K3	200	130_{j6}	105	130	146	14	38.0	35_{h9}	35_{h9}^{H7}	35.5	44	50	101.0	80	165	3.5	75	213	31.0	190	206	75	30	39	35	34	11
K4	250	180_{j6}	120	148	173	15	40.0	40_{h9}	40_{h9}^{H7}	40.5	50	55	114.0	88	215	4.0	90	240	32.5	220	243	90	40	39	45	34	14
K5	250	180_{j6}	125	160	185	15	39.5	50_{h9}	50_{h9}^{H7}	50.5	62	65	116.0	106	215	4.0	160	260	32.0	237	254	100	40	44	45	39	14
K6	300	230_{j6}	130	168	200	17	36.0	50_{h9}	50_{h9}^{H7}	50.5	62	70	128.0	106	265	4.0	190	310	28.5	254	276	120	40	45	45	40	14
K7	350	250_{h6}	145	190	226	18	44.0	60_{h6}	60_{h6}^{H7}	62.0	75	85	161.5	138	300	5.0	212	342	36.0	278	314	125	40	45	45	40	18
K8	400	300_{h6}	185	235	282	20	45.0	70_{h6}	70_{h6}^{H7}	72.0	90	100	193.0	155	350	5.0	265	410	36.0	352	378	145	50	60	60	50	18
K9	450	350_{h6}	225	285	330	23	50.0	90_{h6}	90_{h6}^{H7}	92.0	120	120	244.0	200	400	5.0	315	495	40.0	418	428	180	60	70	70	60	18

Dimensions of additional round flanges

Type	Øa1	Øb1	c1	Øe1	f1	Øs1
K1	140	95_{j6}	10	115	3.0	9
K2	160	110_{j6}	12	130	3.5	9
K3	160	110_{j6}	14	130	3.5	9
K3	250	180_{j6}	14	215	4.0	14
K8	350	250_{h6}	18	300	5.0	18
K8	450	350_{h6}	20	400	5.0	18

Dimensions of motors

Type	□g	q0	q1	w1	x0	z0
EZ301U	72	114.0	154.0	55.5	21	78.5
EZ302U	72	136.0	176.0	55.5	21	100.5
EZ303U	72	158.0	198.0	55.5	21	122.5
EZ401U	98	118.5	167.0	91.0	22	76.5
EZ402U	98	143.5	192.0	91.0	22	101.5
EZ404U	98	193.5	242.0	91.0	22	151.5
EZ501U	115	112.0	166.5	100.0	22	77.5
EZ502U	115	137.0	191.5	100.0	22	102.5
EZ503U	115	162.0	216.5	100.0	22	127.5
EZ505U	115	212.0	266.5	100.0	22	177.5
EZ701U	145	125.0	184.0	115.0	22	87.0
EZ702U	145	150.0	209.0	115.0	22	112.0
EZ703U	145	175.0	234.0	115.0	22	137.0
EZ705U	145	230.0	289.0	134.0	22	188.0
EZ813U	190	273.5	350.5	156.5	22	219.5
EZ815U	190	355.5	432.5	156.5	22	301.5

The dimensions a, m and n can be found on the next page.

Dimensions of geared motors

Type	EZ3			EZ4			EZ5			EZ7			EZ8		
	a	m	n	a	m	n	a	m	n	a	m	n	a	m	n
K102	□72	124	36.0	□98	124	36.0	□115	128	36.0	□145	130	36.0	–	–	–
K202	□72	143	46.0	□98	143	46.0	□115	147	46.0	□145	149	46.0	–	–	–
K203	∅140	180	46.0	∅140	180	46.0	–	–	–	–	–	–	–	–	–
K302	∅140	163	52.5	∅140	163	52.5	□115	167	52.5	□145	169	52.5	–	–	–
K303	∅140	200	52.5	∅140	200	52.5	∅160	210	16.0	–	–	–	–	–	–
K402	–	–	–	–	–	–	∅160	187	60.0	□145	189	60.0	□190	192	60.0
K403	∅140	220	60.0	∅140	220	60.0	∅160	230	23.0	–	–	–	–	–	–
K513	–	–	–	–	–	–	∅160	172	15.0	□145	174	15.0	□190	177	15.0
K514	–	–	–	–	–	–	∅160	215	15.0	–	–	–	–	–	–
K613	–	–	–	–	–	–	∅160	191	18.0	∅200	193	18.0	□190	196	18.0
K614	–	–	–	–	–	–	∅160	234	18.0	–	–	–	–	–	–
K713	–	–	–	–	–	–	–	–	–	∅200	221	20.0	□190	224	20.0
K714	–	–	–	–	–	–	∅160	263	20.0	∅200	283	20.0	–	–	–
K813	–	–	–	–	–	–	–	–	–	∅200	247	24.0	∅250	249	24.0
K814	–	–	–	–	–	–	–	–	–	∅200	308	24.0	∅250	320	5.0
K913	–	–	–	–	–	–	–	–	–	–	–	–	∅250	294	25.0
K914	–	–	–	–	–	–	–	–	–	∅200	353	25.0	∅250	365	25.0

16.3.12 S shaft design (hollow shaft with shrink disk), NF housing design (base + round flange)

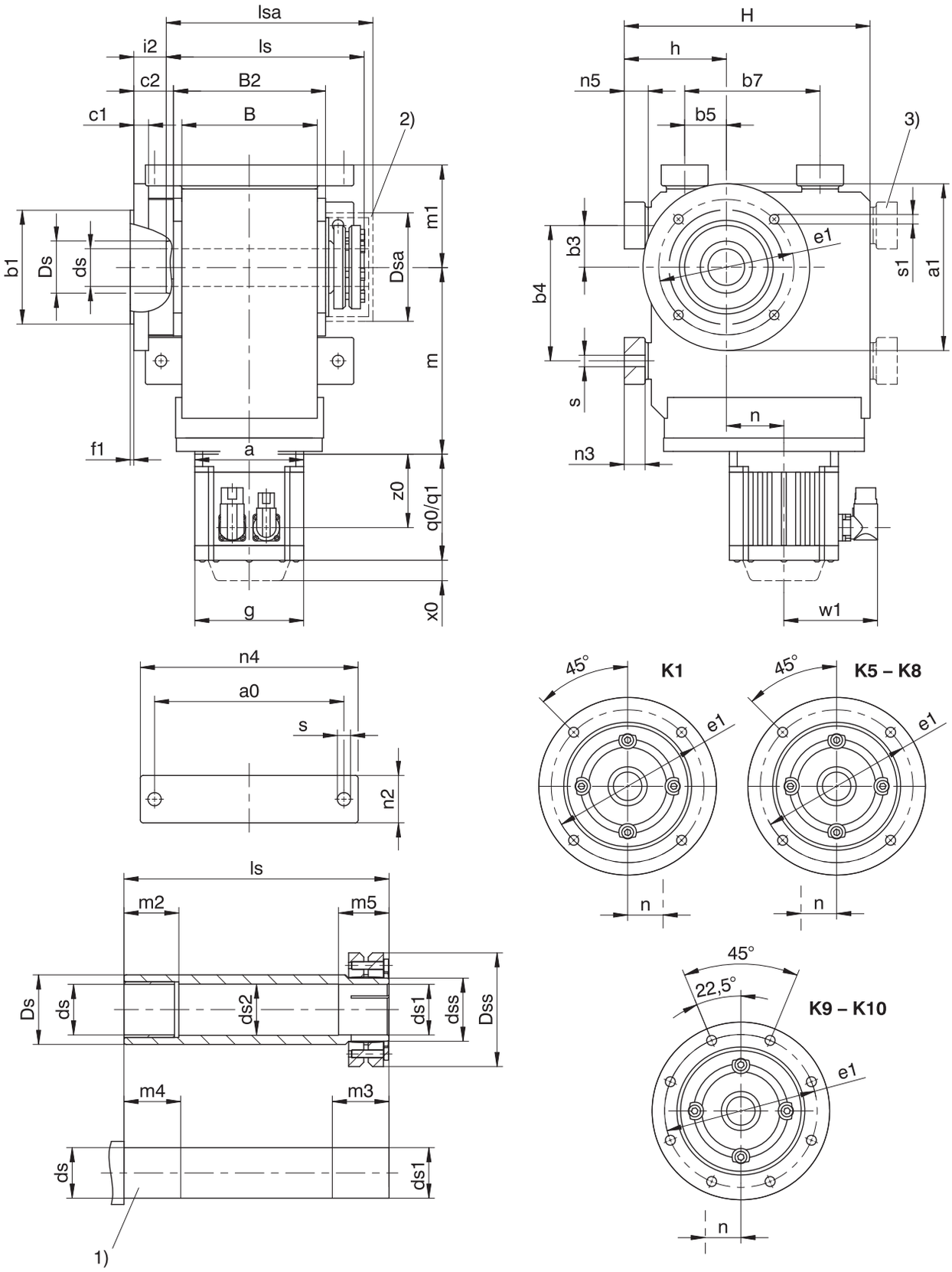

q0	Applies to motors without brake.	q1	Applies to motors with brake.
x0	Applies to encoders using an optical measuring method.	w1	Different for the One Cable Solution (OCS), see the chapter [▶ 17.4]
1)	Machine shaft: The dimension ls must meet or exceed the specified value.	2)	Cover (optional)
3)	Only for K1 (other sizes on request)		

Dimensions of gearboxes

Type	a0	Øa1	Øb1	b3	b4	b5	b7	B	B2	c1	Ød	Ød1	Ød2	Ødss	ØD	ØDa	ØDs
K1	115	160	110_{j6}	30	90	30	90	90	106	10	25_{h9}	25_{h9}^{H7}	25.5	30	40	80.0	60
K5	200	250	180_{j6}	40	140	100	140	160	185	15	50_{h9}	50_{h9}^{H7}	50.5	62	65	116.0	106
K6	210	300	230_{j6}	50	160	110	160	168	200	17	50_{h9}	50_{h9}^{H7}	50.5	62	70	128.0	106
K7	241	350	250_{h6}	55	180	125	180	190	226	18	60_{h6}	60_{h6}^{H7}	62.0	75	85	161.5	138
K8	300	400	300_{h6}	75	240	165	240	235	282	20	70_{h6}	70_{h6}^{H7}	72.0	90	100	193.0	155
K9	360	450	350_{h6}	95	280	185	280	285	330	23	90_{h6}	90_{h6}^{H7}	92.0	120	120	244.0	200
K10	330	550	450_{h6}	115	350	265	420	400	356	25	100_{h6}	100_{h6}^{H7}	102.0	130	130	274.0	215

Dimensions of gearboxes

Type	Øe1	f1	h	H	i2	ls	lsa	m1	m2	m3	m4	m5	n2	n3	n4	n5	Øs	Øs1
K1	130	3.5	75	175	25.0	149	163	75	20	34	25	29	30	13	140	15	9.0	9
K5	215	4.0	190	290	32.0	237	254	130	40	44	45	39	60	27	240	30	18.0	14
K6	265	4.0	220	340	28.5	254	276	150	40	45	45	40	65	27	250	30	18.5	14
K7	300	5.0	250	380	36.0	278	314	163	40	45	45	40	70	35	290	38	23.0	18
K8	350	5.0	310	455	36.0	352	378	190	50	60	60	50	85	41	360	45	27.0	18
K9	400	5.0	365	545	40.0	418	428	230	60	70	70	60	95	46	430	50	31.0	18
K10	500	5.0	420	636	51.0	483	497	270	60	80	70	70	120	–	400	45	39.0	18

Dimensions of additional round flanges

Type	Øa1	Øb1	c1	Øe1	f1	Øs1
K1	140	95_{j6}	10	115	3.0	9
K8	350	250_{h6}	18	300	5.0	18
K8	450	350_{h6}	20	400	5.0	18

Dimensions of motors

Type	□g	q0	q1	w1	x0	z0
EZ301U	72	114.0	154.0	55.5	21	78.5
EZ302U	72	136.0	176.0	55.5	21	100.5
EZ303U	72	158.0	198.0	55.5	21	122.5
EZ401U	98	118.5	167.0	91.0	22	76.5
EZ402U	98	143.5	192.0	91.0	22	101.5
EZ404U	98	193.5	242.0	91.0	22	151.5
EZ501U	115	112.0	166.5	100.0	22	77.5
EZ502U	115	137.0	191.5	100.0	22	102.5
EZ503U	115	162.0	216.5	100.0	22	127.5
EZ505U	115	212.0	266.5	100.0	22	177.5
EZ701U	145	125.0	184.0	115.0	22	87.0
EZ702U	145	150.0	209.0	115.0	22	112.0
EZ703U	145	175.0	234.0	115.0	22	137.0
EZ705U	145	230.0	289.0	134.0	22	188.0
EZ813U	190	273.5	350.5	156.5	22	219.5
EZ815U	190	355.5	432.5	156.5	22	301.5

The dimensions a, m and n can be found on the next page.

Dimensions of geared motors

Type	EZ3			EZ4			EZ5			EZ7			EZ8		
	a	m	n	a	m	n	a	m	n	a	m	n	a	m	n
K102	□72	124	36.0	□98	124	36.0	□115	128	36.0	□145	130	36.0	–	–	–
K513	–	–	–	–	–	–	∅160	172	15.0	□145	174	15.0	□190	177	15.0
K514	–	–	–	–	–	–	∅160	215	15.0	–	–	–	–	–	–
K613	–	–	–	–	–	–	∅160	191	18.0	∅200	193	18.0	□190	196	18.0
K614	–	–	–	–	–	–	∅160	234	18.0	–	–	–	–	–	–
K713	–	–	–	–	–	–	–	–	–	∅200	221	20.0	□190	224	20.0
K714	–	–	–	–	–	–	∅160	263	20.0	∅200	283	20.0	–	–	–
K813	–	–	–	–	–	–	–	–	–	∅200	247	24.0	∅250	249	24.0
K814	–	–	–	–	–	–	–	–	–	∅200	308	24.0	∅250	320	5.0
K913	–	–	–	–	–	–	–	–	–	–	–	–	∅250	294	25.0
K914	–	–	–	–	–	–	–	–	–	∅200	353	25.0	∅250	365	25.0
K1014	–	–	–	–	–	–	–	–	–	–	–	–	∅250	450	28.0

16.3.13 V shaft design (solid shaft), G housing design (pitch circle diameter)

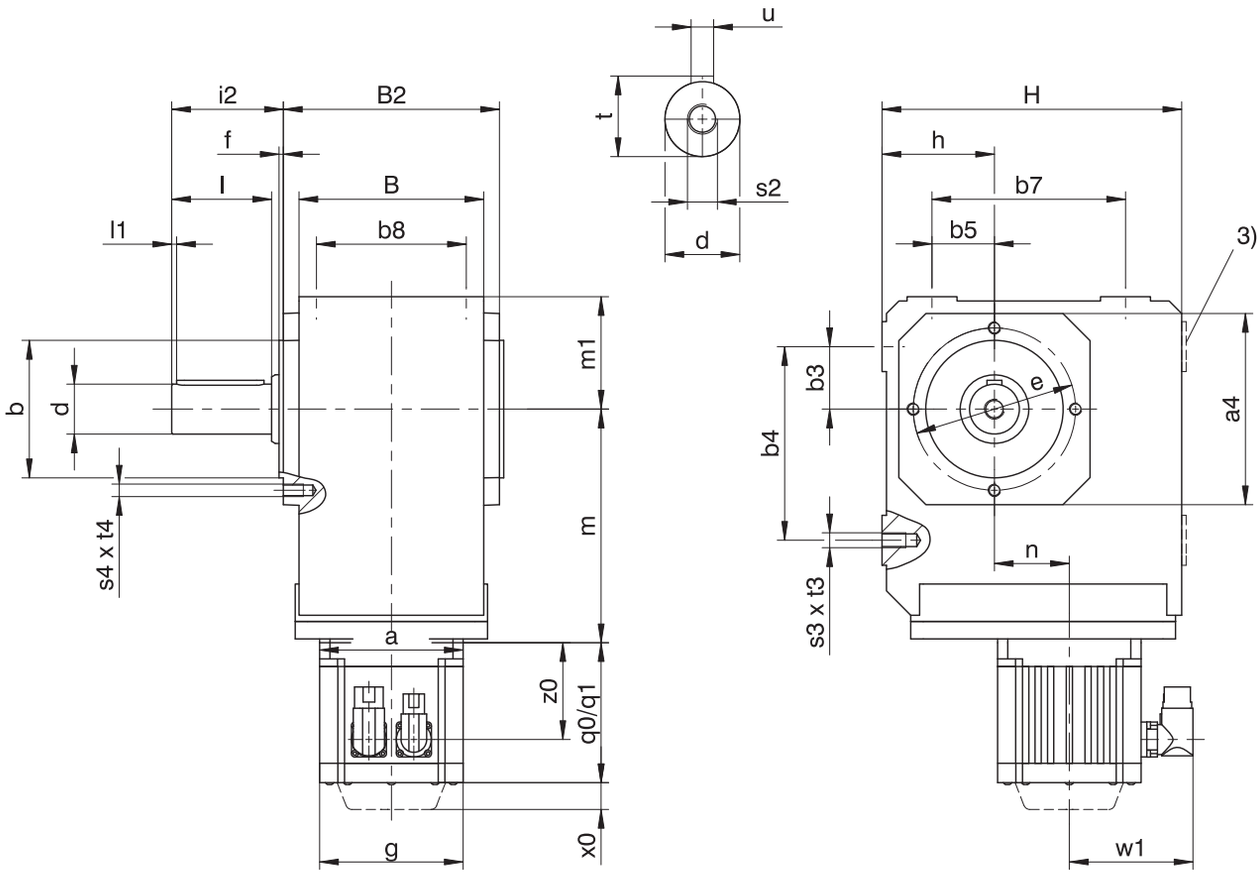

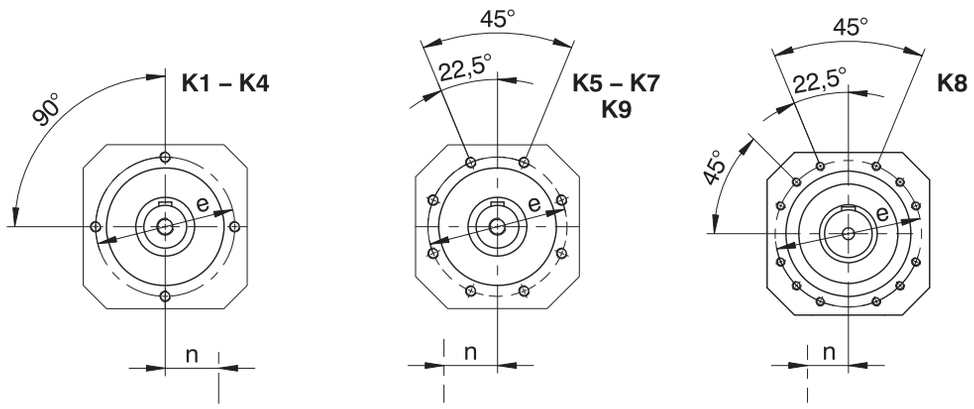

q0	Applies to motors without brake.	q1	Applies to motors with brake.
x0	Applies to encoders using an optical measuring method.	w1	Different for the One Cable Solution (OCS), see the chapter [▶ 17.4]
3)	Only for K1 (other sizes on request)	–	K1 – K4: Solid shaft without feather key available, on request starting at K5.
–	K1 – K9: Solid shaft on both sides available.		

Dimensions of gearboxes

Type	□a4	Øb	b3	b4	b5	b7	b8	B	B2	Ød	Øe	f	h	H	i2	l	l1	m1	s2	s3	s4	t	t3	t4	u
K1	105	75_{j6}	30	90	30	90	70	90	106	25_{k6}	90	3.0	60	160	62.0	50	4	60	M10	M8	M8	28.0	13	13	A8×7×40
K2	116	82_{j6}	35	115	35	115	90	115	134	30_{k6}	100	3.0	65	190	68.0	60	4	65	M10	M10	M8	33.0	16	13	A8×7×50
K3	132	95_{j6}	40	130	40	130	105	130	146	30_{k6}	115	3.0	75	213	69.0	60	4	75	M10	M10	M8	33.0	16	13	A8×7×50
K4	152	110_{j6}	50	155	50	155	120	148	173	40_{k6}	130	3.5	90	240	89.5	80	4	90	M16	M12	M10	43.0	19	16	A12×8×70
K5	145	110_{j6}	40	140	100	140	125	160	185	45_{k6}	130	3.5	160	260	129.5	90	4	100	M16	M16	M10	48.5	26	16	A14×9×80
K6	180	140_{j6}	50	160	110	160	130	168	200	50_{k6}	165	3.5	190	310	136.0	100	4	120	M16	M16	M10	53.5	26	16	A14×9×90
K7	195	155_{j6}	55	180	125	180	145	190	226	60_{m6}	185	3.5	212	342	164.0	120	4	125	M20	M20	M12	64.0	33	19	A18×11×110
K8	226	185_{j6}	75	240	165	240	185	235	282	70_{m6}	215	4.0	265	410	185.0	140	5	145	M20	M24	M12	74.5	38	19	A20×12×125
K9	280	230_{j6}	95	280	185	280	225	285	330	90_{m6}	265	5.0	315	495	220.0	170	8	180	M24	M30	M16	95.0	48	26	A25×14×140

Dimensions of motors

Type	□g	q0	q1	w1	x0	z0
EZ301U	72	114.0	154.0	55.5	21	78.5
EZ302U	72	136.0	176.0	55.5	21	100.5
EZ303U	72	158.0	198.0	55.5	21	122.5
EZ401U	98	118.5	167.0	91.0	22	76.5
EZ402U	98	143.5	192.0	91.0	22	101.5
EZ404U	98	193.5	242.0	91.0	22	151.5
EZ501U	115	112.0	166.5	100.0	22	77.5
EZ502U	115	137.0	191.5	100.0	22	102.5
EZ503U	115	162.0	216.5	100.0	22	127.5
EZ505U	115	212.0	266.5	100.0	22	177.5
EZ701U	145	125.0	184.0	115.0	22	87.0
EZ702U	145	150.0	209.0	115.0	22	112.0
EZ703U	145	175.0	234.0	115.0	22	137.0
EZ705U	145	230.0	289.0	134.0	22	188.0
EZ813U	190	273.5	350.5	156.5	22	219.5
EZ815U	190	355.5	432.5	156.5	22	301.5

Dimensions of geared motors

Type	EZ3			EZ4			EZ5			EZ7			EZ8		
	a	m	n	a	m	n	a	m	n	a	m	n	a	m	n
K102	□72	124	36.0	□98	124	36.0	□115	128	36.0	□145	130	36.0	–	–	–
K202	□72	143	46.0	□98	143	46.0	□115	147	46.0	□145	149	46.0	–	–	–
K203	∅140	180	46.0	∅140	180	46.0	–	–	–	–	–	–	–	–	–
K302	∅140	163	52.5	∅140	163	52.5	□115	167	52.5	□145	169	52.5	–	–	–
K303	∅140	200	52.5	∅140	200	52.5	∅160	210	16.0	–	–	–	–	–	–
K402	–	–	–	–	–	–	∅160	187	60.0	□145	189	60.0	□190	192	60.0
K403	∅140	220	60.0	∅140	220	60.0	∅160	230	23.0	–	–	–	–	–	–
K513	–	–	–	–	–	–	∅160	172	15.0	□145	174	15.0	□190	177	15.0
K514	–	–	–	–	–	–	∅160	215	15.0	–	–	–	–	–	–
K613	–	–	–	–	–	–	∅160	191	18.0	∅200	193	18.0	□190	196	18.0
K614	–	–	–	–	–	–	∅160	234	18.0	–	–	–	–	–	–
K713	–	–	–	–	–	–	–	–	–	∅200	221	20.0	□190	224	20.0
K714	–	–	–	–	–	–	∅160	263	20.0	∅200	283	20.0	–	–	–
K813	–	–	–	–	–	–	–	–	–	∅200	247	24.0	∅250	249	24.0
K814	–	–	–	–	–	–	–	–	–	∅200	308	24.0	∅250	320	5.0
K913	–	–	–	–	–	–	–	–	–	–	–	–	∅250	294	25.0
K914	–	–	–	–	–	–	–	–	–	∅200	353	25.0	∅250	365	25.0

16.3.14 V shaft design (solid shaft), NG housing design (base + pitch circle diameter)

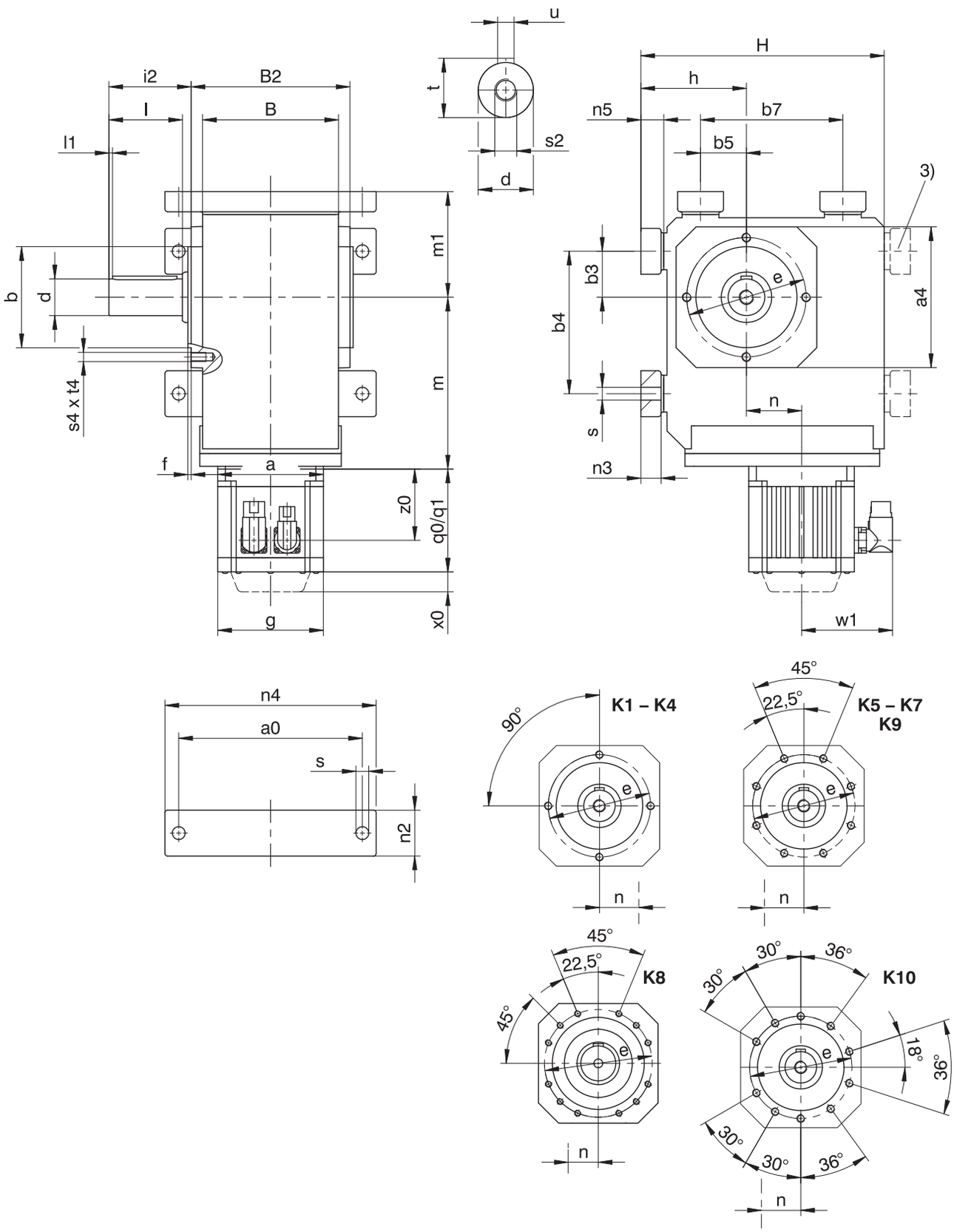

q0	Applies to motors without brake.	q1	Applies to motors with brake.
x0	Applies to encoders using an optical measuring method.	w1	Different for the One Cable Solution (OCS), see the chapter [▶ 17.4]
3)	Only for K1 (other sizes on request)	–	K1 – K4: Solid shaft without feather key available, on request starting at K5.
–	K1 – K10: Solid shaft on both sides available.		

Dimensions of gearboxes

Type	a0	□a4	Øb_{j6}	b3	b4	b5	b7	B	B2	Ød_{k6}	Øe_{j6}	f	h	H	i2	l	l1	m1	n2	n3	n4	n5	Øs_{j6}	s2	s4	t	t4	u
K1	115	105	75_{j6}	30	90	30	90	90	106	25_{k6}	90	3.0	75	175	62.0	50	4	75	30	13	140	15	9.0	M10	M8	28.0	13	A8×7×40
K2	155	116	82_{j6}	35	115	35	115	115	134	30_{k6}	100	3.0	88	213	68.0	60	4	88	40	20	185	23	11.0	M10	M8	33.0	13	A8×7×50
K3	170	132	95_{j6}	40	130	40	130	130	146	30_{k6}	115	3.0	98	236	69.0	60	4	98	45	20	200	23	11.0	M10	M8	33.0	13	A8×7×50
K4	200	152	110_{j6}	50	155	50	155	148	173	40_{k6}	130	3.5	115	265	89.5	80	4	115	50	22	230	25	14.0	M16	M10	43.0	16	A12×8×70
K5	200	145	110_{j6}	40	140	100	140	160	185	45_{k6}	130	3.5	190	290	129.5	90	4	130	60	27	240	30	18.0	M16	M10	48.5	16	A14×9×80
K6	210	180	140_{j6}	50	160	110	160	168	200	50_{k6}	165	3.5	220	340	136.0	100	4	150	65	27	250	30	18.5	M16	M10	53.5	16	A14×9×90
K7	241	195	155_{j6}	55	180	125	180	190	226	60_{m6}	185	3.5	250	380	164.0	120	4	163	70	35	290	38	23.0	M20	M12	64.0	19	A18×11×110
K8	300	226	185_{j6}	75	240	165	240	235	282	70_{m6}	215	4.0	310	455	185.0	140	5	190	85	41	360	45	27.0	M20	M12	74.5	19	A20×12×125
K9	360	280	230_{j6}	95	280	185	280	285	330	90_{m6}	265	5.0	365	545	220.0	170	8	230	95	46	430	50	31.0	M24	M16	95.0	26	A25×14×140
K10	330	340	250_{h6}	115	350	265	420	400	356	110_{m6}	300	20.0	420	636	240.0	210	15	270	120	–	400	45	39.0	M24	M20	116.0	33	A28×16×180

Dimensions of motors

Type	□g	q0	q1	w1	x0	z0
EZ301U	72	114.0	154.0	55.5	21	78.5
EZ302U	72	136.0	176.0	55.5	21	100.5
EZ303U	72	158.0	198.0	55.5	21	122.5
EZ401U	98	118.5	167.0	91.0	22	76.5
EZ402U	98	143.5	192.0	91.0	22	101.5
EZ404U	98	193.5	242.0	91.0	22	151.5
EZ501U	115	112.0	166.5	100.0	22	77.5
EZ502U	115	137.0	191.5	100.0	22	102.5
EZ503U	115	162.0	216.5	100.0	22	127.5
EZ505U	115	212.0	266.5	100.0	22	177.5
EZ701U	145	125.0	184.0	115.0	22	87.0
EZ702U	145	150.0	209.0	115.0	22	112.0
EZ703U	145	175.0	234.0	115.0	22	137.0
EZ705U	145	230.0	289.0	134.0	22	188.0
EZ813U	190	273.5	350.5	156.5	22	219.5
EZ815U	190	355.5	432.5	156.5	22	301.5

Dimensions of geared motors

Type	EZ3			EZ4			EZ5			EZ7			EZ8		
	a	m	n	a	m	n	a	m	n	a	m	n	a	m	n
K102	□72	124	36.0	□98	124	36.0	□115	128	36.0	□145	130	36.0	–	–	–
K202	□72	143	46.0	□98	143	46.0	□115	147	46.0	□145	149	46.0	–	–	–
K203	∅140	180	46.0	∅140	180	46.0	–	–	–	–	–	–	–	–	–
K302	∅140	163	52.5	∅140	163	52.5	□115	167	52.5	□145	169	52.5	–	–	–
K303	∅140	200	52.5	∅140	200	52.5	∅160	210	16.0	–	–	–	–	–	–
K402	–	–	–	–	–	–	∅160	187	60.0	□145	189	60.0	□190	192	60.0
K403	∅140	220	60.0	∅140	220	60.0	∅160	230	23.0	–	–	–	–	–	–
K513	–	–	–	–	–	–	∅160	172	15.0	□145	174	15.0	□190	177	15.0
K514	–	–	–	–	–	–	∅160	215	15.0	–	–	–	–	–	–
K613	–	–	–	–	–	–	∅160	191	18.0	∅200	193	18.0	□190	196	18.0
K614	–	–	–	–	–	–	∅160	234	18.0	–	–	–	–	–	–
K713	–	–	–	–	–	–	–	–	–	∅200	221	20.0	□190	224	20.0
K714	–	–	–	–	–	–	∅160	263	20.0	∅200	283	20.0	–	–	–
K813	–	–	–	–	–	–	–	–	–	∅200	247	24.0	∅250	249	24.0
K814	–	–	–	–	–	–	–	–	–	∅200	308	24.0	∅250	320	5.0
K913	–	–	–	–	–	–	–	–	–	–	–	–	∅250	294	25.0
K914	–	–	–	–	–	–	–	–	–	∅200	353	25.0	∅250	365	25.0
K1014	–	–	–	–	–	–	–	–	–	–	–	–	∅250	450	28.0

16.3.15 V shaft design (solid shaft), F housing design (round flange)

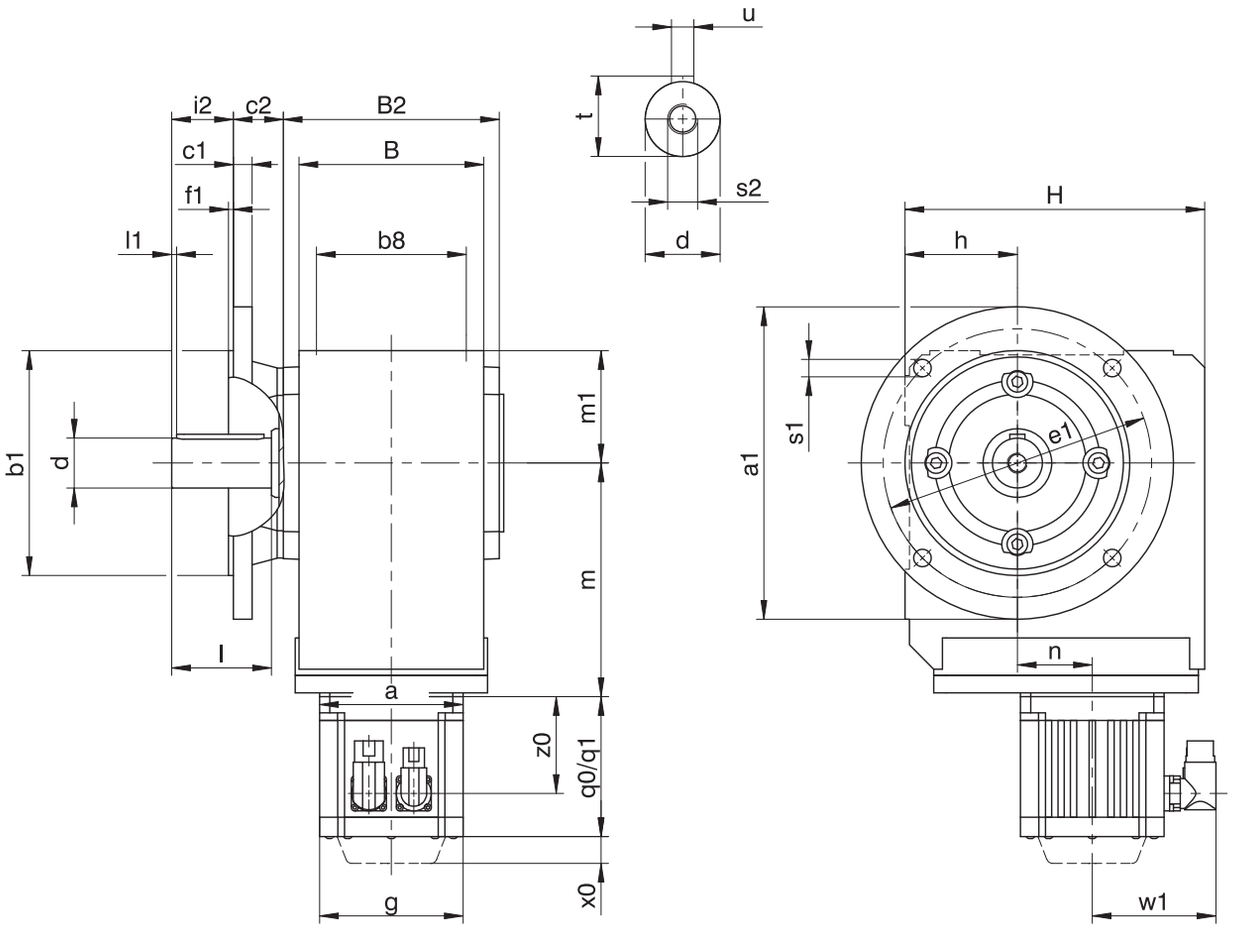

K1 – K4

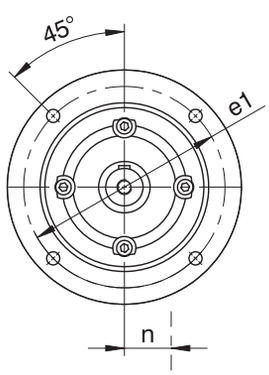

K5 – K8

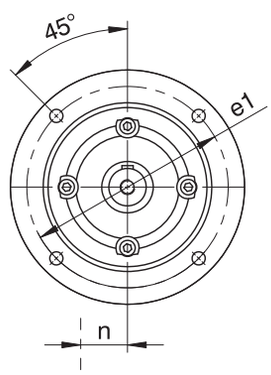

K9

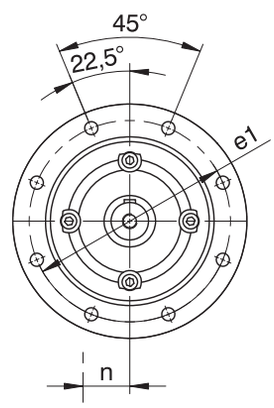

q0	Applies to motors without brake.	q1	Applies to motors with brake.
x0	Applies to encoders using an optical measuring method.	w1	Different for the One Cable Solution (OCS), see the chapter [▷ 17.4]
–	K1 – K4: Solid shaft without feather key available, on request starting at K5.	–	K1 – K9: Solid shaft on both sides available.

Dimensions of gearboxes

Type	Øa1	Øb1	b8	B	B2	c1	c2	Ød	Øe1	f1	h	H	i2	l	l1	m1	Øs1	s2	t	u
K1	160	110_{j6}	70	90	106	10	32.0	25_{k6}	130	3.5	60	160	30.0	50	4	60	9	M10	28.0	A8×7×40
K2	200	130_{j6}	90	115	134	12	32.0	30_{k6}	165	3.5	65	190	36.0	60	4	65	11	M10	33.0	A8×7×50
K3	200	130_{j6}	105	130	146	14	38.0	30_{k6}	165	3.5	75	213	31.0	60	4	75	11	M10	33.0	A8×7×50
K4	250	180_{j6}	120	148	173	15	40.0	40_{k6}	215	4.0	90	240	49.5	80	4	90	14	M16	43.0	A12×8×70
K5	250	180_{j6}	125	160	185	15	39.5	45_{k6}	215	4.0	160	260	90.0	90	4	100	14	M16	48.5	A14×9×80
K6	300	230_{j6}	130	168	200	17	36.0	50_{k6}	265	4.0	190	310	100.0	100	4	120	14	M16	53.5	A14×9×90
K7	350	250_{h6}	145	190	226	18	44.0	60_{m6}	300	5.0	212	342	120.0	120	4	125	18	M20	64.0	A18×11×110
K8	400	300_{h6}	185	235	282	20	45.0	70_{m6}	350	5.0	265	410	140.0	140	5	145	18	M20	74.5	A20×12×125
K9	450	350_{h6}	225	285	330	23	50.0	90_{m6}	400	5.0	315	495	170.0	170	8	180	18	M24	95.0	A25×14×140

Dimensions of additional round flanges

Type	Øa1	Øb1	c1	Øe1	f1	Øs1
K1	140	95_{j6}	10	115	3.0	9
K2	160	110_{j6}	12	130	3.5	9
K3	160	110_{j6}	14	130	3.5	9
K3	250	180_{j6}	14	215	4.0	14
K8	350	250_{h6}	18	300	5.0	18
K8	450	350_{h6}	20	400	5.0	18

Dimensions of motors

Type	□g	q0	q1	w1	x0	z0
EZ301U	72	114.0	154.0	55.5	21	78.5
EZ302U	72	136.0	176.0	55.5	21	100.5
EZ303U	72	158.0	198.0	55.5	21	122.5
EZ401U	98	118.5	167.0	91.0	22	76.5
EZ402U	98	143.5	192.0	91.0	22	101.5
EZ404U	98	193.5	242.0	91.0	22	151.5
EZ501U	115	112.0	166.5	100.0	22	77.5
EZ502U	115	137.0	191.5	100.0	22	102.5
EZ503U	115	162.0	216.5	100.0	22	127.5
EZ505U	115	212.0	266.5	100.0	22	177.5
EZ701U	145	125.0	184.0	115.0	22	87.0
EZ702U	145	150.0	209.0	115.0	22	112.0
EZ703U	145	175.0	234.0	115.0	22	137.0
EZ705U	145	230.0	289.0	134.0	22	188.0
EZ813U	190	273.5	350.5	156.5	22	219.5
EZ815U	190	355.5	432.5	156.5	22	301.5

Dimensions of geared motors

Type	EZ3			EZ4			EZ5			EZ7			EZ8		
	a	m	n	a	m	n	a	m	n	a	m	n	a	m	n
K102	□72	124	36.0	□98	124	36.0	□115	128	36.0	□145	130	36.0	–	–	–
K202	□72	143	46.0	□98	143	46.0	□115	147	46.0	□145	149	46.0	–	–	–
K203	∅140	180	46.0	∅140	180	46.0	–	–	–	–	–	–	–	–	–
K302	∅140	163	52.5	∅140	163	52.5	□115	167	52.5	□145	169	52.5	–	–	–
K303	∅140	200	52.5	∅140	200	52.5	∅160	210	16.0	–	–	–	–	–	–
K402	–	–	–	–	–	–	∅160	187	60.0	□145	189	60.0	□190	192	60.0
K403	∅140	220	60.0	∅140	220	60.0	∅160	230	23.0	–	–	–	–	–	–
K513	–	–	–	–	–	–	∅160	172	15.0	□145	174	15.0	□190	177	15.0
K514	–	–	–	–	–	–	∅160	215	15.0	–	–	–	–	–	–
K613	–	–	–	–	–	–	∅160	191	18.0	∅200	193	18.0	□190	196	18.0
K614	–	–	–	–	–	–	∅160	234	18.0	–	–	–	–	–	–
K713	–	–	–	–	–	–	–	–	–	∅200	221	20.0	□190	224	20.0
K714	–	–	–	–	–	–	∅160	263	20.0	∅200	283	20.0	–	–	–
K813	–	–	–	–	–	–	–	–	–	∅200	247	24.0	∅250	249	24.0
K814	–	–	–	–	–	–	–	–	–	∅200	308	24.0	∅250	320	5.0
K913	–	–	–	–	–	–	–	–	–	–	–	–	∅250	294	25.0
K914	–	–	–	–	–	–	–	–	–	∅200	353	25.0	∅250	365	25.0

16.3.16 V shaft design (solid shaft), NF housing design (base + round flange)

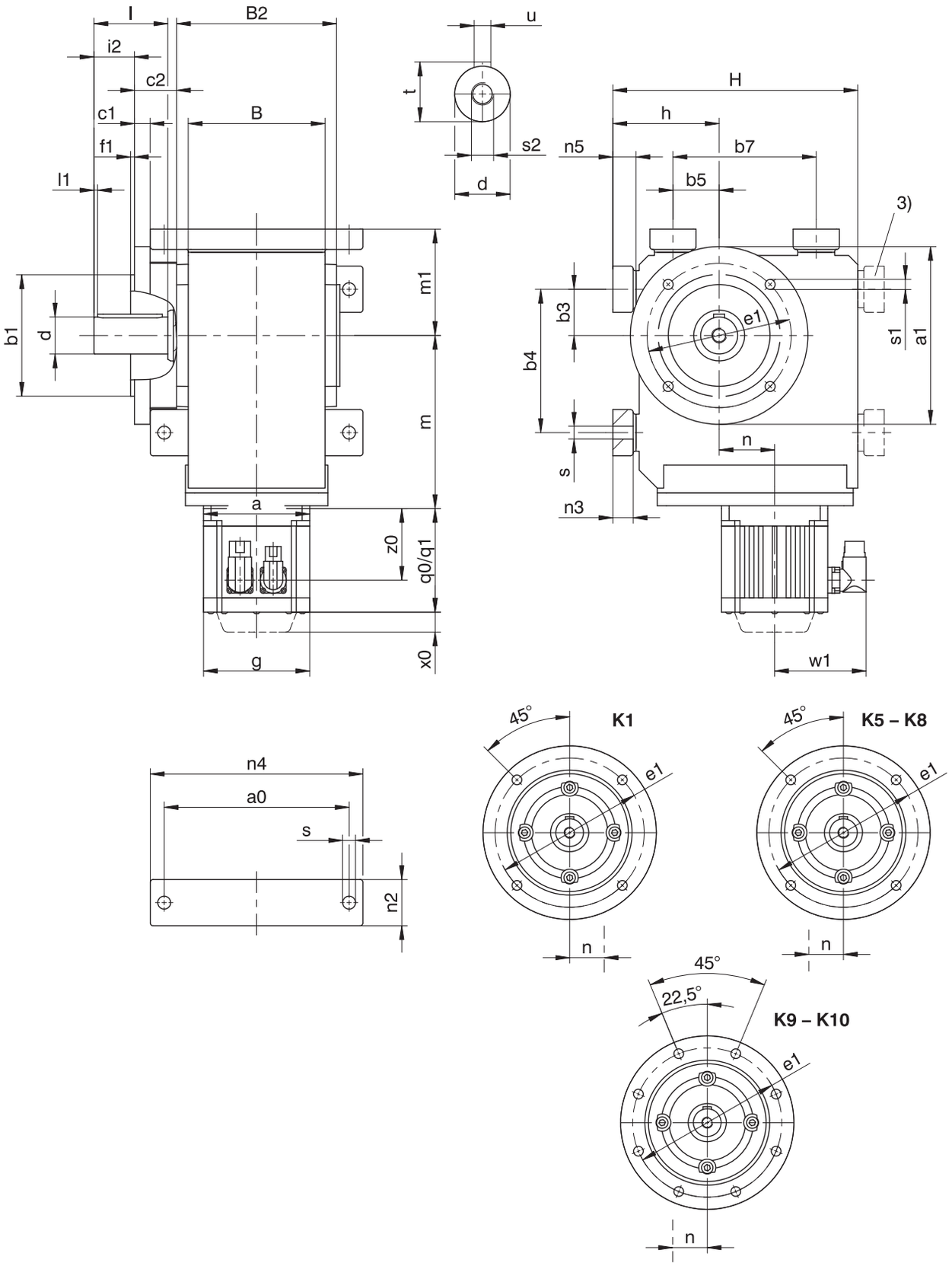

q0	Applies to motors without brake.	q1	Applies to motors with brake.
x0	Applies to encoders using an optical measuring method.	w1	Different for the One Cable Solution (OCS), see the chapter [▶ 17.4]
3)	Only for K1 (other sizes on request)	–	K1 – K4: Solid shaft without feather key available, on request starting at K5.
–	K1 – K10: Solid shaft on both sides available.		

Dimensions of gearboxes

Type	a0	Øa1	Øb1	b3	b4	b5	b7	B	B2	c1	c2	Ød	Øe1	f1	h	H	i2	l	l1	m1	n2	n3	n4	n5	Øs	Øs1	s2	t	u
K1	115	160	110_{j6}	30	90	30	90	90	106	10	32.0	25_{k6}	130	3.5	75	175	30.0	50	4	75	30	13	140	15	9.0	9	M10	28.0	A8×7×40
K5	200	250	180_{j6}	40	140	100	140	160	185	15	39.5	45_{k6}	215	4.0	190	290	90.0	90	4	130	60	27	240	30	18.0	14	M16	48.5	A14×9×80
K6	210	300	230_{j6}	50	160	110	160	168	200	17	36.0	50_{k6}	265	4.0	220	340	100.0	100	4	150	65	27	250	30	18.5	14	M16	53.5	A14×9×90
K7	241	350	250_{h6}	55	180	125	180	190	226	18	44.0	60_{m6}	300	5.0	250	380	120.0	120	4	163	70	35	290	38	23.0	18	M20	64.0	A18×11×110
K8	300	400	300_{h6}	75	240	165	240	235	282	20	45.0	70_{m6}	350	5.0	310	455	140.0	140	5	190	85	41	360	45	27.0	18	M20	74.5	A20×12×125
K9	360	450	350_{h6}	95	280	185	280	285	330	23	50.0	90_{m6}	400	5.0	365	545	170.0	170	8	230	95	46	430	50	31.0	18	M24	95.0	A25×14×140
K10	330	550	450_{h6}	115	350	265	420	400	356	25	78.0	110_{m6}	500	5.0	420	636	210.0	210	15	270	120	–	400	45	39.0	18	M24	116.0	A28×16×180

Dimensions of additional round flanges

Type	Øa1	Øb1	c1	Øe1	f1	Øs1
K1	140	95_{j6}	10	115	3.0	9
K8	350	250_{h6}	18	300	5.0	18
K8	450	350_{h6}	20	400	5.0	18

Dimensions of motors

Type	□g	q0	q1	w1	x0	z0
EZ301U	72	114.0	154.0	55.5	21	78.5
EZ302U	72	136.0	176.0	55.5	21	100.5
EZ303U	72	158.0	198.0	55.5	21	122.5
EZ401U	98	118.5	167.0	91.0	22	76.5
EZ402U	98	143.5	192.0	91.0	22	101.5
EZ404U	98	193.5	242.0	91.0	22	151.5
EZ501U	115	112.0	166.5	100.0	22	77.5
EZ502U	115	137.0	191.5	100.0	22	102.5
EZ503U	115	162.0	216.5	100.0	22	127.5
EZ505U	115	212.0	266.5	100.0	22	177.5
EZ701U	145	125.0	184.0	115.0	22	87.0
EZ702U	145	150.0	209.0	115.0	22	112.0
EZ703U	145	175.0	234.0	115.0	22	137.0
EZ705U	145	230.0	289.0	134.0	22	188.0
EZ813U	190	273.5	350.5	156.5	22	219.5
EZ815U	190	355.5	432.5	156.5	22	301.5

Dimensions of geared motors

Type	EZ3			EZ4			EZ5			EZ7			EZ8		
	a	m	n	a	m	n	a	m	n	a	m	n	a	m	n
K102	□72	124	36.0	□98	124	36.0	□115	128	36.0	□145	130	36.0	–	–	–
K513	–	–	–	–	–	–	∅160	172	15.0	□145	174	15.0	□190	177	15.0
K514	–	–	–	–	–	–	∅160	215	15.0	–	–	–	–	–	–
K613	–	–	–	–	–	–	∅160	191	18.0	∅200	193	18.0	□190	196	18.0
K614	–	–	–	–	–	–	∅160	234	18.0	–	–	–	–	–	–
K713	–	–	–	–	–	–	–	–	–	∅200	221	20.0	□190	224	20.0
K714	–	–	–	–	–	–	∅160	263	20.0	∅200	283	20.0	–	–	–
K813	–	–	–	–	–	–	–	–	–	∅200	247	24.0	∅250	249	24.0
K814	–	–	–	–	–	–	–	–	–	∅200	308	24.0	∅250	320	5.0
K913	–	–	–	–	–	–	–	–	–	–	–	–	∅250	294	25.0
K914	–	–	–	–	–	–	–	–	–	∅200	353	25.0	∅250	365	25.0
K1014	–	–	–	–	–	–	–	–	–	–	–	–	∅250	450	28.0

16.3.17 Oil expansion tank

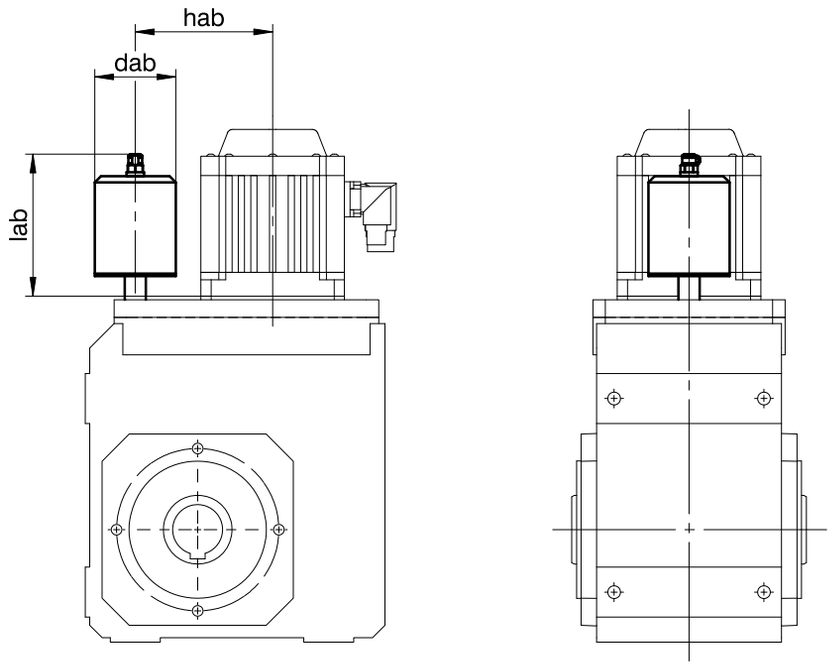

Dimensions

Type	EZ5			EZ7			EZ8		
	dab	hab	lab	dab	hab	lab	dab	hab	lab
K513	65	122.0	113.5	65	122.0	113.5	65	170.0	163.5
K613	65	148.5	116.5	65	148.5	116.5	65	150.5	111.5
K713	–	–	–	65	170.0	114.5	65	170.0	112.0
K813	–	–	–	73	205.0	129.5	73	205.0	129.5
K913	–	–	–	–	–	–	73	255.0	129.5

More information can be found in Chapter [▸ 16.6.4]

16.4 Type designation

This chapter shows you an explanation of the type designation with the associated options.

Additional ordering information not included in the type designation can be found at the end of the chapter.

Example code

K	4	0	2	A	G	0560	EZ501U

Explanation

Code	Designation	Design
K	Type	Helical bevel gearbox
4	Size	4 (example)
0	Generation	Generation 0
1		Generation 1
2	Stages	Two-stage
3		Three-stage
4		Four-stage
A	Shaft	Hollow shaft with keyway
S		Hollow shaft with shrink ring
V		Solid shaft
G	Housing	Pitch circle diameter
F		Round flange
NG		Foot + pitch circle diameter
NF		Foot + round flange
GD		Pitch circle diameter + torque arm bracket
NGD		Foot + pitch circle diameter + torque arm bracket
0560	Transmission ratio (i x 10 rounded)	i = 55.71 (example)
EZ501U	Motor	EZ synchronous servo motor

To complete the type designation, also specify the following in your order:

- A detailed type designation of the motor, see the chapter [▷ 17.5]
- Mounting position, see the chapter [▷ 16.5.5]
- Attachment of solid shaft: gearbox side 3 or 4; solid shaft on both sides
- Attachment of hollow shaft with keyway: entry side 3 or 4
- Attachment of hollow shaft with shrink ring: shrink ring on gearbox side 3 or 4
- Attachment of foot plates: gearbox side 1 or 5 (for K1, also on gear side 2)
- Attachment of flange: gearbox side 3 or 4
- Pitch circle diameter: gearbox side 3 or 4
- Attachment of torque arm bracket: torque arm bracket on gearbox side 1 or 5 (for K1, also on gearbox side 2), eye on gearbox side 3 or 4
- Position of the plug connectors, see the chapter [▷ 16.5.7]
- Oil expansion tank (option, recommended for gearboxes in mounting position EL5), see the chapter [▷ 16.6.4]
- Backlash: Standard/class II/class I. Backlash class II and class I for an additional charge.

For an explanation of the gearbox sides, see the chapter [▷ 16.5.5].

To make selecting your geared motor easy, use our STOBER Configurator at https://configurator.stoeber.de/en-US/.

You can find a detailed description of the nameplate in the chapter [▷ 17.5.1].

16.5 Product description

16.5.1 Input options

EZ synchronous servo motor



Catalog ID 442437_en

MB motor adapter +
EZ synchronous servo motor

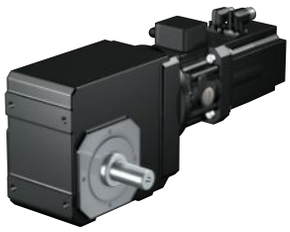

Catalog ID 443311_en

LM Lean motor



Catalog ID 443016_en

Asynchronous motor

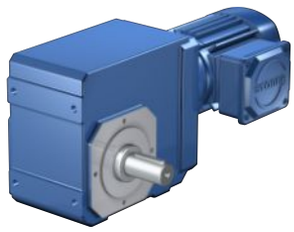

Catalog ID 443136_en

The corresponding catalogs can be found at http://www.stoeber.de/en/downloads/

Enter the ID of the catalog in the Search term field.

16.5.2 Housing design

Pitch circle diameter G	Round flange F
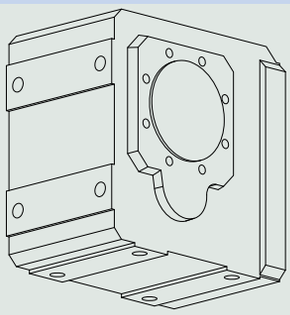	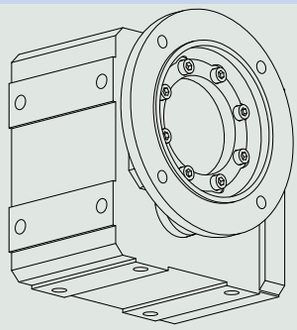

Foot + pitch circle diameter NG	Foot + round flange NF
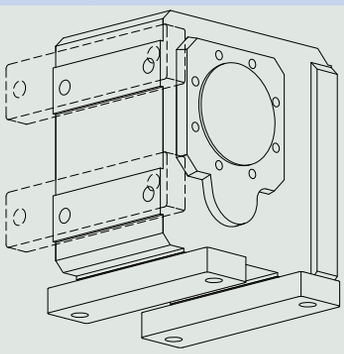	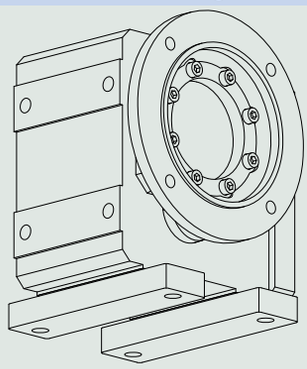

Pitch circle diameter + torque arm bracket GD	Foot + pitch circle diameter + torque arm bracket NGD
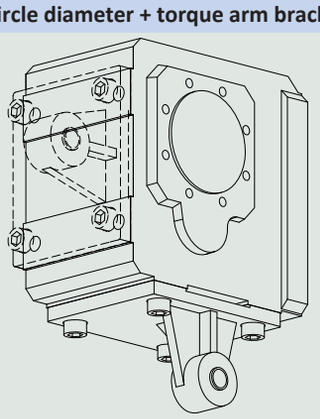	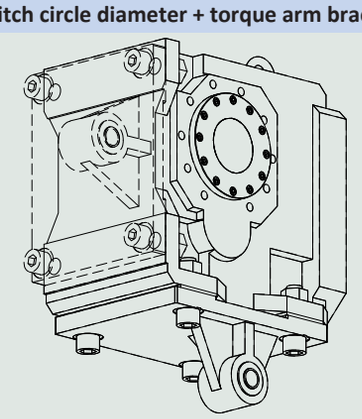

	G	F	NG	NF	GD	NGD
K1	✓	✓	✓	✓	✓	–
K2	✓	✓	✓	–	✓	–
K3	✓	✓	✓	–	✓	–
K4	✓	✓	✓	–	✓	–
K5	✓	✓	✓	✓	✓	–
K6	✓	✓	✓	✓	✓	–
K7	✓	✓	✓	✓	✓	–
K8	✓	✓	✓	✓	✓	–
K9	✓	✓	✓	✓	✓	–
K10	–	–	✓	✓	–	✓

16.5.3 Combinatorial shaft/housing design

	Housing design						
Shaft design	**Code**	**G**	**F**	**NG**	**NF**	**GD**	**NGD**
Hollow shaft with keyway	**A**	AG	AF	ANG	ANF	AGD	ANGD
Hollow shaft with shrink ring	**S**	SG	SF	SNG	SNF	SGD	SNGD
Solid shaft [1)]	**V**	VG	VF	VNG	VNF	–	–

[1)] Gearboxes in sizes K1 – K10 come with a solid shaft with feather key as standard. Gearboxes in sizes K1 – K4 can be ordered with the option of a solid shaft without feather key. Only upon request starting at size K5.

16.5.4 Installation conditions

Hollow shaft

The hollow shaft hole tolerance is ISO H7. The tolerance of the machine shaft must be ISO k6.

Take care to align the machine shaft with the gearbox hollow shaft when attaching the gearbox.

Maximum deviation ≤ 0.03 mm.

For simpler assembly and disassembly of the machine shaft, the hollow shafts are equipped with a spiral groove (as a grease deposit).

A hardened, threaded keeper plate is included in the scope of delivery. You also have the option to order the hollow shaft without a keeper plate.

Hollow shaft with shrink ring

The tolerance of the hollow shaft hole is ISO H7.

The machine shaft must be executed as follows:

Gearbox type	Tolerance
K1 to K6	ISO h9
K7 to K10	ISO h6

Select a material for the machine shaft with a permitted surface pressure of $p \geq 325\ N/mm^2$.

Possible materials:

- C45E +QT
- 42CrMo4

Fastening the gearboxes on the machine side using the pitch circle diameter

The specified torques and forces only apply when gearboxes are fastened on the machine side using screws of strength class 10.9. In addition, the gear housings must be adjusted at the pilot. The machine-side fit must be H7.

16.5.5 Mounting positions

The following table shows the standard mounting positions.

The numbers identify the gearbox sides. The mounting position is defined by the gearbox side facing downwards.

Mounting positions for gearbox sizes K1 – K4

EL1	EL2	EL3
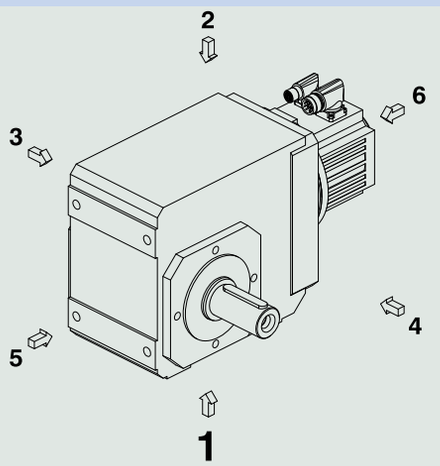	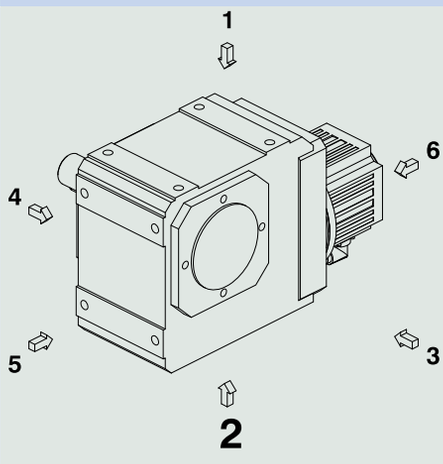	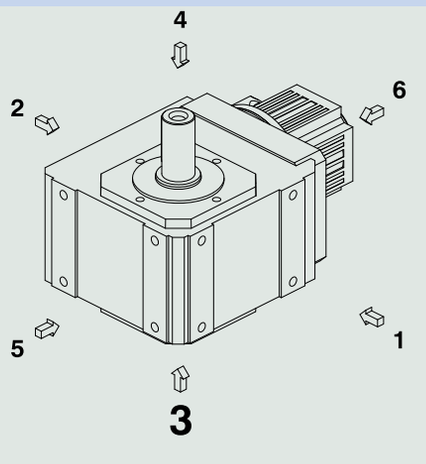
EL4	**EL5**	**EL6**
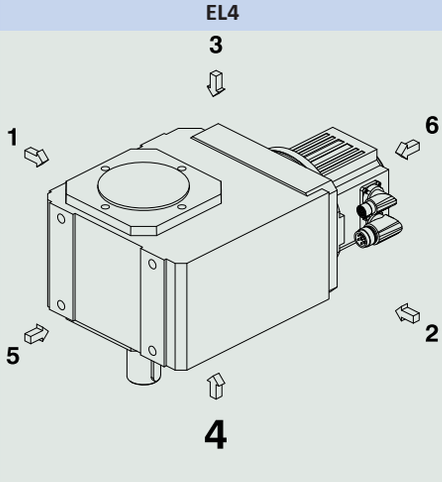	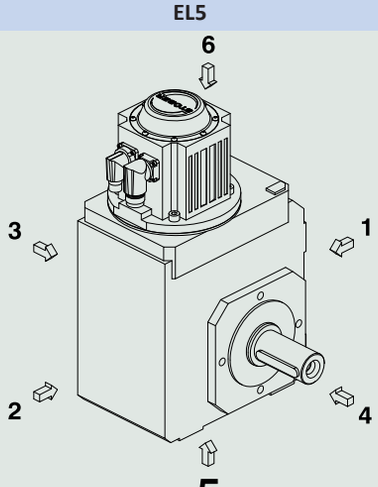	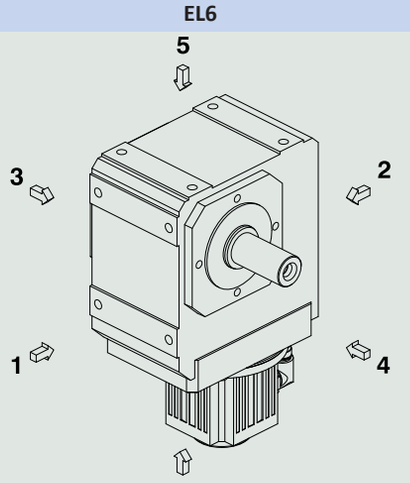

Mounting positions for gearbox sizes K5 – K10

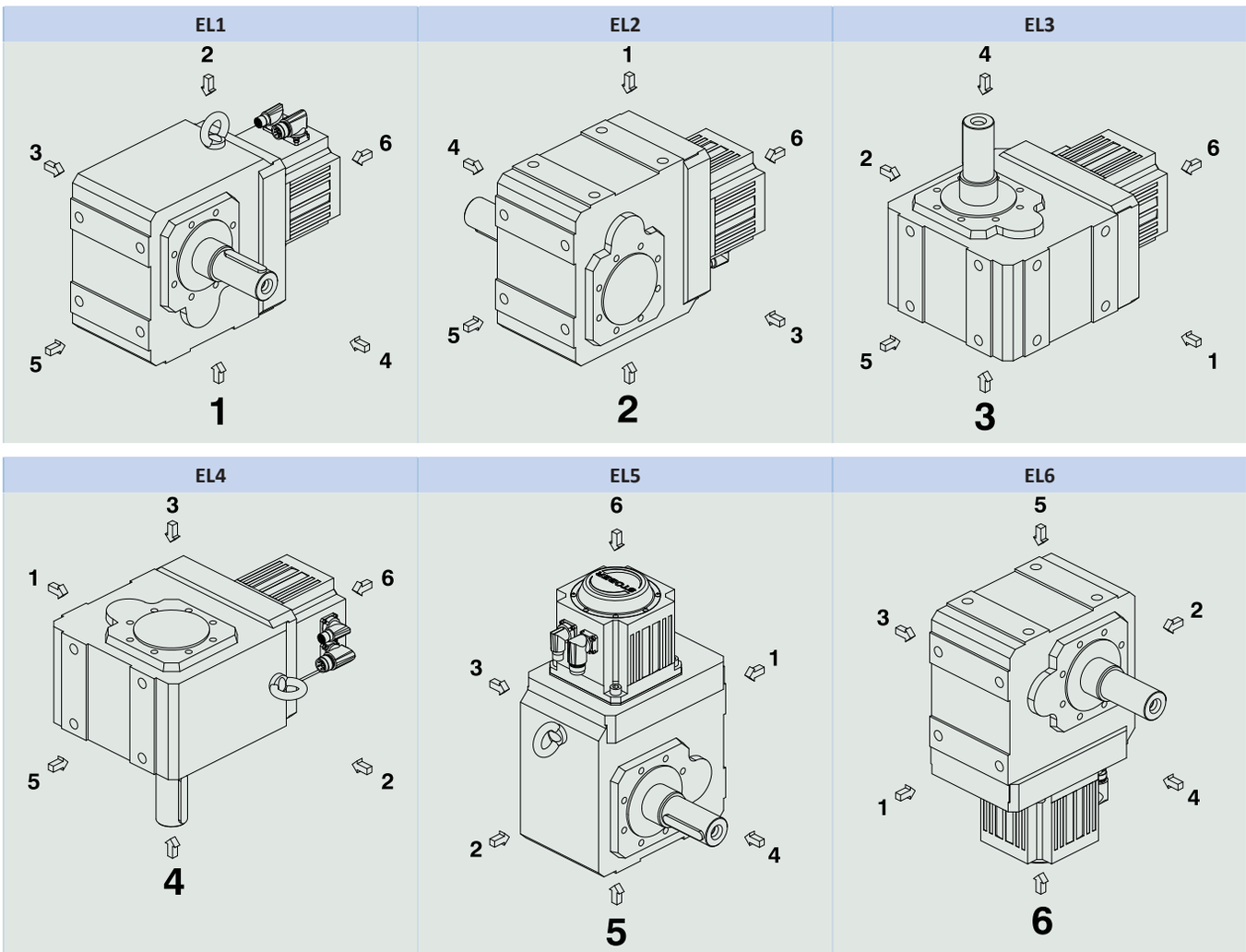

Since the lubricant filling volume of the gearbox depends on the mounting position, the mounting position must be specified when ordering.

16.5.6 Lubricants

STOBER fills the gearboxes with the amount and type of lubricant specified on the nameplate. The filling volume and the structure of the gearboxes depend on the mounting position.

Only install the gearboxes in the intended mounting position! Reposition the gearboxes only after consulting STOBER. Otherwise, STOBER assumes no liability for the gearboxes.

You will receive lubricants for use in the food industry upon request.

16.5.7 Position of the plug connectors

Mounting position EL1 Plug connector in 270° position (standard)	Mounting position EL4 Plug connector in 270° position (standard)
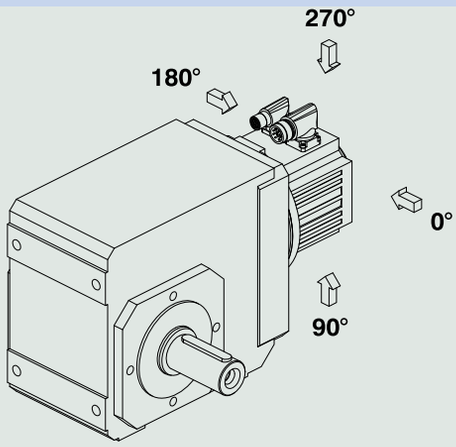	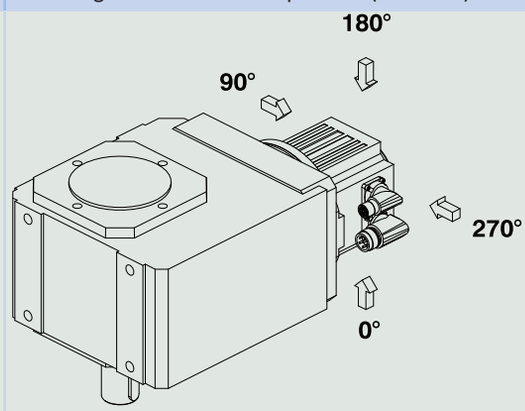

Indicate variations for your geared motor in the order.

Note that the plug connector position rotates along with the geared motor if the geared motor is in another mounting position.

16.5.8 Other product features

Feature	Value
Max. permitted gearbox temperature (on the surface of the gearbox)	≤ 80 °C
Paint	Black RAL 9005
Explosion-proof design in accordance with (ATEX) Directive 2014/34/EU (optional)	Not available
Efficiency:	
η_{get} two-stage	97%
η_{get} three-stage	96%
η_{get} four-stage	94%
Protection class:[1]	
Gearbox	IP65
Motor	IP56, optionally IP66

16.5.9 Maintenance

The instructions for maintenance can be found in the operating manual, ID 443027_en, at http://www.stoeber.de/en/downloads/. Enter the ID of the documentation in the Search... field.

Ventilation

Air release valves are fitted as a standard feature and independently of installation position for gearbox sizes K5 to K10.

For the position and dimensions of the air release valve, refer to the 3D model.

Download the 3D model at https://configurator.stoeber.de/en-US/.

[1] Observe the protection class of all the components.

16.5.10 Direction of rotation

Solid shaft (V), solid shaft on both sides (V), hollow shaft with keyway (A)

Type	Output side 4	Output side 3
K102 – K402	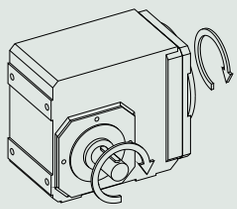	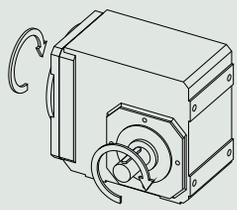
K203 – K403	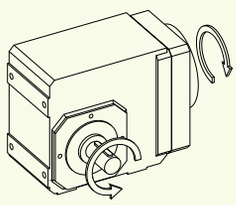	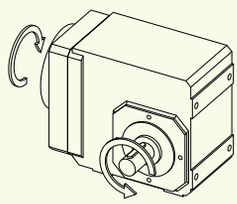
K513 – K1013	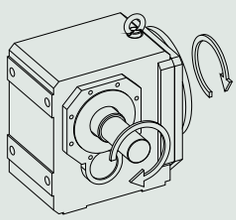	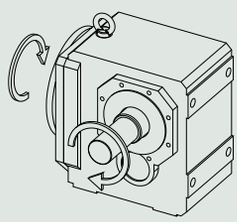
K514 – K1014	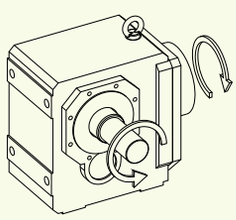	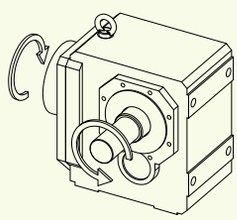

The specified directions of rotation also apply to gearboxes with hollow shaft (A) if the entry side of the machine shaft corresponds to the side of the solid shaft that is shown.

The direction of rotation for the shaft design of a solid shaft on both sides corresponds to the direction of rotation for output side 4.

The pictures show mounting position EL1.

Hollow shaft with shrink ring (S)

Type	Shrink ring side 4	Shrink ring side 3
K102 – K402	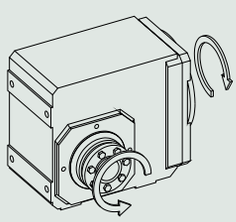	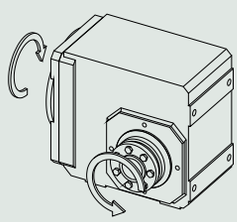
K203 – K403	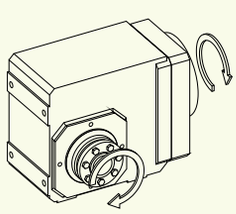	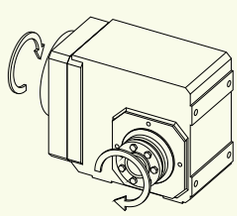

Type	Shrink ring side 4	Shrink ring side 3
K513 – K813	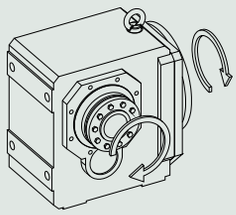	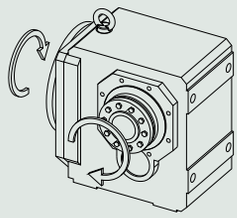
K514 – K814	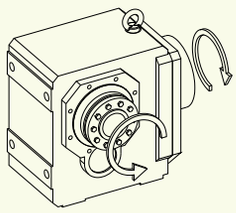	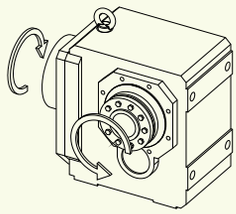
K913 – K1013	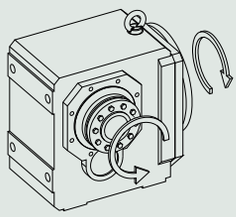	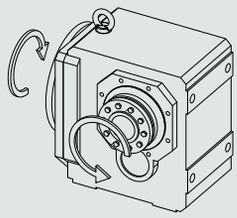
K914 – K1014	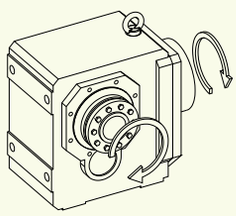	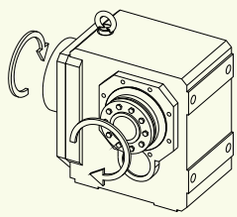

The pictures show mounting position EL1.

16.6 Project configuration

Project your drives using our SERVOsoft designing software. Download SERVOsoft free of charge after registration at https://www.stoeber.de/en/services/info-servosoft/.

It is the most convenient and reliable method of drive selection, as the entire torque/speed curve of the application is displayed and evaluated here in the curve of the geared motor.

In this chapter, only limit values for specific operating points can be taken into consideration for manual drive selection.

An explanation of the formula symbols can be found in Chapter [▷ 20.1].

The formula symbols for values actually present in the application are marked with *.

16.6.1 Drive selection

Drive selection for gearboxes

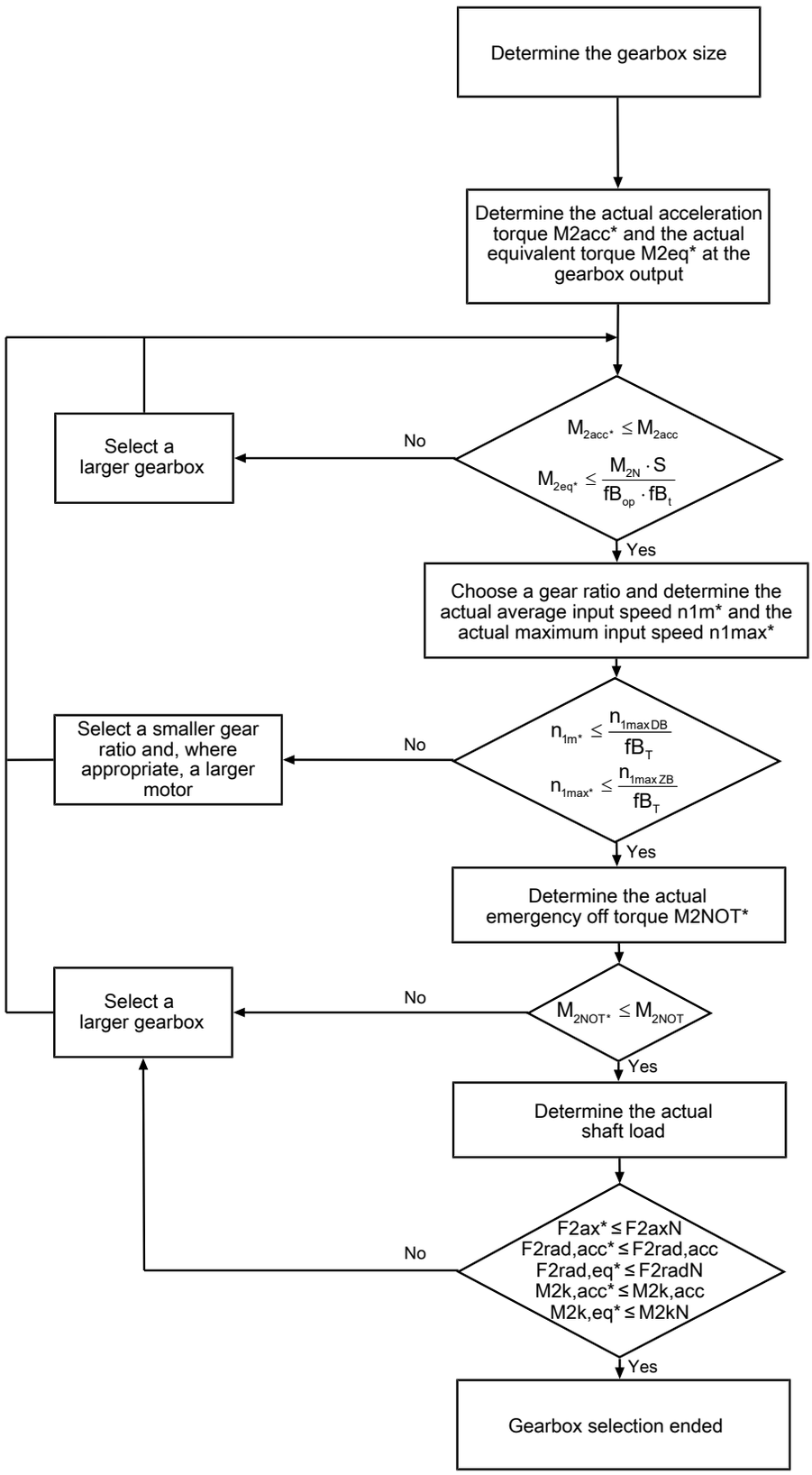

Calculate the forces and tilting torques in the chapter Permitted shaft loads.

Refer to the selection tables for the values for i, n_{1maxDB}, n_{1maxZB}, M_{2acc}, M_{2NOT}, M_{2N} and S.

The values for fB_T, fB_{op} and fB_t can be found in the corresponding tables in this chapter.

Drive selection for motors

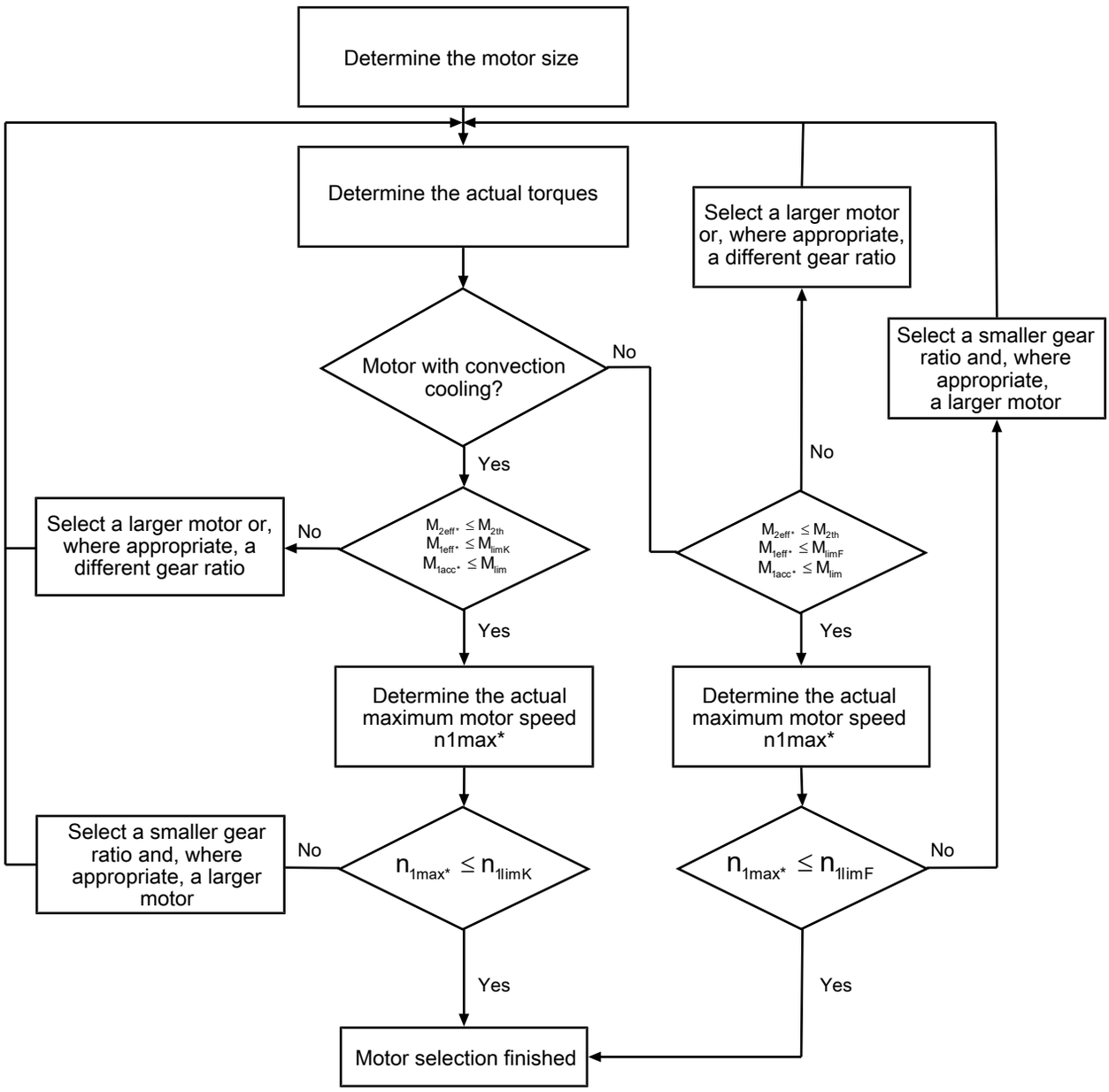

The value for M_{lim}, M_{limK}, M_{limF}, n_{1limK} and n_{1limF} can be found in the motor characteristic curve in the chapter [▷ 17.3]. Note the size, nominal speed n_N and cooling type of the motor.

Example of cyclic operation

The following calculations are based on a representation of the power taken from the output based in accordance with the following example:

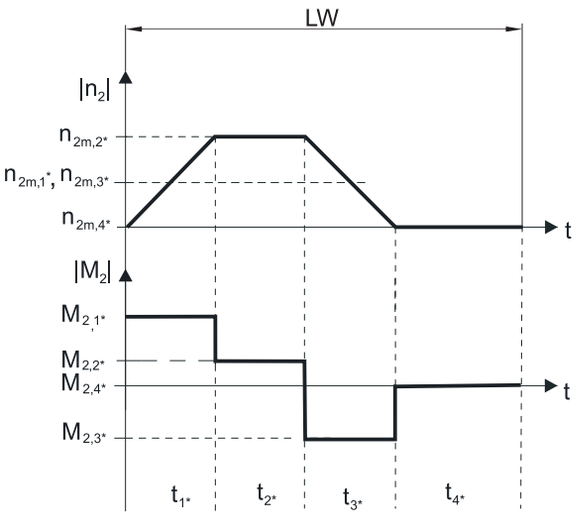

Calculation of the actual maximum acceleration torques

$$M_{2acc*} = J_{tot} \cdot \frac{\Delta n_2}{9{,}55 \cdot \Delta t} + M_{L*}$$

$$M_{1acc*} = \frac{M_{2acc*}}{i \cdot \eta_{get}} + J_1 \cdot \frac{\Delta n_1}{9{,}55 \cdot \Delta t}$$

Calculation of the actual average input speed

$$n_{1m*} = n_{2m*} \cdot i$$

$$n_{2m*} = \frac{\left|n_{2m,1*}\right| \cdot t_{1*} + \ldots + \left|n_{2m,n*}\right| \cdot t_{n*}}{t_{1*} + \ldots + t_{n*}}$$

If $t_{1*} + \ldots + t_{3*} \geq 6$ min, calculate n_{2m*} without the rest phase t_{4*}.

The values for the ratio i can be found in the selection tables.

Calculation of the actual effective torque

$$M_{2eff*} = \sqrt{\frac{t_{1*} \cdot M_{2,1*}{}^2 + \ldots + t_{n*} \cdot M_{2,n*}{}^2}{t_{1*} + \ldots + t_{n*}}}$$

Calculation of the actual emergency off torque

$$M_{2NOT*} = J_{tot} \cdot \frac{\Delta n_2}{9.55 \cdot \Delta t} + M_{L*}$$

Calculation of the actual equivalent torque

$$M_{2eq*} = \sqrt[3]{\frac{\left|n_{2m,1*}\right| \cdot t_{1*} \cdot \left|M_{2,1*}{}^3\right| + \ldots + \left|n_{2m,n*}\right| \cdot t_{n*} \cdot \left|M_{2,n*}{}^3\right|}{\left|n_{2m,1*}\right| \cdot t_{1*} + \ldots + \left|n_{2m,n*}\right| \cdot t_{n*}}}$$

Calculation of the thermal limit torque

Calculate the thermal limit torque M_{2th} for a duty cycle $ED_{10} > 50\%$ and the actual average input speed n_{1m*}. (At $K_{mot,th} \leq 0$ you must reduce the average input speed n_{1m*} accordingly or select another geared motor size.)

$$M_{2th} = M_{op} \cdot i \cdot K_{mot,th}$$

$$K_{mot,th} = 0{,}95 - \frac{a_{th}}{1000} \cdot athEL \cdot fB_T \cdot \left(\frac{n_{1m*}}{1000}\right)^2$$

The values for i and a_{th} can be found in the selection tables.

The values for a_{thEL} and fB_T can be found in the corresponding tables in this chapter.

The value for the torque of the motor at operating point M_{op} with the determined average input speed n_{1m*} can be found in the motor characteristic curve in the chapter [▶ 17.3]. Note the size, nominal speed n_N and cooling type of the motor. The figure below shows an example of reading the torque M_{op} of a motor with convection cooling at the operating point.

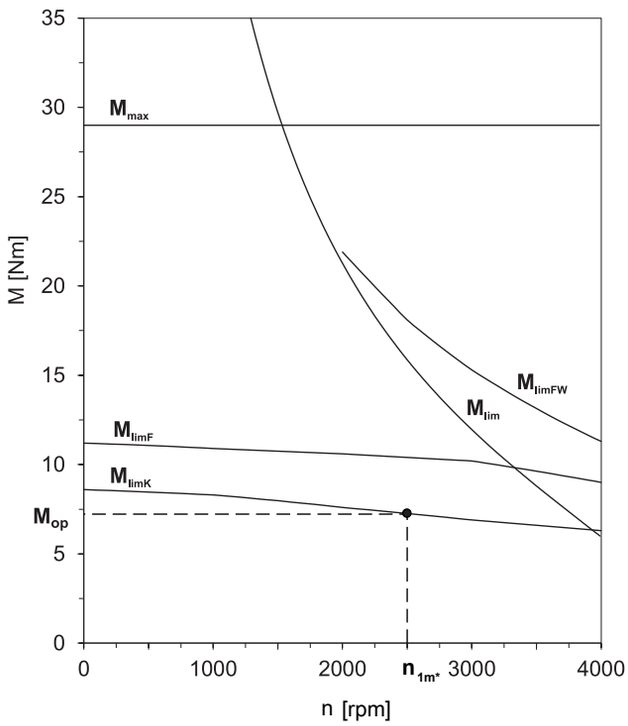

Operating factors

Parameter a_{thEL}

Mounting position	a_{thEL}
EL1, 2	1.0
EL3, 4, 5, 6	1.1

Operating mode	fB_{op}
Uniform continuous operation	1.00
Cyclic operation	1.25
Reversing load cyclic operation	1.40

Run time	fB_t
Daily runtime ≤ 8 h	1.00
Daily runtime ≤ 16 h	1.15
Daily runtime ≤ 24 h	1.20

Temperature		fB_T
Motor cooling	**Surrounding temperature**	
Motor with forced ventilation	≤ 20 °C	0.9
	≤ 30 °C	1.0
	≤ 40 °C	1.15
Motor with convection cooling	≤ 20 °C	1.0
	≤ 30 °C	1.1
	≤ 40 °C	1.25

Notes

- The maximum permitted gearbox temperature (see the "Other product features" chapter) must not be exceeded. Doing so may result in damage to the geared motor.
- For braking from full speed (for example when the power fails or when setting up the machine), note the permitted gearbox torques (M_{2acc}, M_{2NOT}) in the selection tables.

16.6.2 Permitted shaft loads for the output shaft

The values specified in the tables apply to the permitted shaft loads:

- For shaft dimensions in accordance with the catalog
- For output speeds $n_{2m*} \leq 20$ rpm ($F_{2axN} = F_{2ax20}$; $F_{2radN} = F_{2rad20}$; $M_{2kN} = M_{2k20}$)
- Only if radial forces on the gearbox are stabilized by its pilots for the pitch circle diameter and flange housing design

16.6.2.1 V shaft design

Permitted shaft loads for V shaft design (solid shaft)

Type	z_2 [mm]	F_{2ax20} [N]	F_{2rad20} [N]	$F_{2rad,acc}$ [N]	M_{2k20} [Nm]	$M_{2k,acc}$ [Nm]
K1	40.0	1900	5000	5000	325	325
K2	42.0	2100	6000	6000	430	430
K3	45.0	2400	7000	7000	525	525
K4	52.0	3500	11200	11200	1050	1050
K5	72.0	3500	13450	13450	1580	1580
K6	72.0	4000	16000	16000	1960	1960
K7	85.0	5500	22000	22000	3200	3200
K8	60.0	7250	29000	29000	3800	3800
K9	87.0	16500	65000	65000	11200	11200
K10	84.0	25000	80000	80000	15200	15200

Reduced values apply in the case of a V shaft design (solid shaft) in conjunction with an NF housing design (foot + round flange):

Type	z_2 [mm]	F_{2ax20} [N]	F_{2rad20} [N]	$F_{2rad,acc}$ [N]	M_{2k20} [Nm]	$M_{2k,acc}$ [Nm]
K10	132.0	25000	64000	64000	15200	15200

For the V solid shaft design on both sides, the values for F_{2rad20} and M_{2k20} must be multiplied by a factor of 0.7.

For other output speeds, download diagrams at https://configurator.stoeber.de/en-US/.

The following applies to output speeds $n_{2m*} > 20$ rpm:

$$F_{2axN} = \frac{F_{2ax20}}{\sqrt[3]{\frac{n_{2m*}}{20\ \text{rpm}}}} \qquad F_{2radN} = \frac{F_{2rad20}}{\sqrt[3]{\frac{n_{2m*}}{20\ \text{rpm}}}} \qquad M_{2kN} = \frac{M_{2k20}}{\sqrt[3]{\frac{n_{2m*}}{20\ \text{rpm}}}}$$

The values for F_{2ax20}, F_{2rad20} and M_{2k20} can be found in the table "Permitted shaft loads" in this chapter.

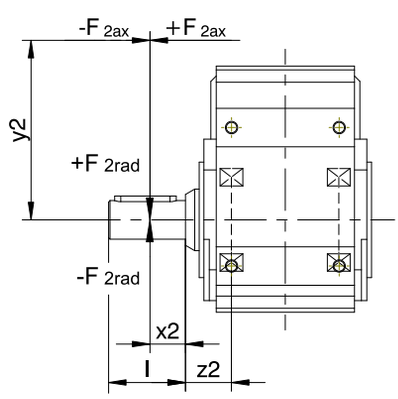

Fig. 1: Force application points for solid shaft

The specified values for F_{2rad20} and $F_{2rad,acc}$ refer to an application of force at the center of the output shaft: $x_2 = l/2$.

Shaft dimensions can be found in the "Dimensional drawings" chapter.

The following applies to other force application points:

$$M_{2k,acc^*} = \frac{2 \cdot F_{2ax^*} \cdot y_2 + F_{2rad,acc^*} \cdot (x_2 + z_2)}{1000}$$

For applications with multiple axial and/or radial forces, you must add the forces as vectors.

In the event of EMERGENCY OFF operation (max. 1000 load changes), you can multiply the permitted forces and torques for F_{2ax20}, F_{2rad20} and M_{2k20} by a factor of two.

Also note the calculation for equivalent values:

$$M_{2k,eq^*} = \sqrt[3]{\frac{|n_{2m,1^*}| \cdot t_{1^*} \cdot |M_{2k,acc,1^*}{}^3| + \ldots + |n_{2m,n^*}| \cdot t_{n^*} \cdot |M_{2k,acc,n^*}{}^3|}{|n_{2m,1^*}| \cdot t_{1^*} + \ldots + |n_{2m,n^*}| \cdot t_{n^*}}}$$

$$F_{2rad,eq^*} = \sqrt[3]{\frac{|n_{2m,1^*}| \cdot t_{1^*} \cdot |F_{2rad,acc,1^*}{}^3| + \ldots + |n_{2m,n^*}| \cdot t_{n^*} \cdot |F_{2rad,acc,n^*}{}^3|}{|n_{2m,1^*}| \cdot t_{1^*} + \ldots + |n_{2m,n^*}| \cdot t_{n^*}}}$$

16.6.2.2 A and S shaft design

Permitted shaft loads for A shaft design (hollow shaft with keyway)

Type	z_2 [mm]	F_{2ax20} [N]	F_{2rad20} [N]	$F_{2rad,acc}$ [N]	M_{2k20} [Nm]	$M_{2k,acc}$ [Nm]
K1	40.0	1900	5000	5000	240	240
K2	42.0	2100	6000	6000	310	310
K3	45.0	2400	7000	7000	380	380
K4	52.0	3500	11200	11200	740	740
K5	39.0	2500	13450	13450	1000	1000
K6	42.0	3000	16000	16000	1300	1300
K7	45.0	4100	22000	22000	2100	2100
K8	50.0	5300	29000	29000	2600	2600
K9	56.0	7000	65000	65000	3600	3600
K10	56.0	9000	80000	80000	5000	5000

Permitted shaft loads for S shaft design (hollow shaft with shrink ring)

Type	z_2 [mm]	F_{2ax20} [N]	F_{2rad20} [N]	$F_{2rad,acc}$ [N]	M_{2k20} [Nm]	$M_{2k,acc}$ [Nm]
K1	40.0	1900	5000	5000	240	240
K2	42.0	2100	6000	6000	310	310
K3	45.0	2400	7000	7000	380	380
K4	52.0	3500	11200	11200	740	740
K5	39.0	2500	13450	13450	1000	1000
K6	42.0	3000	16000	16000	1300	1300
K7	45.0	4100	22000	22000	2100	2100
K8	50.0	5300	29000	29000	2600	2600
K9	56.0	7000	65000	65000	3600	3600
K10	56.0	9000	80000	80000	5000	5000

For other output speeds, download diagrams at https://configurator.stoeber.de/en-US/.

The following applies to output speeds $n_{2m^*} > 20$ rpm:

$$F_{2axN} = \frac{F_{2ax20}}{\sqrt[3]{\frac{n_{2m^*}}{20\ \text{rpm}}}} \qquad F_{2radN} = \frac{F_{2rad20}}{\sqrt[3]{\frac{n_{2m^*}}{20\ \text{rpm}}}} \qquad M_{2kN} = \frac{M_{2k20}}{\sqrt[3]{\frac{n_{2m^*}}{20\ \text{rpm}}}}$$

The values for F_{2ax20}, F_{2rad20} and M_{2k20} can be found in the table "Permitted shaft loads" in this chapter.

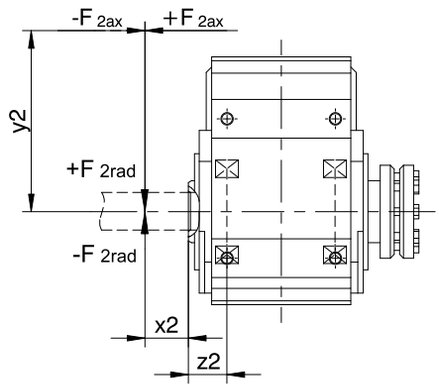

Fig. 2: Force application points for hollow shaft

You can determine the permitted radial forces from the permitted tilting torque M_{2kN} and $M_{2k,acc}$. The actual radial forces may not exceed the permitted radial forces. The permitted radial forces pertain to the shaft end (x2 = 0).

$$M_{2k,acc^*} = \frac{2 \cdot F_{2ax^*} \cdot y_2 + F_{2rad,acc^*} \cdot (x_2 + z_2)}{1000}$$

For applications with multiple axial and/or radial forces, you must add the forces as vectors.

In the event of EMERGENCY OFF operation (max. 1000 load changes), you can multiply the permitted forces and torques for F_{2ax20}, F_{2rad20} and M_{2k20} by a factor of two.

Also note the calculation for equivalent values:

$$M_{2k,eq^*} = \sqrt[3]{\frac{|n_{2m,1^*}| \cdot t_{1^*} \cdot |M_{2k,acc,1^*}{}^3| + \ldots + |n_{2m,n^*}| \cdot t_{n^*} \cdot |M_{2k,acc,n^*}{}^3|}{|n_{2m,1^*}| \cdot t_{1^*} + \ldots + |n_{2m,n^*}| \cdot t_{n^*}}}$$

$$F_{2rad,eq^*} = \sqrt[3]{\frac{|n_{2m,1^*}| \cdot t_{1^*} \cdot |F_{2rad,acc,1^*}{}^3| + \ldots + |n_{2m,n^*}| \cdot t_{n^*} \cdot |F_{2rad,acc,n^*}{}^3|}{|n_{2m,1^*}| \cdot t_{1^*} + \ldots + |n_{2m,n^*}| \cdot t_{n^*}}}$$

16.6.3 Radial shaft seal rings

Leak-proofness

Our gearboxes are equipped with high-quality radial shaft seal rings and checked for leaks. However, a leak cannot be fully ruled out over the length of use of a gearbox. If you use a gearbox with goods incompatible with the lubricant, you must take measures to prevent direct contact with the gearbox lubricant in case of a leak.

16.6.4 Oil expansion tank

The gearboxes have a higher fill level in mounting position EL5. The oil expansion tank prevents oil from escaping out of the gearbox.

Notes

- We recommend using an oil expansion tank in mounting position EL5 (additional cost) for fast running gearboxes with an input speed n_1 > 1750 rpm and gear ratios i < 20.
- It is not possible to use an oil expansion tank if the plug connector is at 90°!
- The oil expansion tank can only be used with certain sizes; see the chapter [▷ 16.3.17]

16.7 Additional documentation

Additional documentation related to the product can be found at
http://www.stoeber.de/en/downloads/

Enter the ID of the documentation in the Search term field.

Documentation	ID
Operating manual gearboxes, geared motors K	443364_en
Operating manual for EZ synchronous servo motors	443032_en

17 EZ synchronous servo motors

Table of contents

17.1 Overview 560

17.2 Selection tables 561

17.2.1 EZ motors with convection cooling 562

17.2.2 EZ motors with forced ventilation 563

17.3 Torque/speed curves 564

17.4 Dimensional drawings 574

17.4.1 EZ2 – EZ3 motors (One Cable Solution) 574

17.4.2 EZ2 – EZ3 motors with convection cooling 575

17.4.3 EZ4 – EZ7 motors with convection cooling (One Cable Solution) 576

17.4.4 EZ4 – EZ8 motors with convection cooling 577

17.4.5 EZ4 – EZ7 motors with forced ventilation (One Cable Solution) 578

17.4.6 EZ4 – EZ8 motors with forced ventilation 579

17.5 Type designation 580

17.5.1 Nameplate 581

17.6 Product description 582

17.6.1 General features 582

17.6.2 Electrical features 582

17.6.3 Ambient conditions 582

17.6.4 Encoders 583

17.6.5 Temperature sensor 585

17.6.6 Cooling 587

17.6.7 Holding brake 588

17.6.8 Connection method 590

17.7 Project configuration 596

17.7.1 Drive selection 597

17.7.2 Permitted shaft loads 598

17.7.3 Derating 600

17.8 Further information 601

17.8.1 Directives and standards 601

17.8.2 Identifiers and test symbols 601

17.8.3 Additional documentation 601

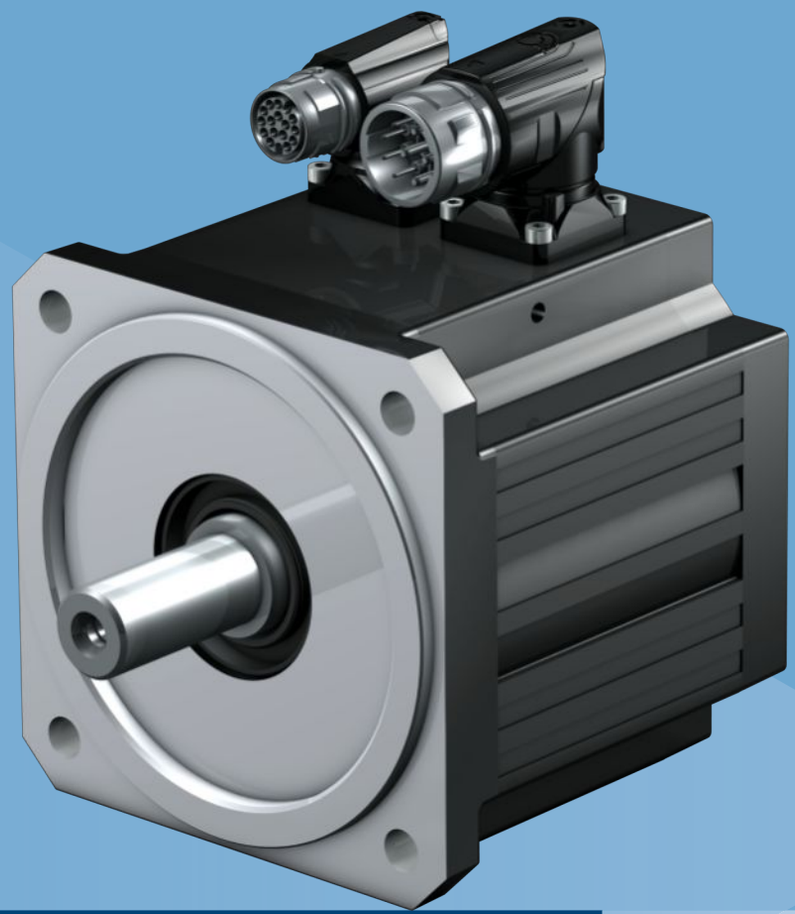

17 Synchronous servo motors EZ

17.1 Overview

Synchronous servo motors with tooth winding

Features

High dynamics	✓
Short length	✓
Super compact due to tooth-coil winding method with the highest possible copper fill factor	✓
Backlash-free holding brake (optional)	✓
Electronic nameplate for fast and reliable commissioning	✓
Convection cooling or forced ventilation (optional)	✓
Optical, inductive EnDat absolute encoders or resolvers	✓
Elimination of referencing with multi-turn absolute encoders (optional)	✓
One Cable Solution (OCS) with EnDat 3 encoder (optional)	✓
Rotatable plug connectors with quick lock	✓

Torques

M_N	0.4 – 91 Nm
M_0	0.44 – 100 Nm

17.2 Selection tables

The technical data specified in the selection tables applies to:

- Installation altitudes up to 1000 m above sea level
- Surrounding temperatures from −15 °C to +40 °C
- Operation on a STOBER drive controller
- DC link voltage U_{ZK} = DC 540 V
- Coating: RAL 9005 Jet black, matte

In addition, the technical data applies to an uninsulated design with the following thermal mounting conditions:

Type	Dimensions of steel mounting flange (thickness x width x height)	Convection surface area Steel mounting flange
EZ2 – EZ5	23 x 210 x 275 mm	0.14 m^2
EZ7 – EZ8	28 x 300 x 400 mm	0.3 m^2

Note the differing ambient conditions in Chapter [▷ 17.7.3]

Formula symbols

An explanation of the formula symbols can be found in Chapter [▷ 20.1].

Observe the additional information on the following formula symbols:

- I_0 = RMS value of the line-to-line current when stall torque M_0 is generated (tolerance ±5%).
- I_{max} = RMS value of the short-term maximum permitted line-to-line current when maximum torque M_{max} is generated (tolerance ±5%). Exceeding I_{max} may lead to irreversible damage (demagnetization) of the rotor.
- I_N = RMS value of the line-to-line current when nominal torque M_N is generated at the nominal point (tolerance ±5%).
- M_0 = Torque that a motor is continuously able to deliver at a speed of 10 rpm (tolerance ±5%). At a speed of 0 rpm, a minor continuous torque has to be taken into account. Contact your STOBER customer advisor for such an application.

17.2.1 EZ motors with convection cooling

Type	K_{EM} [V/1000 min^{-1}]	n_N [rpm]	M_N [Nm]	I_N [A]	$K_{M,N}$ [Nm/A]	P_N [kW]	M_0 [Nm]	I_0 [A]	K_{M0} [Nm/A]	M_R [Nm]	M_{max} [Nm]	I_{max} [A]	R_{U-V} [Ω]	L_{U-V} [mH]	T_{el} [ms]	J_{dyn} [kgcm²]	m_{dyn} [kg]
EZ202U	40	6000	0.40	0.99	0.41	0.25	0.44	1.03	0.45	0.03	1.48	3.48	26.00	15.80	0.61	0.13	1.43
EZ203U	40	6000	0.61	1.54	0.40	0.38	0.69	1.64	0.44	0.03	2.70	5.80	13.20	10.30	0.76	0.17	1.67
EZ301U	40	6000	0.89	1.93	0.46	0.56	0.95	2.02	0.49	0.04	2.80	12.7	11.70	39.80	3.40	0.19	1.50
EZ301U	40	3000	0.93	1.99	0.47	0.29	0.95	2.02	0.49	0.04	2.80	12.7	11.70	39.80	3.40	0.19	1.50
EZ302U	42	6000	1.50	3.18	0.47	0.94	1.68	3.48	0.49	0.04	5.00	17.8	4.50	18.70	4.16	0.29	2.10
EZ302U	86	3000	1.59	1.60	0.99	0.50	1.68	1.67	1.03	0.04	5.00	8.55	17.80	75.00	4.21	0.29	2.10
EZ303U	55	6000	1.96	3.17	0.62	1.2	2.25	3.55	0.65	0.04	7.00	16.9	4.90	21.10	4.31	0.40	2.60
EZ303U	109	3000	2.07	1.63	1.27	0.65	2.19	1.71	1.30	0.04	7.00	8.25	20.30	68.70	5.24	0.40	2.60
EZ401U	47	6000	2.30	4.56	0.50	1.4	2.80	5.36	0.53	0.04	8.50	33.0	1.94	11.52	5.94	0.93	4.00
EZ401U	96	3000	2.80	2.74	1.02	0.88	3.00	2.88	1.06	0.04	8.50	16.5	6.70	37.70	5.63	0.93	4.00
EZ402U	60	6000	3.50	5.65	0.62	2.2	4.90	7.43	0.66	0.04	16.0	43.5	1.20	8.88	7.40	1.63	5.10
EZ402U	94	3000	4.70	4.40	1.07	1.5	5.20	4.80	1.09	0.04	16.0	26.5	3.00	21.80	7.26	1.63	5.10
EZ404U	78	6000	5.80	7.18	0.81	3.6	8.40	9.78	0.86	0.04	29.0	51.0	0.89	7.07	7.94	2.98	7.20
EZ404U	116	3000	6.90	5.80	1.19	2.2	8.60	6.60	1.31	0.04	29.0	35.0	1.85	15.00	8.11	2.98	7.20
EZ501U	68	6000	3.40	4.77	0.71	2.1	4.40	5.80	0.77	0.06	16.0	31.0	2.10	12.10	5.76	2.90	5.00
EZ501U	97	3000	4.30	3.74	1.15	1.4	4.70	4.00	1.19	0.06	16.0	22.0	3.80	23.50	6.18	2.90	5.00
EZ502U	72	6000	5.20	7.35	0.71	3.3	7.80	9.80	0.80	0.06	31.0	59.0	0.76	5.60	7.37	5.20	6.50
EZ502U	121	3000	7.40	5.46	1.36	2.3	8.00	5.76	1.40	0.06	31.0	33.0	2.32	16.80	7.24	5.20	6.50
EZ503U	84	6000	6.20	7.64	0.81	3.9	10.6	11.6	0.92	0.06	43.0	63.5	0.62	5.00	8.06	7.58	8.00
EZ503U	119	3000	9.70	6.90	1.41	3.1	11.1	7.67	1.46	0.06	43.0	41.0	1.25	10.00	8.00	7.58	8.00
EZ505U	103	4500	9.50	8.94	1.06	4.5	15.3	13.4	1.15	0.06	67.0	73.0	0.50	4.47	8.94	12.2	10.9
EZ505U	141	3000	13.5	8.80	1.53	4.2	16.0	10.0	1.61	0.06	67.0	52.0	0.93	8.33	8.96	12.2	10.9
EZ701U	76	6000	5.20	6.68	0.78	3.3	7.90	9.38	0.87	0.24	20.0	31.0	0.87	8.13	9.34	8.50	8.30
EZ701U	95	3000	7.40	7.20	1.03	2.3	8.30	8.00	1.07	0.24	20.0	25.0	1.30	12.83	9.87	8.50	8.30
EZ702U	82	6000	7.20	8.96	0.80	4.5	14.3	16.5	0.88	0.24	41.0	60.5	0.34	3.90	11.47	13.7	10.8
EZ702U	133	3000	12.0	8.20	1.46	3.8	14.4	9.60	1.53	0.24	41.0	36.0	1.00	11.73	11.73	13.7	10.8
EZ703U	99	4500	12.1	11.5	1.05	5.7	20.0	17.8	1.14	0.24	65.0	78.0	0.36	4.42	12.28	21.6	12.8
EZ703U	122	3000	16.5	11.4	1.45	5.2	20.8	14.0	1.50	0.24	65.0	62.0	0.52	6.80	13.08	21.6	12.8
EZ705U	106	4500	16.4	14.8	1.11	7.7	30.0	25.2	1.20	0.24	104	114	0.22	2.76	12.55	34.0	18.3
EZ705U	140	3000	21.3	14.2	1.50	6.7	30.2	19.5	1.56	0.24	104	87.0	0.33	4.80	14.55	34.0	18.3
EZ813U	117	4000	25.2	19.8	1.27	11	43.7	32.8	1.34	0.30	140	130	0.13	1.20	9.09	104	35.8
EZ813U	239	2000	39.0	14.9	2.62	8.1	43.7	16.5	2.67	0.30	140	64.9	0.69	5.10	7.41	104	35.8
EZ815U	117	4000	26.1	20.9	1.25	11	67.1	50.3	1.34	0.30	200	169	0.04	0.72	18.00	167	48.4
EZ815U	239	2000	57.8	21.5	2.68	12	68.8	25.2	2.74	0.30	200	92.4	0.40	3.63	9.08	167	48.4

17.2.2 EZ motors with forced ventilation

Type	K_{EM} [V/1000 min^{-1}]	n_N [rpm]	M_N [Nm]	I_N [A]	$K_{M,N}$ [Nm/A]	P_N [kW]	M_0 [Nm]	I_0 [A]	K_{M0} [Nm/A]	M_R [Nm]	M_{max} [Nm]	I_{max} [A]	R_{U-V} [Ω]	L_{U-V} [mH]	T_{el} [ms]	J_{dyn} [kgcm²]	m_{dyn} [kg]
EZ401B	47	6000	2.90	5.62	0.52	1.8	3.50	6.83	0.52	0.04	8.50	33.0	1.94	11.52	5.94	0.93	5.40
EZ401B	96	3000	3.40	3.40	1.00	1.1	3.70	3.60	1.04	0.04	8.50	16.5	6.70	37.70	5.63	0.93	5.40
EZ402B	60	6000	5.10	7.88	0.65	3.2	6.40	9.34	0.69	0.04	16.0	43.5	1.20	8.88	7.40	1.63	6.50
EZ402B	94	3000	5.90	5.50	1.07	1.9	6.30	5.80	1.09	0.04	16.0	26.5	3.00	21.80	7.26	1.63	6.50
EZ404B	78	6000	8.00	9.98	0.80	5.0	10.5	12.0	0.88	0.04	29.0	51.0	0.89	7.07	7.94	2.98	8.60
EZ404B	116	3000	10.2	8.20	1.24	3.2	11.2	8.70	1.29	0.04	29.0	35.0	1.85	15.00	8.11	2.98	8.60
EZ501B	68	6000	4.50	6.70	0.67	2.8	5.70	7.50	0.77	0.06	16.0	31.0	2.10	12.10	5.76	2.90	7.00
EZ501B	97	3000	5.40	4.70	1.15	1.7	5.80	5.00	1.17	0.06	16.0	22.0	3.80	23.50	6.18	2.90	7.00
EZ502B	72	6000	8.20	11.4	0.72	5.2	10.5	13.4	0.79	0.06	31.0	59.0	0.76	5.60	7.37	5.20	8.50
EZ502B	121	3000	10.3	7.80	1.32	3.2	11.2	8.16	1.38	0.06	31.0	33.0	2.32	16.80	7.24	5.20	8.50
EZ503B	84	6000	10.4	13.5	0.77	6.5	14.8	15.9	1.07	0.06	43.0	63.5	0.62	5.00	8.06	7.58	10.0
EZ503B	119	3000	14.4	10.9	1.32	4.5	15.9	11.8	1.35	0.06	43.0	41.0	1.25	10.00	8.00	7.58	10.0
EZ505B	103	4500	16.4	16.4	1.00	7.7	22.0	19.4	1.14	0.06	67.0	73.0	0.50	4.47	8.94	12.2	12.9
EZ505B	141	3000	20.2	13.7	1.47	6.4	23.4	14.7	1.60	0.06	67.0	52.0	0.93	8.33	8.96	12.2	12.9
EZ701B	76	6000	7.50	10.6	0.71	4.7	10.2	12.4	0.84	0.24	20.0	31.0	0.87	8.13	9.34	8.50	11.2
EZ701B	95	3000	9.70	9.50	1.02	3.1	10.5	10.0	1.07	0.24	20.0	25.0	1.30	12.83	9.87	8.50	11.2
EZ702B	82	6000	12.5	16.7	0.75	7.9	19.3	22.1	0.89	0.24	41.0	60.5	0.34	3.90	11.47	13.7	13.7
EZ702B	133	3000	16.6	11.8	1.41	5.2	19.3	12.9	1.51	0.24	41.0	36.0	1.00	11.73	11.73	13.7	13.7
EZ703B	99	4500	19.8	20.3	0.98	9.3	27.2	24.2	1.13	0.24	65.0	78.0	0.36	4.42	12.28	21.6	15.7
EZ703B	122	3000	24.0	18.2	1.32	7.5	28.0	20.0	1.41	0.24	65.0	62.0	0.52	6.80	13.08	21.6	15.7
EZ705B	106	4500	27.7	25.4	1.09	13	39.4	32.8	1.21	0.24	104	114	0.22	2.76	12.55	34.0	21.2
EZ705B	140	3000	33.8	22.9	1.48	11	41.8	26.5	1.59	0.24	104	87.0	0.33	4.80	14.55	34.0	21.2
EZ813B	117	4000	49.5	38.1	1.30	21	62.9	46.6	1.36	0.30	140	130	0.13	1.20	9.09	104	41.8
EZ813B	239	2000	57.3	21.9	2.62	12	61.6	22.9	2.71	0.30	140	64.9	0.69	5.10	7.41	104	41.8
EZ815B	117	4000	73.6	56.2	1.31	31	90.8	65.0	1.40	0.30	200	169	0.04	0.72	18.00	167	54.4
EZ815B	239	2000	91.0	33.7	2.70	19	100	36.3	2.76	0.30	200	92.4	0.40	3.63	9.08	167	54.4

17.3 Torque/speed curves

Torque/speed curves depend on the nominal speed and/or winding design of the motor and the DC link voltage of the drive controller that is used. The following torque/speed curves apply to the DC link voltage DC 540 V.

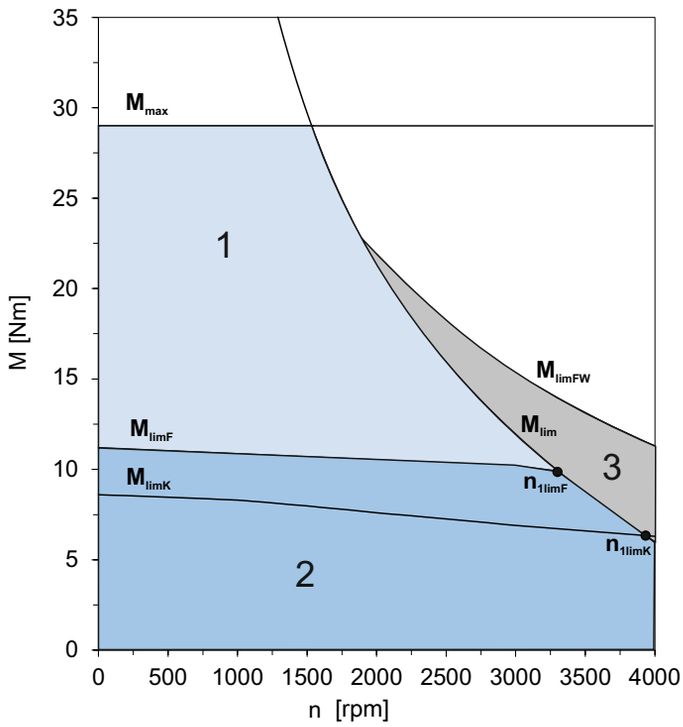

Fig. 1: Explanation of a torque/speed curve

1	Torque range for brief operation (ED_{10} < 100%) with $\Delta\vartheta$ = 100 K	2	Torque range for continuous operation with constant load (S1 mode, ED_{10} = 100%) with $\Delta\vartheta$ = 100 K
3	Field weakening range (can be used only with operation on STOBER drive controllers)		

EZ202 (n_N=6000 rpm)

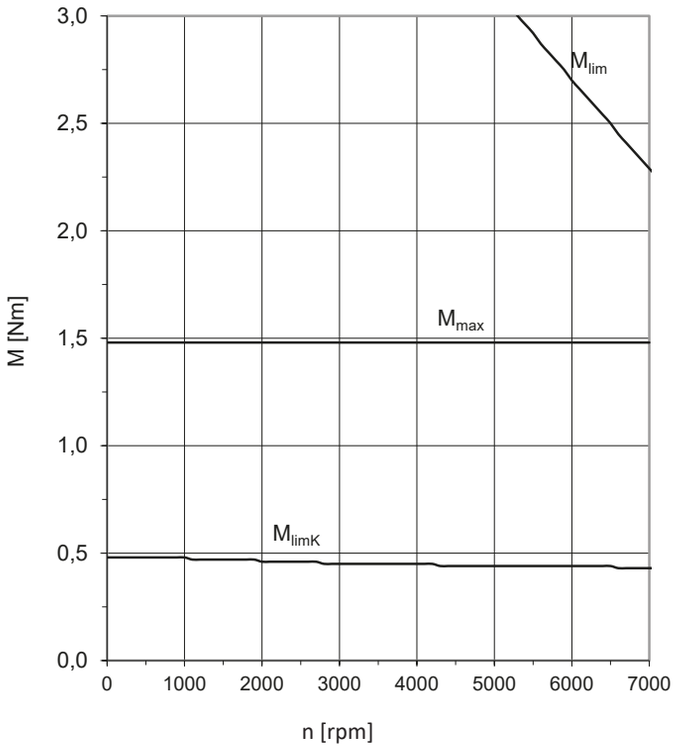

EZ203 (n_N=6000 rpm)

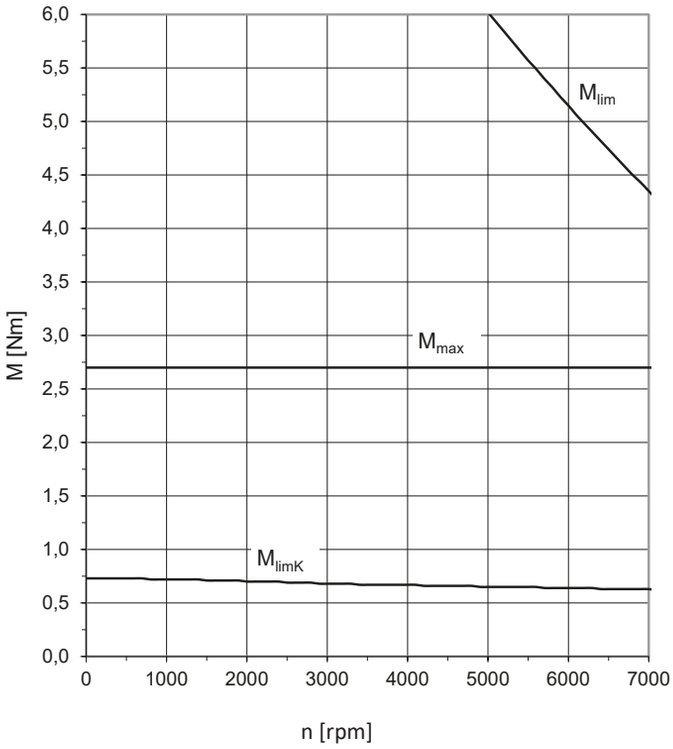

EZ301 (n_N=3000 rpm)

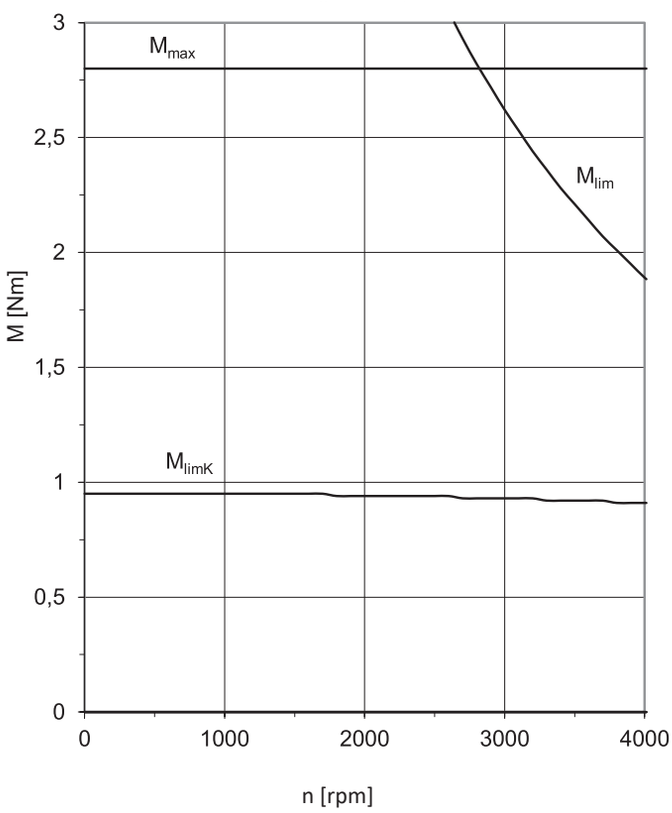

EZ301 (n_N=6000 rpm)

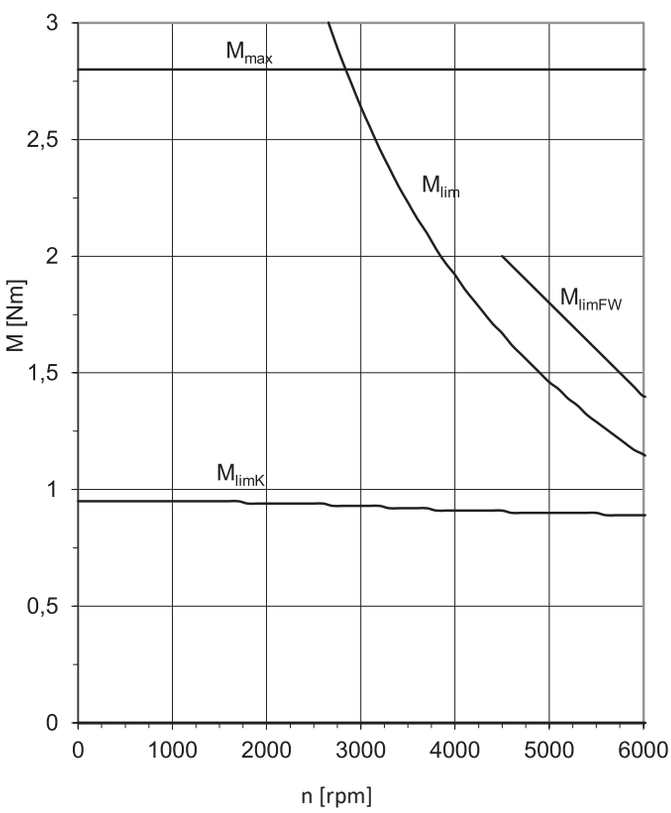

EZ302 (n_N=3000 rpm)

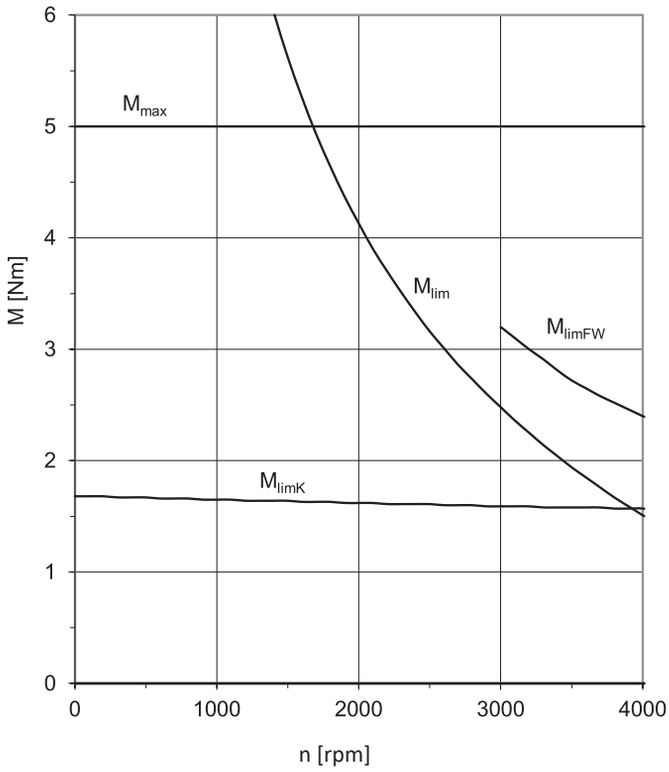

EZ302 (n_N=6000 rpm)

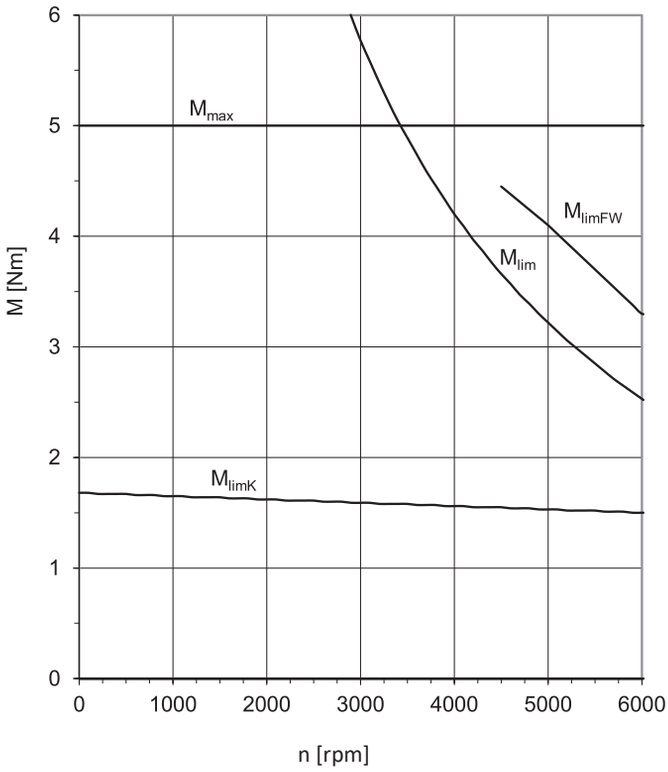

EZ303 (n_N=3000 rpm)

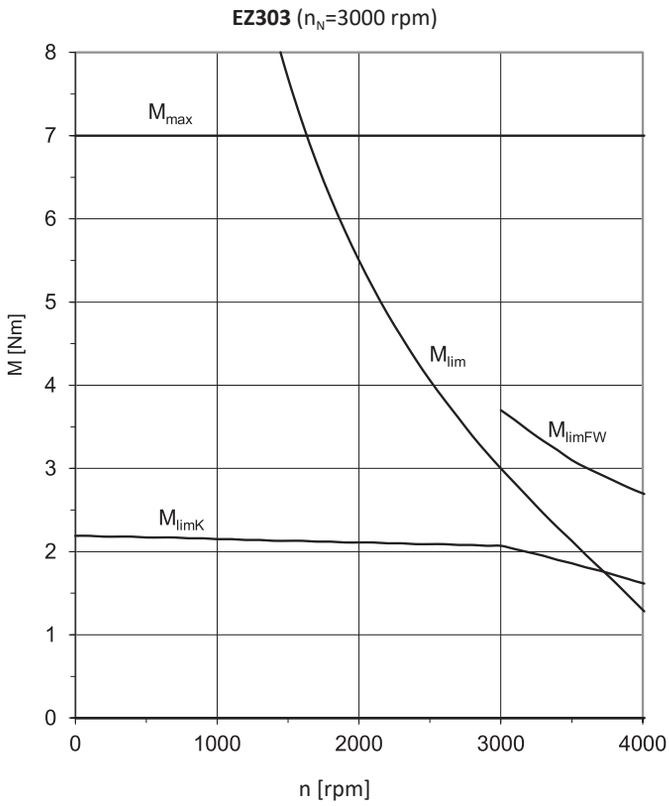

EZ303 (n_N=6000 rpm)

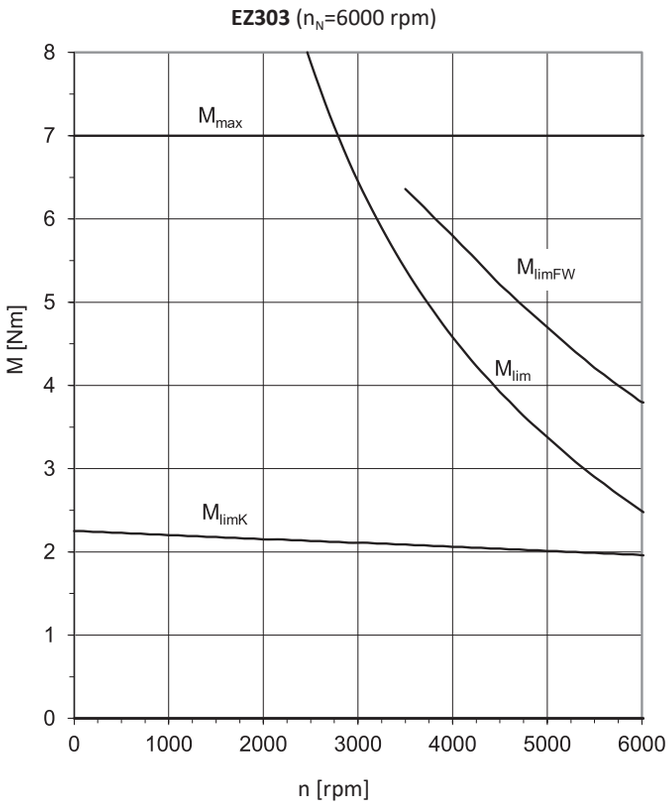

EZ401 (n_N=3000 rpm)

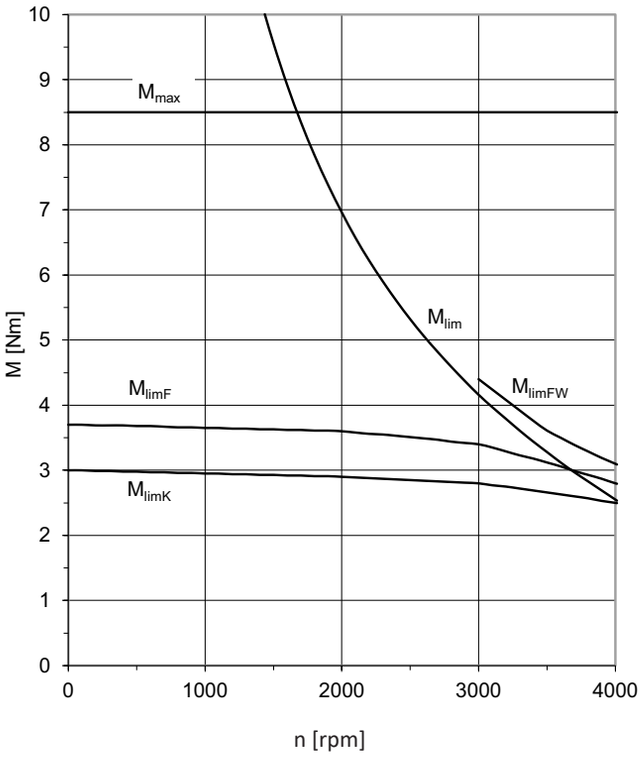

EZ401 (n_N=6000 rpm)

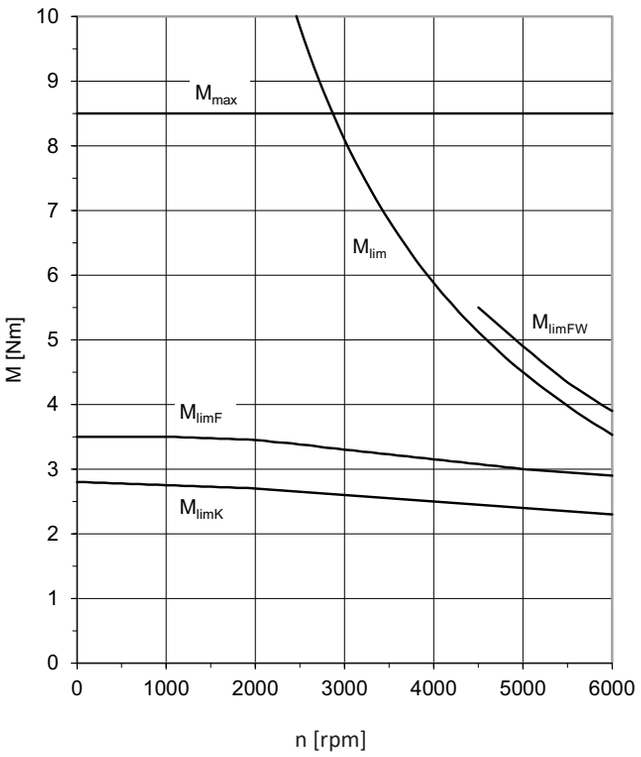

EZ402 (n_N=3000 rpm)

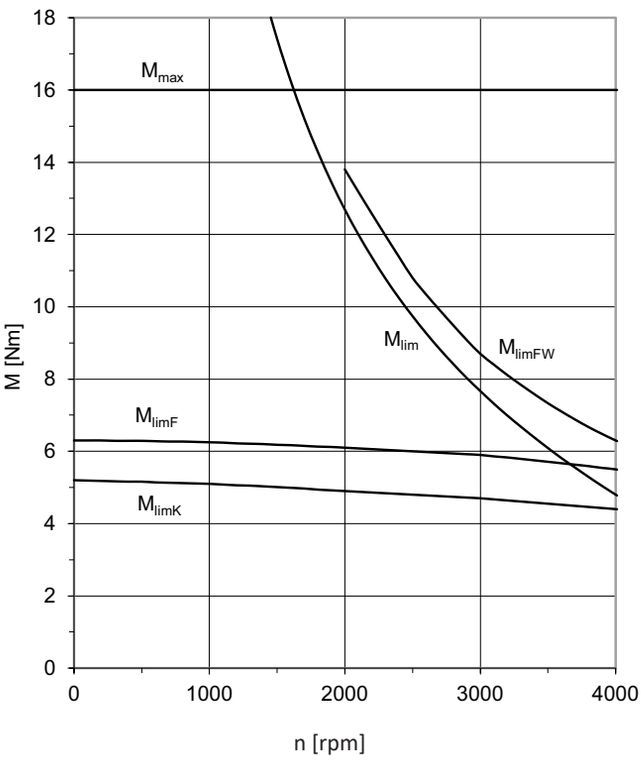

EZ402 (n_N=6000 rpm)

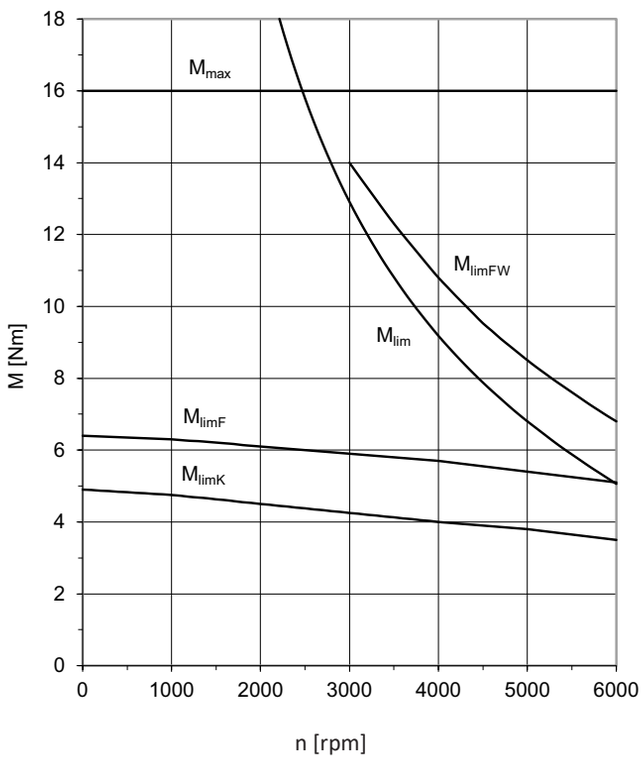

EZ404 (n_N=3000 rpm)

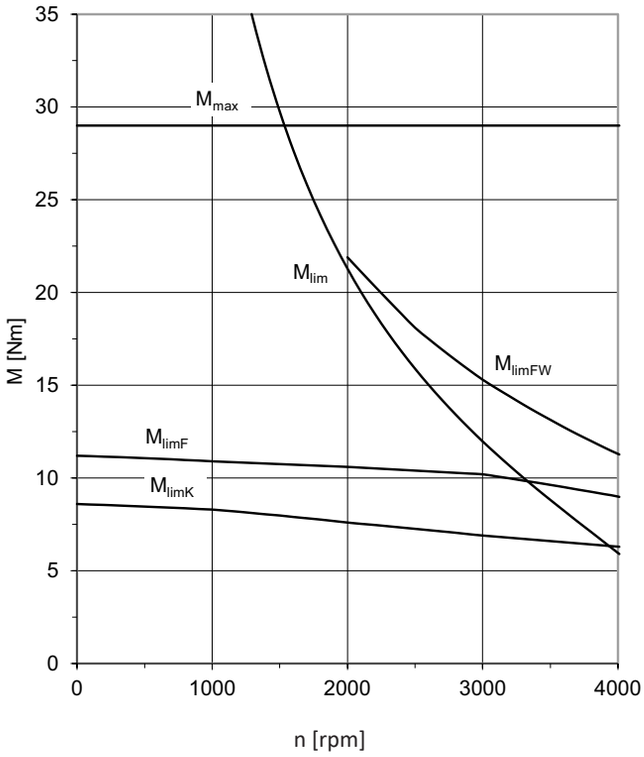

EZ404 (n_N=6000 rpm)

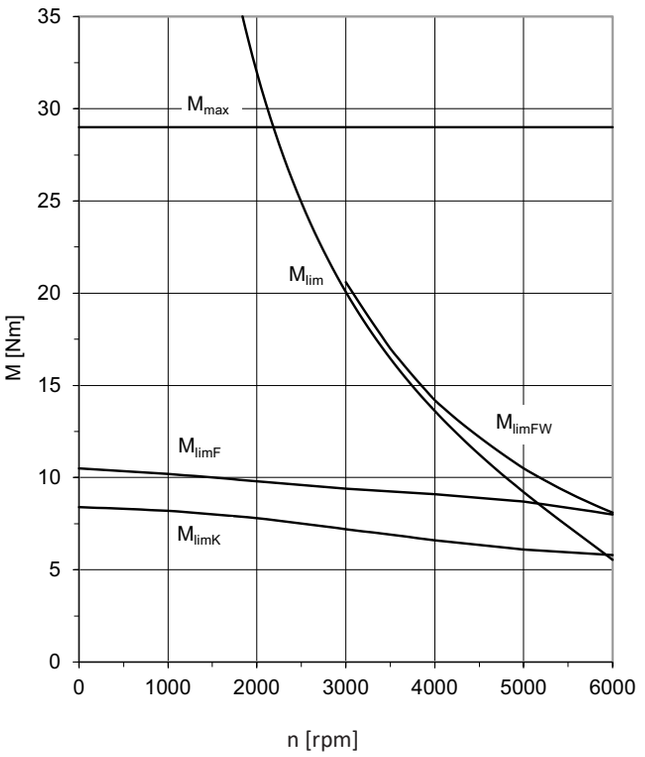

EZ501 (n_N=3000 rpm)

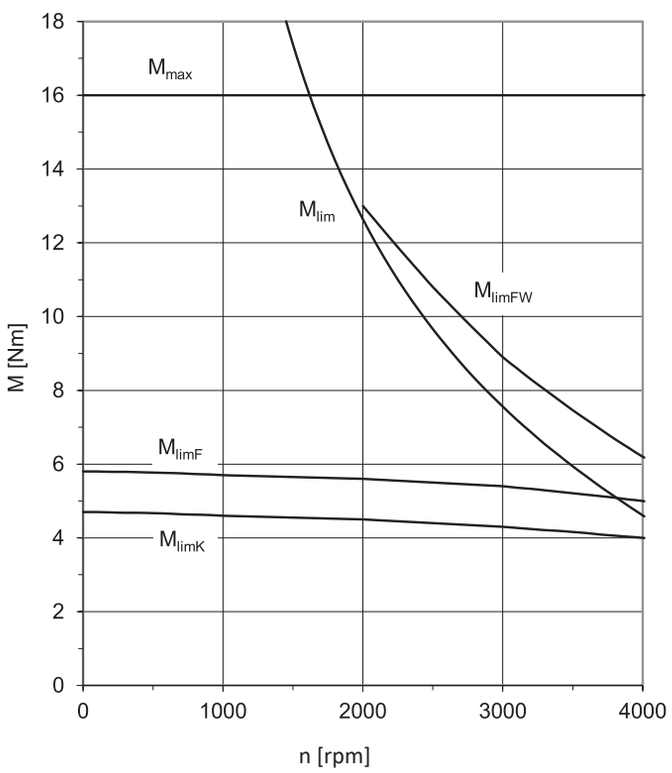

EZ501 (n_N=6000 rpm)

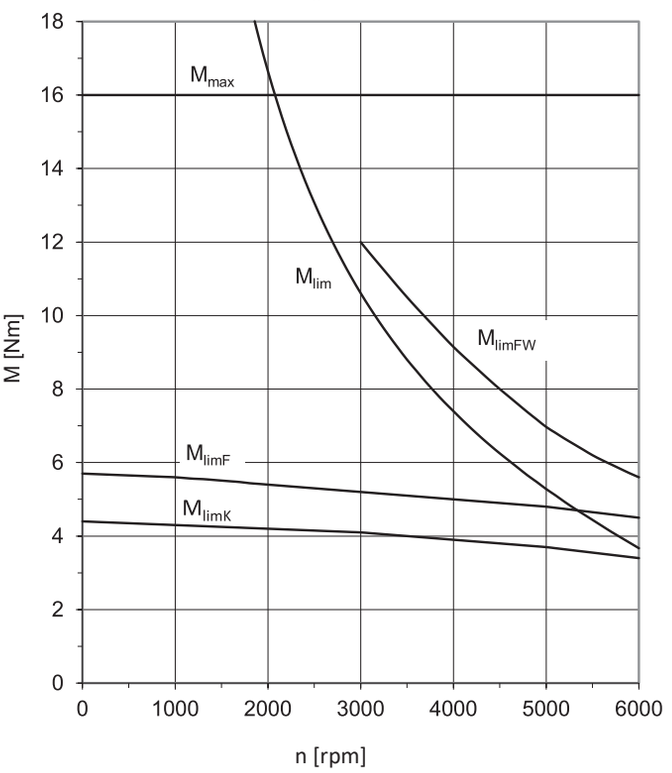

EZ502 (n_N=3000 rpm)

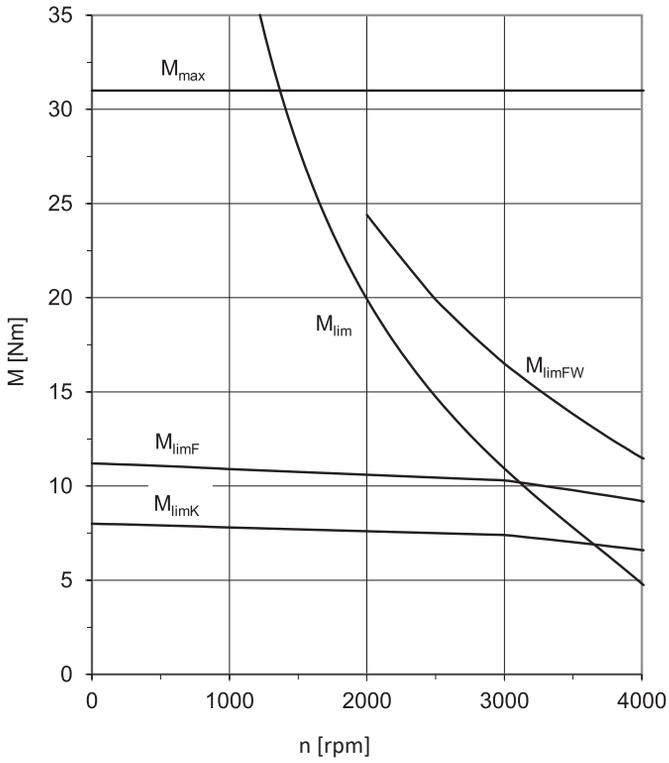

EZ502 (n_N=6000 rpm)

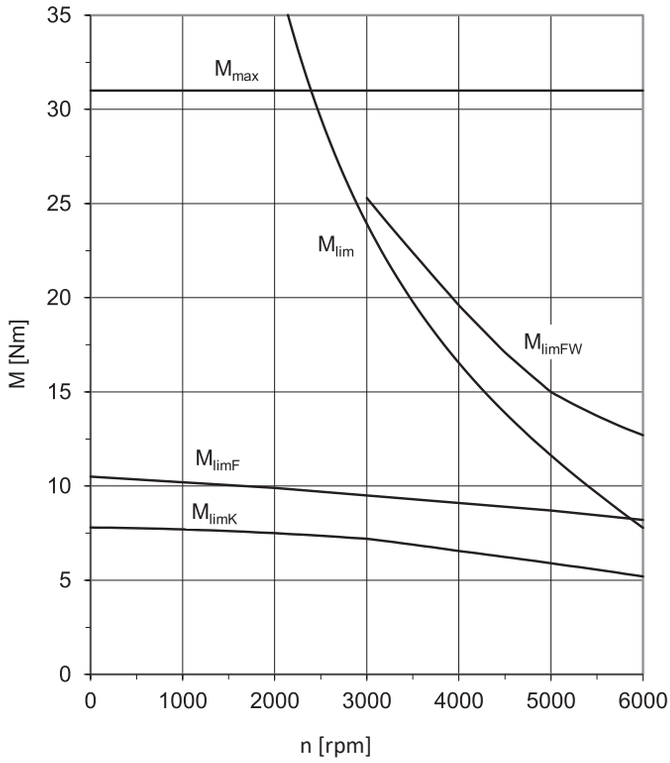

EZ503 (n_N=3000 rpm)

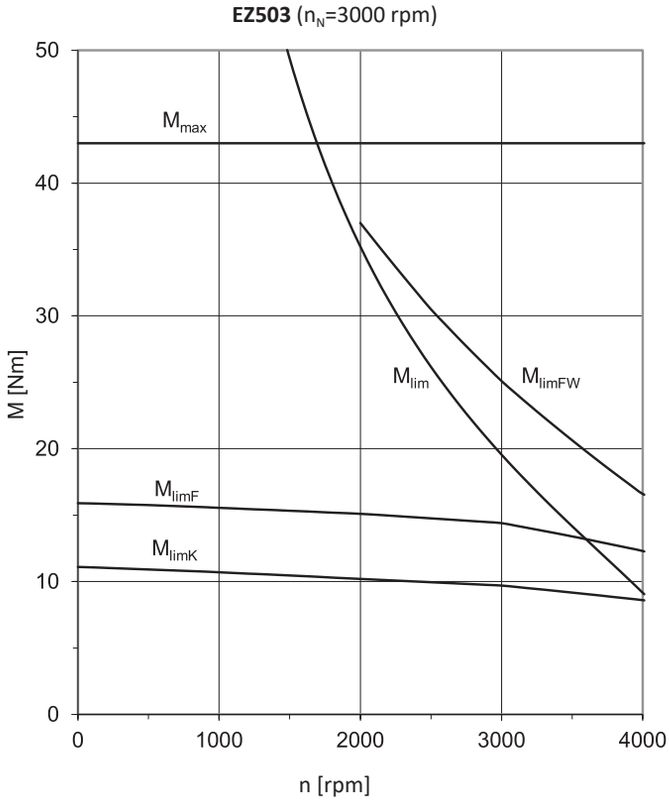

EZ503 (n_N=6000 rpm)

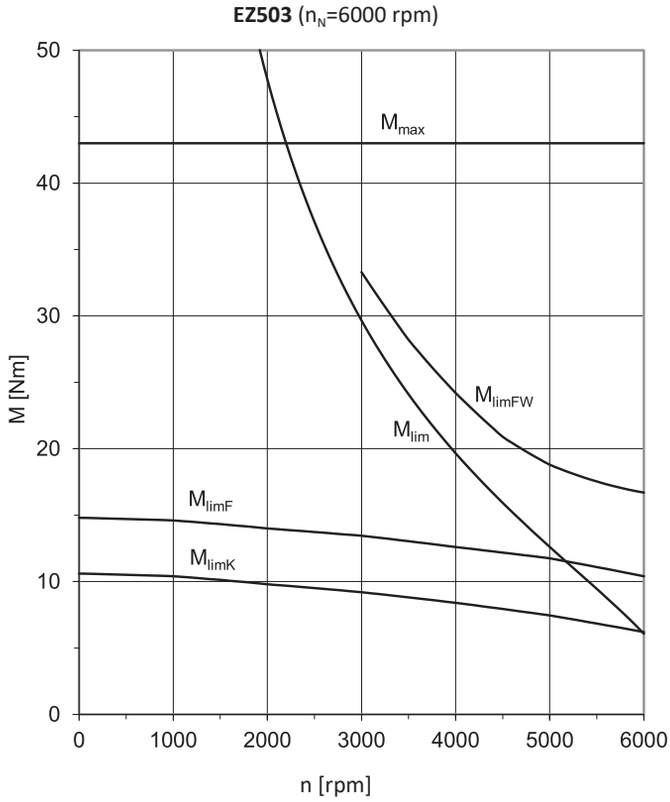

EZ505 (n_N=3000 rpm)

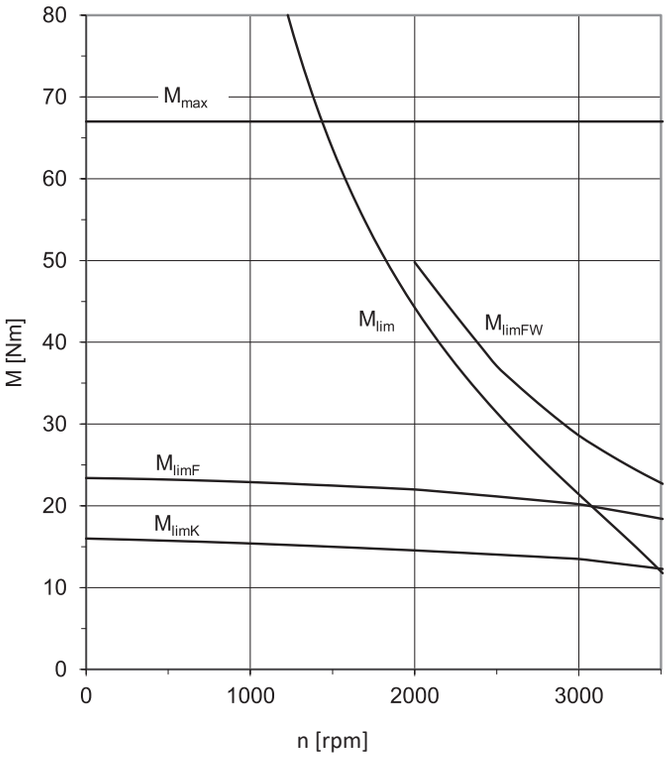

EZ505 (n_N=4500 rpm)

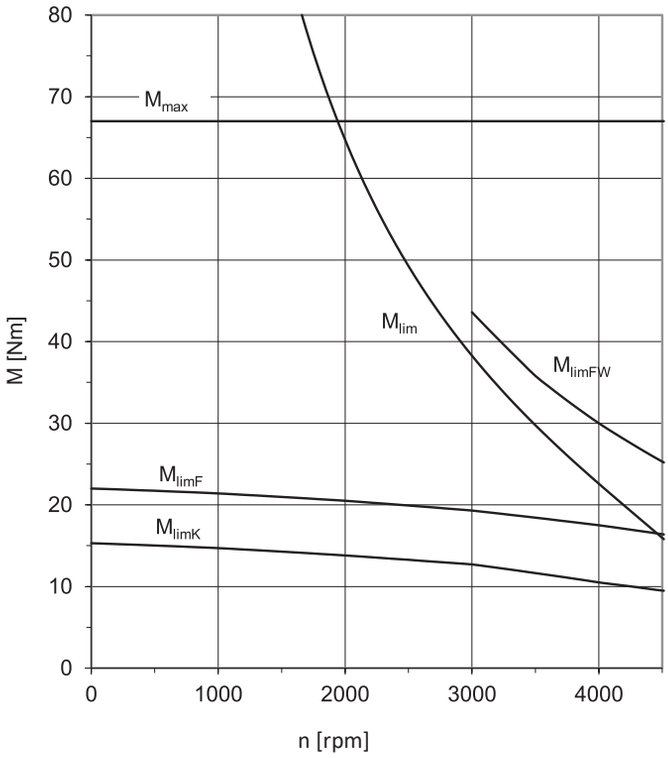

EZ701 (n_N=3000 rpm)

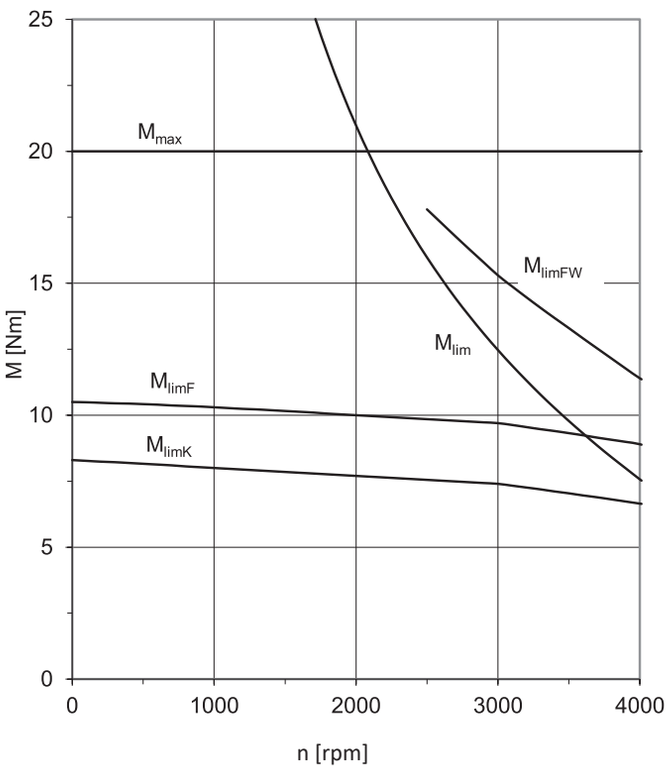

EZ701 (n_N=6000 rpm)

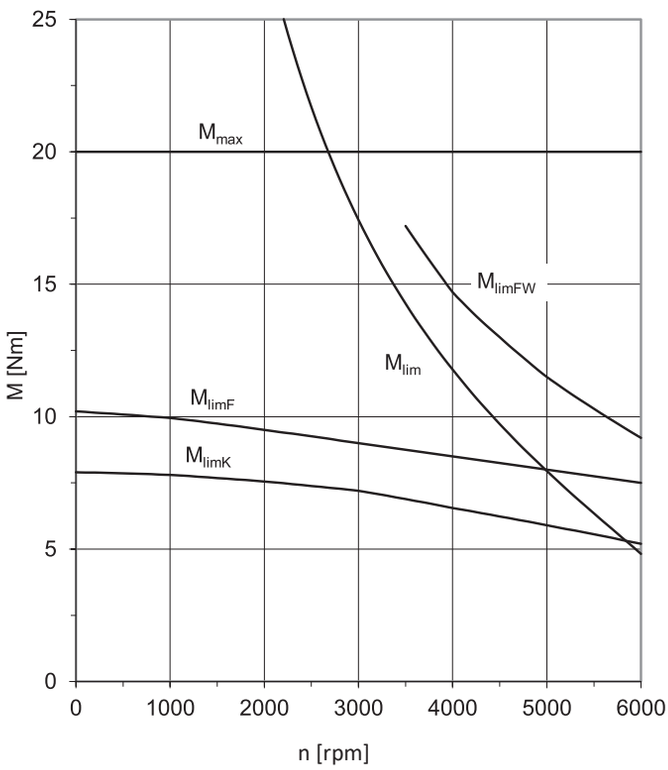

EZ702 (n_N=3000 rpm)

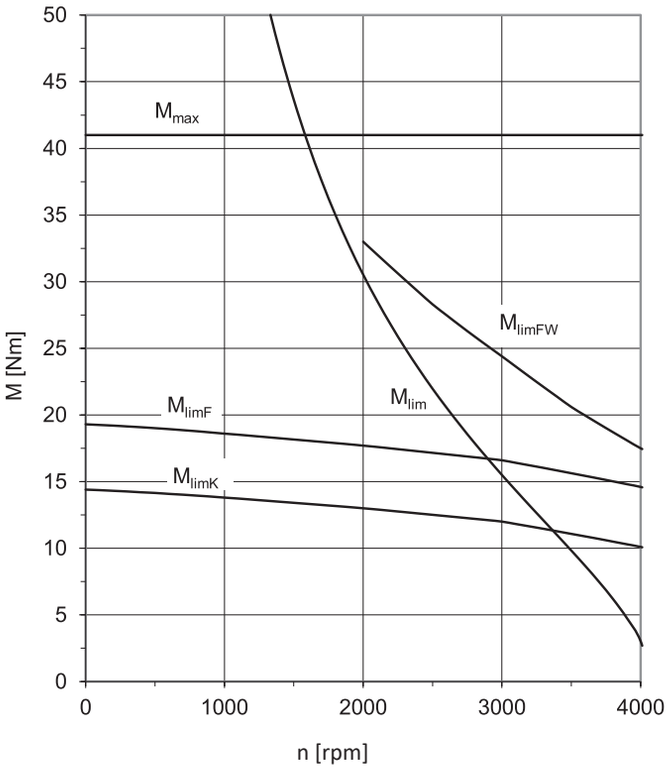

EZ702 (n_N=6000 rpm)

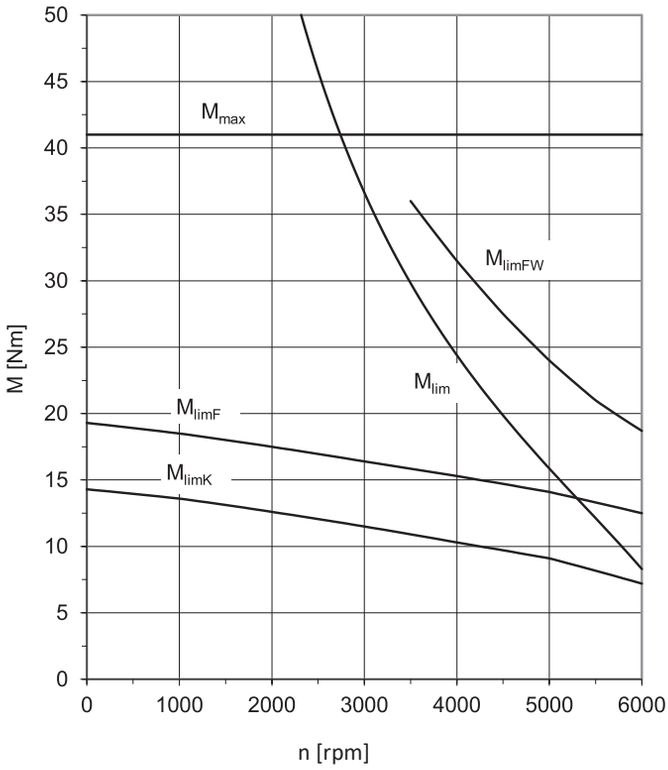

EZ703 (n_N=3000 rpm)

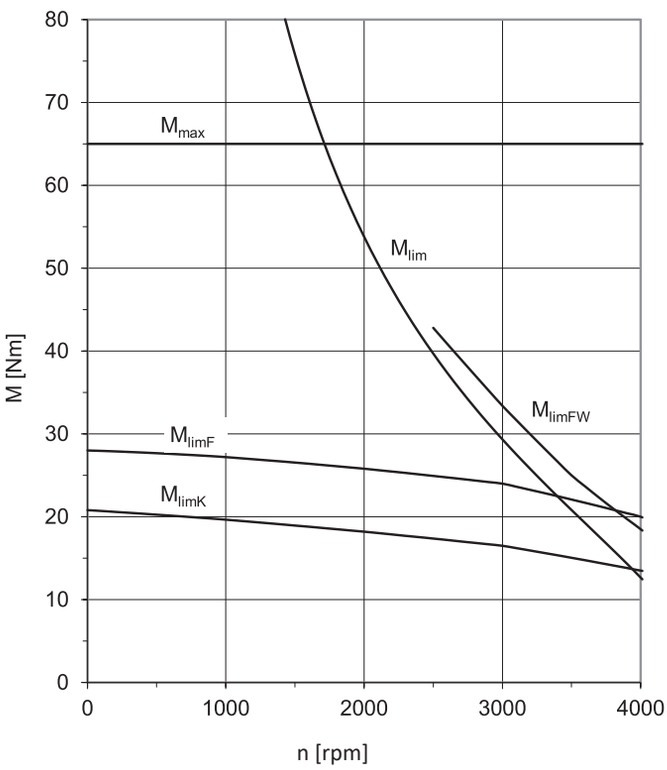

EZ703 (n_N=4500 rpm)

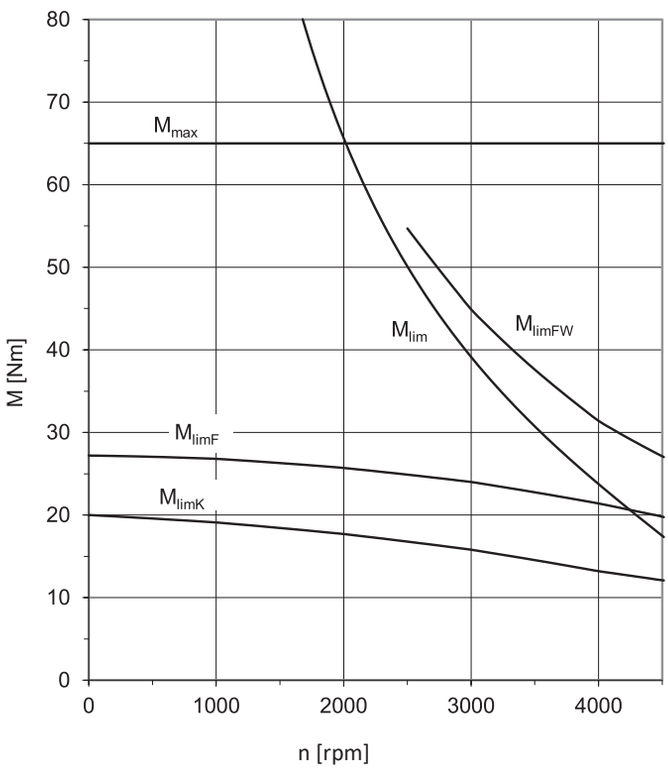

EZ705 (n_N=3000 rpm)

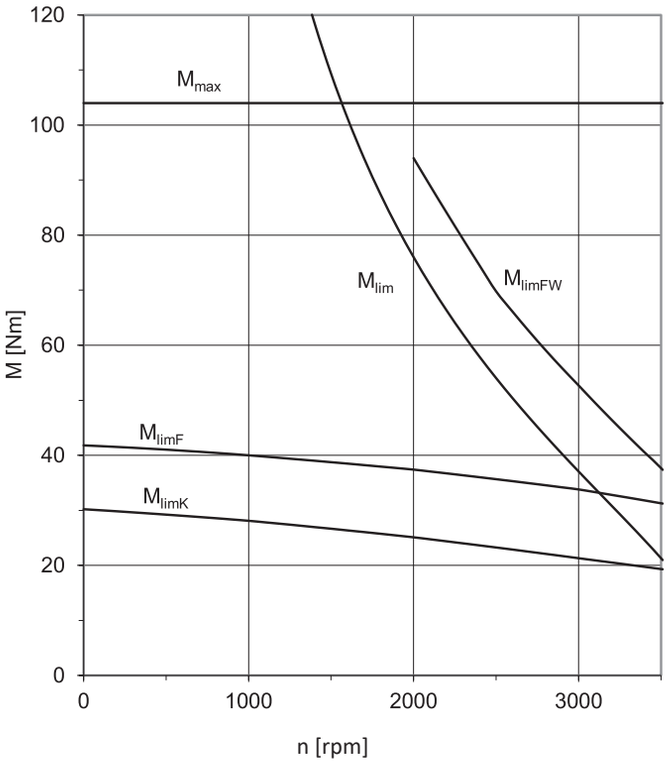

EZ705 (n_N=4500 rpm)

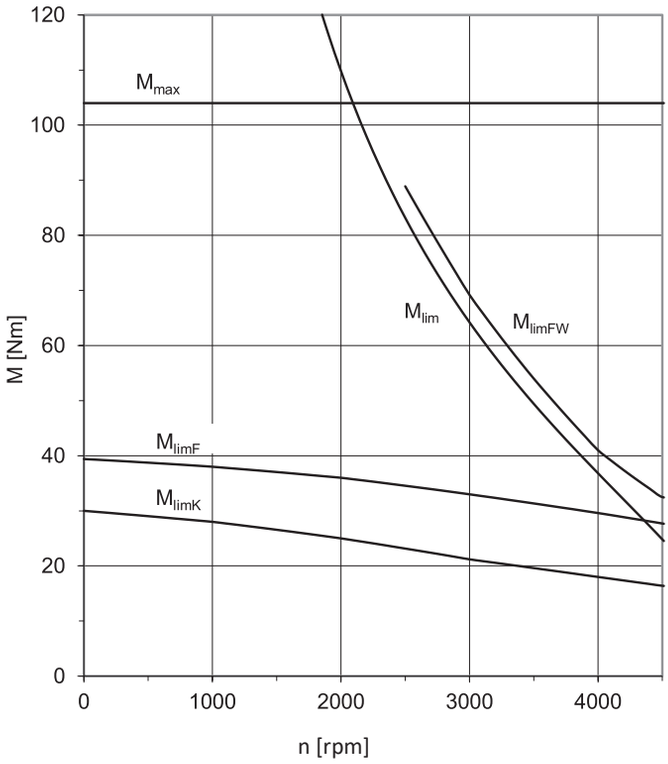

EZ813 (n_N=2000 rpm)

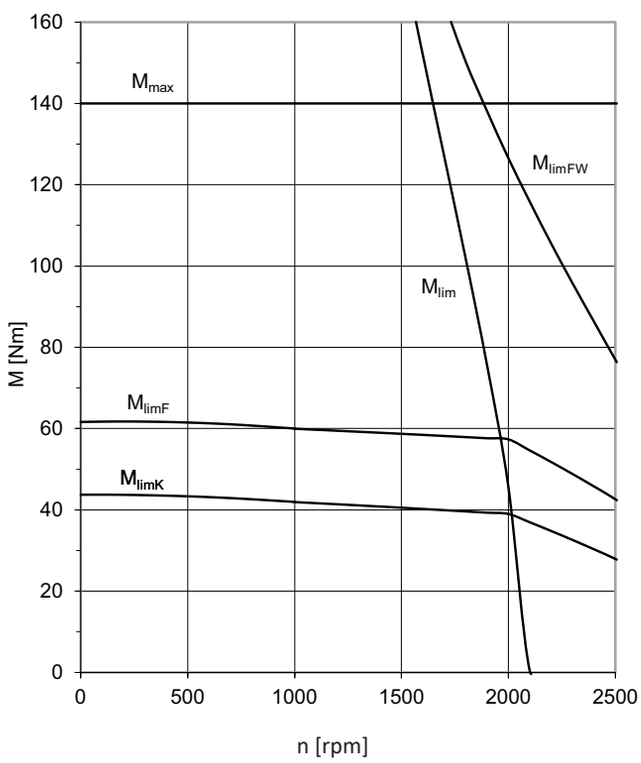

EZ813 (n_N=4000 rpm)

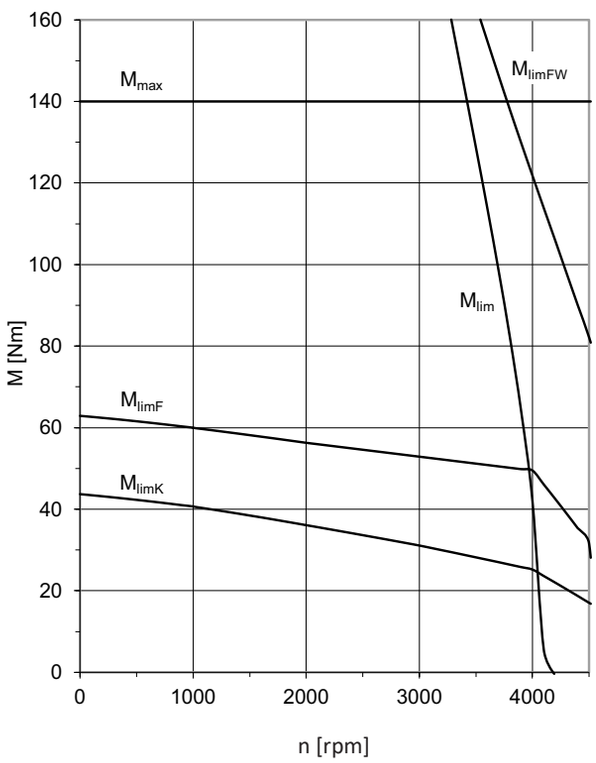

EZ815 (n_N=2000 rpm)

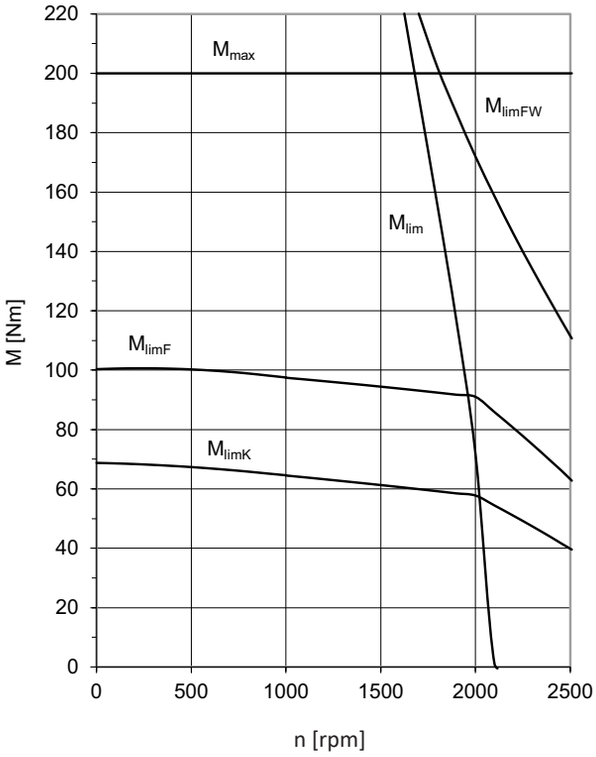

EZ815 (n_N=4000 rpm)

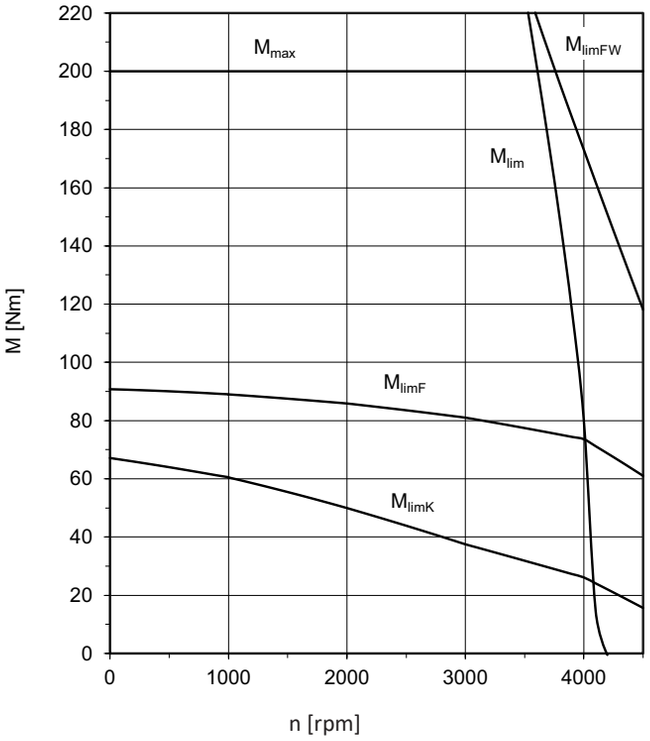

17.4 Dimensional drawings

In this chapter, you can find the dimensions of the motors.

Dimensions can exceed the specifications of ISO 2768-mK due to casting tolerances or accumulation of individual tolerances.

We reserve the right to make dimensional changes due to ongoing technical development.

You can download 3D models of our standard drives at https://configurator.stoeber.de/en-US/.

In this chapter, the dimensions p1 and w1 for standard motor designs are presented. In designs for connection to drive controllers of third-party manufacturers, dimensions p1 and w1 may differ. You can find more details at https://configurator.stoeber.de/en-US/.

Tolerances

Solid shaft	Tolerance
Shaft ∅ fit ≤ 50 mm	DIN 748-1, ISO k6
Shaft ∅ fit > 50 mm	DIN 748-1, ISO m6

Centering holes in solid shafts in accordance with DIN 332-2, DR shape

Thread size	M4	M5	M6	M8	M10	M12	M16	M20	M24
Thread depth [mm]	10	12.5	16	19	22	28	36	42	50

17.4.1 EZ2 – EZ3 motors (One Cable Solution)

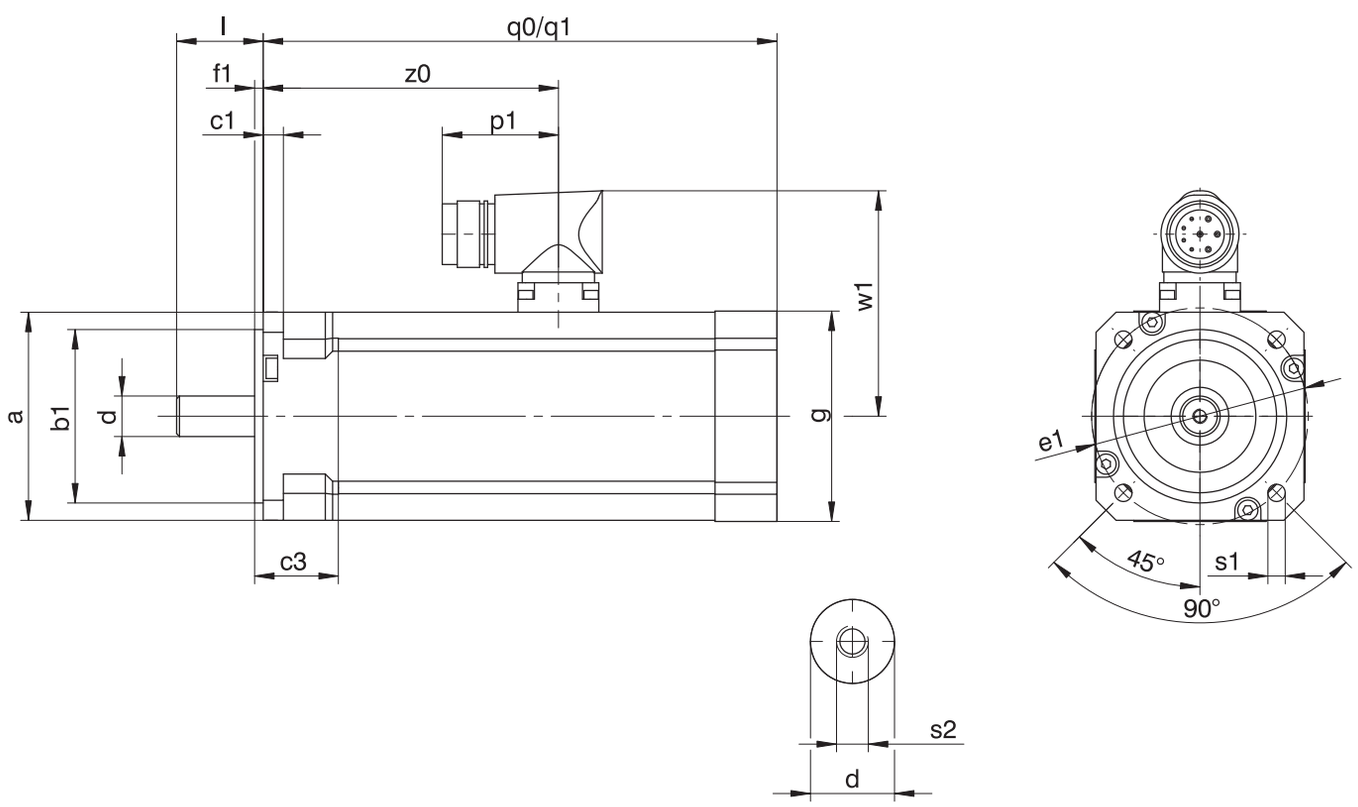

q0 Applies to motors without holding brake q1 Applies to motors with holding brake

Type	□a	Øb1	c1	c3	Ød	Øe1	f1	□g	l	p1	q0	q1	Øs1	s2	w1	z0
EZ202U	55	40_{j6}	7	7	9_{k6}	63	3.5	55	20	40	148	182	5.8	M4	69.5	93.0
EZ203U	55	40_{j6}	7	7	9_{k6}	63	3.5	55	20	40	166	200	5.8	M4	69.5	111.0
EZ301U	72	60_{j6}	7	26	14_{k6}	75	3.0	72	30	40	116	156	6.0	M5	78.0	80.5
EZ302U	72	60_{j6}	7	26	14_{k6}	75	3.0	72	30	40	138	178	6.0	M5	78.0	102.5
EZ303U	72	60_{j6}	7	26	14_{k6}	75	3.0	72	30	40	160	200	6.0	M5	78.0	124.5

17.4.2 EZ2 – EZ3 motors with convection cooling

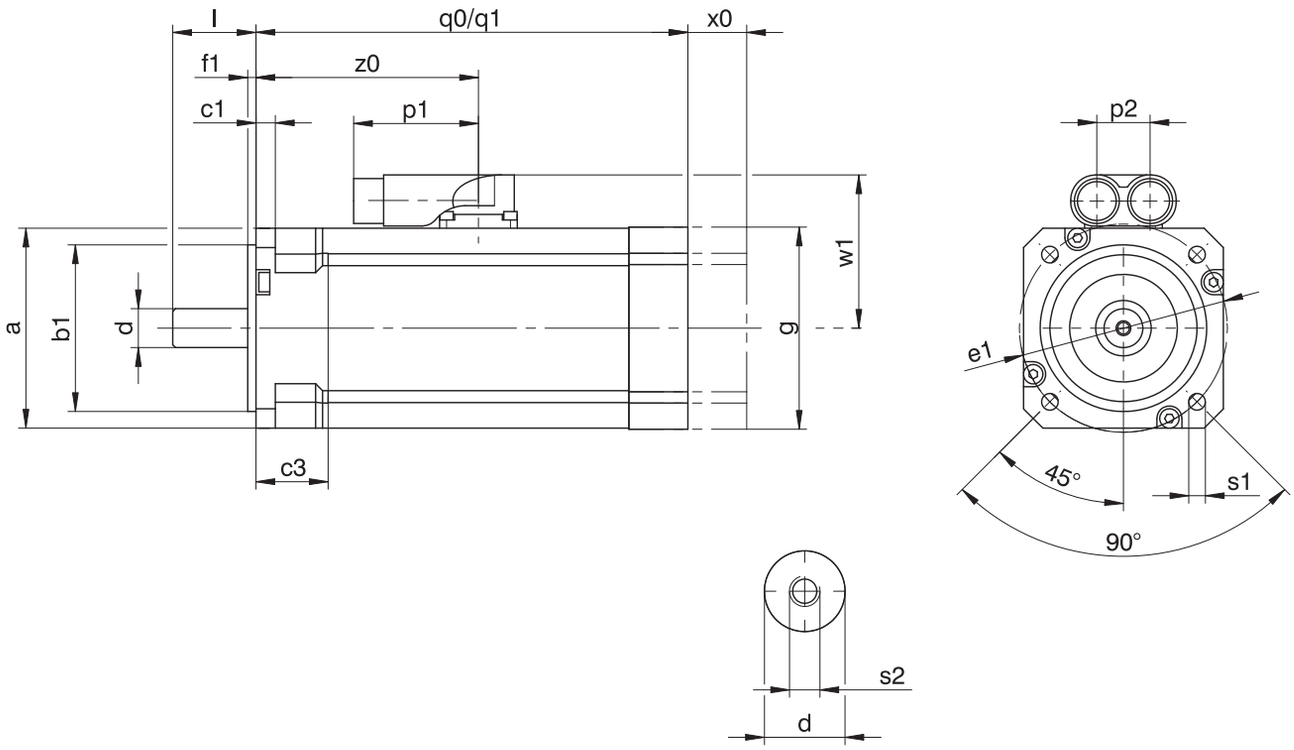

q0 Applies to motors without holding brake

q1 Applies to motors with holding brake

x0 EZ2: Applies only to motors with holding brake and encoders using an optical or inductive measuring method
EZ3: Applies to encoders using an optical measuring method

Type	□a	Øb1	c1	c3	Ød	Øe1	f1	□g	l	p1	p2	q0	q1	Øs1	s2	w1	x0	z0
EZ202U	55	40_{j6}	7	7	9_{k6}	63	3.5	55	20	45	19	148	157	5.8	M4	47.0	25	93.0
EZ203U	55	40_{j6}	7	7	9_{k6}	63	3.5	55	20	45	19	166	175	5.8	M4	47.0	25	111.0
EZ301U	72	60_{j6}	7	26	14_{k6}	75	3.0	72	30	45	19	116	156	6.0	M5	55.5	21	80.5
EZ302U	72	60_{j6}	7	26	14_{k6}	75	3.0	72	30	45	19	138	178	6.0	M5	55.5	21	102.5
EZ303U	72	60_{j6}	7	26	14_{k6}	75	3.0	72	30	45	19	160	200	6.0	M5	55.5	21	124.5

17.4.3 EZ4 – EZ7 motors with convection cooling (One Cable Solution)

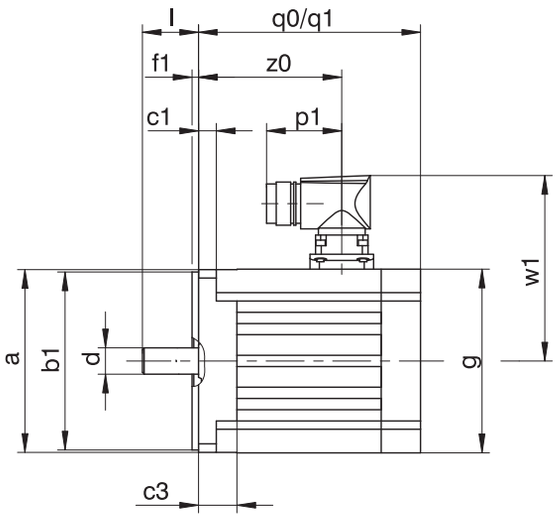

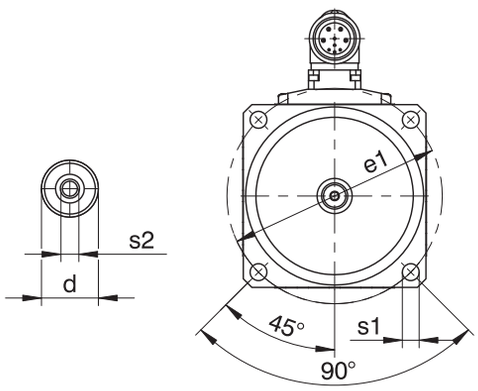

q0 Applies to motors without holding brake

q1 Applies to motors with holding brake

Type	□a	Øb1	c1	c3	Ød	Øe1	f1	□g	l	p1	q0	q1	Øs1	s2	w1	z0
EZ401U	98	95_{j6}	9.5	20.5	14_{k6}	115	3.5	98	30	40	118.5	167.0	9	M5	99	76.5
EZ402U	98	95_{j6}	9.5	20.5	19_{k6}	115	3.5	98	40	40	143.5	192.0	9	M6	99	101.5
EZ404U	98	95_{j6}	9.5	20.5	19_{k6}	115	3.5	98	40	40	193.5	242.0	9	M6	99	151.5
EZ501U	115	110_{j6}	10.0	16.0	19_{k6}	130	3.5	115	40	40	109.0	163.5	9	M6	110	74.5
EZ502U	115	110_{j6}	10.0	16.0	19_{k6}	130	3.5	115	40	40	134.0	188.5	9	M6	110	99.5
EZ503U	115	110_{j6}	10.0	16.0	24_{k6}	130	3.5	115	50	40	159.0	213.5	9	M8	110	124.5
EZ505U	115	110_{j6}	10.0	16.0	24_{k6}	130	3.5	115	50	40	209.0	263.5	9	M8	110	174.5
EZ701U	145	130_{j6}	10.0	19.0	24_{k6}	165	3.5	145	50	40	121.0	180.0	11	M8	125	83.0
EZ702U	145	130_{j6}	10.0	19.0	24_{k6}	165	3.5	145	50	40	146.0	205.0	11	M8	125	108.0
EZ703U	145	130_{j6}	10.0	19.0	24_{k6}	165	3.5	145	50	40	171.0	230.0	11	M8	125	133.0
EZ705U	145	130_{j6}	10.0	19.0	32_{k6}	165	3.5	145	58	40	226.0	285.0	11	M12	125	184.0

17.4.4 EZ4 – EZ8 motors with convection cooling

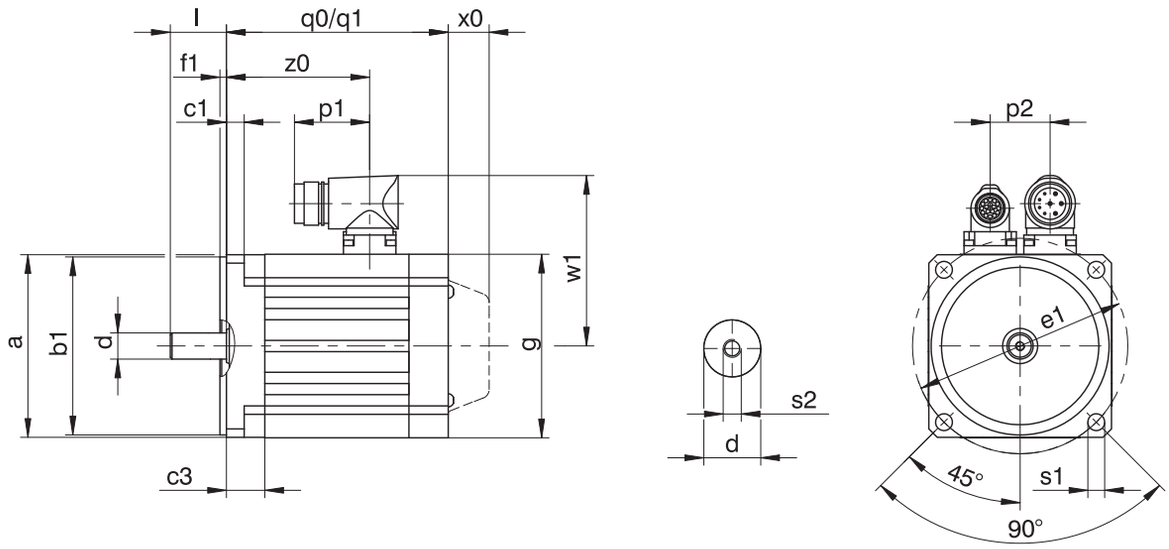

q0 Applies to motors without holding brake

q1 Applies to motors with holding brake

x0 Applies to encoders based on an optical measuring method

Type	□a	Øb1	c1	c3	Ød	Øe1	f1	□g	l	p1	p2	q0	q1	Øs1	s2	w1	x0	z0
EZ401U	98	95_{j6}	9.5	20.5	14_{k6}	115	3.5	98	30	40	32	118.5	167.0	9.0	M5	91.0	22	76.5
EZ402U	98	95_{j6}	9.5	20.5	19_{k6}	115	3.5	98	40	40	32	143.5	192.0	9.0	M6	91.0	22	101.5
EZ404U	98	95_{j6}	9.5	20.5	19_{k6}	115	3.5	98	40	40	32	193.5	242.0	9.0	M6	91.0	22	151.5
EZ501U	115	110_{j6}	10.0	16.0	19_{k6}	130	3.5	115	40	40	36	109.0	163.5	9.0	M6	100.0	22	74.5
EZ502U	115	110_{j6}	10.0	16.0	19_{k6}	130	3.5	115	40	40	36	134.0	188.5	9.0	M6	100.0	22	99.5
EZ503U	115	110_{j6}	10.0	16.0	24_{k6}	130	3.5	115	50	40	36	159.0	213.5	9.0	M8	100.0	22	124.5
EZ505U	115	110_{j6}	10.0	16.0	24_{k6}	130	3.5	115	50	40	36	209.0	263.5	9.0	M8	100.0	22	174.5
EZ701U	145	130_{j6}	10.0	19.0	24_{k6}	165	3.5	145	50	40	42	121.0	180.0	11.0	M8	115.0	22	83.0
EZ702U	145	130_{j6}	10.0	19.0	24_{k6}	165	3.5	145	50	40	42	146.0	205.0	11.0	M8	115.0	22	108.0
EZ703U	145	130_{j6}	10.0	19.0	24_{k6}	165	3.5	145	50	40	42	171.0	230.0	11.0	M8	115.0	22	133.0
EZ705U	145	130_{j6}	10.0	19.0	32_{k6}	165	3.5	145	58	71	42	226.0	285.0	11.0	M12	134.0	22	184.0
EZ813U	190	180_{j6}	15.0	25.0	38_{k6}	215	3.5	190	80	71	60	263.0	340.0	13.5	M12	156.5	22	209.0
EZ815U	190	180_{j6}	15.0	25.0	38_{k6}	215	3.5	190	80	71	60	345.0	422.0	13.5	M12	156.5	22	291.0

17.4.5 EZ4 – EZ7 motors with forced ventilation (One Cable Solution)

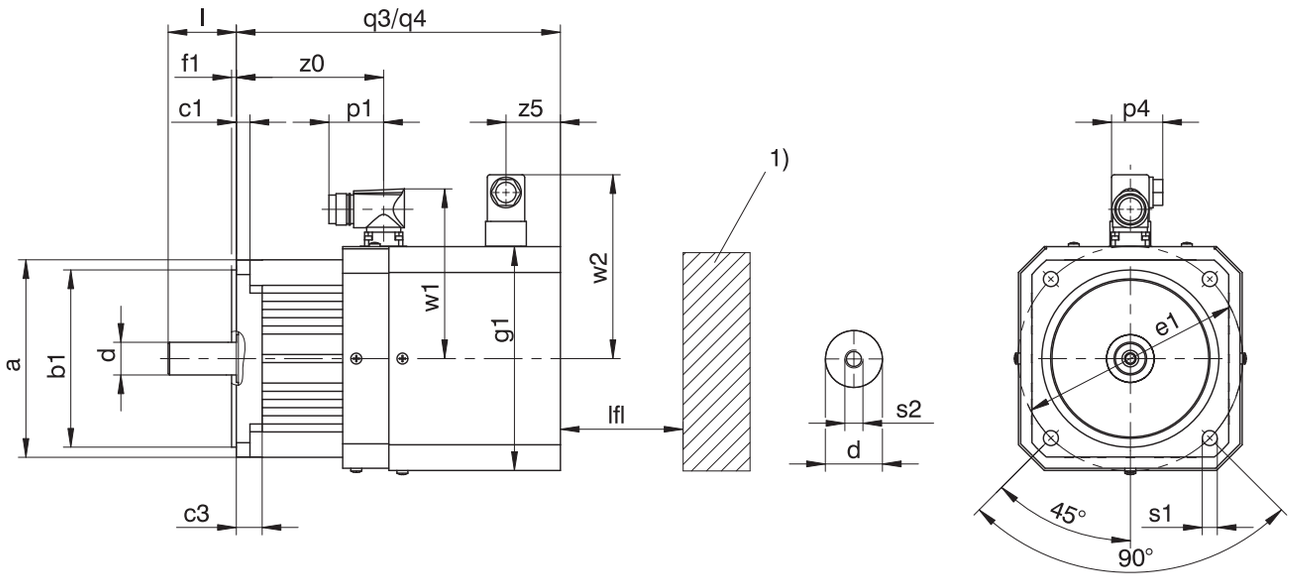

q3 Applies to motors without holding brake

q4 Applies to motors with holding brake

1) Machine wall

Type	□a	Øb1	c1	c3	Ød	Øe1	f1	□g1	l	lfl_{min}	p1	p4	q3	q4	Øs1	s2	w1	w2	z0	z5
EZ401B	98	95_{j6}	9.5	20.5	14_{k6}	115	3.5	118	30	20	40	37.5	175	224	9.0	M5	99	111	76.5	25
EZ402B	98	95_{j6}	9.5	20.5	19_{k6}	115	3.5	118	40	20	40	37.5	200	249	9.0	M6	99	111	101.5	25
EZ404B	98	95_{j6}	9.5	20.5	19_{k6}	115	3.5	118	40	20	40	37.5	250	299	9.0	M6	99	111	151.5	25
EZ501B	115	110_{j6}	10.0	16.0	19_{k6}	130	3.5	135	40	20	40	37.5	179	234	9.0	M6	110	120	74.5	25
EZ502B	115	110_{j6}	10.0	16.0	19_{k6}	130	3.5	135	40	20	40	37.5	204	259	9.0	M6	110	120	99.5	25
EZ503B	115	110_{j6}	10.0	16.0	24_{k6}	130	3.5	135	50	20	40	37.5	229	284	9.0	M8	110	120	124.5	25
EZ505B	115	110_{j6}	10.0	16.0	24_{k6}	130	3.5	135	50	20	40	37.5	279	334	9.0	M8	110	120	174.5	25
EZ701B	145	130_{j6}	10.0	19.0	24_{k6}	165	3.5	165	50	30	40	37.5	213	272	11.0	M8	125	134	83.0	40
EZ702B	145	130_{j6}	10.0	19.0	24_{k6}	165	3.5	165	50	30	40	37.5	238	297	11.0	M8	125	134	108.0	40
EZ703B	145	130_{j6}	10.0	19.0	24_{k6}	165	3.5	165	50	30	40	37.5	263	322	11.0	M8	125	134	133.0	40

17.4.6 EZ4 – EZ8 motors with forced ventilation

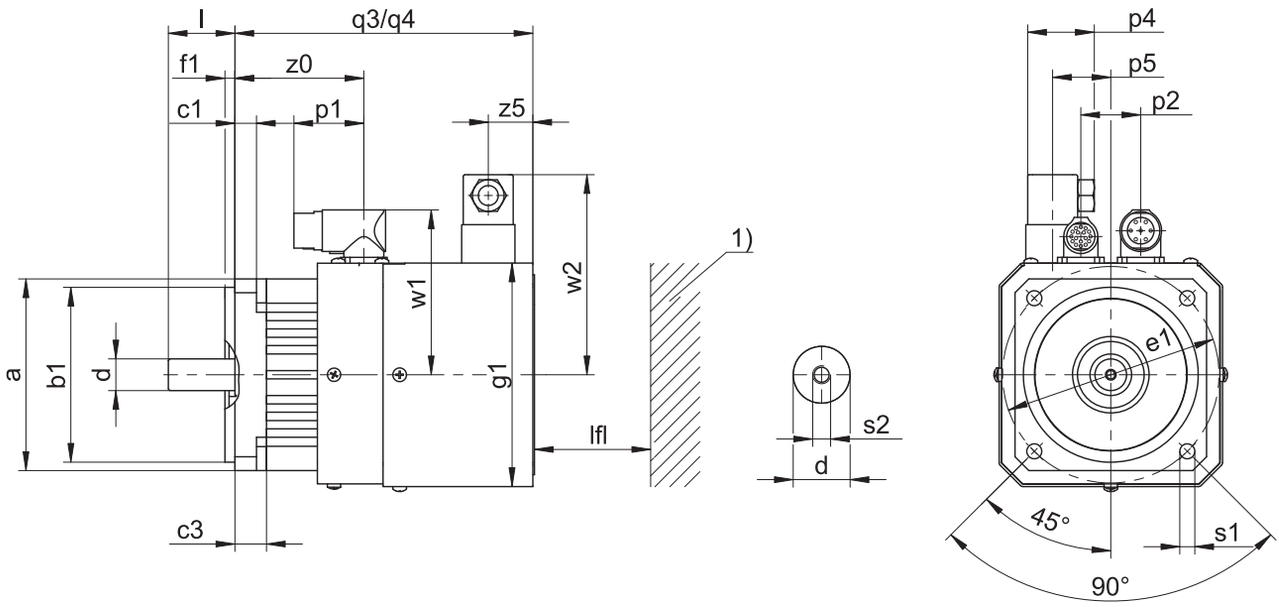

q3 Applies to motors without holding brake

q4 Applies to motors with holding brake

1) Machine wall

Type	□a	Øb1	c1	c3	Ød	Øe1	f1	□g1	l	lfl_{min}	p1	p2	p4	p5	q3	q4	Øs1	s2	w1	w2	z0	z5
EZ401B	98	95_{j6}	9.5	20.5	14_{k6}	115	3.5	118	30	20	40	32	37.5	0	175	224	9.0	M5	91.0	111	76.5	25
EZ402B	98	95_{j6}	9.5	20.5	19_{k6}	115	3.5	118	40	20	40	32	37.5	0	200	249	9.0	M6	91.0	111	101.5	25
EZ404B	98	95_{j6}	9.5	20.5	19_{k6}	115	3.5	118	40	20	40	32	37.5	0	250	299	9.0	M6	91.0	111	151.5	25
EZ501B	115	110_{j6}	10.0	16.0	19_{k6}	130	3.5	135	40	20	40	36	37.5	0	179	234	9.0	M6	100.0	120	74.5	25
EZ502B	115	110_{j6}	10.0	16.0	19_{k6}	130	3.5	135	40	20	40	36	37.5	0	204	259	9.0	M6	100.0	120	99.5	25
EZ503B	115	110_{j6}	10.0	16.0	24_{k6}	130	3.5	135	50	20	40	36	37.5	0	229	284	9.0	M8	100.0	120	124.5	25
EZ505B	115	110_{j6}	10.0	16.0	24_{k6}	130	3.5	135	50	20	40	36	37.5	0	279	334	9.0	M8	100.0	120	174.5	25
EZ701B	145	130_{j6}	10.0	19.0	24_{k6}	165	3.5	165	50	30	40	42	37.5	0	213	272	11.0	M8	115.0	134	83.0	40
EZ702B	145	130_{j6}	10.0	19.0	24_{k6}	165	3.5	165	50	30	40	42	37.5	0	238	297	11.0	M8	115.0	134	108.0	40
EZ703B	145	130_{j6}	10.0	19.0	24_{k6}	165	3.5	165	50	30	40	42	37.5	0	263	322	11.0	M8	115.0	134	133.0	40
EZ705B	145	130_{j6}	10.0	19.0	32_{k6}	165	3.5	165	58	30	71	42	37.5	0	318	377	11.0	M12	134.0	134	184.0	40
EZ813B	190	180_{j6}	15.0	25.0	38_{k6}	215	3.5	215	80	30	71	60	37.5	62	363	440	13.5	M12	156.5	160	209.0	40
EZ815B	190	180_{j6}	15.0	25.0	38_{k6}	215	3.5	215	80	30	71	60	37.5	62	445	522	13.5	M12	156.5	160	291.0	40

17.5 Type designation

The type designation of a geared motor is composed of the type designation of the gearbox and motor. This chapter describes the type designation of the motor. The type designation of the gearbox is explained in the respective gearbox chapter.

Example code

EZ	4	0	1	U

Explanation

Code	Designation	Design
EZ	Type	Synchronous servo motor
4	Size	4 (example)
0	Generation	Generation 0
1		Generation 1
1	Length	1 (example)
U	Cooling[1]	Convection cooling
B		Forced ventilation

To complete the type designation, also specify the following in your order:

- Code of the drive controller, see the chapter [▶ 17.6.4.6]
- Code of the encoder, see the chapter [▶ 17.6.4]
- With or without holding brake (option), see the chapter [▶ 17.6.7]
- Voltage constant K_{EM}, see the chapter [▶ 17.2]

To make selecting your motor easy, use our STOBER Configurator at https://configurator.stoeber.de/en-US/.

[1] EZ2/EZ3 motors only available with convection cooling

17.5.1 Nameplate

The nameplate of a P731_EZ705 synchronous servo geared motor is explained as an example in this chapter.

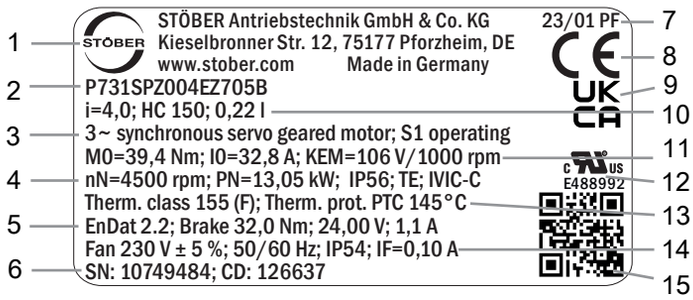

Line	Value	Description
1	STÖBER Antriebstechnik GmbH + Co. KG	Logo and address of the manufacturer
2	P731SPZ004EZ705B	Type designation of the geared motor
3	3~ synchronous servo geared motor S1 operating	Geared motor type: three-phase synchronous servo geared motor Operating mode
4	nN=4500 rpm PN=13.05 kW IP56 TE IVIC-C	Nominal speed Nominal power Protection class of the motor Protection class in accordance with UL1004 Impulse voltage insulation class
5	EnDat 2.2 Brake 32.0 Nm 24.00 V 1.1 A	Encoder interface Holding brake (optional) Static braking torque at 100 °C Nominal voltage (DC) of the holding brake Nominal current of the holding brake at 20 °C
6	SN: 10749484 CD: 126637	Serial number of the motor Customer-specific data
7	23/01 PF	Date of manufacture (year/calendar week) Place of manufacture (abbreviation)
8	CE	CE mark
9	UKCA	UKCA mark
10	i=4.0 HC 150 0.22 l	Gear ratio of the gearbox Lubricant specification Lubricant fill volume
11	M0=39.4 Nm I0=32.8 A KEM=106 V/1000 rpm	Stall torque Stall current Voltage constant
12	cURus E488992	cURus test symbol, registered under UL number E488992
13	Therm. class 155 (F) Therm. prot. PTC 145 °C	Thermal class Type of temperature sensor
14	Fan 230 V ± 5%; 50/60 Hz IP54 IF = 0.10 A	Forced ventilation unit (option) Nominal voltage of the forced ventilation unit Protection class of the forced ventilation unit Nominal current of the forced ventilation unit
15	QR code	Link to product information

17.6 Product description

17.6.1 General features

Feature	Description
Design	IM B5, IM V1, IM V3 in accordance with EN 60034-7
Protection class	IP56 / IP66 (option)
Thermal class	155 (F) in accordance with EN 60034-1 (155 °C, heating $\Delta\vartheta$ = 100 K)
Surface	Matte black as per RAL 9005
Cooling	IC 410 convection cooling (IC 416 convection cooling with forced ventilation units, optional)
Bearing	Rolling bearing with lifetime lubrication and non-contact sealing
Sealing	Radial shaft seal rings made of FKM (A side)
Shaft	Shaft without feather key, diameter quality k6
Radial runout	Normal tolerance class in accordance with IEC 60072-1
Concentricity	Normal tolerance class in accordance with IEC 60072-1
Axial runout	Normal tolerance class in accordance with IEC 60072-1
Vibration intensity	A in accordance with EN 60034-14
Noise level	Limit values in accordance with EN 60034-9

17.6.2 Electrical features

General electrical features of the motor are described in this chapter. You can find more details in Chapter [▶ 17.2].

Feature	Description
DC link voltage	DC 540 V (max. 750 V) on STOBER drive controllers
Winding	Three-phase
Circuit	Star, center not led through
Protection class	I (protective grounding) in accordance with EN 61140
Impulse voltage insulation class (IVIC)	C in accordance with DIN EN 60034-18-41 (inverter connection voltage 0 – 480 V ± 10%)
Number of pole pairs	2 (EZ2) 5 (EZ3) 7 (EZ4/EZ5/EZ7) 4 (EZ8)

17.6.3 Ambient conditions

Standard ambient conditions for transport, storage and operation of the motor are described in this chapter. Information about differing ambient conditions can be found in the chapter [▶ 17.7.3].

Feature	Description
Surrounding temperature for transport/storage	−30 °C to +85 °C
Surrounding temperature for operation	−15 °C to +40 °C
Relative humidity	5% to 95%, no condensation
Installation altitude	≤ 1000 m above sea level
Shock load	≤ 50 m/s^2 (5 g), 6 ms in accordance with EN 60068-2-27

Tab. 1: Technical characteristics – Ambient conditions

Notes

- STOBER synchronous servo motors are not suitable for potentially explosive atmospheres.
- Secure the power cables close to the motor so that vibrations of the cable do not place impermissible loads on the motor plug connector.
- Note that the braking torques of the holding brake (optional) may be reduced by shock loading.
- At operating temperatures below 0 °C, note that the discs of the holding brake (optional) may ice up.
- Also take into consideration the shock load of the motor due to output units (such as gearboxes and pumps) which are coupled with the motor.

17.6.4 Encoders

STOBER synchronous servo motors can be designed with different encoder models. The following chapters include information for choosing the optimal encoder for your application.

17.6.4.1 Encoder measuring method selection tool

The following table offers a selection tool for an encoder measuring method that is optimally suited for your application.

Feature	Absolute encoder		Resolvers
Measuring method	Optical	Inductive	Electromag-netic
Temperature resistance	★★☆	★★★	★★★
Vibration strength and shock resistance	★★☆	★★★	★★★
System accuracy	★★★	★★☆	★☆☆
Safety-related position measuring system for use in safety-oriented applications	✓[2]	✓[3]	–
Elimination of referencing with multi-turn design (optional)	✓	✓	–
Simple commissioning with electronic nameplate	✓	✓	–
Key: ★☆☆ = satisfactory, ★★☆ = good, ★★★ = very good			

17.6.4.2 Selection tool for EnDat interface

The following table offers a selection tool for the EnDat interface of absolute encoders.

Feature	EnDat 2.1	EnDat 2.2	EnDat 3
Short cycle times	★★☆	★★★	★★★
Transfer of additional information along with the position value	–	✓	✓
Expanded power supply range	★★☆	★★★	★★★
One Cable Solution (OCS)	–	–	✓
Key: ★★☆ = good, ★★★ = very good			

17.6.4.3 EnDat 3 encoders

EnDat 3 is a robust, purely digital protocol that functions with minimal connection lines. EnDat 3 facilitates the One Cable Solution, which allows the connection lines between the encoder and drive controller to be routed along in the motor's power cable.

The One Cable Solution offers the following advantages:

- Significantly reduced wiring effort by eliminating the encoder cable
- For cable lengths up to 50 m, a choke between the drive controller and motor is not necessary
- Extended safety functions possible (up to SIL 2 / category 3, PL d)
- Significantly reduced space requirements by eliminating the encoder plug connector
- Transmission of measured values from the temperature sensor using the EnDat 3 protocol

A motor with the EnDat 3 encoder can be operated only on a SI6 or SC6 drive controller from STOBER.

The EnDat 3 encoder has the following features:

Encoder model	Code	Measuring method	Recordable revolutions	Resolution	Position values per revolution	MTTF [years]	PFH [h]
EnDat 3 EQI 1131 Safety	S7	Inductive	4096	19 bit	524288	> 100	$\leq 15 \times 10^{-9}$

[2] The EnDat 2.1 EQN 1125 encoder does not have FS certification from the manufacturer. However, STOBER installs it in the same way as the safety devices.

[3] Not for EnDat 2.2 ECI 1118-G2 encoders

17.6.4.4 EnDat 2 encoders

In this chapter, you can find detailed technical data for encoder models that can be selected with EnDat interface.

Encoders with EnDat 2.2 interface

Encoder model	Code	Measuring method	Recordable revolutions	Resolution	Position values per revolution	MTTF [years]	PFH [h]
EnDat 2.2 EQI 1131 Safety	S2	Inductive	4096	19 bit	524288	> 100	$\leq 15 \times 10^{-9}$
EnDat 2.2 ECI 1118-G2	C5	Inductive	–	18 bit	262144	> 76	$\leq 1.5 \times 10^{-6}$
EnDat 2.2 EQN 1135 Safety	S3	Optical	4096	23 bit	8388608	> 100	$\leq 15 \times 10^{-9}$

Encoders with EnDat 2.1 interface

Encoder model	Code	Measuring method	Recordable revolutions	Resolution	Position values per revolution	Periods per revolution	MTTF [years]	PFH [h]
EnDat 2.1 EQN 1125	Q4	Optical	4096	13 bit	8192	Sin/cos 512	> 57	$\leq 2 \times 10^{-6}$
EnDat 2.1 ECI 1118-G3	C2	Inductive	–	18 bit	262144	Sin/cos 16	> 100	$\leq 6 \times 10^{-7}$
EnDat 2.1 EQI 1130-G3	Q2	Inductive	4096	18 bit	262144	Sin/cos 16	> 100	$\leq 6 \times 10^{-7}$

Notes

- The encoder code is a part of the type designation of the motor.
- Safety = Safety-related position measuring system for use in safety-oriented applications.
- MTTF = Average time before dangerous failure. MTTF values greater than 100 years were reduced in accordance with DIN EN ISO 13849.
- PFH = Probability of a dangerous failure per hour.
- Multiple revolutions of the motor shaft can be recorded only using multi-turn encoders.

17.6.4.5 Resolver

In this chapter, you can find detailed technical data for the resolver that can be installed as an encoder in a STOBER synchronous servo motor.

Feature	Description
Code	R0
Number of poles	2
Input voltage U_{1eff}	7 V ± 5%
Input frequency f_1	10 kHz
Output voltage $U_{2,S1–S3}$	$K_{tr} \cdot U_{R1–R2} \cdot \cos \theta$
Output voltage $U_{2,S2–S4}$	$K_{tr} \cdot U_{R1–R2} \cdot \sin \theta$
Transformation ratio K_{tr}	0.5 ± 5%
Electrical fault	±10 arcmin
MTTF	> 100 years
PFH	$\leq 10^{-9}$

Tab. 2: Technical characteristics – Ambient conditions

17.6.4.6 Possible combinations with drive controllers

The following table shows the options for combining STOBER drive controllers with selectable encoder models.

Drive controller		**SB6**			**SC6**			**SI6**			**SD6**	
Drive controller code		BC	BD	BE	AU	AV	**BA**	AP	AQ	**BB**	AD	AE
Connection plan ID		443376	443377	443378	443052	443053	**443174**	442771	442772	**443175**	442450	442451
Encoder	**Encoder code**											
EnDat 3 EQI 1131 Safety	S7	–	✓	–	–	–	✓	–	–	✓	–	–
EnDat 2.2 EQI 1131 Safety	S2	✓	–	–	✓	–	–	✓	–	–	✓	–
EnDat 2.2 EQN 1135 Safety	S3	✓	–	–	✓	–	–	✓	–	–	✓	–
EnDat 2.2 ECI 1118-G2	C5	✓	–	–	✓	–	–	✓	–	–	✓	–
EnDat 2.1 EQN 1125	Q4	–	–	✓	–	–	–	–	–	–	–	✓
EnDat 2.1 ECI 1118-G3	C2	–	–	✓	–	–	–	–	–	–	–	✓
Resolvers	R0	–	–	✓	–	✓	–	–	✓	–	–	✓

Notes

- In Chapter [▷ 18], you can find information about options for connecting STOBER synchronous servo motors to drive controllers from other manufacturers.

17.6.5 Temperature sensor

In this chapter, you can find technical data for the temperature sensors that are installed in STOBER synchronous servo motors for implementing thermal winding protection. To prevent damage to the motor, always monitor the temperature sensor with appropriate devices that will turn off the motor if the maximum permitted winding temperature is exceeded.

Some encoders feature integrated temperature monitoring, the warning and switch-off thresholds of which may overlap with the corresponding values set for the temperature sensor in the drive controller. In some cases, this may result in an instance where an encoder with internal temperature monitoring forces the motor to shut down, even before the motor has reached its nominal data.

Information about the electrical connection of the temperature sensor can be found in the chapter [▷ 17.6.8].

17.6.5.1 PTC thermistor

The PTC thermistor is installed as a standard temperature sensor in STOBER synchronous servo motors.

The PTC thermistor is a triple thermistor in accordance with DIN 44082 that can be used for monitoring the temperature of each winding phase. The resistance values in the following table and curve refer to a single thermistor in accordance with DIN 44081. These values must be multiplied by 3 for a triple thermistor in accordance with DIN 44082.

Feature	Description
Nominal response temperature ϑ_{NAT}	145 °C ± 5 K
Resistance R −20 °C up to ϑ_{NAT} − 20 K	≤ 250 Ω
Resistance R with ϑ_{NAT} − 5 K	≤ 550 Ω
Resistance R with ϑ_{NAT} + 5 K	≥ 1330 Ω
Resistance R with ϑ_{NAT} + 15 K	≥ 4000 Ω
Operating voltage	≤ DC 7.5 V
Thermal response time	< 5 s
Thermal class	155 (F) in accordance with EN 60034-1 (155 °C, heating Δϑ = 100 K)

Tab. 3: Technical characteristics – Ambient conditions

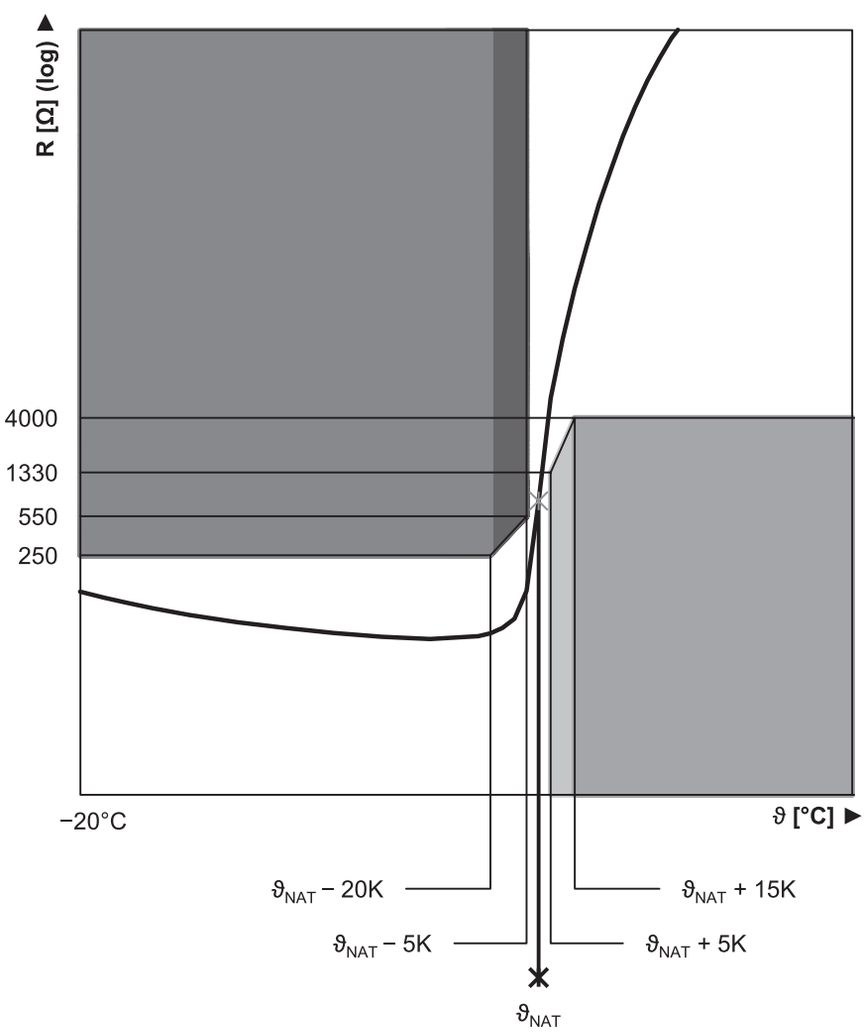

Fig. 2: PTC thermistor curve (single thermistor)

17.6.5.2 Pt1000 temperature sensor

STOBER synchronous servo motors are available in versions with a Pt1000 temperature sensor. The Pt1000 is a temperature-dependent resistor that has a resistance curve with a linear relationship with temperature. As a result, the Pt1000 allows for measurements of the winding temperature. These measurements are limited to one phase of the motor winding, however. In order to adequately protect the motor from exceeding the maximum permitted winding temperature, use a i^2t model in the drive controller to monitor the winding temperature.

Pt1000 temperature sensors can also be used with the One Cable Solution.

Avoid exceeding the specified measurement current so that the measured values are not falsified due to self-heating of the temperature sensor.

Feature	Description
Measurement current (constant)	2 mA
Resistance R for ϑ = 0 °C	1000 Ω
Resistance R for ϑ = 80 °C	1300 Ω
Resistance R for ϑ = 150 °C	1570 Ω

Tab. 4: Technical characteristics – Ambient conditions

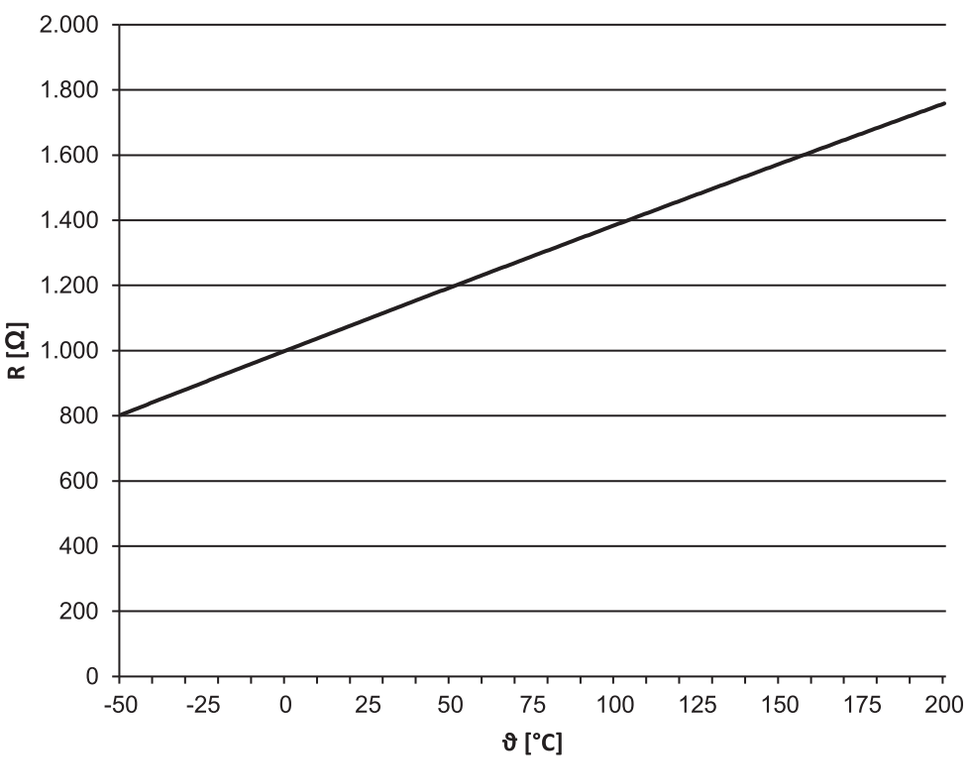

Fig. 3: Pt1000 temperature sensor characteristic curve

17.6.6 Cooling

A synchronous servo motor in the standard version is cooled by convection cooling (IC 410 in accordance with EN 60034-6). Optionally, forced ventilation can be used to cool the motor.

17.6.6.1 Forced ventilation

STOBER synchronous servo motors offer the option of being cooled with forced ventilation in order to increase performance data while maintaining the same size. Retrofitting with a forced ventilation unit is also possible in order to optimize the drive at a later date. When retrofitting, check whether the conductor cross-section of the power cable of the motor must be increased. Also take into account the dimensions of the forced ventilation unit.

The performance data for motors with forced ventilation can be found in the chapter [▷ 17.2] and the dimensional drawings in the chapter [▷ 17.4].

Technical data

Motor	Forced ventilation unit	$U_{N,F}$ [V]	$I_{N,F}$ [A]	$P_{N,F}$ [W]	q_{vF} [m³/h]	$L_{pA,F}$ [dBA]	m_F [kg]	Protection class
EZ4_B	FL4	230 V ± 5%, 50/60 Hz	0.07	10	59	41	1.4	IP44
EZ5_B	FL5		0.10	14	160	45	1.9	IP54
EZ7_B	FL7		0.10	14	160	45	2.9	IP54
EZ8_B	FL8		0.20	26	420	54	5.0	IP55

Terminal assignment for forced ventilation unit plug connectors

Connection diagram	Pin	Connection
	1	L1 (phase)
	2	N (neutral conductor)
	3	
	⏚	PE (grounding conductor)

17.6.7 Holding brake

STOBER synchronous servo motors can be equipped with a backlash-free holding brake using permanent magnets in order to secure the motor shaft when at a standstill. The holding brake engages automatically if the voltage drops.

The holding brake is designed for a high number of operations (B_{10} = 10 million operations, B_{10d} = 20 million operations).

Nominal voltage of permanent magnet holding brake: DC 24 V ± 5%, smoothed.

Observe the following during project configuration:

- The holding brake is designed to keep the motor shaft from moving. Activate braking processes during operation using the corresponding electrical functions of the drive controller. In exceptional circumstances, the holding brake can be used for braking from full speed (following a power failure or when setting up the machine). The maximum permitted work done by friction $W_{B,Rmax/h}$ may not be exceeded.
- Note that the braking torque M_{Bdyn} may initially be up to 50% less when braking from full speed. As a result, the braking effect has a delayed action and braking distances become longer.
- Regularly perform a brake test to ensure the functional safety of the brakes. Details can be found in the documentation of the motor and the drive controller.
- Connect a varistor of type S14 K35 (or comparable) in parallel to the brake coil to protect your machine from switching surges. (Not necessary for connecting the holding brake to STOBER drive controllers of the 5th and 6th generation with a BRS/BRM brake module).
- The holding brake of the motor does not offer adequate safety for persons in the hazardous area of gravity-loaded vertical axes. Therefore take additional measures to minimize risk, e.g. by providing a mechanical substructure for maintenance work.
- Take into consideration voltage losses in the connection cables that connect the voltage source to the holding brake connections.
- The holding torque of the brake can be reduced by shock loading. Information about shock loading can be found in the chapter [▷ 17.6.3].
- At operating temperatures from −15 °C to 0 °C, a cold holding brake in the released state may cause operating noises. As the temperature of the holding brake increases, these noises decrease such that operating noises are not heard when using holding brake at operating temperature in the released state.

Calculation of work done by friction per braking process

$$W_{B,R/B} = \frac{J_{tot} \cdot n^2}{182.4} \cdot \frac{M_{Bdyn}}{M_{Bdyn} \pm M_L}, \; M_{Bdyn} > M_L$$

The sign of M_L is positive if the movement runs vertically upwards or horizontally and it is negative if the movement runs vertically down.

Calculation of the stop time

$$t_{dec} = 2.66 \cdot t_{1B} + \frac{n \cdot J_{tot}}{9.55 \cdot M_{Bdyn}}$$

Switching behavior

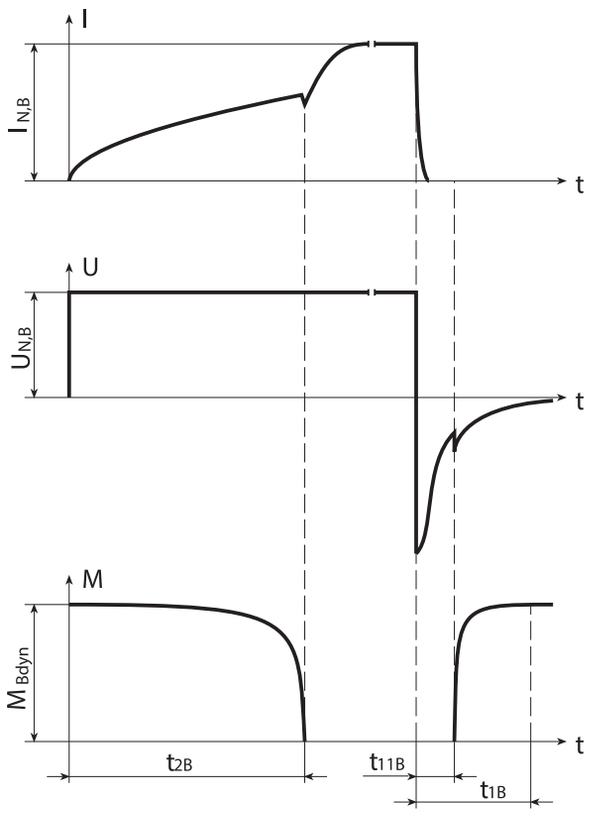

Fig. 4: Holding brake – Switching behavior

Technical data

Type	M_{Bstat} [Nm]	M_{Bdyn} [Nm]	$I_{N,B}$ [A]	$W_{B,Rmax/h}$ [kJ/h]	N_{Bstop}	J_{Bstop} [kgcm²]	$W_{B,Rlim}$ [kJ]	t_{2B} [ms]	t_{11B} [ms]	t_{1B} [ms]	$x_{B,N}$ [mm]	ΔJ_B [kgcm²]	Δm_B [kg]
EZ202	1.2	1.0	0.36	3.0	45000	0.310	70	10	2.0	5	0.15	0.03	0.25
EZ203	1.2	1.0	0.38	3.0	36000	0.390	70	10	2.0	5	0.15	0.03	0.25
EZ301	2.5	2.3	0.51	6.0	48000	0.752	180	25	3.0	20	0.20	0.19	0.55
EZ302	4.0	3.8	0.50	8.5	38000	0.952	180	44	4.0	26	0.30	0.19	0.55
EZ303	4.0	3.8	0.50	8.5	30000	1.17	180	44	4.0	26	0.30	0.19	0.55
EZ401	4.0	3.8	0.50	8.5	16000	2.24	180	44	4.0	26	0.30	0.19	0.76
EZ402	8.0	7.0	0.75	8.5	13500	4.39	300	40	2.0	20	0.30	0.57	0.97
EZ404	8.0	7.0	0.75	8.5	8500	7.09	300	40	2.0	20	0.30	0.57	0.97
EZ501	8.0	7.0	0.75	8.5	8700	6.94	300	40	2.0	20	0.30	0.57	1.19
EZ502	8.0	7.0	0.80	8.5	5200	11.5	300	40	2.0	20	0.30	0.57	1.19
EZ503	15	12	1.0	11.0	5900	18.6	550	60	5.0	30	0.30	1.72	1.62
EZ505	15	12	1.0	11.0	4000	27.8	550	60	5.0	30	0.30	1.72	1.62
EZ701	15	12	1.0	11.0	5400	20.5	550	60	5.0	30	0.30	1.74	1.94
EZ702	15	12	1.0	11.0	3600	30.9	550	60	5.0	30	0.30	1.74	1.94
EZ703	32	28	1.1	25.0	5200	54.6	1400	100	5.0	25	0.40	5.68	2.81
EZ705	32	28	1.1	25.0	3500	79.4	1400	100	5.0	25	0.40	5.68	2.81
EZ813	65	35	1.7	45.0	4500	200	2250	200	10	50	0.40	16.5	5.40
EZ815	115	70	2.1	65.0	7000	376	6500	190	12	65	0.50	55.5	8.40

17.6.8 Connection method

The following chapters describe the connection technology of STOBER synchronous servo motors in the standard version on STOBER drive controllers. You can find further information relating to the drive controller type that was specified in your order in the connection plan that is delivered with every synchronous servo motor.

In Chapter [▶ 18], you can find information about options for connecting STOBER synchronous servo motors to drive controllers from other manufacturers.

17.6.8.1 Connection of the motor housing to the grounding conductor system

Connect the motor housing to the machine's grounding conductor system to protect persons.

All attachment parts required for the connection of the grounding conductor to the motor housing are delivered with the motor. The grounding screw of the motor is identified with the symbol ⏚ in accordance with IEC 60417-DB. The cross-section of the grounding conductor has to be at least as large as the cross-section of the lines in the power connection.

17.6.8.2 Plug connectors (One Cable Solution)

In the One Cable Solution design, the power and encoder lines are connected using a shared plug connector.

For motors with forced ventilation, avoid collisions between the motor connection cables and the plug connector of the forced ventilation unit. In the event of a collision, turn the motor plug connectors accordingly. Details on the position of the plug connector for the forced ventilation unit can be found in the chapter [▶ 17.4.5].

The figures represent the position of the plug connectors upon delivery.

Turning ranges of plug connectors (EZ2 – EZ3 motors)

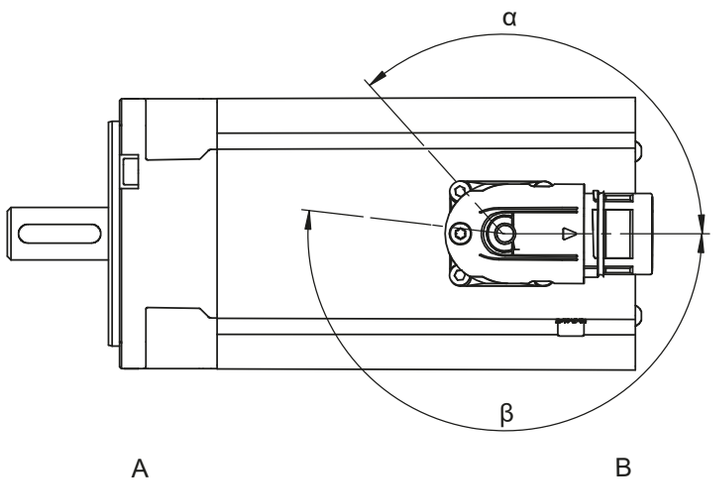

A	Attachment or output side of the motor	B	Not output side

Turning ranges of plug connectors (EZ4 – EZ7 motors)

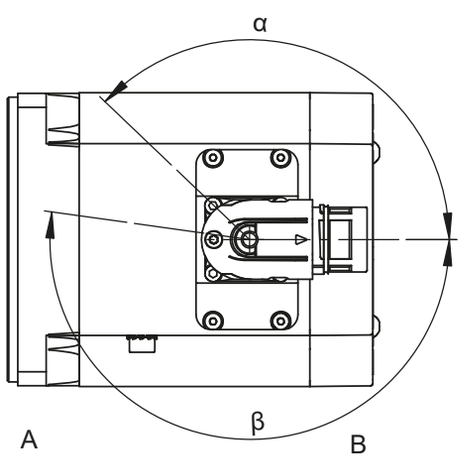

A	Attachment or output side of the motor	B	Not output side

Plug connector features

Motor type	Size	Connection	Turning range	
			α	β
EZ2 – EZ5, EZ701 – EZ703, EZ705U	con.23	Quick lock	130°	190°

Notes

- The number after "con." indicates the approximate external thread diameter of the plug connector in mm (for example, con.23 designates a plug connector with an external thread diameter of about 23 mm).

17.6.8.3 Plug connectors

STOBER synchronous servo motors are equipped with rotatable quick-lock plug connectors in the standard version. Details can be found in this chapter.

For motors with forced ventilation, avoid collisions between the motor connection cables and the plug connector of the forced ventilation unit. In the event of a collision, turn the motor plug connectors accordingly. Details on the position of the plug connector for the forced ventilation unit can be found in the chapter [▶ 17.4.6].

The figures represent the position of the plug connectors upon delivery.

Turning ranges of plug connectors (EZ2 – EZ3 motors)

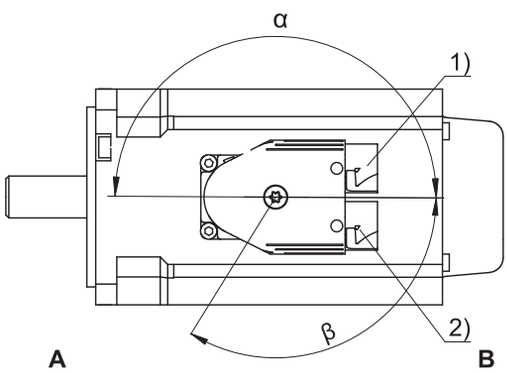

1	Power plug connector	2	Encoder plug connector
A	Attachment or output side of the motor	B	Not output side

Turning ranges of plug connectors (EZ4 – EZ8 motors)

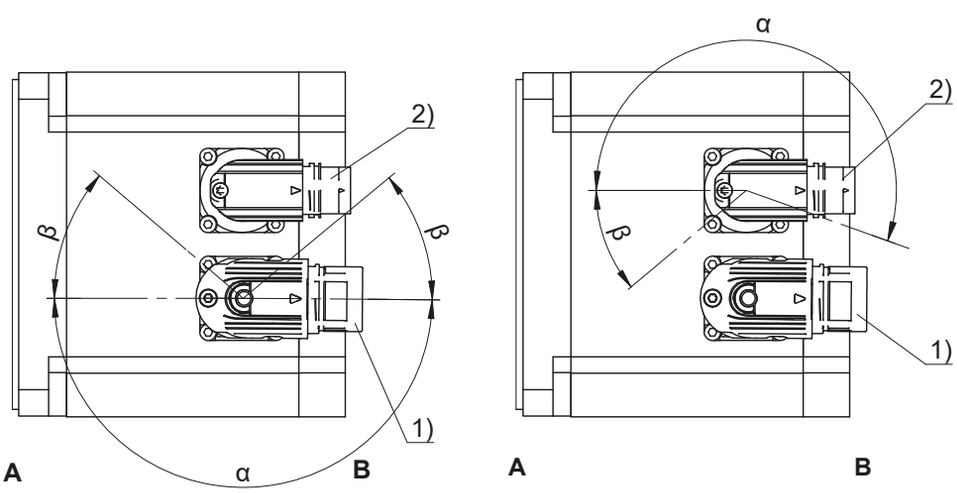

1	Power plug connector	2	Encoder plug connector
A	Attachment or output side of the motor	B	Not output side

Power plug connector features

Motor type	Size	Connection	Turning range	
			α	β
EZ2, EZ3	con.15	Quick lock	180°	120°
EZ4, EZ5, EZ701, EZ702, EZ703	con.23	Quick lock	180°	40°
EZ705, EZ8	con.40	Quick lock	180°	40°

Encoder plug connector features

Motor type	Size	Connection	Turning range	
			α	β
EZ2, EZ3	con.15	Quick lock	180°	120°
EZ4, EZ5, EZ7, EZ8	con.17	Quick lock	190°	35°

Notes

- The number after "con." indicates the approximate external thread diameter of the plug connector in mm (for example, con.23 designates a plug connector with an external thread diameter of about 23 mm).
- In turning range β, the power or encoder plug connectors can be turned only if doing so does not cause them to collide.
- For the EZ2/EZ3 motor, the power and encoder plug connectors are mechanically connected and can only be turned together.

17.6.8.4 Terminal assignment for plug connectors (One Cable Solution)

In the One Cable Solution design, the power and encoder lines are connected using a shared plug connector.

The temperature sensor of the motor is connected to the encoder internally. The measured values from the temperature sensor are transmitted via the EnDat 3 protocol of the encoder.

Plug connector size con.23

Connection diagram	Pin	Connection
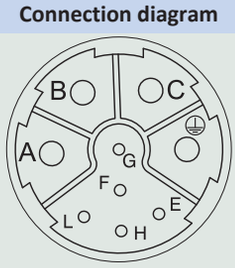	A	1U1 (U phase)
	B	1V1 (V phase)
	C	1W1 (W phase)
	E	P_SD −
	F	
	G	1BD1 (brake +)
	H	P_SD +
	L	1BD2 (brake −)
	⏚	PE (grounding conductor)

17.6.8.5 Connection assignment of the power plug connector

The size and connection diagram of the power plug connector depend on the size of the motor.

Plug connector size con.15

Connection diagram	Pin	Connection
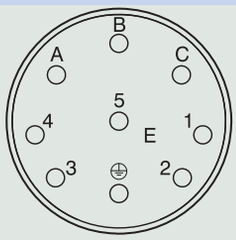	A	1U1 (U phase)
	B	1V1 (V phase)
	C	1W1 (W phase)
	1	1TP1 (temperature sensor +)
	2	1TP2 (temperature sensor –)
	3	1BD1 (brake +)
	4	1BD2 (brake –)
	5	
	⏚	PE (grounding conductor)

Plug connector size con.23

Connection diagram	Pin	Connection
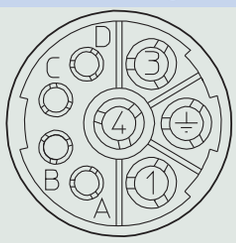	1	1U1 (U phase)
	3	1V1 (V phase)
	4	1W1 (W phase)
	A	1BD1 (brake +)
	B	1BD2 (brake –)
	C	1TP1 (temperature sensor +)
	D	1TP2 (temperature sensor –)
	⏚	PE (grounding conductor)

Plug connector size con.40

Connection diagram	Pin	Connection
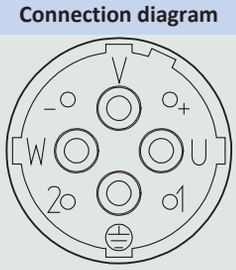	U	1U1 (U phase)
	V	1V1 (V phase)
	W	1W1 (W phase)
	+	1BD1 (brake +)
	–	1BD2 (brake –)
	1	1TP1 (temperature sensor +)
	2	1TP2 (temperature sensor –)
	⏚	PE (grounding conductor)

17.6.8.6 Connection assignment of the encoder plug connector

The size and terminal assignment of the encoder plug connectors depend on the model of encoder installed and the size of the motor.

EnDat 2.2 digital encoder, plug connector size con.15

Connection diagram	Pin	Connection
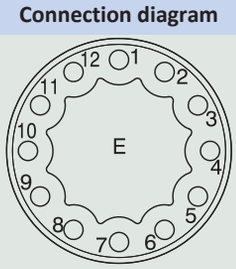	1	Clock +
	2	
	3	
	4	
	5	Data –
	6	Data +
	7	
	8	Clock –
	9	
	10	0 V GND
	11	
	12	Up +

EnDat 2.2 digital encoder, plug connector size con.17

Connection diagram	Pin	Connection
	1	Clock +
	2	
	3	
	4	
	5	Data −
	6	Data +
	7	
	8	Clock −
	9	
	10	0 V GND
	11	
	12	Up +

EnDat 2.1 encoder with sin/cos incremental signals, plug connector size con.15

Connection diagram	Pin	Connection
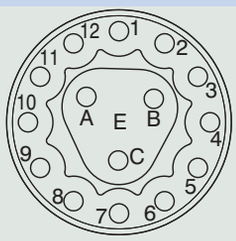	1	Up sense
	2	0 V sense
	3	Up +
	4	Clock +
	5	Clock −
	6	0 V GND
	7	B + (Sin +)
	8	B − (Sin −)
	9	Data +
	10	A + (Cos +)
	11	A − (Cos −)
	12	Data −
	A	
	B	
	C	

EnDat 2.1 encoder with sin/cos incremental signals, plug connector size con.17

Connection diagram	Pin	Connection
	1	Up sense
	2	
	3	
	4	0 V sense
	5	
	6	
	7	Up +
	8	Clock +
	9	Clock −
	10	0 V GND
	11	
	12	B + (Sin +)
	13	B − (Sin −)
	14	Data +
	15	A + (Cos +)
	16	A − (Cos −)
	17	Data −

Resolver, plug connector size con.15

Connection diagram	Pin	Connection
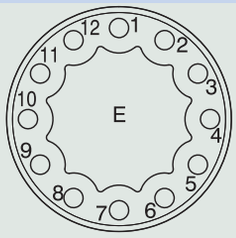	1	S3 Cos +
	2	S1 Cos −
	3	S4 Sin +
	4	S2 Sin −
	5	
	6	
	7	R2 Ref +
	8	R1 Ref −
	9	
	10	
	11	
	12	

Resolver, plug connector size con.17

Connection diagram	Pin	Connection
	1	S3 Cos +
	2	S1 Cos −
	3	S4 Sin +
	4	S2 Sin −
	5	
	6	
	7	R2 Ref +
	8	R1 Ref −
	9	
	10	
	11	
	12	

17.7 Project configuration

Project your drives using our SERVOsoft designing software. Download SERVOsoft free of charge after registration at https://www.stoeber.de/en/services/info-servosoft/.

It is the most convenient and reliable method of drive selection, as the entire torque/speed curve of the application is displayed and evaluated here in the curve of the geared motor.

In this chapter, only limit values for specific operating points can be taken into consideration for manual drive selection.

An explanation of the formula symbols can be found in Chapter [▷ 20.1].

The formula symbols for values actually present in the application are marked with *.

17.7.1 Drive selection

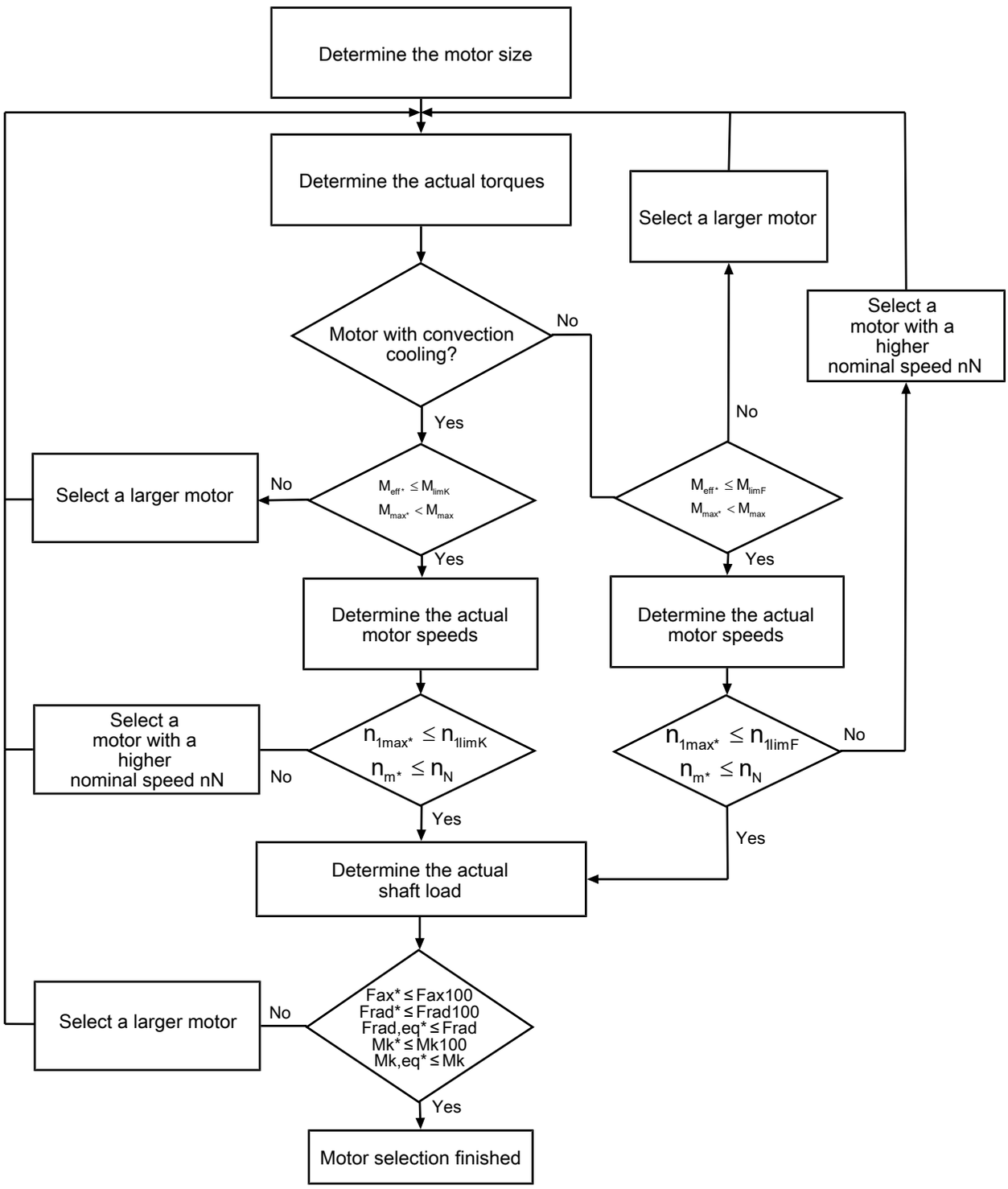

The value for M_{lim}, M_{limK}, M_{limF}, M_{max}, n_{1limK} and n_{1limF} can be found in the motor characteristic curve in the chapter [▶ 17.3]. Note the size, nominal speed n_N and cooling type of the motor.

Example of cyclic operation

The following calculations refer to a representation of the power delivered at the motor shaft in accordance with the following example:

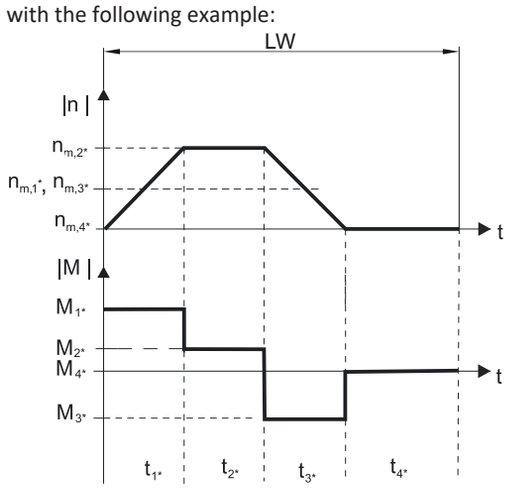

Calculation of the actual average input speed

$$n_{m*} = \frac{|n_{m,1*}| \cdot t_{1*} + \ldots + |n_{m,n*}| \cdot t_{n*}}{t_{1*} + \ldots + t_{n*}}$$

If $t_{1*} + \ldots + t_{3*} \geq 6$ min, determine n_{m*} without the rest phase t_{4*}.

Calculation of the actual effective torque

$$M_{eff*} = \sqrt{\frac{t_{1*} \cdot M_{1*}^{\ 2} + \ldots + t_{n*} \cdot M_{n*}^{\ 2}}{t_{1*} + \ldots + t_{n*}}}$$

17.7.2 Permitted shaft loads

This chapter contains information about the maximum permitted shaft loads of the output shaft of the motor.

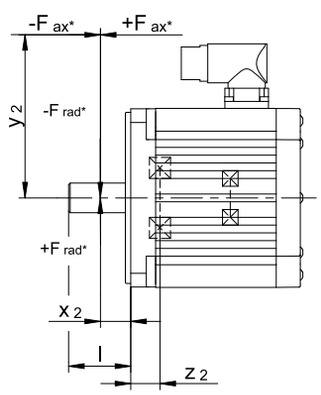

Type	z_2 [mm]	F_{ax100} [N]	F_{rad100} [N]	M_{k100} [Nm]
EZ202	12.0	250	750	20
EZ203	12.0	250	750	20
EZ301	24.0	350	1000	39
EZ302	24.0	350	1000	39
EZ303	24.0	350	1000	39
EZ401	19.5	550	1800	62
EZ402	19.5	550	1800	71
EZ404	19.5	550	1800	71
EZ501	19.5	750	2000	79
EZ502	19.5	750	2400	95
EZ503	19.5	750	2400	107
EZ505	19.5	750	2400	107
EZ701	24.5	1300	3500	173
EZ702	24.5	1300	4200	208
EZ703	24.5	1300	4200	208
EZ705	24.5	1300	4200	225
EZ813	28.5	1750	5600	384
EZ815	28.5	1750	5600	384

The values for permitted shaft loads specified in the table apply:

- For shaft dimensions in accordance with the catalog
- A force applied at the center of the output shaft: $x_2 = l / 2$ (shaft dimensions can be found in the chapter [▶ 17.4])
- Output speeds $n_{m*} \leq 100$ rpm ($F_{ax} = F_{ax100}$; $F_{rad} = F_{rad100}$; $M_k = M_{k100}$)

The following applies to output speeds $n_{m*} > 100$ rpm:

$$F_{ax} = \frac{F_{ax100}}{\sqrt[3]{\frac{n_{m*}}{100\ \text{rpm}}}} \qquad F_{rad} = \frac{F_{rad100}}{\sqrt[3]{\frac{n_{m*}}{100\ \text{rpm}}}} \qquad M_k = \frac{M_{k100}}{\sqrt[3]{\frac{n_{m*}}{100\ \text{rpm}}}}$$

The following applies to other force application points:

$$M_{k*} = \frac{2 \cdot F_{ax*} \cdot y_2 + F_{rad*} \cdot (x_2 + z_2)}{1000}$$

For applications with multiple axial and/or radial forces, you must add the forces as vectors.

Also note the calculation for equivalent values:

$$M_{k,eq*} = \sqrt[3]{\frac{|n_{m,1*}| \cdot t_{1*} \cdot |M_{k,1*}{}^3| + \ldots + |n_{m,n*}| \cdot t_{n*} \cdot |M_{k,n*}{}^3|}{|n_{m,1*}| \cdot t_{1*} + \ldots + |n_{m,n*}| \cdot t_{n*}}}$$

$$F_{rad,eq*} = \sqrt[3]{\frac{|n_{m,1*}| \cdot t_{1*} \cdot |F_{rad,1*}{}^3| + \ldots + |n_{m,n*}| \cdot t_{n*} \cdot |F_{rad,n*}{}^3|}{|n_{m,1*}| \cdot t_{1*} + \ldots + |n_{m,n*}| \cdot t_{n*}}}$$

17.7.3 Derating

If you use the motor under ambient conditions that differ from the standard ambient conditions, the nominal torque M_N of the motor is reduced. In this chapter, you can find information for calculating the reduced nominal torque.

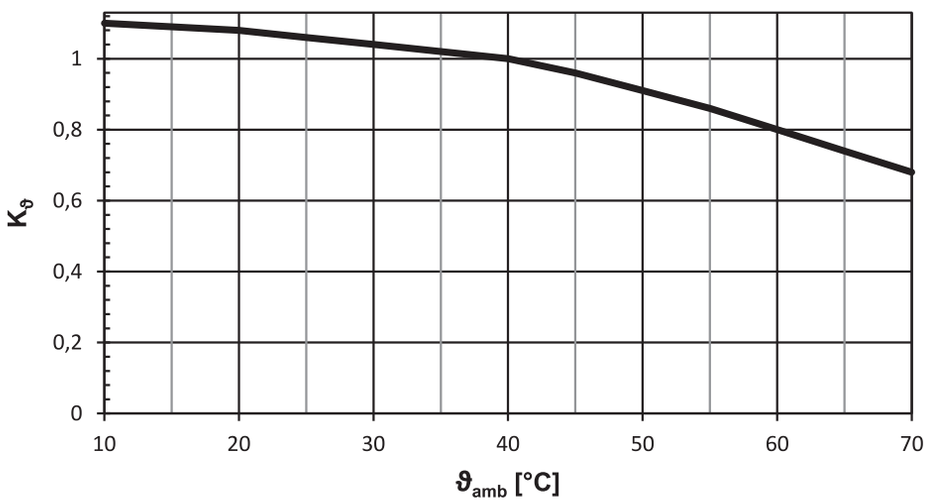

Fig. 5: Derating depending on the surrounding temperature

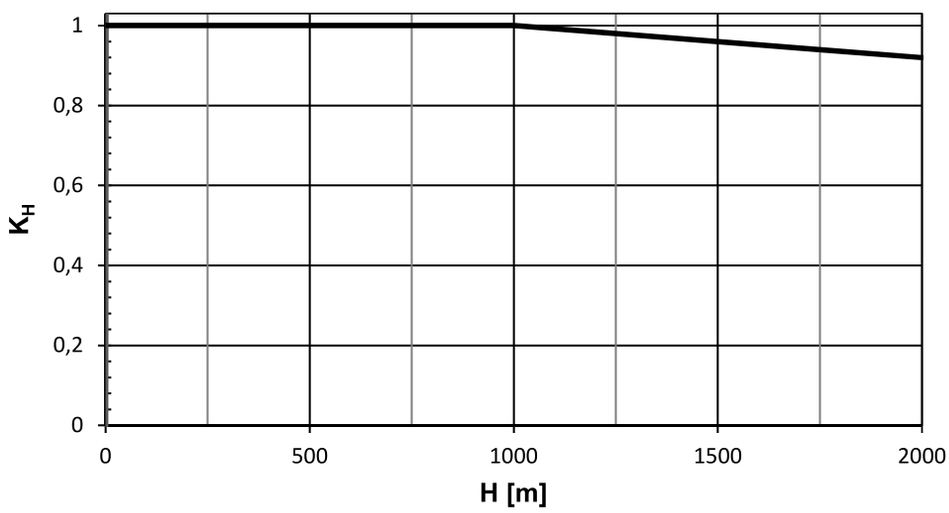

Fig. 6: Derating depending on the installation height

Calculation

If surrounding temperature ϑ_{amb} > 40 °C:

$M_{Nred} = M_N \cdot K_\vartheta$

If installation altitude H > 1000 m above sea level:

$M_{Nred} = M_N \cdot K_H$

If the surrounding temperature ϑ_{amb} > 40 °C and installation altitude H > 1000 m above sea level:

$M_{Nred} = M_N \cdot K_H \cdot K_\vartheta$

17.8 Further information

17.8.1 Directives and standards

STOBER synchronous servo motors meet the requirements of the following directives and standards:

- (Low Voltage) Directive 2014/35/EU
- EN 60034-1:2010 + Cor.:2010
- EN 60034-5:2001 + A1:2007
- EN 60034-6:1993

17.8.2 Identifiers and test symbols

STOBER synchronous servo motors have the following identifiers and test symbols:



CE mark: The product meets the requirements of EU directives.



UKCA mark: The product meets the requirements of UK directives.



cURus test symbol "Servo and Stepper Motors – Component"; registered under UL number E488992 with Underwriters Laboratories USA.

17.8.3 Additional documentation

Additional documentation related to the product can be found at
http://www.stoeber.de/en/downloads/

Enter the ID of the documentation in the Search term field.

Documentation	ID
Operating manual for EZ synchronous servo motors	443032_en

18 Connecting to drive controllers of third-party manufacturers

Table of contents

18.1 General notes ... 605

18.1.1 Nominal data ... 605

18.1.2 Plug connectors (One Cable Solution) ... 606

18.1.3 Plug connectors ... 607

18.1.4 Connection cables ... 608

18.2 Connection to B&R drive controllers ... 609

18.2.1 Encoders ... 609

18.2.2 Resolver ... 609

18.2.3 Possible combinations with drive controllers ... 610

18.2.4 Connection assignment of the power plug connector ... 610

18.2.5 Connection assignment of the encoder plug connector ... 611

18.2.6 Terminal assignment for plug connectors (One Cable Solution) ... 612

18.3 Connection to Control Techniques drive controllers ... 613

18.3.1 Encoder ... 613

18.3.2 Possible combinations with drive controllers ... 613

18.3.3 Terminal assignment of the power plug connector ... 614

18.3.4 Terminal assignment of the encoder plug connector ... 614

18.3.5 Terminal assignment for plug connectors (One Cable Solution) ... 615

18.4 Connection to Siemens drive controllers ... 616

18.4.1 Encoders ... 616

18.4.2 Resolver ... 616

18.4.3 Possible combinations with drive controllers ... 617

18.4.4 Connection assignment of the power plug connector ... 617

18.4.5 Connection assignment of the encoder plug connector ... 618

18.5 Connection to Kollmorgen drive controllers ... 619

18.5.1 Encoders ... 619

18.5.2 Resolver ... 619

18.5.3 Possible combinations with drive controllers ... 620

18.5.4 Connection assignment of the power plug connector ... 620

18.5.5 Connection assignment of the encoder plug connector ... 621

18.6 Connection to Bosch Rexroth drive controllers ... 622

18.6.1 Encoders ... 622

18.6.2 Possible combinations with drive controllers ... 622

18.6.3 Connection assignment of the power plug connector ... 623

18.6.4 Connection assignment of the encoder plug connector ... 624

18.7 Connection to Beckhoff drive controllers ... 625

18.7.1 Encoders ... 625

18.7.2 Possible combinations with drive controllers ... 626

18.7.3 Terminal assignment of 8-pin power plug connector ... 626

18.7.4 Terminal assignment of 9-pin power plug connector ... 627

18.7.5 Connection assignment of the encoder plug connector 627
18.7.6 Terminal assignment for plug connectors (One Cable Solution) 628
18.8 Connection to Allen-Bradley drive controllers 629
18.8.1 Encoders 629
18.8.2 Possible combinations with drive controllers 629
18.8.3 Terminal assignment of the power plug connector 630
18.8.4 Terminal assignment of the encoder plug connector 630
18.8.5 Terminal assignment for plug connectors (One Cable Solution) 631

18.1 General notes

STOBER synchronous servo motors are designed for connection to STOBER drive controllers in the standard version. STOBER offers an extensive assortment of high-quality, trusted power and encoder connection cables for this purpose. However, STOBER synchronous servo motors can also be operated on drive controllers from third-party manufacturers. Notes and information for this purpose can be found in the following chapters. You can find all other information about STOBER synchronous servo motors in the chapter [▷ 17].

18.1.1 Nominal data

Nominal data for synchronous servo motors specified in the selection tables of this catalog were calculated for connecting to STOBER drive controllers. Note that this nominal data may change when STOBER synchronous servo motors are connected to drive controllers of third-party manufacturers. The following drive controller plug connectors are determining factors here:

- f_{2PU}
- $f_{PWM,PU}$
- U_{ZK}
- Compensation of the field weakening range.

The maximum achievable speed of a synchronous servo motor depends on the number of pole pairs (p) of the synchronous servo motor and, if applicable, on the restriction of f_{2PU} by Regulation (EC) No. 428/2009 (EC Dual Use Regulation). Details are shown in the figure below.

Some encoders feature integrated temperature monitoring, the warning and switch-off thresholds of which may overlap with the corresponding values set for the thermal winding protection in the drive controller. In some cases, this may result in an instance where an encoder with internal temperature monitoring forces the motor to shut down, even before the motor has reached its nominal data.

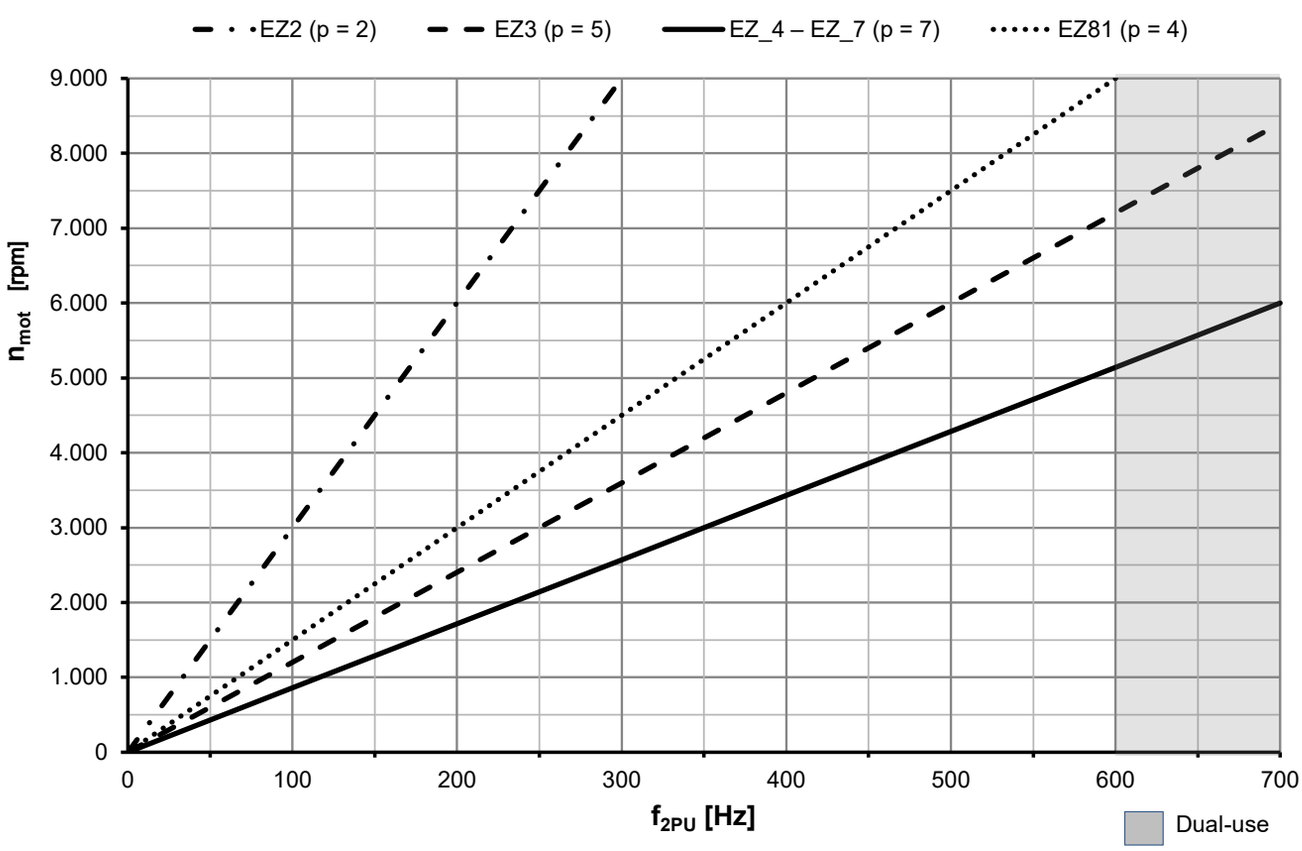

Fig. 1: Speed/frequency graph for EZ motors

18.1.2 Plug connectors (One Cable Solution)

The One Cable Solution option is available for B&R, Control Techniques, Beckhoff, and Allen-Bradley drive controllers.

In the One Cable Solution design, the power and encoder lines are connected using a shared plug connector.

For motors with forced ventilation, avoid collisions between the motor connection cables and the plug connector of the forced ventilation unit. In the event of a collision, turn the motor plug connectors accordingly. Details on the position of the plug connector for the forced ventilation unit can be found in the chapter [▶ 17.4.5].

The figures represent the position of the plug connectors upon delivery.

Turning ranges of plug connectors (EZ2 – EZ3 motors)

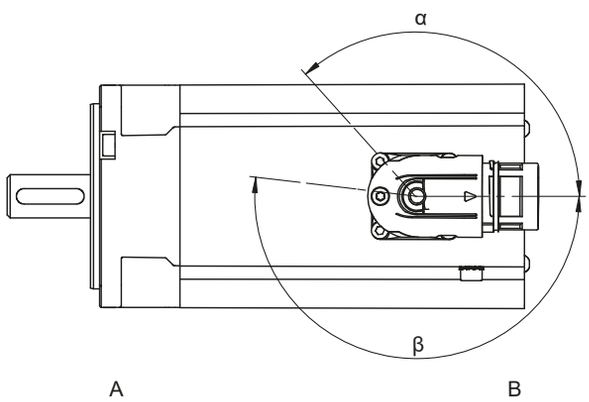

A	Attachment or output side of the motor	B	Not output side

Turning ranges of plug connectors (EZ4 – EZ7 motors)

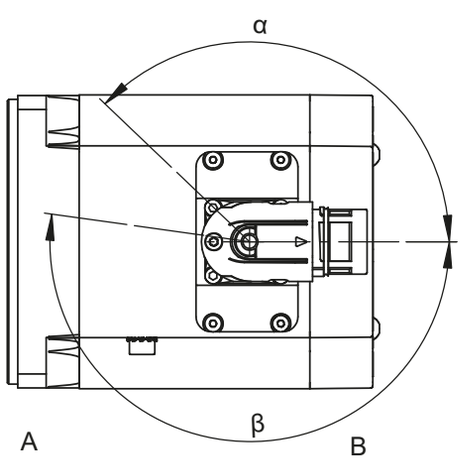

A	Attachment or output side of the motor	B	Not output side

Features of B&R/Beckhoff plug connectors

Motor type	Size	Connection	Turning range	
			α	β
EZ2 – EZ5, EZ701 – EZ703, EZ705U, EZ705B (n_N=3000 rpm)	con.23	Quick lock	130°	190°

Features of Allen-Bradley plug connectors

Motor type	Size	Connection	Turning range	
			α	β
EZ3 – EZ5, EZ701 – EZ703, EZ705U (n_N=3000 rpm)	con.23	Quick lock	130°	190°
EZ705U (n_N=4500 rpm), EZ705B, EZ813U	con.40	Quick lock	130°	190°

Notes

- The number after "con." indicates the approximate external thread diameter of the plug connector in mm (for example, con.23 designates a plug connector with an external thread diameter of about 23 mm).

18.1.3 Plug connectors

STOBER synchronous servo motors are equipped with angled, round plug connectors (INTERCONTEC brand) for power and encoder connection in the standard version. You can find detailed technical information about the plug connectors at http://www.intercontec.biz.

For motors with forced ventilation, avoid collisions between the motor connection cables and the plug connector of the forced ventilation unit. In the event of a collision, turn the motor plug connectors accordingly. Details on the position of the plug connector for the forced ventilation unit can be found in the chapter [▶ 17.4.6].

The figures represent the position of the plug connectors upon delivery.

Turning ranges of con.15 ytec plug connectors (motors EZ2 – EZ3, EZ401, EZ402) for connection to B&R drive controllers (drive controller code GY)

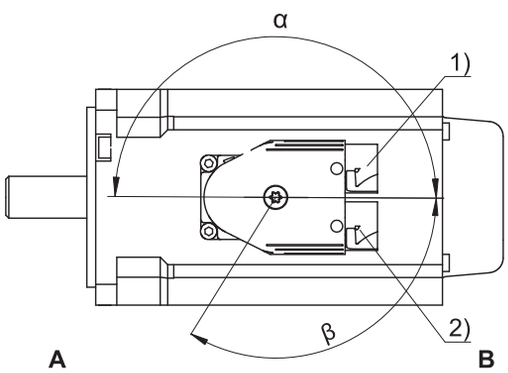

Turning ranges of plug connectors (EZ2 – EZ3 motors)

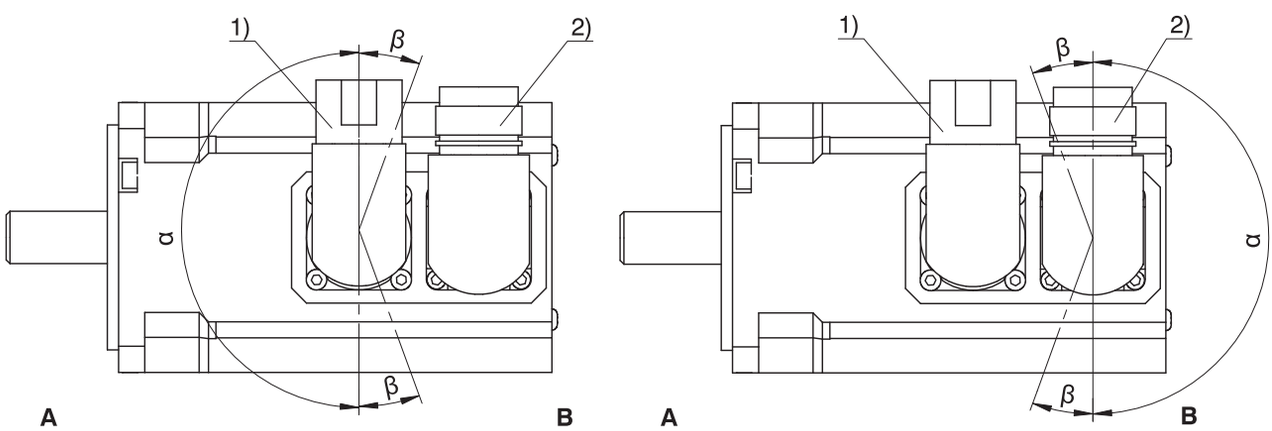

Turning ranges of plug connectors (EZ4 – EZ8 motors)

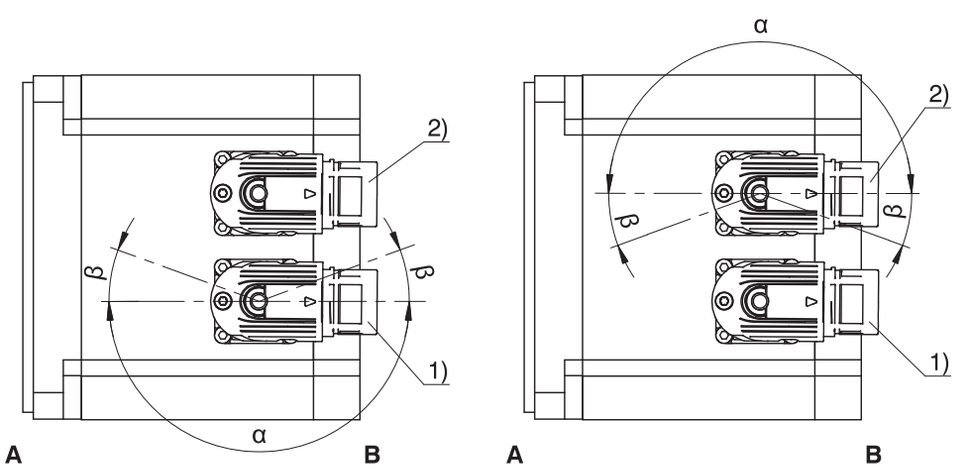

1	Power plug connector	2	Encoder plug connector
A	Attachment or output side of the motor	B	Not output side

Power plug connector features

Motor type	Size	Connection	Turning range	
			α	β
EZ2 – EZ3, EZ401, EZ402	con.15[1]	Quick lock (ytec)	180°	140°
EZ2 – EZ5, EZ701, EZ703	con.23	Quick lock	180°	40°
EZ705, EZ8	con.40	Quick lock	180°	40°

Encoder plug connector features

Motor type	Size	Connection	Turning range	
			α	β
EZ2 – EZ3, EZ401, EZ402	con.15[2]	Quick lock (ytec)	180°	140°
EZ2 – EZ8	con.15[3]	Quick lock (itec)	180°	20°
EZ2 – EZ8	con.23	Quick lock	180°	20°

Notes

- In turning range β, the power or encoder plug connectors can be turned only if doing so does not cause them to collide.
- The number after "con." indicates the approximate external thread diameter of the plug connector in mm (for example, con.23 designates a plug connector with an external thread diameter of about 23 mm).
- With ytec plug connectors, the power and encoder plug connectors are mechanically connected and can only be turned together.

18.1.4 Connection cables

The plug connectors and terminal assignment of STOBER synchronous servo motors are designed for connecting to drive controllers from third-party manufacturers in such a way that allows you to connect the original cable of the respective manufacturer. Keep the following information regarding cable quality and design in mind.

- Because the original cable from Bosch Rexroth cannot be used, STOBER offers suitable cables for this purpose. More detailed information is available from your STOBER customer consultant.
- Ensure that the cable quality and cable design is suitable for the ambient conditions at the installation location.

You can find more detailed information on our cables in the connection method manual, ID 443101.

Enter the ID of the manual in the Search term field at http://www.stoeber.de/en/downloads/.

[1] Only for connection to B&R ACOPOSmulti with EnDat 2.2 Interface (drive controller code GY)

[2] Only for connection to B&R ACOPOSmulti with EnDat 2.2 Interface (drive controller code GY)

[3] Only for connection to B&R ACOPOSmulti with EnDat 2.2 interface (drive controller code GG and GY).

18.2 Connection to B&R drive controllers

This chapter contains the information for connecting STOBER synchronous servo motors to drive controllers of the above-named manufacturer which differs from connecting to STOBER drive controllers. You can find all other information about STOBER synchronous servo motors in the chapter [▶ 17].

STOBER has taken the following measures to minimize the effort of commissioning STOBER motors connected to B&R drive controllers and avoid errors during parameterization:

- The commutation offset of the motor was set so that calibration by the customer is not necessary.
- The electronic nameplate of the motor was designed to be compatible with the B&R controllers.

More information on commissioning EZ motors connected to B&R drive controllers can be found in the 443184_en document in the download area on the STOBER website.

18.2.1 Encoders

Encoders with EnDat 2.2 interface

Encoder model	Code	Measuring method	Recordable revolutions	Resolution	Position values per revolution	MTTF [years]	PFH [h]
EnDat 2.2 EQI 1131 Safety	S2	Inductive	4096	19 bit	524288	> 100	$\leq 15 \times 10^{-9}$
EnDat 2.2 EQN 1135 Safety	S3	Optical	4096	23 bit	8388608	> 100	$\leq 15 \times 10^{-9}$
EnDat 2.2 ECI 1118-G2	C5	Inductive	–	18 bit	262144	> 76	$\leq 1.5 \times 10^{-6}$

Encoders with EnDat 2.1 interface

Encoder model	Code	Measuring method	Recordable revolutions	Resolution	Position values per revolution	Periods per revolution	MTTF [years]	PFH [h]
EnDat 2.1 EQN 1125	Q4	Optical	4096	13 bit	8192	Sin/cos 512	> 57	$\leq 2 \times 10^{-6}$
EnDat 2.1 ECI 1118-G3	C2	Inductive	–	18 bit	262144	Sin/cos 16	> 100	$\leq 6 \times 10^{-7}$
EnDat 2.1 EQI 1130-G3	Q2	Inductive	4096	18 bit	262144	Sin/cos 16	> 100	$\leq 6 \times 10^{-7}$

Notes

- The encoder code is a part of the type designation of the motor.
- Safety = Safety-related position measuring system for use in safety-oriented applications.
- Multiple revolutions of the motor shaft can be recorded only using multi-turn encoders.

18.2.2 Resolver

In this chapter, you can find detailed technical data for the resolver that can be installed as an encoder in a STOBER synchronous servo motor.

Feature	Description
Code	R0
Number of poles	2
Input voltage U_{1eff}	7 V ± 5%
Input frequency f_1	10 kHz
Output voltage $U_{2,S1–S3}$	$K_{tr} \cdot U_{R1–R2} \cdot \cos \theta$
Output voltage $U_{2,S2–S4}$	$K_{tr} \cdot U_{R1–R2} \cdot \sin \theta$
Transformation ratio K_{tr}	0.5 ± 5%
Electrical fault	±10 arcmin
MTTF	> 100 years
PFH	$\leq 10^{-9}$

Tab. 1: Technical characteristics – Ambient conditions

18.2.3 Possible combinations with drive controllers

The following table shows the possible combinations of STOBER synchronous servo motors with drive controllers from B&R depending on the encoder model.

Drive controller		**ACOPOS** (EnDat 2.1; resolver)	**ACOPOSmulti** (EnDat 2.1; resolver)	**ACOPOSmulti** (EnDat 2.2)	**ACOPOS P3** (EnDat 2.2)	**ACOPOS P3 (OCS)** (EnDat 2.2)	**ACOPOSmulti (OCS)** (EnDat 2.2)
Drive controller code		FG	FV	GG	GY	GP	GV
Connection plan ID		442313	442444	442677	443095	443022	443092
Encoder	**Encoder code**						
EnDat 2.2 EQI 1131 Safety	S2	–	–	EZ	EZ	EZ	EZ
EnDat 2.2 EQN 1135 Safety	S3	–	–	EZ	EZ	EZ	EZ
EnDat 2.2 ECI 1118-G2	C5	–	–	EZ	EZ	–	–
EnDat 2.1 EQN 1125	Q4	EZ	EZ	–	–	–	–
EnDat 2.1 ECI 1118-G3	C2	–	EZ	–	–	–	–
EnDat 2.1 EQI 1130-G3	Q2	–	EZ	–	–	–	–
Resolvers	R0	EZ	EZ	–	–	–	–

The encoder and drive controller codes are a part of the type designation of the motor.

18.2.4 Connection assignment of the power plug connector

The size and connection diagram of the power plug connector depend on the size of the motor.

Plug connector size con.15

Connection diagram	**Pin**	**Connection**
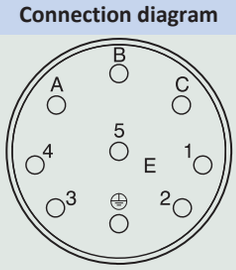	A	1U1 (U phase)
	B	1V1 (V phase)
	C	1W1 (W phase)
	1	1TP1 (temperature sensor +)
	2	1TP2 (temperature sensor –)
	3	1BD1 (brake +)
	4	1BD2 (brake –)
	5	
	⏚	PE (grounding conductor)

Plug connector size con.23

Connection diagram	**Pin**	**Connection**
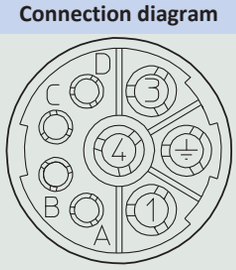	1	1U1 (U phase)
	3	1W1 (W phase)
	4	1V1 (V phase)
	A	1TP1 (temperature sensor +)
	B	1TP2 (temperature sensor –)
	C	1BD1 (brake +)
	D	1BD2 (brake –)
	⏚	PE (grounding conductor)

Plug connector size con.40

Connection diagram	Pin	Connection
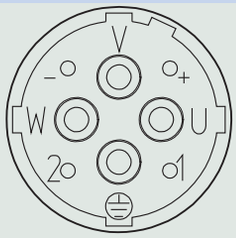	U	1U1 (U phase)
	V	1V1 (V phase)
	W	1W1 (W phase)
	+	1BD1 (brake +)
	–	1BD2 (brake –)
	1	1TP1 (temperature sensor +)
	2	1TP2 (temperature sensor –)
	⏚	PE (grounding conductor)

18.2.5 Connection assignment of the encoder plug connector

The size and terminal assignment of the encoder plug connectors depend on the model of encoder installed and the size of the motor.

EnDat 2.2 digital encoder, plug connector size con.15

Connection diagram	Pin	Connection
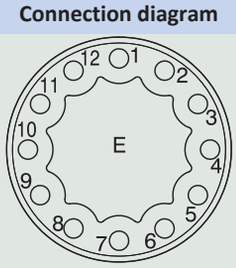	1	Up +
	2	Data +
	3	Data –
	4	Clock +
	5	Clock –
	6	
	7	0 V GND
	8	
	9	
	10	
	11	
	12	

EnDat 2.1 encoder with sin/cos incremental signals, plug connector size con.23

Connection diagram	Pin	Connection
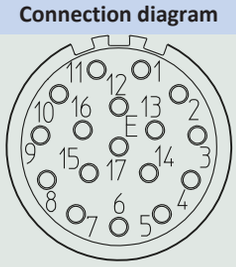	1	Up sense
	2	
	3	
	4	0 V sense
	5	
	6	
	7	Up +
	8	Clock +
	9	Clock –
	10	0 V GND
	11	
	12	B + (Sin +)
	13	B – (Sin –)
	14	Data +
	15	A + (Cos +)
	16	A – (Cos –)
	17	Data –

Resolver, plug connector size con.23

Connection diagram	Pin	Connection
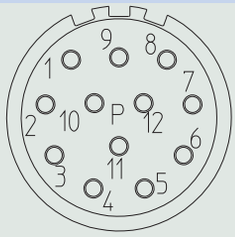	1	
	2	
	3	S4 Sin +
	4	S1 Cos −
	5	R2 Ref +
	6	
	7	S2 Sin −
	8	S3 Cos +
	9	R1 Ref −
	10	
	11	
	12	

18.2.6 Terminal assignment for plug connectors (One Cable Solution)

In the One Cable Solution design, the power and encoder lines are connected using a shared plug connector.

The temperature sensor of the motor is connected to the encoder internally. The measured values from the temperature sensor are transmitted via the log of the encoder.

Plug connector size con.23

Connection diagram	Pin	Connection
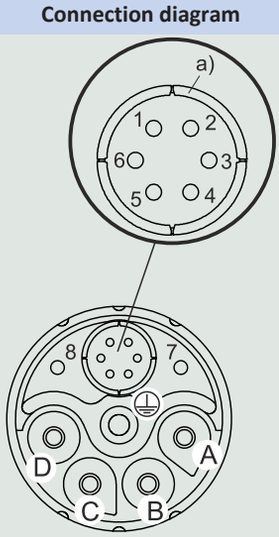	A	1U1 (U phase)
	B	1V1 (V phase)
	C	1W1 (W phase)
	D	
	1	Up +
	2	0 V GND
	3	Data +
	4	Data −
	5	Clock +
	6	Clock −
	7	1BD2 (brake −)
	8	1BD1 (brake +)
	⏚	PE (grounding conductor)

a) Coaxial shield to which the shield of the encoder cores is connected

18.3 Connection to Control Techniques drive controllers

This chapter contains the information for connecting STOBER synchronous servo motors to drive controllers of the above-named manufacturer which differs from connecting to STOBER drive controllers. You can find all other information about STOBER synchronous servo motors in the chapter [▶ 17].

STOBER has taken the following measures to minimize the effort of commissioning STOBER motors connected to Control Techniques drive controllers and avoid errors during parameterization:

- The commutation offset of the motor was set so that calibration by the customer is not necessary.
- Parameter lists are provided on request.

More information on commissioning EZ motors connected to Control Techniques drive controllers can be found in the 443487_en document in the download area on the STOBER website.

18.3.1 Encoder

Encoders with EnDat 2.2 interface

Encoder model	Code	Measuring method	Recordable revolutions	Resolution	Position values per revolution	MTTF [years]	PFH [h]
EnDat 2.2 EQI 1131 Safety	S2	Inductive	4096	19 bit	524288	> 100	$\leq 15 \times 10^{-9}$
EnDat 2.2 EQN 1135 Safety	S3	Optical	4096	23 bit	8388608	> 100	$\leq 15 \times 10^{-9}$

Encoders with EnDat 2.1 interface

Encoder model	Code	Measuring method	Recordable revolutions	Resolution	Position values per revolution	Periods per revolution	MTTF [years]	PFH [h]
EnDat 2.1 EQN 1125	Q4	Optical	4096	13 bit	8192	Sin/cos 512	> 57	$\leq 2 \times 10^{-6}$
EnDat 2.1 ECI 1118-G3	C2	Inductive	–	18 bit	262144	Sin/cos 16	> 100	$\leq 6 \times 10^{-7}$
EnDat 2.1 EQI 1130-G3	Q2	Inductive	4096	18 bit	262144	Sin/cos 16	> 100	$\leq 6 \times 10^{-7}$

Notes

- The encoder code is a part of the type designation of the motor.
- Safety = Safety-related position measuring system for use in safety-oriented applications.
- Multiple revolutions of the motor shaft can be recorded only using multi-turn encoders.

18.3.2 Possible combinations with drive controllers

The following table shows the possible combinations of STOBER synchronous servo motors with CONTROL TECHNIQUES drive controllers depending on the encoder model.

Drive controller		Unidrive SP (EnDat 2.1; resolver)	Digitax HD (OCS) (EnDat 2.2)
Drive controller code		GE	HH
Connection plan ID		442555	443177
Encoder	**Encoder code**		
EnDat 2.2 EQI 1131 Safety	S2	–	EZ
EnDat 2.2 EQN 1135 Safety	S3	–	EZ
EnDat 2.1 EQN 1125	Q4	EZ	–
EnDat 2.1 ECI 1118-G3	C2	EZ	–
EnDat 2.1 EQI 1130-G3	Q2	EZ	–
Resolvers	R0	EZ	–

The encoder and drive controller codes are a part of the type designation of the motor.

18.3.3 Terminal assignment of the power plug connector

The size and connection diagram of the power plug connector depend on the size of the motor.

Plug connector size con.23

Connection diagram	Pin	Connection
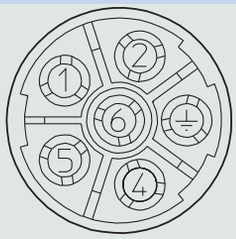	1	1U1 (U phase)
	2	1V1 (V phase)
	4	1W1 (W phase)
	5	1BD1 (brake +)
	6	1BD2 (brake –)
	⏚	PE (grounding conductor)

Plug connector size con.40

Connection diagram	Pin	Connection
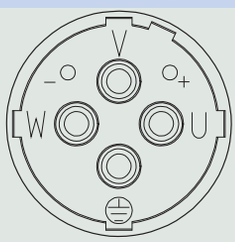	U	1U1 (U phase)
	V	1V1 (V phase)
	W	1W1 (W phase)
	+	1BD1 (brake +)
	–	1BD2 (brake –)
	⏚	PE (grounding conductor)

18.3.4 Terminal assignment of the encoder plug connector

The size and terminal assignment of the encoder plug connectors depend on the model of encoder installed and the size of the motor.

EnDat 2.1 encoder with sin/cos incremental signals, plug connector size con.23

Connection diagram	Pin	Connection
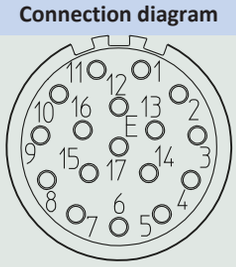	1	1TP1 (temperature sensor +)
	2	1TP2 (temperature sensor –)
	3	
	4	
	5	
	6	
	7	
	8	Clock +
	9	Clock –
	10	A + (Cos +)
	11	Data +
	12	Data –
	13	A – (Cos –)
	14	B + (Sin +)
	15	B – (Sin –)
	16	Up +
	17	0 V GND

Resolver, plug connector size con.23

Connection diagram	Pin	Connection
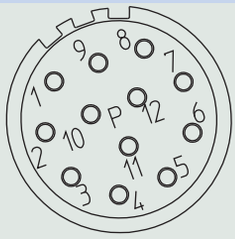	1	R2 Ref +
	2	R1 Ref −
	3	S3 Cos +
	4	S1 Cos −
	5	S4 Sin +
	6	S2 Sin −
	7	1TP1 (temperature sensor +)
	8	1TP2 (temperature sensor −)
	9	
	10	
	11	
	12	

18.3.5 Terminal assignment for plug connectors (One Cable Solution)

In the One Cable Solution design, the power and encoder lines are connected using a shared plug connector.

The temperature sensor of the motor is connected to the encoder internally. The measured values from the temperature sensor are transmitted via the log of the encoder.

Plug connector size con.23

Connection diagram	Pin	Connection
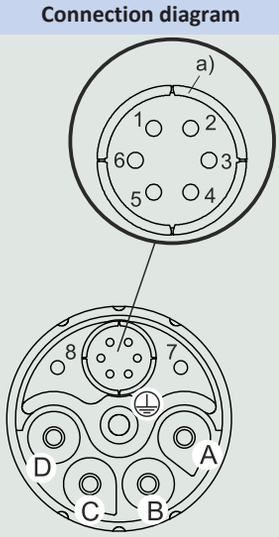	A	1U1 (U phase)
	B	1V1 (V phase)
	C	1W1 (W phase)
	D	
	1	Up +
	2	0 V GND
	3	Data +
	4	Data −
	5	Clock +
	6	Clock −
	7	1BD2 (brake −)
	8	1BD1 (brake +)
	⏚	PE (grounding conductor)

a) Coaxial shield to which the shield of the encoder cores is connected

18.4 Connection to Siemens drive controllers

This chapter contains the information for connecting STOBER synchronous servo motors to drive controllers of the above-named manufacturer which differs from connecting to STOBER drive controllers. You can find all other information about STOBER synchronous servo motors in the chapter [▶ 17].

STOBER has taken the following measures to minimize the effort of commissioning STOBER motors connected to SINAMICS S120 drive controllers and avoid errors during parameterization:

- The commutation offset of the motor was set so that calibration by the customer is not necessary.
- Parameter lists are provided on request.

More information on commissioning EZ motors connected to SINAMICS S120 drive controllers can be found in the 443232_en document in the download area on the STOBER website.

18.4.1 Encoders

Encoders with EnDat 2.1 interface

Encoder model	Code	Measuring method	Recordable revolutions	Resolution	Position values per revolution	Periods per revolution	MTTF [years]	PFH [h]
EnDat 2.1 EQN 1125	Q4	Optical	4096	13 bit	8192	Sin/cos 512	> 57	≤ 2×10^{-6}

Notes

- The encoder code is a part of the type designation of the motor.
- Multiple revolutions of the motor shaft can be recorded only using multi-turn encoders.

18.4.2 Resolver

In this chapter, you can find detailed technical data for the resolver that can be installed as an encoder in a STOBER synchronous servo motor.

Feature	Description
Code	R0
Number of poles	2
Input voltage U_{1eff}	7 V ± 5%
Input frequency f_1	10 kHz
Output voltage $U_{2,S1–S3}$	$K_{tr} \cdot U_{R1–R2} \cdot \cos \theta$
Output voltage $U_{2,S2–S4}$	$K_{tr} \cdot U_{R1–R2} \cdot \sin \theta$
Transformation ratio K_{tr}	0.5 ± 5%
Electrical fault	±10 arcmin
MTTF	> 100 years
PFH	≤ 10^{-9}

Tab. 2: Technical characteristics – Ambient conditions

18.4.3 Possible combinations with drive controllers

The following table shows the possible combinations of STOBER synchronous servo motors with drive controllers from Siemens depending on the encoder model.

Drive controller		**SINAMICS S120** (EnDat 2.1; resolver)
Drive controller code		FJ
Connection plan ID		442315
Encoder	**Encoder code**	
EnDat 2.1 EQN 1125	Q4	EZ
Resolvers	R0	EZ

The encoder and drive controller codes are a part of the type designation of the motor.

18.4.4 Connection assignment of the power plug connector

The size and connection diagram of the power plug connector depend on the size of the motor.

Plug connector size con.23

Connection diagram	**Pin**	**Connection**
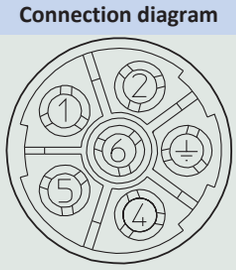	1	1U1 (U phase)
	2	1V1 (V phase)
	4	1BD1 (brake +)
	5	1BD2 (brake –)
	6	1W1 (W phase)
	⏚	PE (grounding conductor)

Plug connector size con.40

Connection diagram	**Pin**	**Connection**
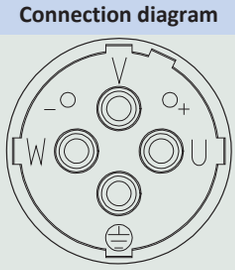	U	1U1 (U phase)
	V	1V1 (V phase)
	W	1W1 (W phase)
	+	1BD1 (brake +)
	–	1BD2 (brake –)
	⏚	PE (grounding conductor)

18.4.5 Connection assignment of the encoder plug connector

The size and terminal assignment of the encoder plug connectors depend on the model of encoder installed and the size of the motor.

EnDat 2.1 encoder with sin/cos incremental signals, plug connector size con.23

Connection diagram	Pin	Connection
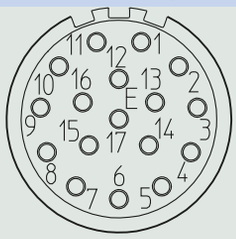	1	A + (Cos +)
	2	A – (Cos –)
	3	Data +
	4	
	5	Clock +
	6	
	7	0 V GND
	8	1TP1 (temperature sensor +)
	9	1TP2 (temperature sensor –)
	10	Up +
	11	B + (Sin +)
	12	B – (Sin –)
	13	Data –
	14	Clock –
	15	0 V sense
	16	Up sense
	17	

Resolver, plug connector size con.23

Connection diagram	Pin	Connection
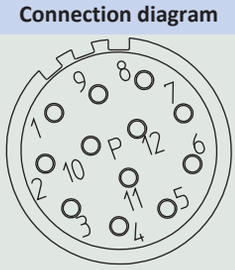	1	S4 Sin +
	2	S2 Sin –
	3	
	4	
	5	
	6	
	7	R1 Ref –
	8	1TP1 (temperature sensor +)
	9	1TP2 (temperature sensor –)
	10	R2 Ref +
	11	S3 Cos +
	12	S1 Cos –

18.5 Connection to Kollmorgen drive controllers

This chapter contains the information for connecting STOBER synchronous servo motors to drive controllers of the above-named manufacturer which differs from connecting to STOBER drive controllers. You can find all other information about STOBER synchronous servo motors in the chapter [▶ 17].

STOBER has taken the following measures to minimize the effort of commissioning STOBER motors connected to Kollmorgen drive controllers and avoid errors during parameterization:

- The commutation offset of the motor was set so that calibration by the customer is not necessary.
- Parameter lists are provided on request.

More information on commissioning EZ motors connected to Kollmorgen drive controllers can be found in the 443236_en document in the download area on the STOBER website.

18.5.1 Encoders

Encoders with EnDat 2.2 interface

Encoder model	Code	Measuring method	Recordable revolutions	Resolution	Position values per revolution	MTTF [years]	PFH [h]
EnDat 2.2 EQI 1131 Safety	S2	Inductive	4096	19 bit	524288	> 100	$\leq 15 \times 10^{-9}$

Encoders with EnDat 2.1 interface

Encoder model	Code	Measuring method	Recordable revolutions	Resolution	Position values per revolution	Periods per revolution	MTTF [years]	PFH [h]
EnDat 2.1 EQN 1125	Q4	Optical	4096	13 bit	8192	Sin/cos 512	> 57	$\leq 2 \times 10^{-6}$

Notes

- The encoder code is a part of the type designation of the motor.
- Safety = Safety-related position measuring system for use in safety-oriented applications.
- Multiple revolutions of the motor shaft can be recorded only using multi-turn encoders.

18.5.2 Resolver

In this chapter, you can find detailed technical data for the resolver that can be installed as an encoder in a STOBER synchronous servo motor.

Feature	Description
Code	R0
Number of poles	2
Input voltage U_{1eff}	7 V ± 5%
Input frequency f_1	10 kHz
Output voltage $U_{2,S1–S3}$	$K_{tr} \cdot U_{R1–R2} \cdot \cos \theta$
Output voltage $U_{2,S2–S4}$	$K_{tr} \cdot U_{R1–R2} \cdot \sin \theta$
Transformation ratio K_{tr}	0.5 ± 5%
Electrical fault	±10 arcmin
MTTF	> 100 years
PFH	$\leq 10^{-9}$

Tab. 3: Technical characteristics – Ambient conditions

18.5.3 Possible combinations with drive controllers

The following table shows the possible combinations of STOBER synchronous servo motors with drive controllers from Kollmorgen depending on the encoder model.

Drive controller		**Servostar S300/S400/S600/S700** (EnDat 2.2; EnDat 2.1; resolver)
Drive controller code		FE
Connection plan ID		442311
Encoder	**Encoder code**	
EnDat 2.2 EQI 1131 Safety	S2	EZ
EnDat 2.1 EQN 1125	Q4	EZ
Resolvers	R0	EZ

The encoder and drive controller codes are a part of the type designation of the motor.

18.5.4 Connection assignment of the power plug connector

The size and connection diagram of the power plug connector depend on the size of the motor.

Plug connector size con.23

Connection diagram	**Pin**	**Connection**
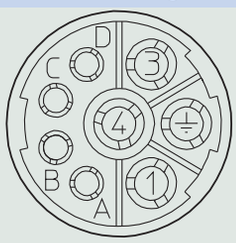	1	1U1 (U phase)
	3	1W1 (W phase)
	4	1V1 (V phase)
	A	1BD1 (brake +)
	B	1BD2 (brake –)
	C	
	D	
	⏚	PE (grounding conductor)

Plug connector size con.40

Connection diagram	**Pin**	**Connection**
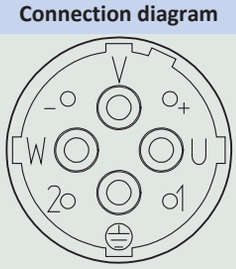	U	1U1 (U phase)
	V	1V1 (V phase)
	W	1W1 (W phase)
	+	1BD1 (brake +)
	–	1BD2 (brake –)
	1	
	2	
	⏚	PE (grounding conductor)

18.5.5 Connection assignment of the encoder plug connector

The size and terminal assignment of the encoder plug connectors depend on the model of encoder installed and the size of the motor.

EnDat 2.1 encoder with sin/cos incremental signals, plug connector size con.23

Connection diagram	Pin	Connection
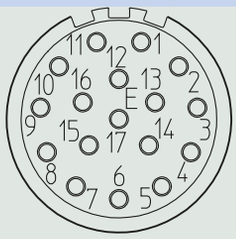	1	B – (Sin –)
	2	0 V GND
	3	A – (Cos –)
	4	Up +
	5	Data +
	6	
	7	1TP1 (temperature sensor +)
	8	Clock +
	9	B + (Sin +)
	10	0 V sense
	11	A + (Cos +)
	12	Up sense
	13	Data –
	14	1TP2 (temperature sensor -)
	15	Clock –
	16	
	17	

Resolver, plug connector size con.23

Connection diagram	Pin	Connection
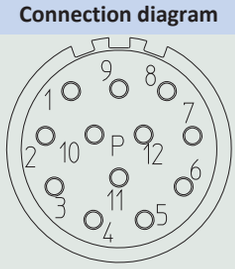	1	
	2	1TP1 (temperature sensor +)
	3	S4 Sin +
	4	S3 Cos +
	5	R2 Ref +
	6	1TP2 (temperature sensor -)
	7	S2 Sin –
	8	S1 Cos –
	9	R1 Ref –
	10	
	11	
	12	

18.6 Connection to Bosch Rexroth drive controllers

This chapter contains the information for connecting STOBER synchronous servo motors to drive controllers of the above-named manufacturer which differs from connecting to STOBER drive controllers. You can find all other information about STOBER synchronous servo motors in the chapter [▶ 17].

STOBER has taken the following measures to minimize the effort of commissioning STOBER motors connected to IndraDrive C/Cs drive controllers and avoid errors during parameterization:

- The commutation offset of the motor was set so that calibration by the customer is not necessary.
- Parameter lists are provided on request.

More information on commissioning EZ motors connected to IndraDrive C/Cs drive controllers can be found in the 443235_en document in the download area on the STOBER website.

18.6.1 Encoders

Encoders with EnDat 2.1 interface

Encoder model	Code	Measuring method	Recordable revolutions	Resolution	Position values per revolution	Periods per revolution	MTTF [years]	PFH [h]
EnDat 2.1 EQN 1125	Q4	Optical	4096	13 bit	8192	Sin/cos 512	> 57	$\leq 2 \times 10^{-6}$
EnDat 2.1 ECI 1118-G3	C2	Inductive	–	18 bit	262144	Sin/cos 16	> 100	$\leq 6 \times 10^{-7}$
EnDat 2.1 EQI 1130-G3	Q2	Inductive	4096	18 bit	262144	Sin/cos 16	> 100	$\leq 6 \times 10^{-7}$

Encoders with HIPERFACE interface

Encoder model	Code	Measuring method	Recordable revolutions	Resolution	Position values per revolution	Periods per revolution	MTTF [years]	PFH [h]
SKM36	H1	Optical	4096	12 bit	4096	Sin/cos 128	> 100	$\leq 5.4 \times 10^{-7}$

Notes

- The encoder code is a part of the type designation of the motor.
- Multiple revolutions of the motor shaft can be recorded only using multi-turn encoders.

18.6.2 Possible combinations with drive controllers

The following table shows the possible combinations of STOBER synchronous servo motors with drive controllers from Bosch Rexroth depending on the encoder model.

Drive controller		IndraDrive C/Cs (EnDat 2.1; HIPERFACE)
Drive controller code		FW
DC link voltage U_{ZK}		540 V
Connection plan ID		442445
Encoder	**Encoder code**	
EnDat 2.1 EQN 1125	Q4	EZ
EnDat 2.1 ECI 1118-G3	C2	EZ
EnDat 2.1 EQI 1130-G3	Q2	EZ
SKM36	H1	EZ

The encoder and drive controller codes are a part of the type designation of the motor.

18.6.3 Connection assignment of the power plug connector

The size and connection diagram of the power plug connector depend on the size of the motor.

Plug connector size con.23

Connection diagram	Pin	Connection
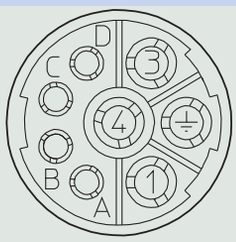	1	1U1 (U phase)
	3	1V1 (V phase)
	4	1W1 (W phase)
	A	1BD1 (brake +)
	B	1BD2 (brake −)
	C	1TP1 (temperature sensor +)
	D	1TP2 (temperature sensor −)
	⏚	PE (grounding conductor)

Plug connector size con.40

Connection diagram	Pin	Connection
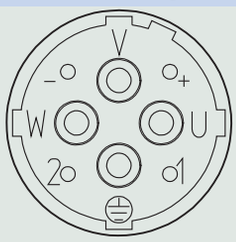	U	1U1 (U phase)
	V	1V1 (V phase)
	W	1W1 (W phase)
	+	1BD1 (brake +)
	−	1BD2 (brake −)
	1	1TP1 (temperature sensor +)
	2	1TP2 (temperature sensor −)
	⏚	PE (grounding conductor)

18.6.4 Connection assignment of the encoder plug connector

The size and terminal assignment of the encoder plug connectors depend on the model of encoder installed and the size of the motor.

EnDat 2.1 encoder with sin/cos incremental signals, plug connector size con.23

This terminal assignment only applies to the IndraDrive C/Cs drive controller.

Connection diagram	Pin	Connection
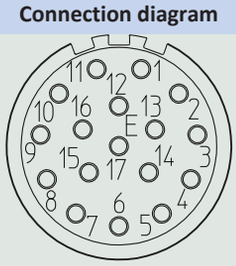	1	Up sense
	2	
	3	
	4	0 V sense
	5	
	6	
	7	Up +
	8	Clock +
	9	Clock –
	10	0 V GND
	11	
	12	B + (Sin +)
	13	B – (Sin –)
	14	Data +
	15	A + (Cos +)
	16	A – (Cos –)
	17	Data –

Hiperface encoder, plug connector size con.23

Connection diagram	Pin	Connection
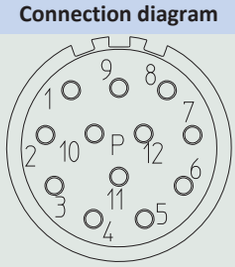	1	Us
	2	0 V GND
	3	REFSIN
	4	REFCOS
	5	Data +
	6	Data –
	7	+ SIN
	8	+ COS
	9	
	10	
	11	
	12	

18.7 Connection to Beckhoff drive controllers

This chapter contains the information for connecting STOBER synchronous servo motors to drive controllers of the above-named manufacturer which differs from connecting to STOBER drive controllers. You can find all other information about STOBER synchronous servo motors in the chapter [▶ 17].

STOBER has taken the following measures to minimize the effort of commissioning STOBER motors connected to AX5000 and AX8000 drive controllers and avoiding errors during parameterization:

- The commutation offset of the motor was set so that calibration by the customer is not necessary.
- Parameter files for all supported motor versions are provided.

More information on commissioning EZ motors connected to Beckhoff drive controllers can be found in the 443185_en document in the download area on the STOBER website.

18.7.1 Encoders

Encoders with EnDat 2.2 interface

Encoder model	Code	Measuring method	Recordable revolutions	Resolution	Position values per revolution	MTTF [years]	PFH [h]
EnDat 2.2 EQI 1131 Safety	S2	Inductive	4096	19 bit	524288	> 100	$\leq 15 \times 10^{-9}$
EnDat 2.2 EQN 1135 Safety	S3	Optical	4096	23 bit	8388608	> 100	$\leq 15 \times 10^{-9}$

Encoders with EnDat 2.1 interface

Encoder model	Code	Measuring method	Recordable revolutions	Resolution	Position values per revolution	Periods per revolution	MTTF [years]	PFH [h]
EnDat 2.1 EQN 1125	Q4	Optical	4096	13 bit	8192	Sin/cos 512	> 57	$\leq 2 \times 10^{-6}$
EnDat 2.1 EQI 1130-G3	Q2	Inductive	4096	18 bit	262144	Sin/cos 16	> 100	$\leq 6 \times 10^{-7}$

Encoders with HIPERFACE interface

Encoder model	Code	Measuring method	Recordable revolutions	Resolution	Position values per revolution	MTTF [years]	PFH [h]
EDM35	H6	Optical	4096	20 bit	1048576	> 100	$\leq 31 \times 10^{-9}$

Notes

- The encoder code is a part of the type designation of the motor.
- Safety = Safety-related position measuring system for use in safety-oriented applications.
- Multiple revolutions of the motor shaft can be recorded only using multi-turn encoders.

18.7.2 Possible combinations with drive controllers

The following table shows the possible combinations of STOBER synchronous servo motors with drive controllers from Beckhoff depending on the encoder model.

Drive controller		**AX5000** (EnDat 2.1)	**AX5000 (OCS)** (HIPERFACE DSL)	**AX8000 (OCS)** (HIPERFACE DSL)	**AX5000** (EnDat 2.1)	**AX8000** (EnDat 2.2)
Number of pins of the power plug connector		8-pin	9-pin	9-pin	9-pin	9-pin
Drive controller code		FM	HK	HK	HN	HO
Connection plan ID		442318	443393	443393	443451	443452
Encoder	**Encoder code**					
EnDat 2.2 EQI 1131 Safety	S2					EZ
EnDat 2.2 EQN 1135 Safety	S3					EZ
EnDat 2.1 EQN 1125	Q4	EZ			EZ	
EnDat 2.1 EQI 1130-G3	Q2				EZ	
EDM35	H6		EZ	EZ		

The encoder and drive controller codes are a part of the type designation of the motor.

18.7.3 Terminal assignment of 8-pin power plug connector

The size and connection diagram of the power plug connector depend on the size of the motor.

Plug connector size con.23

Connection diagram	**Pin**	**Connection**
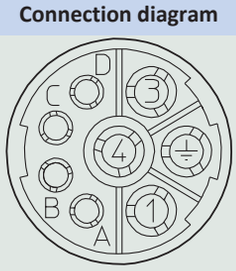	1	1U1 (U phase)
	3	1W1 (W phase)
	4	1V1 (V phase)
	A	1BD1 (brake +)
	B	1BD2 (brake −)
	C	1TP1 (temperature sensor +)
	D	1TP2 (temperature sensor −)
	⏚	PE (grounding conductor)

Plug connector size con.40

Connection diagram	**Pin**	**Connection**
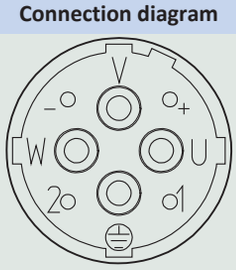	U	1U1 (U phase)
	V	1V1 (V phase)
	W	1W1 (W phase)
	+	1BD1 (brake +)
	−	1BD2 (brake −)
	1	1TP1 (temperature sensor +)
	2	1TP2 (temperature sensor −)
	⏚	PE (grounding conductor)

18.7.4 Terminal assignment of 9-pin power plug connector

The size and connection diagram of the power plug connector depend on the size of the motor.

Plug connector size con.23

Connection diagram	Pin	Connection
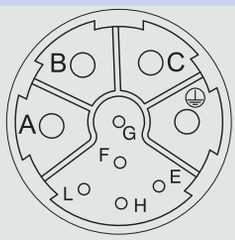	A	1U1 (U phase)
	B	1V1 (V phase)
	C	1W1 (W phase)
	E	1TP2 (temperature sensor -)
	F	
	G	1BD1 (brake +)
	H	1TP1 (temperature sensor +)
	L	1BD2 (brake –)
	⏚	PE (grounding conductor)

18.7.5 Connection assignment of the encoder plug connector

The size and terminal assignment of the encoder plug connectors depend on the type of encoder installed and the size of the motor.

EnDat 2.2 digital encoder, plug connector size con.23

Connection diagram	Pin	Connection
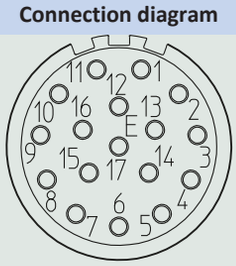	1	
	2	0 V GND
	3	
	4	Up +
	5	Data +
	6	
	7	
	8	Clock +
	9	
	10	0 V sense
	11	
	12	Up sense
	13	Data –
	14	
	15	Clock –
	16	
	17	

EnDat 2.1 encoder with sin/cos incremental signals, plug connector size con.23

Connection diagram	Pin	Connection
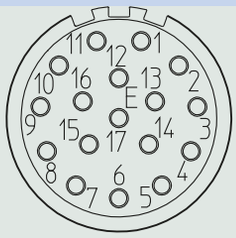	1	B – (Sin –)
	2	0 V GND
	3	A – (Cos –)
	4	Up +
	5	Data +
	6	
	7	
	8	Clock +
	9	B + (Sin +)
	10	0 V sense
	11	A + (Cos +)
	12	Up sense
	13	Data –
	14	
	15	Clock –
	16	
	17	

18.7.6 Terminal assignment for plug connectors (One Cable Solution)

In the One Cable Solution design, the power and encoder lines are connected using a shared plug connector.

The size of the plug connector depends on the size of the motor.

The temperature sensor of the motor is connected to the encoder internally. The measured values from the temperature sensor are transmitted via the log of the encoder.

Plug connector size con.23

Connection diagram	Pin	Connection
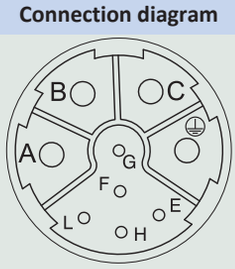	A	1U1 (U phase)
	B	1V1 (V phase)
	C	1W1 (W phase)
	E	DSL– (L)
	F	DSL shield
	G	1BD1
	H	DSL+ (H)
	L	1BD2
	⏚	PE (grounding conductor)

18.8 Connection to Allen-Bradley drive controllers

This chapter contains the information for connecting STOBER synchronous servo motors to drive controllers of the above-named manufacturer which differs from connecting to STOBER drive controllers. You can find all other information about STOBER synchronous servo motors in the chapter [▶ 17].

The STOBER EZ geared motors can be parameterized to Kinetix 5500/5700/6500 drive controllers fully automatically. EZ motors without an attached gearbox and other STOBER series are excluded.

STOBER has taken the following measures to minimize the effort of commissioning STOBER motors connected to Allen-Bradley drive controllers and avoid errors during parameterization:

- The commutation offset of the motor was set so that calibration by the customer is not necessary.
- The electronic nameplate of the motor was designed to be compatible with the Kinetix 5500/5700/6500.
- STOBER tests the motor connected to Allen-Bradley drive controllers before delivery to the customer.
- Configuration files for supported motor versions are available for download.

More information on commissioning EZ motors connected to Allen-Bradley drive controllers can be found in the 443244_en document in the download area on the STOBER website.

18.8.1 Encoders

Encoders with EnDat 2.2 interface

Encoder model	Code	Measuring method	Recordable revolutions	Resolution	Position values per revolution	MTTF [years]	PFH [h]
EnDat 2.2 EQN 1135 Safety	S3	Optical	4096	23 bit	8388608	> 100	$\leq 15 \times 10^{-9}$

Encoders with HIPERFACE interface

Encoder model	Code	Measuring method	Recordable revolutions	Resolution	Position values per revolution	MTTF [years]	PFH [h]
EDM35	H6	Optical	4096	20 bit	1048576	> 100	$\leq 31 \times 10^{-9}$

Notes

- The encoder code is a part of the type designation of the motor.
- Safety = Safety-related position measuring system for use in safety-oriented applications.
- Multiple revolutions of the motor shaft can be recorded only using multi-turn encoders.

18.8.2 Possible combinations with drive controllers

The following table shows the possible combinations of STOBER motors and geared motors with drive controllers from Allen-Bradley depending on the encoder model.

Drive controller		KINETIX 5500 (OCS) (HIPERFACE DSL)	KINETIX 5700 (OCS) (HIPERFACE DSL)	KINETIX 5700 (EnDat 2.2)	KINETIX 6500 (EnDat 2.2)
Drive controller code		HB	GD	HA	GC
Connection plan ID		443169	442449	443096	442448
Encoder	**Encoder code**				
EnDat 2.2 EQN 1135 Safety	S3	–	–	EZ	EZ
EDM35	H6	EZ	EZ	–	–

The encoder and drive controller codes are a part of the type designation of the motor.

18.8.3 Terminal assignment of the power plug connector

The size and connection diagram of the power plug connector depend on the size of the motor.

Plug connector size con.23

Connection diagram	Pin	Connection
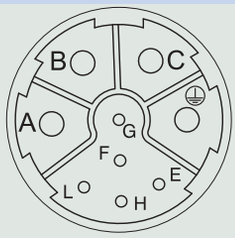	A	1U1 (U phase)
	B	1V1 (V phase)
	C	1W1 (W phase)
	F	MBRK + (1BD1)
	G	MBRK – (1BD2)
	E	
	H	
	L	
	⏚	PE (grounding conductor)

Plug connector size con.40

Connection diagram	Pin	Connection
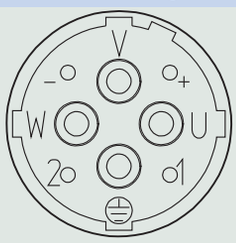	U	1U1 (U phase)
	V	1V1 (V phase)
	W	1W1 (W phase)
	+	MBRK + (1BD1)
	–	MBRK – (1BD2)
	1	
	2	
	⏚	PE (grounding conductor)

18.8.4 Terminal assignment of the encoder plug connector

The size and terminal assignment of the encoder plug connectors depend on the model of encoder installed and the size of the motor.

EnDat 2.2 digital encoder, plug connector size con.23

Connection diagram	Pin	Connection
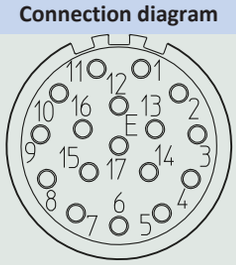	1	
	2	
	3	
	4	
	5	DATA +
	6	DATA –
	7	CLK + (Clock +)
	8	CLK – (Clock –)
	9	EPWR_5V (Up +)
	10	ECOM (0 V)
	11	
	12	
	13	TS + (1TP1)
	14	TS – (1TP2)
	15	
	16	
	17	

18.8.5 Terminal assignment for plug connectors (One Cable Solution)

In the One Cable Solution design, the power and encoder lines are connected using a shared plug connector.

The size of the plug connector depends on the size of the motor.

The temperature sensor of the motor is connected to the encoder internally. The measured values from the temperature sensor are transmitted via the log of the encoder.

Plug connector size con.23

Connection diagram	Pin	Connection
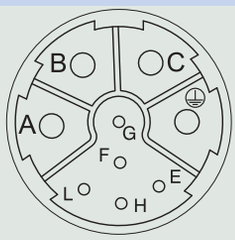	A	1U1 (U phase)
	B	1V1 (V phase)
	C	1W1 (W phase)
	E	DATA + (DSL +)
	F	MBRK + (1BD1)
	G	MBRK – (1BD2)
	H	DATA – (DSL –)
	L	
	⏚	PE (grounding conductor)

Plug connector size con.40

Connection diagram	Pin	Connection
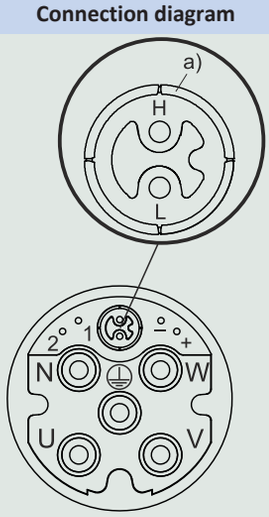	U	1U1 (U phase)
	V	1V1 (V phase)
	W	1W1 (W phase)
	N	
	+	
	–	
	1	MBRK + (1BD1)
	2	MBRK – (1BD2)
	H	DATA – (DSL –)
	L	DATA + (DSL +)
	⏚	PE (grounding conductor)

a) Coaxial shield to which the DSL shield is connected



19

Close to customers around the world

Service Network

You can rely on our strong partners when it comes to service. They guide you through commissioning and offer expert technical advice.

International Service Network

Thanks to our large and long-standing international network, we offer worldwide service and continuous support. In over 40 countries. Put your trust in our expertise.

Service hotline

+49 7231 582-3000 We are available around the clock.

Do you value international availability and global service? We are here for you.

STOBER AUSTRIA
www.stoeber.at
+43 7613 7600-0
sales@stoeber.at

STOBER CHINA
www.stoeber.cn
+86 512 5320 8850
sales@stoeber.cn

STOBER FRANCE
www.stober.fr
+33 478 98 91 80
sales@stober.fr

STOBER Germany
www.stoeber.de
+49 7231 582-0
sales@stoeber.de

STOBER ITALY
www.stober.it
+39 02 93909570
sales@stober.it

STOBER JAPAN
www.stober.co.jp
+81-3-5875-7583
sales@stober.co.jp

STOBER KOREA
www.stober.kr
+82 10 5681 6298
sales@stober.kr

STOBER SWEDEN
www.stober.com
+46 702 394 675
neil.arstad@stoeber.de

STOBER SWITZERLAND
www.stoeber.ch
+41 56 496 96 50
sales@stoeber.ch

STOBER TAIWAN
www.stober.tw
+886 4 2358 6089
sales@stober.tw

STOBER TURKEY
www.stober.com
+90 216 510 2290
sales-turkey@stober.com

STOBER UK
www.stober.co.uk
+44 1543 458 858
sales@stober.co.uk

STOBER USA
www.stober.com
+1 606 759 5090
sales@stober.com

20 Appendix

Table of contents

20.1 Symbols in formulas 634

20.2 Trademarks 639

20.3 Sales terms and delivery conditions 639

20.4 Publication details 639

20.1 Symbols in formulas

The formula symbols for values actually present in the application are marked with *.

Symbol	Unit	Explanation
a_{th}	–	Parameter for calculating $K_{mot,th}$
a_{thEL}	–	Parameters for calculating $K_{mot,th}$ (dependent on the mounting position)
B_{10}	–	Number of cycles after which 10% of components have failed
B_{10D}	–	Number of cycles until 10% of components have failed dangerously
C_2	Nm/ arcmin	Torsional stiffness relative to the gearbox output
C_{2k}	Nm/arcmin	Tilting stiffness
C_{dyn}	N	Dynamic bearing load rating
ΔJ_B	$kgcm^2$	Additive mass moment of inertia of a motor with brake
Δm_B	kg	Additive weight of a motor with brake
Δn_1	rpm	Speed difference at the input
Δn_2	rpm	Speed difference at the output
$\Delta\phi_2$	arcmin	Backlash at the output shaft with a blocked input
$\Delta\phi_{2red}$	arcmin	Reduced backlash at the output shaft with a blocked input
$\Delta\phi_{2redI}$	arcmin	Reduced backlash (backlash class I) at the output shaft with a blocked input
$\Delta\phi_{2redII}$	arcmin	Reduced backlash (backlash class II) at the output shaft with a blocked input
Δt	s	Timespan
$\Delta\vartheta$	K	Temperature difference
η_{get}	%	Efficiency of the gearbox at nominal torque
η_{gt}	%	Efficiency of the screw drive
ED_{10}	%	Duty cycle based on 10 minutes
F_{2ax*}	N	Actual axial force at the gearbox output
F_{2ax100}	N	Permitted axial force at the gearbox output for $n_{2m*} \leq 100$ rpm (without radial force)
F_{2ax20}	N	Permitted axial force at the gearbox output for $n_{2m*} \leq 20$ rpm (without radial force)
$F_{2ax,eq*}$	N	Actual equivalent axial force on the gearbox output
F_{2axN}	N	Permitted nominal axial force at the gearbox output (without radial force)
f_{2PU}	Hz	Output frequency of the power unit
$f_{PWM,PU}$	Hz	Frequency of the pulse width modulation of the power unit
F_{2rad*}	N	Actual radial force on the gearbox output
$F_{2rad100}$	N	Permitted radial force at the gearbox output for $n_{2m*} \leq 100$ rpm
F_{2rad20}	N	Permitted radial force on the gearbox output for $n_{2m*} \leq 20$ rpm
$F_{2rad,acc}$	N	Permitted radial acceleration force at the gearbox output
$F_{2rad,acc*}$	N	Radial acceleration force present at the gearbox output
$F_{2rad,acc,1*}$	N	Radial acceleration force present at the gearbox output in the first time period
$F_{2rad,acc,n*}$	N	Radial acceleration force present at the gearbox output in the nth time period
$F_{2rad,eq*}$	N	Actual equivalent force at the gearbox output
F_{2radN}	N	Permitted nominal radial force at the gearbox output
F_{ax}	N	Permitted axial force on the output
F_{ax*}	N	Actual axial force on the output
F_{ax0}	N	Permitted axial force when the motor is at a standstill for holding the load using the motor torque
$F_{ax0,abs}$	N	Permitted axial force when the motor is at an absolute standstill (n_{mot}=0) for holding the load using motor torque
$F_{ax,1*} - F_{ax,n*}$	N	Actual axial force in the respective time segment
$F_{ax,1*} - F_{ax,n*}$	N	Actual axial force in the respective time segment
F_{ax100}	N	Permitted axial force on the output for $n_{m*} \leq 100$ rpm
F_{ax300}	N	Permitted axial force on the output for $n_{m*} \leq 300$ rpm
$F_{ax,eff*}$	N	Actual effective axial force on the output
$F_{ax,ss}$	N	Axial force that can be transmitted by the shrink ring
fB_{op}	–	Operating mode operating factor

Symbol	Unit	Explanation
fB_t	–	Runtime operating factor
fB_T	–	Temperature operating factor
fB_{ZB}	–	Operating factor for cyclic operation
F_{rad}	N	Permitted radial force on the output
F_{rad*}	N	Actual radial force on the output
F_{rad100}	N	Permitted radial force on the output for $n_{m*} \leq 100$ rpm
F_{rad300}	N	Permitted radial force on the output for $n_{m*} \leq 300$ rpm
$F_{rad,eq*}$	N	Actual equivalent radial force at the output
H	m	Installation altitude above sea level
i	–	Gear ratio
i_{exact}	–	Mathematically exact gear ratio
I	A	Current
I_0	A	Stall current
I_{max}	A	Maximum current
I_N	A	Nominal current
$I_{N,B}$	A	Nominal current of the brake at 20 °C
$I_{N,F}$	A	Nominal current of the forced ventilation unit
J_1	kgcm²	Mass moment of inertia relative to the gearbox input
J_{Bstop}	kgcm²	Reference mass moment of inertia when braking from full speed: $J_{Bstop} = J_{dyn} \times 2$
J_{dyn}	kgcm²	Mass moment of inertia of a motor in dynamic operation
J_{tot}	kgm²	Total mass moment of inertia (based on the motor shaft)
K_{EM}	V/1000 rpm	Voltage constant: peak value of the induced voltage between the phases U, V, W of the motor at operating temperature at a speed of 1000 rpm
K_H	–	Derating factor for installation altitude
K_{M0}	Nm/A	Torque constant: ratio of the stall torque and frictional torque to the stall current; $K_{M0} = (M_0 + M_R) / I_0$ (tolerance ±10%)
$K_{M,N}$	Nm/A	Torque constant: ratio of the nominal torque M_N to the nominal current I_N; $K_{M,N} = M_N / I_N$ (tolerance ±10%)
$K_{mot,th}$	–	Factor for determining the thermal limit torque
K_ϑ	–	Derating factor for surrounding temperature
l	mm	Length of the output shaft
L_{10}	–	Nominal bearing service life for a survival probability of 90% in 10^6 rollovers
L_{10h}	h	Bearing service life
$L_{pA,F}$	dBA	Noise level of the forced ventilation unit in the optimal operating range
L_{U-V}	mH	Winding inductance of a motor between two phases (determined in a resonant circuit)
LW	-	Load change: A load change (LW) corresponds to an acceleration and a deceleration.
m	kg	Weight (for gearboxes without lubricant)
M	Nm	Torque
|M|	Nm	Absolute value of torque
M_0	Nm	Stall torque: The continuous torque the motor is able to deliver at a speed of 10 rpm (tolerance ±5%)
$M_{1*} – M_{4*}$	Nm	Actual torque of the motor in the respective time segment (1 to 4)
M_{1acc*}	Nm	Actual acceleration torque at the gearbox input
M_{1eff*}	Nm	Actual effective torque at the gearbox input
$\|M_2\|$	Nm	Absolute value of torque on the output
$M_{2.0}$	Nm	Stall torque on the gearbox output
$M_{2.1*} – M_{2.4*}$	Nm	Actual torque in the respective time segment (1 to 4)
$M_{2,n*}$	Nm	Actual torque in the n-th time segment
M_{2acc}	Nm	Maximum permitted acceleration torque on the gearbox output
M_{2acc*}	Nm	Actual acceleration torque on the gearbox output
$M_{2acc,max}$	Nm	Maximum permitted acceleration torque of a group of geared motors whose size and nominal torque n_{1N} are the same
M_{2accHT}	Nm	Maximum permitted acceleration torque on the gearbox output with reduced backlash
M_{2eff*}	Nm	Actual effective torque on the gearbox output

Symbol	Unit	Explanation
M_{2eq*}	Nm	Equivalent torque present on the gearbox output
M_{2k*}	Nm	Actual tilting torque on the gearbox output
M_{2k100}	Nm	Permitted tilting torque on the gearbox output for $n_{2m*} \leq 100$ rpm
M_{2k20}	Nm	Permitted tilting torque on the gearbox output for $n_{2m*} \leq 20$ rpm
$M_{2k,acc}$	Nm	Permitted acceleration tilting torque at the gearbox output
$M_{2k,acc*}$	Nm	Acceleration tilting torque present at the gearbox output
$M_{2k,eq*}$	Nm	Actual equivalent tilting torque on the gearbox output
M_{2kN}	Nm	Permitted nominal tilting torque at the gearbox output
M_{2max}	Nm	Maximum torque at the gearbox output
M_{2N}	Nm	Nominal torque on the gearbox output (relative to n_{1N})
M_{2NOT}	Nm	Gearbox emergency off torque on the gearbox output for max. 1000 load changes
		Without consideration of the maximum torque of the motor
M_{2NOT*}	Nm	Actual emergency off torque for the gearbox on the gearbox output
M_{2th}	Nm	Thermal limit torque on the gearbox output
M_{Bdyn}	Nm	Dynamic braking torque at 100 °C
M_{Bstat}	Nm	Static braking torque of the motor brake at 100 °C
m_{dyn}	kg	Weight of a motor in dynamic operation
M_{eff*}	Nm	Actual effective torque of the motor
m_F	kg	Weight of the forced ventilation unit
M_k	Nm	Permitted tilting torque on the output
M_{k*}	Nm	Actual tilting torque on the output
$M_{k,1*} - M_{k,n*}$	Nm	Actual tilting torque of the motor in the respective time segment
$M_{k,eq*}$	Nm	Actual equivalent tilting torque at the output
M_{k100}	Nm	Permitted tilting torque on the output for $n_{m*} \leq 100$ rpm
M_{k300}	Nm	Permitted tilting torque on the output for $n_{m*} \leq 300$ rpm
M_L	Nm	Load torque
M_{L*}	Nm	Actual load torque
M_{lim}	Nm	Torque limit without field weakening
M_{limF}	Nm	Torque curve of the motor with forced ventilation in continuous operation
M_{limFW}	Nm	Torque limit with field weakening (applies to operation on STOBER drive controllers only)
M_{limK}	Nm	Torque curve of the motor with convection cooling in continuous operation
M_{max}	Nm	Maximum torque: the maximum permitted torque the motor is able to deliver over a short period (when accelerating or decelerating) (tolerance ±10%)
M_{max*}	Nm	Actual maximum torque
M_{n*}	Nm	Actual torque of the motor in the n-th time segment
M_N	Nm	Nominal torque: the maximum torque of a motor in S1 mode at nominal speed n_N (tolerance ±5%)
		You can calculate other torque values as follows: $M_{N*} = K_{M0} \cdot I* - M_R$.
M_{Nred}	Nm	Reduced nominal torque of the motor
M_{op}	Nm	Torque of motor at the operating point from the motor characteristic curve at n_{1m*}
M_R	Nm	Frictional torque (of the bearings and seals) of a motor at winding temperature $\Delta\vartheta = 100$ K
n	rpm	Speed
|n|	rpm	Absolute value of speed
n_{1limF}	rpm	Intersection of torque curve M_{lim} and torque curve with forced ventilation M_{limF}
n_{1limK}	rpm	Intersection of torque curve M_{lim} and torque curve with convection cooling M_{limK}
n_{1m*}	rpm	Actual average input speed
n_{1max}	rpm	Maximum permitted input speed
n_{1max*}	rpm	Actual maximum input speed
n_{1maxDB}	min^{-1}	Maximum permitted input speed of the gearbox in continuous operation
		(at surrounding temperature of 20 °C)
$n_{1maxDBEL1,2}$	rpm	Maximum permitted input speed of the gearbox in continuous operation Mounting positions EL1, EL2

Symbol	Unit	Explanation
		(at surrounding temperature of 20 °C)
$n_{1maxDBEL1,2,3,4}$	rpm	Maximum permitted input speed of the gearbox in continuous operation Mounting positions EL1, EL2, EL3, EL4
		(at surrounding temperature of 20 °C)
$n_{1maxDBEL1,2,5,6}$	rpm	Maximum permitted input speed of the gearbox in continuous operation Mounting positions EL1, EL2, EL5, EL6
		(at surrounding temperature of 20 °C)
$n_{1maxDBEL3,4}$	rpm	Maximum permitted input speed of the gearbox in continuous operation Mounting positions EL3, EL4
		(at surrounding temperature of 20 °C)
$n_{1maxDBEL3,4,5,6}$	rpm	Maximum permitted input speed of the gearbox in continuous operation Mounting positions EL3, EL4, EL5, EL6
		(at surrounding temperature of 20 °C)
$n_{1maxDBEL5,6}$	rpm	Maximum permitted input speed of the gearbox in continuous operation Mounting positions EL5, EL6
		(at surrounding temperature of 20 °C)
n_{1maxZB}	min^{-1}	Maximum permitted input speed of the gearbox in cyclic operation
		(at surrounding temperature of 20 °C)
n_{1N}	rpm	Nominal speed at the gearbox input
n_2	rpm	Speed at the gearbox output
$\lvert n_2 \rvert$	rpm	Absolute value of output speed
n_{2m*}	rpm	Actual average output speed
$n_{2m,1*} – n_{2m,4*}$	rpm	Actual average output speed in the respective time segment (1 to 4)
$n_{2m,n*}$	rpm	Actual average output speed in the n-th time segment
n_{2N}	min^{-1}	Nominal speed at the gearbox output
N_{Bstop}	–	Permitted number of braking processes from full speed (n = 3000 rpm) with J_{Bstop} (M_L = 0). The following applies if the values of n and J_{Bstop} differ: N_{Bstop} = $W_{B,Rlim}$ / $W_{B,R/B}$.
n_{m*}	rpm	Actual average motor speed
$n_{m,1*} – n_{m,4*}$	rpm	Actual average speed of the motor in the respective time segment (1 to 4)
$n_{m,n*}$	rpm	Actual average speed of the motor in the n-th time segment
n_{mot}	rpm	Speed of the motor
n_N	rpm	Nominal speed: The speed for which the nominal torque M_N is specified
p	–	Number of pole pairs
P_N	kW	Nominal power: the power the motor is able to deliver long term in S1 mode at the nominal point (tolerance ±5 %)
$P_{N,F}$	W	Nominal output of the forced ventilation unit
P_{st}	mm	Pitch of the screw drive
R_{U-V}	Ω	Winding resistance of a motor between two phases at a winding temperature of 20 °C
q_{vF}	m^3/h	Delivery capacity of the forced ventilation unit in open air
S	–	Service factor: Quotient of the nominal torque from the gearbox and the motor without consideration for thermal limiting performance. Represents a value for the reserve of the geared motor.
t	s	Time
$t_{1*} – t_{4*}$	s	Duration of the respective time segment (1 to 4)
t_{1B}	ms	Linking time: time from when the current is turned off until the nominal braking torque is reached
t_{11B}	ms	Response delay: time from when the current is turned off until the torque increases
t_{2B}	ms	Release time (also: disengagement time) of the brake; time span from when the current is switched off until the brake is completely released
t_{dec}	ms	Stop time
T_{el}	ms	Electrical time constant: ratio of the winding inductance to the winding resistance of a motor: T_{el} = L_{U-V} / R_{U-V}
t_{n*}	s	Duration of the n-th time segment
ϑ_{amb}	°C	Surrounding temperature
U	V	Voltage

Symbol	Unit	Explanation
$U_{N,B}$	V	Nominal voltage of brake
$U_{N,F}$	V	Nominal voltage of the forced ventilation unit
U_{ZK}	V	DC link voltage: characteristic value of a drive controller
v_{ax}	mm/s	Axial velocity
$v_{ax,m*}$	mm/s	Actual average axial velocity
$v_{ax,m1*} - v_{ax,mn*}$	mm/s	Actual average axial velocity in the respective time segment
$W_{B,R/B}$	J	Work done by friction for braking
$W_{B,Rlim}$	J	Work done by friction until wear limit is reached
$W_{B,Rmax/h}$	J/h	Maximum permitted work done by friction per hour with individual braking
x_2	mm	Distance of the shaft shoulder to the force application point
$x_{B,N}$	mm	Nominal air gap of brake
y_2	mm	Distance of the shaft axis to the axial force application point
z_2	mm	Distance of the shaft shoulder to the middle of the output bearing

20.2 Trademarks

The following names used in connection with the device, its optional equipment and its accessories are trademarks or registered trademarks of other companies:

ACOPOS®	ACOPOS® is a registered trademark of ABB Asea Brown Boveri Ltd., Switzerland.
Control Techniques®	Control Techniques® is a registered trademark of Nidec Control Techniques Limited, UK.
DRIVE-CLiQ®,	DRIVE-CLiQ® is a registered trademark of Siemens AG, Germany.
EnDat®	EnDat® and the EnDat® logo are registered trademarks of Dr. Johannes Heidenhain GmbH, Germany.
HIPERFACE®	HIPERFACE® and the HIPERFACE DSL® logo are registered trademarks of SICK AG, Germany.
IndraDrive®	IndraDrive® is a registered trademark of Bosch Rexroth AG, Germany.
INTERCONTEC®	INTERCONTEC® is a registered trademark of TE Connectivity Industrial GmbH, Germany.
RINGFEDER®	RINGFEDER® is a registered trademark of VBG GROUP TRUCK EQUIPMENT GmbH, Germany.
SERVOSTAR®	SERVOSTAR® is a registered trademark of Kollmorgen Corporation, USA.
SINAMICS®	SINAMICS® is a registered trademark of Siemens AG, Germany.

All other trademarks not listed here are the property of their respective owners.

Products that are registered as trademarks are not specially indicated in this documentation. Existing property rights (patents, trademarks, protection of utility models) are to be observed.

20.3 Sales terms and delivery conditions

You can find our current sales terms and delivery conditions at http://www.stoeber.de/en/gtc.

20.4 Publication details

Synchronous servo geared motors catalog ID 442437_en.

You can find right drive controllers in our Drives and Automation catalog, ID 442711_en.

You can find current versions of PDF files online at http://www.stoeber.de/en/downloads/.



ID 442437_en.15 05/2025

We reserve the right to make technical changes.

STÖBER Antriebstechnik GmbH + Co. KG
Kieselbronner Strasse 12
75177 Pforzheim
Germany
Phone: +49 7231 582-0
mail@stoeber.de
www.stober.com

Service hotline:
+49 7231 582-3000

STÖBER