IE3

Asynchronous geared motors

STÖBER

Asynchronous geared motors

STOBER drive technology for perfectionists

Sooner or later, design engineers never satisfied with the second-best solution end up at STOBER. That is because they can find everything here, with the broadest range of all imaginable drive technology components. Available with the highest level of design granularity to satisfy any individualized requirements perfectly. And the result is a complete STOBER system, from the gear rack and geared motor to open-loop or closed-loop control to intuitive project configuration software. With open interfaces based on established industry standards and reliably functioning communication between the individual components. The STOBER system also includes a complete package of services and practical support. Find out more on the following pages.

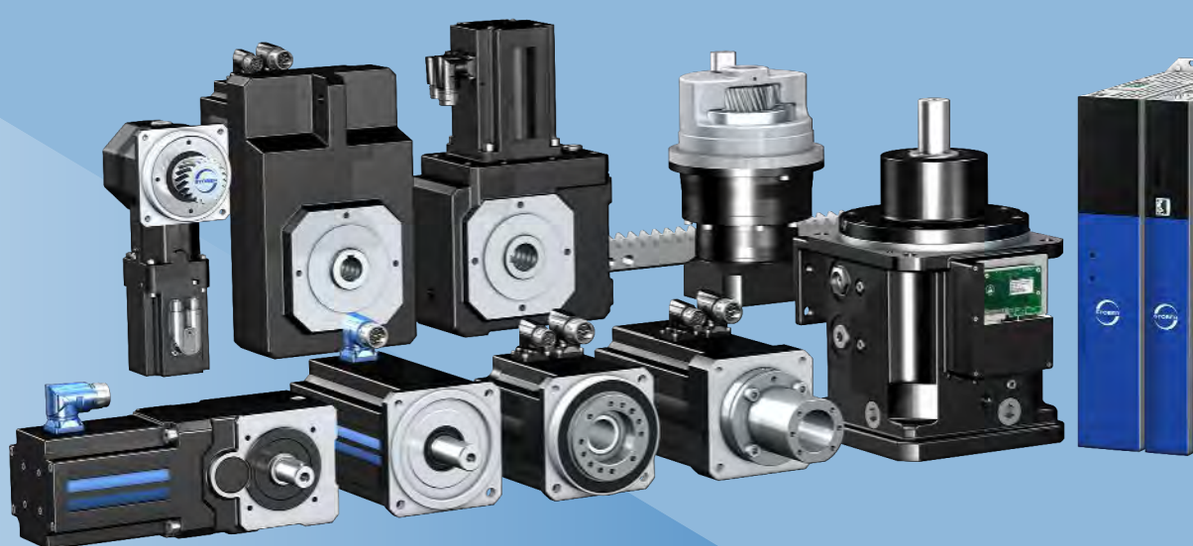

You can put your trust in STOBER

STOBER has been building excellent drive technology for more than 80 years. As a medium-sized, owner-operated company, STOBER understands the needs of its customers. Our company is down-to-earth, innovative, dynamic and focused on the customer. Our customers can find certified experts in every area, whether in research and development, production, technical consultation or design support. This goes beyond the technical qualifications. It also includes an equal measure of dedication, dependability and friendly, clear communication.

STÖBER

STÖBER
STÖBER

STOBER in motion

Despite our sense of tradition, we always enjoy something new. We continue to push ourselves forward and to refine our products further. We do this by implementing suggestions from real-world use, giving due consideration to customer requests and constantly seeking out even better solutions. This is all made possible by the competitive spirit with which we face every exciting challenge. The strong STOBER team spirit provides for productive collaboration. Both at work and outside the company doors. Our customers benefit from the extraordinary constancy of our employee base. This provides the astounding result where we can provide contacts familiar with a customer's industry and who can identify with a customer's needs.

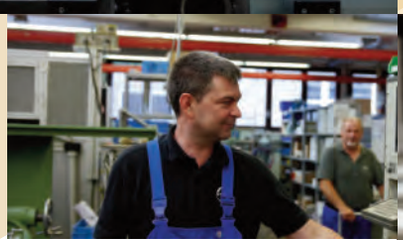

STÖBER
53

STÖBER
ANTRIEBSTECHNIK

The team that works well together wins

STOBER supplies the complete system: controller, automation, geared motors

STOBER has its roots in developing and building geared motors. We have also been developing and manufacturing drive controllers for decades. These STOBER components form drive systems with dependable functionality thanks to their plug-and-play design. Electronics and mechanical systems that speak the same language are critical for this. They understand each other without any adapters. All of the system components can recognize each other by their "electronic nameplate."

Systematic quality assurance

We check every single component and how it works together with others. Mass-producers are not able to do that. We assume responsibility for the complete system. This means certified operational reliability and the highest machine availability are guaranteed.

Technical system advantages

The STOBER system is flexible. One example is the freedom to choose between drive-based mode and controller-based mode. Or the feature allowing you to combine drive controllers in a multi-axis drive system and stand-alone controllers with special functions as you wish. This allows the modular design and free scalability of a drive system. This enables full utilization of capacity.

STOBER engineering software

Our AS6 engineering software based on Codesys plays a leading role in the STOBER system. The AS6 has a whole series of new and useful features integrated into it that make your work easier in every phase of the project. Comprehensive libraries provide direct access to STOBER products from every level of the drive system. You can find detailed technical information and have ready access to presets for standard functions.

STOBER is your partner

Our role does not end with the delivery of hardware and software. If you like, we will accompany and support you throughout your entire project. You can call on programming manpower at STOBER. Our experienced Codesys professionals will be happy to handle tricky special tasks or help you find the right template. This is even possible if components from other manufacturers are part of the bigger picture. You have direct, one-on-one contact with your project engineer. Your personal contact understands your needs and works with you to find the ideal solution.

You receive quick, professional feedback using the 24-hour hotline. You are not a number—you are our priority. We at STOBER do not have anything like a "service ticket."

Geographic proximity is also an intrinsic part of this personal contact. STOBER has four customer support centers throughout Germany. These support centers provide you with a high level of decision-making expertise. Your contacts have technical experience.
And STOBER is international. We have 10 subsidiaries across 3 continents. This is also a valuable part of being near to our customers.

Table of contents

1 Selection tool 9

2 C helical geared motors 17

3 F offset helical geared motors 59

4 K helical bevel geared motors 97

5 Asynchronous motors 193

6 SC6 Drive controllers 215

7 SI6 Drive controllers 237

8 SD6 Drive controllers 271

9 POSIDYN SDS 5000 Servo inverters 309

10 POSIDRIVE FDS 5000 Frequency inverters 341

11 Connection method 365

12 Close to customers around the world 370

13 Appendix 373

1 Selection tool

1.1 Asynchronous geared motors

Product chapter	C	F
Chapter number	[▷ 2]	[▷ 3]

Technical data

P_N	0.12 – 45 kW	0.12 – 7.5 kW
i	2 – 274	4.3 – 440
M_{2N}	2.5 – 8557 Nm	5.3 – 1342 Nm
η_{get}	≤ 97 %	≤ 97 %

An explanation of the formula symbols can be found in the chapter [▷ 13.1].

Features

Power density	★☆☆☆☆	★☆☆☆☆
Price category	€	€
Shaft load	★★☆☆☆	★★★☆☆
Smooth operation	★★★☆☆	★★★☆☆
Torsional stiffness	★★☆☆☆	★★☆☆☆
Mass moment of inertia	★★★★★	★★★★★
Key:	★☆☆☆☆ good | ★★★★★ excellent € Economy | €€€€€ Premium	
Shaft design		
Solid shaft with feather key	✓	✓
Solid shaft without feather key	C0 – C5: ✓ Starting at C6: Request	
Hollow shaft with keyway		✓
Hollow shaft with shrink ring		✓
Bearing design		
Standard	✓	✓
Maintenance-free	C0 – C5: ✓	✓

1 Selection tool

1.1 Asynchronous geared motors

Product chapter	**K**
Chapter number	[▷ 4]

Technical data

P_N	0.12 – 45 kW
i	4 – 381
M_{2N}	6.7 – 13970 Nm
η_{get}	≤ 97 %

An explanation of the formula symbols can be found in the chapter [▷ 13.1].

Features

Power density	★★☆☆☆
Price category	€€
Shaft load	★★★☆☆
Smooth operation	★★★☆☆
Torsional stiffness	★★☆☆☆
Mass moment of inertia	★★★★★
Key:	★☆☆☆☆ good | ★★★★★ excellent € Economy | €€€€€ Premium
Shaft design	
Solid shaft with feather key	✓
Solid shaft without feather key	K1 – K4: ✓ Starting at K5: Request
Solid shaft on both sides	✓
Hollow shaft with keyway	✓
Hollow shaft with shrink ring	✓
Bearing design	
Standard	✓
Maintenance-free	K1 – K4: ✓

1 Selection tool

1.2 Asynchronous motors

Product chapter	**D + IE3D**
Chapter number	[▶ 5]

Technical data

n_2	1360 – 2920 rpm
P_N	0.12 – 45 kW
M_N	0.62 – 290 Nm
I_N	0.44 – 84 A

An explanation of the formula symbols can be found in the chapter [▶ 13.1].

Features

Efficiency	D (up to 0.55 kW): ★★★☆☆ IE3D (0.75 kW and higher): ★★★★★
Price category	D (up to 0.55 kW): € IE3D (0.75 kW and higher): €€€
Key:	★☆☆☆☆ good | ★★★★★ excellent € Economy | €€€€€ Premium
Shaft design	
Direct attachment onto STOBER gear units	✓
IEC design	✓
Encoder	
Incremental encoders	✓
SSI multi-turn absolute encoders [1]	✓
Electrical connection	
Terminal box	✓
Cooling	
Self-ventilation	✓
Forced ventilation	✓
Brake	
Spring-loaded brake	✓
Marks and test symbols	
CE	✓
cURus	✓
EISA CC number including cURus	✓

[1] only in combination with forced ventilation

1 Selection tool

1.3 Drive controllers

Product chapter	**SC6**	**SI6**	**SD6**
Chapter number	[▶ 6]	[7]	[▶ 8]
Technical data			
$I_{2N,PU}$	4.5 – 19 A	5 – 50 A	2.3 – 85 A
$I_{2N,PU}$	4 – 15 A	4.5 – 40 A	1.7 – 60 A
I_{2maxPU}	9.5 – 39.9 A	10.5 – 105 A	4.2 – 153 A
I_{2maxPU}	10 – 37.5 A	11.3 – 100 A	4.3 – 150 A

An explanation of the formula symbols can be found in the chapter [▶ 13.1].

Features

Optimal application area			
Number of axes	1 – 4	> 4	1 – 8
Application	Drive based	Controller based	Drive based synchronous operation
Motor types			
Lean motors	✓	✓	
Asynchronous motors	✓	✓	✓
Synchronous servo motors	✓	✓	✓
Linear motors			✓
Torque motors	✓	✓	✓
Encoder interfaces			
EnDat 2.1/2.2 digital	✓	✓	✓
Incremental	✓	✓	✓
SSI	✓	✓	✓
Resolver	✓	✓	(✓)
Pulse/direction signals	✓	✓	(✓)
EnDat 2.1 sin/cos			(✓)
Sin/cos			(✓)
HIPERFACE DSL	✓	✓	

(✓): Terminal module required

Motor temperature sensor			
PTC thermistor	✓	✓	✓
Pt1000 temperature sensor			✓

1 Selection tool

1.3 Drive controllers

Product chapter	**SC6**	**SI6**	**SD6**
Chapter number	[▶ 6]	[7]	[▶ 8]
Features			
Communication			
Isochronic system bus (IGB motion bus)			✓
CANopen			(✓)
EtherCAT	✓	✓	(✓)
PROFINET	✓	✓	(✓)
(✓): Communication module required			
Safety functions			
STO, SS1: SIL 3, PL e (cat. 4)	(✓)	(✓)	(✓)
SS2, SLS, SBC, SBT, SDI, SLI: SIL 3, PL e (cat. 4)			(✓)
(✓): Safety module required			
Terminals			
I/O	✓	✓	(✓)
Expanded I/O			(✓)
I/O with exp. encoder support			(✓)
(✓): Terminal module required			
Features			
Multi-axis drive system		✓	
Stand-alone	✓		✓
One Cable Solution	✓	✓	
Double-axis controller available	✓	✓	
Live firmware update	✓	✓	✓
Display and keyboard			✓
Removable data storage	✓	✓	✓
DC link connection	✓	✓	✓
Applications			
Torque/force mode	✓	✓	✓
Velocity mode	✓	✓	✓
Positioning mode	✓	✓	✓
Master/slave mode			✓
Interpolating mode	✓	✓	✓
Conformity			
cULus	(In preparation)	✓	✓
CE	✓	✓	✓

1 Selection tool

1.3 Drive controllers

Product chapter	SDS 5000	FDS 5000
Chapter number	[▶ 9]	[▶ 10]
Technical data		
$I_{2N,PU}$	2.3 – 85 A	1.3 – 16 A
$I_{2N,PU}$	1.7 – 60 A	1 – 10 A
I_{2maxPU}	4.2 – 153 A	2.4 – 28.8 A
I_{2maxPU}	4.3 – 150 A	2.5 – 25 A

An explanation of the formula symbols can be found in the chapter [▶ 13.1].

Features

Optimal application area		
Number of axes	1 – 8	1 – 4
Application	Drive based synchronous operation	Drive based
Motor types		
Asynchronous motors	✓	✓
Synchronous servo motors	✓	
Encoder interfaces		
EnDat 2.1/2.2 digital	✓	
Incremental	✓	✓
SSI	✓	
Resolver	(✓)	
Pulse/direction signals	(✓)	✓
EnDat 2.1 sin/cos	(✓)	
(✓): Terminal module required		
Motor temperature sensor		
PTC thermistor	✓	✓
Pt1000 temperature sensor	✓	✓
Communication		
Isochronic system bus (IGB motion bus)	✓	
CANopen	(✓)	(✓)
EtherCAT	(✓)	(✓)
PROFINET	(✓)	(✓)
PROFIBUS DP	(✓)	(✓)
(✓): Communication module required		

1 Selection tool

1.3 Drive controllers

Product chapter	**SDS 5000**	**FDS 5000**
Chapter number	[▶ 9]	[▶ 10]
Features		
Safety functions		
STO, SS1: SIL 3, PL e (cat. 3)	(✓)	(✓)
(✓): Safety module required		
Terminals		
I/O	(✓)	✓
Expanded I/O	(✓)	(✓)
I/O with exp. encoder support	(✓)	
(✓): Terminal module required		
Features		
Stand-alone	✓	✓
Live firmware update	✓	
Display and keyboard	✓	✓
Removable data storage	✓	✓
DC link connection	✓	✓
Applications		
Torque/force mode	✓	✓
Velocity mode	✓	✓
Positioning mode	✓	✓
Master/slave mode	✓	✓
Electronic cam disk	✓	✓
Conformity		
cULus	✓	✓
CE	✓	✓

1 Selection tool

1.4 Connection method

Product chapter	**Cables**
Chapter number	[▶ 11]

Encoder cables

Encoder	**Motor plug connector size**
	con.23
Incremental (HTL)	✓
SSI	✓

Encoder	**Supply cores (pair)**	**Signal cores (pair)**	**Cable ∅**	**Bending radius 1 (min.)**	**Bending radius 2 (min.)**
Incremental (HTL)	2 × 0.25 mm²	2 × 0.14 mm²	Max. 8.5 mm	85 mm	42.5 mm
SSI	2 × 0.25 mm²	2 × 0.14 mm²	Max. 8.5 mm	85 mm	42.5 mm

Bending radius: 1 = free to move, 2 = fixed installation

Other	
Torsional stress	± 30°/m
Bending resistance	✓
Resistant to oil and chemicals	✓

2 C helical geared motors

Table of contents

2.1 Overview ... 18

2.2 Selection tables ... 19

2.3 Dimensional drawings ... 39

2.3.1 Solid shaft design with feather key, N housing design (base) ... 40

2.3.2 Solid shaft design with feather key, G housing design (pitch circle diameter) ... 42

2.3.3 Solid shaft design with feather key, F housing design (round flange) ... 44

2.3.4 Solid shaft design with feather key, Q housing design (square flange) ... 46

2.3.5 Oil expansion tank ... 48

2.4 Type designation ... 49

2.5 Product description ... 50

2.5.1 Housing design ... 50

2.5.2 Shaft design ... 50

2.5.3 Installation conditions ... 50

2.5.4 Mounting positions ... 51

2.5.5 Lubricants ... 51

2.5.6 Position of the terminal box ... 52

2.5.7 Other product features ... 52

2.5.8 Losses due to splashing ... 52

2.5.9 Maintenance ... 52

2.5.10 Direction of rotation ... 53

2.6 Project configuration ... 54

2.6.1 Permitted shaft loads for the output shaft ... 56

2.6.2 Radial shaft seal rings ... 57

2.6.3 Oil expansion tank ... 57

2.7 Additional documentation ... 57

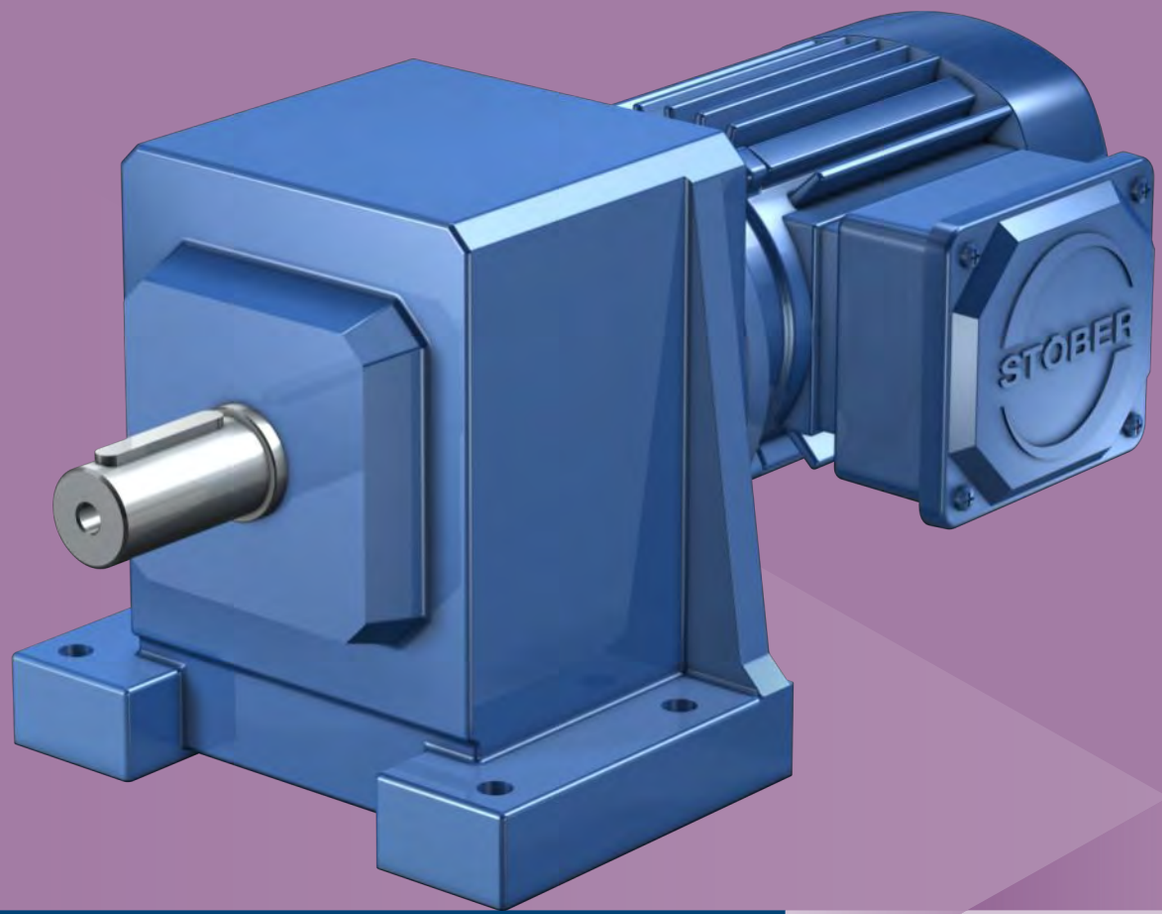

2 Helical geared motors C

2.1 Overview

Compact helical geared motors

Features

Power density	★☆☆☆☆
Backlash	★★☆☆☆
Price category	€
Shaft load	★★☆☆☆
Smooth operation	★★★☆☆
Torsional stiffness	★★☆☆☆
Mass moment of inertia	★★★★★
Helical gearing	✓
Maintenance-free (C0 – C5)	✓
FKM seal ring at the input	✓
Reinforced output bearing	✓ (on request)

Key: ★☆☆☆☆ good | ★★★★★ excellent
€ Economy | €€€€€ Premium

Technical data

P_N	0.12 – 45 kW
i	2 – 274
M_{2N}	2.5 – 8557 Nm
η_{get}	≤ 97 %

2.2 Selection tables

The technical data specified in the selection tables applies to:

- Installation altitudes up to 1000 m above sea level
- Surrounding temperatures from 0 °C to 40 °C
- Drives with self-ventilated motors
- Weight specification for mounting position EL1, housing design N

You can receive asynchronous geared motors with low output speed on request.

Asynchronous geared motors are ideal for operation on a drive controller (87 Hz). More information can be found in chapter [▷ 5.6.2]

An explanation of the formula symbols can be found in the chapter [▷ 13.1].

n_2 50 Hz [rpm]	S 50 Hz	n_2 87 Hz [rpm]	S 87 Hz	M_{2N} [Nm]	Type	m [kg]	i	i_{exakt}	J_1 [10^{-4}kgm²]
P_N (50 Hz) = 0,12 kW, P_N (87 Hz) = 0,21 kW									
7.5	0.81	13	0.81	148	C103_1840 D063K04	18.6	183.7	2021/11	1.9
10	1.1	17	1.1	110	C103_1370 D063K04	18.6	137.3	10575/77	2.0
12	1.3	21	1.3	89	C103_1110 D063K04	18.6	111.1	1222/11	2.0
15	1.6	26	1.6	74	C103_0920 D063K04	18.6	92.13	16215/176	2.0
17	1.8	29	1.8	66	C103_0820 D063K04	18.6	81.64	31349/384	2.0
20	1.1	34	1.1	57	C002_0700 D063K04	10.8	69.88	559/8	1.9
22	1.2	38	1.2	51	C002_0620 D063K04	10.8	62.35	1247/20	1.9
24	1.3	42	1.3	46	C002_0560 D063K04	10.8	55.97	2015/36	1.9
27	1.5	48	1.5	41	C002_0500 D063K04	10.8	49.94	899/18	1.9
29	1.6	51	1.6	38	C002_0470 D063K04	10.8	46.82	7865/168	1.9
29	2.4	51	2.4	38	C102_0470 D063K04	15.7	46.91	516/11	2.0
33	1.8	57	1.8	34	C002_0420 D063K04	10.8	41.77	3509/84	1.9
33	2.4	57	2.4	34	C102_0420 D063K04	15.7	41.57	1247/30	2.0
39	2.1	68	2.1	29	C002_0350 D063K04	10.8	35.03	1261/36	1.9
44	2.4	76	2.4	25	C002_0310 D063K04	10.8	31.26	2813/90	1.9
49	2.6	85	2.6	23	C002_0280 D063K04	10.8	27.99	2015/72	2.0
55	2.8	95	2.8	20	C002_0250 D063K04	10.8	24.97	899/36	2.0
59	3.2	102	3.2	19	C002_0230 D063K04	10.8	23.21	325/14	2.0
66	3.2	115	3.2	17	C002_0210 D063K04	10.8	20.71	145/7	2.0
78	3.3	135	3.3	14	C002_0175 D063K04	10.8	17.53	3575/204	2.0
88	3.3	152	3.3	13	C002_0155 D063K04	10.8	15.64	1595/102	2.0
97	3.3	168	3.3	11	C002_0140 D063K04	10.8	14.08	169/12	2.1
109	3.3	189	3.3	10	C002_0125 D063K04	10.8	12.57	377/30	2.1
148	3.3	257	3.3	7.5	C002_0092 D063K04	10.8	9.228	1495/162	2.2
166	3.3	288	3.3	6.7	C002_0082 D063K04	10.8	8.235	667/81	2.2
178	3.2	308	3.2	6.3	C002_0077 D063K04	10.8	7.714	54/7	2.0
217	3.3	377	3.3	5.1	C002_0063 D063K04	10.8	6.300	2035/323	2.0
235	3.3	407	3.3	4.7	C002_0058 D063K04	10.8	5.824	99/17	2.0
271	3.3	469	3.3	4.1	C002_0051 D063K04	10.8	5.063	481/95	2.1
293	3.3	507	3.3	3.8	C002_0047 D063K04	10.8	4.680	117/25	2.1
413	3.3	715	3.3	2.7	C002_0033 D063K04	10.8	3.318	1702/513	2.3
447	3.3	774	3.3	2.5	C002_0031 D063K04	10.8	3.067	46/15	2.3
P_N (50 Hz) = 0,18 kW, P_N (87 Hz) = 0,31 kW									
5.0	1.1	8.6	1.1	330	C303_2740 D063M04	29.4	273.7	26273/96	2.5
6.2	1.3	11	1.3	265	C303_2200 D063M04	29.4	219.9	58045/264	2.5
7.4	0.91	13	0.91	221	C203_1830 D063M04	25.0	183.4	99029/540	2.5
7.4	1.6	13	1.6	220	C303_1830 D063M04	29.4	182.8	1645/9	2.5
9.9	1.2	17	1.2	166	C203_1380 D063M04	25.0	137.8	16121/117	2.5
12	0.90	21	0.90	134	C103_1110 D063M04	19.0	111.1	1222/11	2.5
12	1.5	21	1.5	133	C203_1110 D063M04	25.0	110.6	191149/1728	2.5
15	1.1	26	1.1	111	C103_0920 D063M04	19.0	92.13	16215/176	2.5
15	1.8	25	1.8	111	C203_0920 D063M04	25.0	92.40	29939/324	2.5
17	1.2	29	1.2	98	C103_0820 D063M04	19.0	81.64	31349/384	2.5
17	2.0	29	2.0	97	C203_0810 D063M04	25.0	80.62	11609/144	2.5
24	0.88	42	0.88	68	C002_0560 D063M04	11.2	55.97	2015/36	2.4
27	0.98	47	0.98	61	C002_0500 D063M04	11.2	49.94	899/18	2.4
29	1.0	50	1.0	57	C002_0470 D063M04	11.2	46.82	7865/168	2.4
29	1.6	50	1.6	57	C102_0470 D063M04	16.1	46.91	516/11	2.5
33	1.2	56	1.2	51	C002_0420 D063M04	11.2	41.77	3509/84	2.4
33	1.6	57	1.6	51	C102_0420 D063M04	16.1	41.57	1247/30	2.5

n_2 50 Hz [rpm]	S 50 Hz	n_2 87 Hz [rpm]	S 87 Hz	M_{2N} [Nm]	Type	m [kg]	i	i_{exakt}	J_1 [10^{-4}kgm²]
P_N (50 Hz) = 0,18 kW, P_N (87 Hz) = 0,31 kW									
39	1.4	67	1.4	43	C002_0350 D063M04	11.2	35.03	1261/36	2.4
44	1.6	75	1.6	38	C002_0310 D063M04	11.2	31.26	2813/90	2.4
49	1.8	84	1.8	34	C002_0280 D063M04	11.2	27.99	2015/72	2.5
54	1.9	94	1.9	31	C002_0250 D063M04	11.2	24.97	899/36	2.5
59	2.1	101	2.1	28	C002_0230 D063M04	11.2	23.21	325/14	2.5
66	2.2	114	2.2	25	C002_0210 D063M04	11.2	20.71	145/7	2.5
78	2.2	134	2.2	21	C002_0175 D063M04	11.2	17.53	3575/204	2.5
87	2.2	151	2.2	19	C002_0155 D063M04	11.2	15.64	1595/102	2.5
97	2.2	167	2.2	17	C002_0140 D063M04	11.2	14.08	169/12	2.6
108	2.2	187	2.2	15	C002_0125 D063M04	11.2	12.57	377/30	2.6
147	2.2	255	2.2	11	C002_0092 D063M04	11.2	9.228	1495/162	2.7
165	2.2	286	2.2	10	C002_0082 D063M04	11.2	8.235	667/81	2.7
176	2.2	305	2.2	9.4	C002_0077 D063M04	11.2	7.714	54/7	2.5
216	2.2	374	2.2	7.7	C002_0063 D063M04	11.2	6.300	2035/323	2.5
234	2.2	404	2.2	7.1	C002_0058 D063M04	11.2	5.824	99/17	2.5
269	2.2	465	2.2	6.2	C002_0051 D063M04	11.2	5.063	481/95	2.6
291	2.2	503	2.2	5.7	C002_0047 D063M04	11.2	4.680	117/25	2.6
410	2.2	710	2.2	4.1	C002_0033 D063M04	11.2	3.318	1702/513	2.8
443	2.2	768	2.2	3.7	C002_0031 D063M04	11.2	3.067	46/15	2.8
P_N (50 Hz) = 0,25 kW, P_N (87 Hz) = 0,43 kW									
6.3	0.97	11	0.97	362	C303_2200 D071K04	31.0	219.9	58045/264	4.1
7.6	1.2	13	1.2	301	C303_1830 D071K04	31.0	182.8	1645/9	4.1
10	0.88	17	0.88	227	C203_1380 D071K04	26.6	137.8	16121/117	4.1
10	1.6	17	1.6	226	C303_1370 D071K04	31.0	137.2	59267/432	4.1
13	1.1	22	1.1	182	C203_1110 D071K04	26.6	110.6	191149/1728	4.1
13	1.9	22	1.9	180	C303_1100 D071K04	31.0	109.6	94705/864	4.1
15	1.3	26	1.3	152	C203_0920 D071K04	26.6	92.40	29939/324	4.1
15	2.3	26	2.3	151	C303_0920 D071K04	31.0	91.93	39715/432	4.1
17	0.89	29	0.89	134	C103_0820 D071K04	20.6	81.64	31349/384	4.1
17	1.5	30	1.5	133	C203_0810 D071K04	26.6	80.62	11609/144	4.1
17	2.6	29	2.6	134	C303_0810 D071K04	31.0	81.47	1222/15	4.1
20	1.0	34	1.0	118	C102_0700 D071K04	17.7	70.46	775/11	4.0
20	1.7	34	1.7	117	C202_0700 D071K04	21.7	70.32	7595/108	4.1
22	1.1	38	1.1	104	C102_0620 D071K04	17.7	62.43	4495/72	4.0
23	1.8	39	1.8	102	C202_0610 D071K04	21.7	61.35	2945/48	4.1
25	1.3	43	1.3	94	C102_0560 D071K04	17.7	56.36	620/11	4.0
28	1.4	48	1.4	83	C102_0500 D071K04	17.7	49.94	899/18	4.0
30	1.5	51	1.5	78	C102_0470 D071K04	17.7	46.91	516/11	4.1
33	0.86	57	0.86	70	C002_0420 D071K04	12.8	41.77	3509/84	4.0
33	1.7	58	1.7	69	C102_0420 D071K04	17.7	41.57	1247/30	4.1
40	1.0	68	1.0	58	C002_0350 D071K04	12.8	35.03	1261/36	4.0
39	2.1	68	2.1	59	C102_0350 D071K04	17.7	35.07	2700/77	4.1
44	1.2	77	1.2	52	C002_0310 D071K04	12.8	31.26	2813/90	4.0
45	2.3	77	2.3	52	C102_0310 D071K04	17.7	31.07	435/14	4.1
49	1.3	86	1.3	47	C002_0280 D071K04	12.8	27.99	2015/72	4.1
55	1.4	96	1.4	42	C002_0250 D071K04	12.8	24.97	899/36	4.1
59	3.1	102	3.1	39	C102_0240 D071K04	17.7	23.52	1035/44	4.2
60	1.5	103	1.5	39	C002_0230 D071K04	12.8	23.21	325/14	4.1
67	1.7	116	1.7	35	C002_0210 D071K04	12.8	20.71	145/7	4.1
66	3.5	115	3.5	35	C102_0210 D071K04	17.7	20.84	667/32	4.2
79	2.1	137	2.1	29	C002_0175 D071K04	12.8	17.53	3575/204	4.1
89	2.3	153	2.3	26	C002_0155 D071K04	12.8	15.64	1595/102	4.1
98	2.6	170	2.6	23	C002_0140 D071K04	12.8	14.08	169/12	4.2
110	2.9	191	2.9	21	C002_0125 D071K04	12.8	12.57	377/30	4.2
120	3.1	208	3.1	19	C002_0115 D071K04	12.8	11.54	3185/276	4.2
135	3.5	233	3.5	17	C002_0105 D071K04	12.8	10.30	1421/138	4.2
150	3.5	260	3.5	15	C002_0092 D071K04	12.8	9.228	1495/162	4.3
168	3.5	291	3.5	14	C002_0082 D071K04	12.8	8.235	667/81	4.3
178	3.5	308	3.5	13	C102_0078 D071K04	17.7	7.796	3243/416	4.2
180	3.3	311	3.3	13	C002_0077 D071K04	12.8	7.714	54/7	4.1
220	3.5	381	3.5	11	C002_0063 D071K04	12.8	6.300	2035/323	4.1
236	3.5	408	3.5	9.8	C102_0059 D071K04	17.7	5.875	47/8	4.4
238	3.5	412	3.5	9.7	C002_0058 D071K04	12.8	5.824	99/17	4.1
274	3.5	474	3.5	8.4	C002_0051 D071K04	12.8	5.063	481/95	4.2
296	3.5	513	3.5	7.8	C002_0047 D071K04	12.8	4.680	117/25	4.2

n_2 50 Hz [rpm]	S 50 Hz	n_2 87 Hz [rpm]	S 87 Hz	M_{2N} [Nm]	Type	m [kg]	i	i_{exakt}	J_1 [10^{-4}kgm²]
P_N (50 Hz) = 0,25 kW, P_N (87 Hz) = 0,43 kW									
331	3.5	573	3.5	7.0	C102_0042 D071K04	17.7	4.189	377/90	4.7
334	3.5	578	3.5	6.9	C002_0041 D071K04	12.8	4.149	1813/437	4.3
357	3.5	618	3.5	6.5	C102_0039 D071K04	17.7	3.883	1363/351	4.7
361	3.5	626	3.5	6.4	C002_0038 D071K04	12.8	3.835	441/115	4.3
417	3.5	723	3.5	5.5	C002_0033 D071K04	12.8	3.318	1702/513	4.4
452	3.5	782	3.5	5.1	C002_0031 D071K04	12.8	3.067	46/15	4.4
694	3.5	1201	3.5	3.3	C002_0020 D071K04	12.8	1.997	1480/741	4.7
844	3.3	–	–	2.7	C002_0033 D063M02	11.2	3.318	1702/513	1.9
913	3.3	–	–	2.5	C002_0031 D063M02	11.2	3.067	46/15	1.9
P_N (50 Hz) = 0,37 kW, P_N (87 Hz) = 0,64 kW									
10	1.0	17	1.0	338	C303_1370 D071L04	32.0	137.2	59267/432	5.1
12	1.3	22	1.3	270	C303_1100 D071L04	32.0	109.6	94705/864	5.1
15	0.88	26	0.88	228	C203_0920 D071L04	27.6	92.40	29939/324	5.1
15	1.5	26	1.5	227	C303_0920 D071L04	32.0	91.93	39715/432	5.1
17	1.0	29	1.0	199	C203_0810 D071L04	27.6	80.62	11609/144	5.1
17	1.7	29	1.7	201	C303_0810 D071L04	32.0	81.47	1222/15	5.1
19	1.1	34	1.1	176	C202_0700 D071L04	22.7	70.32	7595/108	5.1
22	1.2	39	1.2	154	C202_0610 D071L04	22.7	61.35	2945/48	5.1
24	0.85	42	0.85	141	C102_0560 D071L04	18.7	56.36	620/11	5.0
27	0.96	48	0.96	125	C102_0500 D071L04	18.7	49.94	899/18	5.0
29	1.0	51	1.0	117	C102_0470 D071L04	18.7	46.91	516/11	5.1
33	1.2	57	1.2	104	C102_0420 D071L04	18.7	41.57	1247/30	5.1
39	1.4	68	1.4	88	C102_0350 D071L04	18.7	35.07	2700/77	5.1
44	1.5	76	1.5	78	C102_0310 D071L04	18.7	31.07	435/14	5.1
49	0.86	85	0.86	70	C002_0280 D071L04	13.8	27.99	2015/72	5.1
55	0.96	95	0.96	62	C002_0250 D071L04	13.8	24.97	899/36	5.1
58	2.0	101	2.0	59	C102_0240 D071L04	18.7	23.52	1035/44	5.2
59	1.0	102	1.0	58	C002_0230 D071L04	13.8	23.21	325/14	5.1
66	1.2	115	1.2	52	C002_0210 D071L04	13.8	20.71	145/7	5.1
66	2.3	114	2.3	52	C102_0210 D071L04	18.7	20.84	667/32	5.2
78	1.4	135	1.4	44	C002_0175 D071L04	13.8	17.53	3575/204	5.1
77	2.3	134	2.3	44	C102_0175 D071L04	18.7	17.73	195/11	5.3
88	1.5	152	1.5	39	C002_0155 D071L04	13.8	15.64	1595/102	5.1
87	2.3	151	2.3	39	C102_0155 D071L04	18.7	15.71	377/24	5.3
97	1.7	168	1.7	35	C002_0140 D071L04	13.8	14.08	169/12	5.2
109	1.9	189	1.9	31	C002_0125 D071L04	13.8	12.57	377/30	5.2
119	2.1	206	2.1	29	C002_0115 D071L04	13.8	11.54	3185/276	5.2
133	2.3	230	2.3	26	C002_0105 D071L04	13.8	10.30	1421/138	5.2
148	2.3	257	2.3	23	C002_0092 D071L04	13.8	9.228	1495/162	5.3
166	2.3	288	2.3	21	C002_0082 D071L04	13.8	8.235	667/81	5.3
176	2.3	304	2.3	20	C102_0078 D071L04	18.7	7.796	3243/416	5.2
178	2.2	308	2.2	19	C002_0077 D071L04	13.8	7.714	54/7	5.1
217	2.3	377	2.3	16	C002_0063 D071L04	13.8	6.300	2035/323	5.1
233	2.3	404	2.3	15	C102_0059 D071L04	18.7	5.875	47/8	5.4
235	2.3	407	2.3	15	C002_0058 D071L04	13.8	5.824	99/17	5.1
271	2.3	469	2.3	13	C002_0051 D071L04	13.8	5.063	481/95	5.2
293	2.3	507	2.3	12	C002_0047 D071L04	13.8	4.680	117/25	5.2
327	2.3	566	2.3	10	C102_0042 D071L04	18.7	4.189	377/90	5.7
330	2.3	572	2.3	10	C002_0041 D071L04	13.8	4.149	1813/437	5.3
353	2.3	611	2.3	9.7	C102_0039 D071L04	18.7	3.883	1363/351	5.7
357	2.3	619	2.3	9.6	C002_0038 D071L04	13.8	3.835	441/115	5.3
413	2.3	715	2.3	8.3	C002_0033 D071L04	13.8	3.318	1702/513	5.4
447	2.3	774	2.3	7.7	C002_0031 D071L04	13.8	3.067	46/15	5.4
686	2.3	1188	2.3	5.0	C002_0020 D071L04	13.8	1.997	1480/741	5.7
716	4.7	–	–	4.8	C102_0039 D071K02	17.6	3.883	1363/351	3.2
725	4.7	–	–	4.7	C002_0038 D071K02	12.7	3.835	441/115	2.8
838	4.7	–	–	4.1	C002_0033 D071K02	12.7	3.318	1702/513	2.9
906	4.7	–	–	3.8	C002_0031 D071K02	12.7	3.067	46/15	2.9
1392	4.7	–	–	2.5	C002_0020 D071K02	12.7	1.997	1480/741	3.2
P_N (50 Hz) = 0,55 kW, P_N (87 Hz) = 0,95 kW									
5.2	0.83	9.0	0.83	970	C503_2710 D080K04	56.3	270.5	58435/216	8.9
5.3	1.4	9.1	1.4	955	C613_2660 D080K04	76.1	266.4	7192/27	8.9
6.5	1.0	11	1.0	774	C503_2160 D080K04	56.3	215.9	1943/9	8.9
6.6	1.7	11	1.7	764	C613_2130 D080K04	76.1	213.1	28768/135	9.0
7.8	1.2	13	1.2	648	C503_1810 D080K04	56.3	180.6	8671/48	8.9

n_2 50 Hz [rpm]	S 50 Hz	n_2 87 Hz [rpm]	S 87 Hz	M_{2N} [Nm]	Type	m [kg]	i	i_{exakt}	J_1 [10^{-4}kgm²]
P_N (50 Hz) = 0,55 kW, P_N (87 Hz) = 0,95 kW									
7.8	0.85	13	0.85	647	C403_1800 D080K04	45.3	180.4	1624/9	8.9
8.0	2.1	14	2.1	628	C613_1750 D080K04	76.1	175.3	7888/45	9.0
10	1.1	18	1.1	483	C403_1350 D080K04	45.3	134.6	1885/14	8.9
10	1.6	18	1.6	485	C503_1350 D080K04	56.3	135.3	406/3	9.0
10	2.3	18	2.3	483	C613_1350 D080K04	76.1	134.8	15776/117	9.1
13	2.1	22	2.1	390	C503_1090 D080K04	56.3	108.6	31291/288	9.0
13	0.90	22	0.90	388	C303_1080 D080K04	34.8	108.2	11687/108	8.9
13	1.4	23	1.4	386	C403_1080 D080K04	45.3	107.7	754/7	9.0
13	2.3	23	2.3	380	C613_1060 D080K04	76.1	106.1	3712/35	9.2
15	1.1	27	1.1	325	C303_0910 D080K04	34.8	90.76	4901/54	8.9
16	1.7	27	1.7	324	C403_0900 D080K04	45.3	90.32	8671/96	9.0
16	2.3	27	2.3	324	C503_0900 D080K04	56.3	90.32	8671/96	9.1
17	1.9	30	1.9	290	C403_0810 D080K04	45.3	80.81	42021/520	9.0
17	2.3	30	2.3	289	C503_0810 D080K04	56.3	80.60	19343/240	9.1
17	1.2	30	1.2	288	C303_0800 D080K04	34.8	80.43	6032/75	8.9
18	2.3	32	2.3	272	C613_0760 D080K04	76.1	75.81	5307/70	9.2
20	1.4	35	1.4	254	C302_0700 D080K04	30.6	69.88	559/8	8.8
23	1.5	39	1.5	225	C302_0620 D080K04	30.6	61.92	1548/25	8.8
25	0.97	43	0.97	205	C202_0560 D080K04	25.5	56.42	1862/33	8.8
28	1.1	49	1.1	179	C202_0490 D080K04	25.5	49.23	1083/22	8.8
30	1.2	52	1.2	170	C202_0470 D080K04	25.5	46.82	2107/45	8.8
30	2.1	52	2.1	170	C302_0470 D080K04	30.6	46.67	140/3	8.9
34	1.3	59	1.3	149	C202_0410 D080K04	25.5	40.85	817/20	8.8
34	2.3	59	2.3	150	C302_0410 D080K04	30.6	41.35	2688/65	8.9
40	0.94	69	0.94	128	C102_0350 D080K04	21.5	35.07	2700/77	8.8
40	1.6	69	1.6	128	C202_0350 D080K04	25.5	35.18	1372/39	8.9
45	1.1	78	1.1	113	C102_0310 D080K04	21.5	31.07	435/14	8.8
46	1.8	79	1.8	112	C202_0310 D080K04	25.5	30.69	399/13	8.9
49	1.2	85	1.2	103	C102_0280 D080K04	21.5	28.36	312/11	8.9
50	1.9	86	1.9	103	C202_0280 D080K04	25.5	28.24	4067/144	9.0
50	3.2	87	3.2	102	C302_0280 D080K04	30.6	27.99	2015/72	9.2
56	1.3	96	1.3	91	C102_0250 D080K04	21.5	25.13	377/15	8.9
57	2.2	98	2.2	90	C202_0250 D080K04	25.5	24.64	1577/64	9.0
60	1.4	103	1.4	86	C102_0240 D080K04	21.5	23.52	1035/44	8.9
59	2.3	103	2.3	86	C202_0240 D080K04	25.5	23.59	637/27	9.1
67	1.6	116	1.6	76	C102_0210 D080K04	21.5	20.84	667/32	8.9
68	2.7	118	2.7	75	C202_0210 D080K04	25.5	20.58	247/12	9.1
80	0.94	138	0.94	64	C002_0175 D080K04	16.6	17.53	3575/204	8.8
79	1.9	137	1.9	64	C102_0175 D080K04	21.5	17.73	195/11	9.0
80	3.1	138	3.1	64	C202_0175 D080K04	25.5	17.52	3626/207	9.3
90	1.1	155	1.1	57	C002_0155 D080K04	16.6	15.64	1595/102	8.8
89	2.1	154	2.1	57	C102_0155 D080K04	21.5	15.71	377/24	9.0
99	1.2	172	1.2	51	C002_0140 D080K04	16.6	14.08	169/12	8.9
100	2.3	173	2.3	51	C102_0140 D080K04	21.5	14.06	2010/143	9.1
111	1.3	193	1.3	46	C002_0125 D080K04	16.6	12.57	377/30	8.9
112	2.6	195	2.6	45	C102_0125 D080K04	21.5	12.46	1943/156	9.1
121	1.4	210	1.4	42	C002_0115 D080K04	16.6	11.54	3185/276	8.9
119	2.8	207	2.8	43	C102_0115 D080K04	21.5	11.72	1160/99	9.2
136	1.6	235	1.6	37	C002_0105 D080K04	16.6	10.30	1421/138	8.9
135	3.2	234	3.2	38	C102_0105 D080K04	21.5	10.38	841/81	9.2
150	3.2	260	3.2	34	C102_0093 D080K04	21.5	9.326	3180/341	9.4
152	1.8	263	1.7	34	C002_0092 D080K04	16.6	9.228	1495/162	9.0
169	3.2	293	3.2	30	C102_0083 D080K04	21.5	8.263	1537/186	9.4
170	2.0	294	1.9	30	C002_0082 D080K04	16.6	8.235	667/81	9.0
180	3.2	311	3.2	28	C102_0078 D080K04	21.5	7.796	3243/416	8.9
181	1.9	314	1.7	28	C002_0077 D080K04	16.6	7.714	54/7	8.8
222	2.2	385	1.9	23	C002_0063 D080K04	16.6	6.300	2035/323	8.8
238	3.2	413	3.2	21	C102_0059 D080K04	21.5	5.875	47/8	9.1
240	2.3	416	2.0	21	C002_0058 D080K04	16.6	5.824	99/17	8.8
277	2.6	479	2.2	18	C002_0051 D080K04	16.6	5.063	481/95	8.9
279	3.2	483	3.2	18	C102_0050 D080K04	21.5	5.025	201/40	9.2
299	2.7	518	2.3	17	C002_0047 D080K04	16.6	4.680	117/25	8.9
334	3.2	579	3.2	15	C102_0042 D080K04	21.5	4.189	377/90	9.4
337	2.9	584	2.5	15	C002_0041 D080K04	16.6	4.149	1813/437	9.0
361	3.2	624	3.2	14	C102_0039 D080K04	21.5	3.883	1363/351	9.4

n_2 50 Hz [rpm]	S 50 Hz	n_2 87 Hz [rpm]	S 87 Hz	M_{2N} [Nm]	Type	m [kg]	i	i_{exakt}	J_1 [10^{-4}kgm²]
P_N (50 Hz) = 0,55 kW, P_N (87 Hz) = 0,95 kW									
365	3.1	632	2.6	14	C002_0038 D080K04	16.6	3.835	441/115	9.0
422	3.2	731	2.9	12	C002_0033 D080K04	16.6	3.318	1702/513	9.1
456	3.2	791	3.1	11	C002_0031 D080K04	16.6	3.067	46/15	9.1
506	3.2	876	3.2	10	C002_0028 D080K04	16.6	2.769	36/13	9.1
701	3.2	1214	3.2	7.3	C002_0020 D080K04	16.6	1.997	1480/741	9.4
715	3.2	–	–	7.1	C102_0039 D071L02	18.5	3.883	1363/351	3.9
724	3.2	–	–	7.0	C002_0038 D071L02	13.6	3.835	441/115	3.5
836	3.2	–	–	6.1	C002_0033 D071L02	13.6	3.318	1702/513	3.6
905	3.2	–	–	5.6	C002_0031 D071L02	13.6	3.067	46/15	3.6
1390	3.2	–	–	3.7	C002_0020 D071L02	13.6	1.997	1480/741	3.9
P_N (50 Hz) = 0,75 kW, P_N (87 Hz) = 1,30 kW									
5.4	1.0	9.4	1.0	1273	C613_2660 IE3D080L04	82.5	266.4	7192/27	26
6.8	1.3	12	1.3	1019	C613_2130 IE3D080L04	82.5	213.1	28768/135	26
8.0	0.93	14	0.93	863	C503_1810 IE3D080L04	62.7	180.6	8671/48	26
8.2	1.6	14	1.6	838	C613_1750 IE3D080L04	82.5	175.3	7888/45	26
11	0.86	19	0.86	644	C403_1350 IE3D080L04	51.7	134.6	1885/14	26
11	1.2	18	1.2	647	C503_1350 IE3D080L04	62.7	135.3	406/3	26
11	2.0	19	2.0	645	C613_1350 IE3D080L04	82.5	134.8	15776/117	26
13	1.5	23	1.5	519	C503_1090 IE3D080L04	62.7	108.6	31291/288	26
13	1.1	23	1.1	515	C403_1080 IE3D080L04	51.7	107.7	754/7	26
14	2.5	24	2.5	507	C613_1060 IE3D080L04	82.5	106.1	3712/35	27
16	0.81	28	0.81	434	C303_0910 IE3D080L04	41.2	90.76	4901/54	26
16	1.3	28	1.3	432	C403_0900 IE3D080L04	51.7	90.32	8671/96	26
16	1.9	28	1.9	432	C503_0900 IE3D080L04	62.7	90.32	8671/96	26
18	1.4	31	1.4	386	C403_0810 IE3D080L04	51.7	80.81	42021/520	26
18	2.1	31	2.1	385	C503_0810 IE3D080L04	62.7	80.60	19343/240	26
18	0.91	31	0.91	384	C303_0800 IE3D080L04	41.2	80.43	6032/75	26
19	2.5	33	2.5	362	C613_0760 IE3D080L04	82.5	75.81	5307/70	27
21	1.0	36	1.0	339	C302_0700 IE3D080L04	37.0	69.88	559/8	26
21	1.6	36	1.6	339	C402_0700 IE3D080L04	47.2	69.88	559/8	26
21	2.4	36	2.4	339	C502_0700 IE3D080L04	58.8	69.97	10075/144	26
23	1.7	40	1.7	303	C402_0630 IE3D080L04	47.2	62.52	8127/130	26
23	1.1	40	1.1	300	C302_0620 IE3D080L04	37.0	61.92	1548/25	26
23	2.4	40	2.4	303	C502_0620 IE3D080L04	58.8	62.43	4495/72	26
26	1.3	45	1.3	272	C302_0560 IE3D080L04	37.0	56.14	1235/22	26
26	2.0	45	2.0	272	C402_0560 IE3D080L04	47.2	56.10	9425/168	26
29	1.5	50	1.5	241	C302_0500 IE3D080L04	37.0	49.75	2736/55	26
29	2.3	50	2.3	243	C402_0500 IE3D080L04	47.2	50.19	1305/26	26
29	0.84	51	0.84	239	C202_0490 IE3D080L04	31.9	49.23	1083/22	26
31	0.88	53	0.88	227	C202_0470 IE3D080L04	31.9	46.82	2107/45	26
31	1.5	54	1.5	226	C302_0470 IE3D080L04	37.0	46.67	140/3	26
31	2.4	54	2.4	226	C402_0470 IE3D080L04	47.2	46.67	140/3	27
35	2.7	60	2.7	202	C402_0420 IE3D080L04	47.2	41.75	7056/169	27
35	1.0	61	1.0	198	C202_0410 IE3D080L04	31.9	40.85	817/20	26
35	1.7	61	1.7	201	C302_0410 IE3D080L04	37.0	41.35	2688/65	26
41	1.2	71	1.2	171	C202_0350 IE3D080L04	31.9	35.18	1372/39	26
41	2.1	71	2.1	170	C302_0350 IE3D080L04	37.0	35.03	1261/36	26
47	1.3	82	1.3	149	C202_0310 IE3D080L04	31.9	30.69	399/13	26
47	2.3	81	2.3	151	C302_0310 IE3D080L04	37.0	31.04	776/25	26
51	0.87	88	0.87	138	C102_0280 IE3D080L04	27.9	28.36	312/11	26
51	1.5	89	1.5	137	C202_0280 IE3D080L04	31.9	28.24	4067/144	26
52	2.6	89	2.6	136	C302_0280 IE3D080L04	37.0	27.99	2015/72	27
57	0.98	100	0.98	122	C102_0250 IE3D080L04	27.9	25.13	377/15	26
59	1.7	102	1.7	120	C202_0250 IE3D080L04	31.9	24.64	1577/64	26
58	2.9	101	2.9	120	C302_0250 IE3D080L04	37.0	24.80	124/5	27
61	1.1	106	1.1	114	C102_0240 IE3D080L04	27.9	23.52	1035/44	26
61	1.7	106	1.7	114	C202_0240 IE3D080L04	31.9	23.59	637/27	26
62	3.1	107	3.1	114	C302_0230 IE3D080L04	37.0	23.47	845/36	27
69	1.2	120	1.2	101	C102_0210 IE3D080L04	27.9	20.84	667/32	26
70	2.0	122	2.0	100	C202_0210 IE3D080L04	31.9	20.58	247/12	26
82	1.4	141	1.4	86	C102_0175 IE3D080L04	27.9	17.73	195/11	26
82	2.4	143	2.4	85	C202_0175 IE3D080L04	31.9	17.52	3626/207	27
92	1.6	159	1.6	76	C102_0155 IE3D080L04	27.9	15.71	377/24	26
95	2.7	164	2.7	74	C202_0155 IE3D080L04	31.9	15.28	703/46	27
103	0.88	178	0.88	68	C002_0140 IE3D080L04	23.0	14.08	169/12	26

n_2 50 Hz [rpm]	S 50 Hz	n_2 87 Hz [rpm]	S 87 Hz	M_{2N} [Nm]	Type	m [kg]	i	i_{exakt}	J_1 [10^{-4}kgm²]
P_N (50 Hz) = 0,75 kW, P_N (87 Hz) = 1,30 kW									
103	1.8	178	1.8	68	C102_0140 IE3D080L04	27.9	14.06	2010/143	26
102	2.9	177	2.9	68	C202_0140 IE3D080L04	31.9	14.12	3430/243	27
115	0.98	199	0.98	61	C002_0125 IE3D080L04	23.0	12.57	377/30	26
116	2.0	201	2.0	60	C102_0125 IE3D080L04	27.9	12.46	1943/156	26
117	3.3	203	3.3	60	C202_0125 IE3D080L04	31.9	12.32	665/54	27
123	3.5	213	3.5	57	C202_0120 IE3D080L04	31.9	11.76	294/25	27
125	1.1	217	1.1	56	C002_0115 IE3D080L04	23.0	11.54	3185/276	26
123	2.1	214	2.1	57	C102_0115 IE3D080L04	27.9	11.72	1160/99	27
140	1.2	243	1.2	50	C002_0105 IE3D080L04	23.0	10.30	1421/138	26
139	2.4	241	2.4	50	C102_0105 IE3D080L04	27.9	10.38	841/81	27
155	2.7	268	2.6	45	C102_0093 IE3D080L04	27.9	9.326	3180/341	27
157	1.3	271	1.3	45	C002_0092 IE3D080L04	23.0	9.228	1495/162	26
175	3.0	303	2.8	40	C102_0083 IE3D080L04	27.9	8.263	1537/186	27
175	1.5	304	1.4	40	C002_0082 IE3D080L04	23.0	8.235	667/81	26
185	2.9	321	2.4	38	C102_0078 IE3D080L04	27.9	7.796	3243/416	26
187	1.5	324	1.2	37	C002_0077 IE3D080L04	23.0	7.714	54/7	26
229	1.7	397	1.4	31	C002_0063 IE3D080L04	23.0	6.300	2035/323	26
228	3.3	395	2.8	31	C102_0063 IE3D080L04	27.9	6.338	507/80	26
246	3.5	426	2.9	28	C102_0059 IE3D080L04	27.9	5.875	47/8	26
248	1.8	430	1.5	28	C002_0058 IE3D080L04	23.0	5.824	99/17	26
250	4.8	432	4.5	28	C202_0058 IE3D080L04	31.9	5.791	666/115	27
285	1.9	494	1.6	25	C002_0051 IE3D080L04	23.0	5.063	481/95	26
285	4.8	493	4.8	25	C202_0051 IE3D080L04	31.9	5.072	350/69	27
288	3.9	498	3.3	24	C102_0050 IE3D080L04	27.9	5.025	201/40	27
309	2.0	535	1.7	23	C002_0047 IE3D080L04	23.0	4.680	117/25	26
345	4.4	597	3.7	20	C102_0042 IE3D080L04	27.9	4.189	377/90	27
348	2.2	603	1.9	20	C002_0041 IE3D080L04	23.0	4.149	1813/437	26
372	4.6	645	3.9	19	C102_0039 IE3D080L04	27.9	3.883	1363/351	27
377	2.3	653	2.0	19	C002_0038 IE3D080L04	23.0	3.835	441/115	26
436	2.5	754	2.1	16	C002_0033 IE3D080L04	23.0	3.318	1702/513	26
471	2.7	816	2.3	15	C002_0031 IE3D080L04	23.0	3.067	46/15	26
522	2.9	904	2.4	13	C002_0028 IE3D080L04	23.0	2.769	36/13	26
664	4.8	1150	4.8	11	C102_0022 IE3D080L04	27.9	2.177	468/215	28
724	3.6	1253	3.0	9.7	C002_0020 IE3D080L04	23.0	1.997	1480/741	27
739	7.4	–	–	9.4	C102_0039 IE3D080K02	22.4	3.883	1363/351	7.9
748	3.7	–	–	9.3	C002_0038 IE3D080K02	17.5	3.835	441/115	7.5
865	4.1	–	–	8.0	C002_0033 IE3D080K02	17.5	3.318	1702/513	7.6
936	4.3	–	–	7.4	C002_0031 IE3D080K02	17.5	3.067	46/15	7.6
1036	4.6	–	–	6.7	C002_0028 IE3D080K02	17.5	2.769	36/13	7.6
1318	9.6	–	–	5.3	C102_0022 IE3D080K02	22.4	2.177	468/215	9.0
1437	5.8	–	–	4.8	C002_0020 IE3D080K02	17.5	1.997	1480/741	7.9
P_N (50 Hz) = 1,10 kW, P_N (87 Hz) = 1,91 kW									
6.8	0.87	12	0.87	1487	C613_2130 IE3D090S04	88.0	213.1	28768/135	40
8.2	1.1	14	1.1	1223	C613_1750 IE3D090S04	88.0	175.3	7888/45	40
11	0.85	18	0.85	944	C503_1350 IE3D090S04	68.2	135.3	406/3	40
11	1.4	18	1.4	941	C613_1350 IE3D090S04	88.0	134.8	15776/117	40
13	1.1	23	1.1	758	C503_1090 IE3D090S04	68.2	108.6	31291/288	40
14	1.7	24	1.7	740	C613_1060 IE3D090S04	88.0	106.1	3712/35	41
16	0.87	28	0.87	630	C403_0900 IE3D090S04	57.2	90.32	8671/96	40
16	1.3	28	1.3	630	C503_0900 IE3D090S04	68.2	90.32	8671/96	40
18	0.98	31	0.98	564	C403_0810 IE3D090S04	57.2	80.81	42021/520	40
18	1.4	31	1.4	562	C503_0810 IE3D090S04	68.2	80.60	19343/240	40
19	1.7	33	1.7	529	C613_0760 IE3D090S04	88.0	75.81	5307/70	41
21	1.1	36	1.1	495	C402_0700 IE3D090S04	52.7	69.88	559/8	40
21	1.6	36	1.6	495	C502_0700 IE3D090S04	64.3	69.97	10075/144	40
23	1.1	40	1.1	443	C402_0630 IE3D090S04	52.7	62.52	8127/130	40
23	1.6	40	1.6	442	C502_0620 IE3D090S04	64.3	62.43	4495/72	40
26	0.88	44	0.88	397	C302_0560 IE3D090S04	42.5	56.14	1235/22	40
26	1.4	44	1.4	397	C402_0560 IE3D090S04	52.7	56.10	9425/168	40
26	2.0	45	2.0	395	C502_0560 IE3D090S04	64.3	55.83	335/6	41
29	0.99	50	0.99	352	C302_0500 IE3D090S04	42.5	49.75	2736/55	40
29	1.5	50	1.5	355	C402_0500 IE3D090S04	52.7	50.19	1305/26	40
29	2.3	50	2.3	353	C502_0500 IE3D090S04	64.3	49.82	1943/39	41
31	1.1	53	1.1	330	C302_0470 IE3D090S04	42.5	46.67	140/3	40
31	1.7	53	1.7	330	C402_0470 IE3D090S04	52.7	46.67	140/3	41

n_2 50 Hz [rpm]	S 50 Hz	n_2 87 Hz [rpm]	S 87 Hz	M_{2N} [Nm]	Type	m [kg]	i	i_{exakt}	J_1 [10^{-4}kgm²]
P_N (50 Hz) = 1,10 kW, P_N (87 Hz) = 1,91 kW									
34	1.9	60	1.9	296	C402_0420 IE3D090S04	52.7	41.75	7056/169	41
35	1.2	60	1.2	293	C302_0410 IE3D090S04	42.5	41.35	2688/65	40
41	0.80	71	0.80	249	C202_0350 IE3D090S04	37.4	35.18	1372/39	40
41	1.4	71	1.4	248	C302_0350 IE3D090S04	42.5	35.03	1261/36	40
41	2.2	72	2.2	247	C402_0350 IE3D090S04	52.7	34.82	975/28	41
47	0.92	81	0.92	217	C202_0310 IE3D090S04	37.4	30.69	399/13	40
46	1.6	80	1.6	220	C302_0310 IE3D090S04	42.5	31.04	776/25	40
46	2.5	80	2.5	221	C402_0310 IE3D090S04	52.7	31.15	405/13	41
51	1.0	88	1.0	200	C202_0280 IE3D090S04	37.4	28.24	4067/144	40
51	1.8	89	1.8	198	C302_0280 IE3D090S04	42.5	27.99	2015/72	41
58	1.1	101	1.1	174	C202_0250 IE3D090S04	37.4	24.64	1577/64	40
58	2.0	101	2.0	176	C302_0250 IE3D090S04	42.5	24.80	124/5	41
61	1.2	106	1.2	167	C202_0240 IE3D090S04	37.4	23.59	637/27	40
61	2.1	106	2.1	166	C302_0230 IE3D090S04	42.5	23.47	845/36	41
69	0.81	120	0.81	148	C102_0210 IE3D090S04	33.4	20.84	667/32	40
70	1.4	121	1.4	146	C202_0210 IE3D090S04	37.4	20.58	247/12	40
69	2.4	120	2.4	147	C302_0210 IE3D090S04	42.5	20.80	104/5	41
81	0.96	141	0.96	126	C102_0175 IE3D090S04	33.4	17.73	195/11	40
82	1.6	142	1.6	124	C202_0175 IE3D090S04	37.4	17.52	3626/207	41
92	1.1	159	1.1	111	C102_0155 IE3D090S04	33.4	15.71	377/24	40
94	1.8	163	1.8	108	C202_0155 IE3D090S04	37.4	15.28	703/46	41
102	1.2	177	1.2	100	C102_0140 IE3D090S04	33.4	14.06	2010/143	40
102	2.0	177	2.0	100	C202_0140 IE3D090S04	37.4	14.12	3430/243	41
116	1.4	200	1.4	88	C102_0125 IE3D090S04	33.4	12.46	1943/156	40
117	2.3	203	2.3	87	C202_0125 IE3D090S04	37.4	12.32	665/54	41
122	2.4	212	2.4	83	C202_0120 IE3D090S04	37.4	11.76	294/25	41
123	1.4	213	1.4	83	C102_0115 IE3D090S04	33.4	11.72	1160/99	41
140	0.82	242	0.82	73	C002_0105 IE3D090S04	28.5	10.30	1421/138	40
139	1.6	240	1.6	74	C102_0105 IE3D090S04	33.4	10.38	841/81	41
140	2.8	243	2.7	73	C202_0105 IE3D090S04	37.4	10.26	513/50	41
154	1.8	267	1.7	66	C102_0093 IE3D090S04	33.4	9.326	3180/341	41
156	0.92	270	0.88	65	C002_0092 IE3D090S04	28.5	9.228	1495/162	40
174	2.1	302	1.9	59	C102_0083 IE3D090S04	33.4	8.263	1537/186	41
175	1.0	303	0.95	58	C002_0082 IE3D090S04	28.5	8.235	667/81	40
185	2.0	320	1.7	55	C102_0078 IE3D090S04	33.4	7.796	3243/416	40
185	3.0	320	2.5	55	C202_0078 IE3D090S04	37.4	7.800	39/5	41
187	1.0	323	0.84	55	C002_0077 IE3D090S04	28.5	7.714	54/7	40
229	1.1	396	0.96	45	C002_0063 IE3D090S04	28.5	6.300	2035/323	40
227	2.3	394	1.9	45	C102_0063 IE3D090S04	33.4	6.338	507/80	40
245	2.4	425	2.0	42	C102_0059 IE3D090S04	33.4	5.875	47/8	40
247	1.2	428	1.0	41	C002_0058 IE3D090S04	28.5	5.824	99/17	40
249	3.3	431	3.1	41	C202_0058 IE3D090S04	37.4	5.791	666/115	41
284	1.3	493	1.1	36	C002_0051 IE3D090S04	28.5	5.063	481/95	40
284	3.3	492	3.3	36	C202_0051 IE3D090S04	37.4	5.072	350/69	41
287	2.6	496	2.2	36	C102_0050 IE3D090S04	33.4	5.025	201/40	41
308	1.4	533	1.2	33	C002_0047 IE3D090S04	28.5	4.680	117/25	40
309	2.8	535	2.4	33	C102_0047 IE3D090S04	33.4	4.658	3149/676	41
344	3.0	595	2.5	30	C102_0042 IE3D090S04	33.4	4.189	377/90	41
347	1.5	601	1.3	29	C002_0041 IE3D090S04	28.5	4.149	1813/437	40
371	3.1	642	2.7	27	C102_0039 IE3D090S04	33.4	3.883	1363/351	41
375	1.6	650	1.3	27	C002_0038 IE3D090S04	28.5	3.835	441/115	40
434	1.7	752	1.5	23	C002_0033 IE3D090S04	28.5	3.318	1702/513	40
432	3.3	748	2.9	24	C102_0033 IE3D090S04	33.4	3.334	2067/620	41
470	1.8	813	1.6	22	C002_0031 IE3D090S04	28.5	3.067	46/15	40
466	3.3	807	3.1	22	C102_0031 IE3D090S04	33.4	3.091	2491/806	41
520	2.0	901	1.7	20	C002_0028 IE3D090S04	28.5	2.769	36/13	40
661	3.3	1146	3.3	15	C102_0022 IE3D090S04	33.4	2.177	468/215	42
721	2.4	1249	2.1	14	C002_0020 IE3D090S04	28.5	1.997	1480/741	41
743	5.1	–	–	14	C102_0039 IE3D080LX02	28.9	3.883	1363/351	18
752	2.6	–	–	13	C002_0038 IE3D080LX02	24.0	3.835	441/115	17
870	2.8	–	–	12	C002_0033 IE3D080LX02	24.0	3.318	1702/513	17
941	3.0	–	–	11	C002_0031 IE3D080LX02	24.0	3.067	46/15	17
1042	3.2	–	–	9.7	C002_0028 IE3D080LX02	24.0	2.769	36/13	17
1325	6.7	–	–	7.6	C102_0022 IE3D080LX02	28.9	2.177	468/215	19
1445	4.0	–	–	7.0	C002_0020 IE3D080LX02	24.0	1.997	1480/741	18

n_2 50 Hz [rpm]	S 50 Hz	n_2 87 Hz [rpm]	S 87 Hz	M_{2N} [Nm]	Type	m [kg]	i	i_{exakt}	J_1 [10^{-4}kgm²]
P_N (50 Hz) = 1,50 kW, P_N (87 Hz) = 2,60 kW									
11	1.0	19	1.0	1263	C613_1350 IE3D090LX04	96.5	134.8	15776/117	58
14	1.3	24	1.3	994	C613_1060 IE3D090LX04	96.5	106.1	3712/35	59
16	0.95	28	0.95	846	C503_0900 IE3D090LX04	76.7	90.32	8671/96	58
18	1.1	31	1.1	755	C503_0810 IE3D090LX04	76.7	80.60	19343/240	58
19	1.3	33	1.3	710	C613_0760 IE3D090LX04	96.5	75.81	5307/70	59
21	0.83	36	0.83	664	C402_0700 IE3D090LX04	61.2	69.88	559/8	58
21	1.2	36	1.2	665	C502_0700 IE3D090LX04	72.8	69.97	10075/144	58
23	0.84	40	0.84	594	C402_0630 IE3D090LX04	61.2	62.52	8127/130	58
23	1.2	40	1.2	593	C502_0620 IE3D090LX04	72.8	62.43	4495/72	58
26	1.0	45	1.0	533	C402_0560 IE3D090LX04	61.2	56.10	9425/168	58
26	1.5	45	1.5	531	C502_0560 IE3D090LX04	72.8	55.83	335/6	59
29	1.2	50	1.2	477	C402_0500 IE3D090LX04	61.2	50.19	1305/26	58
29	1.7	51	1.7	474	C502_0500 IE3D090LX04	72.8	49.82	1943/39	59
31	1.2	54	1.2	444	C402_0470 IE3D090LX04	61.2	46.67	140/3	59
35	1.4	60	1.4	397	C402_0420 IE3D090LX04	61.2	41.75	7056/169	59
35	0.89	61	0.89	393	C302_0410 IE3D090LX04	51.0	41.35	2688/65	58
42	1.1	72	1.1	333	C302_0350 IE3D090LX04	51.0	35.03	1261/36	58
42	1.7	72	1.7	331	C402_0350 IE3D090LX04	61.2	34.82	975/28	59
47	1.2	81	1.2	295	C302_0310 IE3D090LX04	51.0	31.04	776/25	58
47	1.9	81	1.9	296	C402_0310 IE3D090LX04	61.2	31.15	405/13	59
52	1.3	90	1.3	266	C302_0280 IE3D090LX04	51.0	27.99	2015/72	59
59	0.85	102	0.85	234	C202_0250 IE3D090LX04	45.9	24.64	1577/64	58
59	1.5	102	1.5	236	C302_0250 IE3D090LX04	51.0	24.80	124/5	59
62	0.89	107	0.89	224	C202_0240 IE3D090LX04	45.9	23.59	637/27	58
62	1.6	107	1.6	223	C302_0230 IE3D090LX04	51.0	23.47	845/36	59
71	1.0	122	1.0	196	C202_0210 IE3D090LX04	45.9	20.58	247/12	58
70	1.8	121	1.8	198	C302_0210 IE3D090LX04	51.0	20.80	104/5	59
83	1.2	144	1.2	167	C202_0175 IE3D090LX04	45.9	17.52	3626/207	59
93	0.80	160	0.80	149	C102_0155 IE3D090LX04	41.9	15.71	377/24	58
95	1.4	165	1.4	145	C202_0155 IE3D090LX04	45.9	15.28	703/46	59
104	0.90	179	0.90	134	C102_0140 IE3D090LX04	41.9	14.06	2010/143	58
103	1.5	179	1.5	134	C202_0140 IE3D090LX04	45.9	14.12	3430/243	59
117	1.0	202	1.0	118	C102_0125 IE3D090LX04	41.9	12.46	1943/156	58
118	1.7	205	1.7	117	C202_0125 IE3D090LX04	45.9	12.32	665/54	59
124	1.8	214	1.8	112	C202_0120 IE3D090LX04	45.9	11.76	294/25	59
124	1.1	215	1.1	111	C102_0115 IE3D090LX04	41.9	11.72	1160/99	59
140	1.2	243	1.2	99	C102_0105 IE3D090LX04	41.9	10.38	841/81	59
142	2.1	246	2.0	98	C202_0105 IE3D090LX04	45.9	10.26	513/50	59
156	1.4	270	1.3	89	C102_0093 IE3D090LX04	41.9	9.326	3180/341	59
176	1.5	305	1.4	79	C102_0083 IE3D090LX04	41.9	8.263	1537/186	59
187	1.5	323	1.2	74	C102_0078 IE3D090LX04	41.9	7.796	3243/416	58
187	2.2	323	1.9	74	C202_0078 IE3D090LX04	45.9	7.800	39/5	59
231	0.85	–	–	60	C002_0063 IE3D090LX04	37.0	6.300	2035/323	58
230	1.7	398	1.4	60	C102_0063 IE3D090LX04	41.9	6.338	507/80	58
231	2.4	400	2.2	60	C202_0063 IE3D090LX04	45.9	6.295	3330/529	59
248	1.8	429	1.5	56	C102_0059 IE3D090LX04	41.9	5.875	47/8	58
250	0.89	–	–	55	C002_0058 IE3D090LX04	37.0	5.824	99/17	58
251	2.4	435	2.3	55	C202_0058 IE3D090LX04	45.9	5.791	666/115	59
287	0.98	498	0.83	48	C002_0051 IE3D090LX04	37.0	5.063	481/95	58
287	2.4	497	2.4	48	C202_0051 IE3D090LX04	45.9	5.072	350/69	59
290	2.0	502	1.7	48	C102_0050 IE3D090LX04	41.9	5.025	201/40	59
311	1.0	538	0.87	44	C002_0047 IE3D090LX04	37.0	4.680	117/25	58
312	2.1	541	1.7	44	C102_0047 IE3D090LX04	41.9	4.658	3149/676	59
347	2.2	602	1.9	40	C102_0042 IE3D090LX04	41.9	4.189	377/90	59
351	1.1	607	0.94	39	C002_0041 IE3D090LX04	37.0	4.149	1813/437	58
375	2.3	649	2.0	37	C102_0039 IE3D090LX04	41.9	3.883	1363/351	59
379	1.2	657	0.99	36	C002_0038 IE3D090LX04	37.0	3.835	441/115	58
439	1.3	760	1.1	32	C002_0033 IE3D090LX04	37.0	3.318	1702/513	58
436	2.4	756	2.2	32	C102_0033 IE3D090LX04	41.9	3.334	2067/620	59
474	1.4	822	1.2	29	C002_0031 IE3D090LX04	37.0	3.067	46/15	58
471	2.4	815	2.3	29	C102_0031 IE3D090LX04	41.9	3.091	2491/806	59
525	1.5	910	1.2	26	C002_0028 IE3D090LX04	37.0	2.769	36/13	58
668	2.4	1158	2.4	21	C102_0022 IE3D090LX04	41.9	2.177	468/215	60
729	1.8	1262	1.5	19	C002_0020 IE3D090LX04	37.0	1.997	1480/741	59
721	2.4	1249	2.4	19	C102_0020 IE3D090LX04	41.9	2.018	1128/559	60

n_2 50 Hz [rpm]	S 50 Hz	n_2 87 Hz [rpm]	S 87 Hz	M_{2N} [Nm]	Type	m [kg]	i	i_{exakt}	J_1 [10^{-4}kgm²]
P_N (50 Hz) = 1,50 kW, P_N (87 Hz) = 2,60 kW									
747	3.8	–	–	18	C102_0039 IE3D090S02	29.9	3.883	1363/351	18
756	1.9	–	–	18	C002_0038 IE3D090S02	25.0	3.835	441/115	17
874	2.1	–	–	16	C002_0033 IE3D090S02	25.0	3.318	1702/513	17
946	2.2	–	–	15	C002_0031 IE3D090S02	25.0	3.067	46/15	17
1047	2.4	–	–	13	C002_0028 IE3D090S02	25.0	2.769	36/13	17
1332	4.9	–	–	10	C102_0022 IE3D090S02	29.9	2.177	468/215	19
1452	2.9	–	–	9.5	C002_0020 IE3D090S02	25.0	1.997	1480/741	18
P_N (50 Hz) = 2,20 kW, P_N (87 Hz) = 3,81 kW									
5.4	0.96	9.3	0.96	3740	C813_2700 IE3D100KX04	209.5	269.8	7285/27	111
6.8	1.2	12	1.2	2940	C813_2120 IE3D100KX04	209.5	212.1	8272/39	111
8.1	1.5	14	1.4	2472	C813_1780 IE3D100KX04	209.5	178.4	6956/39	111
10	1.9	18	1.7	1918	C813_1380 IE3D100KX04	209.5	138.4	2491/18	112
11	1.1	18	1.1	1904	C713_1370 IE3D100KX04	150.5	137.3	10575/77	111
11	1.3	19	1.1	1835	C713_1320 IE3D100KX04	150.5	132.4	33887/256	111
11	0.82	20	0.82	1759	C613_1270 IE3D100KX04	110.5	126.9	48739/384	111
13	2.2	23	2.0	1491	C813_1080 IE3D100KX04	209.5	107.6	4841/45	112
13	0.87	23	0.87	1489	C613_1070 IE3D100KX04	110.5	107.4	752/7	111
15	1.7	25	1.4	1374	C713_0990 IE3D100KX04	150.5	99.14	6345/64	111
15	1.1	26	1.1	1353	C613_0980 IE3D100KX04	110.5	97.63	243695/2496	111
16	2.2	28	2.2	1259	C813_0910 IE3D100KX04	209.5	90.82	18800/207	113
16	1.1	28	1.1	1231	C613_0890 IE3D100KX04	110.5	88.78	799/9	111
18	2.0	31	1.7	1122	C713_0810 IE3D100KX04	150.5	80.97	20727/256	111
18	2.2	32	2.0	1100	C813_0790 IE3D100KX04	209.5	79.34	285619/3600	112
19	1.4	33	1.4	1065	C613_0770 IE3D100KX04	110.5	76.80	8601/112	111
21	2.0	36	2.0	978	C712_0700 IE3D100KX04	137.4	69.55	765/11	112
21	1.3	36	1.3	969	C612_0690 IE3D100KX04	102.1	68.89	620/9	111
23	1.6	40	1.6	880	C613_0630 IE3D100KX04	110.5	63.46	48739/768	111
26	2.4	44	2.4	799	C712_0570 IE3D100KX04	137.4	56.82	625/11	113
26	1.0	45	1.0	785	C502_0560 IE3D100KX04	86.8	55.83	335/6	111
26	1.7	46	1.7	775	C612_0550 IE3D100KX04	102.1	55.11	496/9	112
29	1.1	50	1.1	701	C502_0500 IE3D100KX04	86.8	49.82	1943/39	111
29	2.1	51	2.0	683	C613_0490 IE3D100KX04	110.5	49.28	31537/640	111
31	0.84	54	0.84	656	C402_0470 IE3D100KX04	75.2	46.67	140/3	111
31	1.2	54	1.2	657	C502_0470 IE3D100KX04	86.8	46.72	1495/32	111
32	2.0	55	2.0	638	C612_0450 IE3D100KX04	102.1	45.33	136/3	112
35	0.94	60	0.94	587	C402_0420 IE3D100KX04	75.2	41.75	7056/169	111
35	1.4	60	1.4	586	C502_0420 IE3D100KX04	86.8	41.69	667/16	111
35	2.4	61	2.4	577	C712_0410 IE3D100KX04	137.4	41.02	2625/64	113
37	2.2	64	2.2	554	C612_0390 IE3D100KX04	102.1	39.40	1891/48	112
42	1.1	72	1.1	490	C402_0350 IE3D100KX04	75.2	34.82	975/28	111
41	1.6	72	1.6	492	C502_0350 IE3D100KX04	86.8	35.00	35/1	112
42	2.7	72	2.7	490	C612_0350 IE3D100KX04	102.1	34.87	1360/39	114
45	2.5	78	2.5	456	C612_0320 IE3D100KX04	102.1	32.41	1037/32	112
47	0.80	81	0.80	437	C302_0310 IE3D100KX04	65.0	31.04	776/25	110
47	1.3	81	1.3	438	C402_0310 IE3D100KX04	75.2	31.15	405/13	111
46	1.8	80	1.8	439	C502_0310 IE3D100KX04	86.8	31.23	406/13	112
52	0.89	90	0.89	394	C302_0280 IE3D100KX04	65.0	27.99	2015/72	111
52	1.4	90	1.4	392	C402_0280 IE3D100KX04	75.2	27.86	195/7	111
52	2.0	89	2.0	395	C502_0280 IE3D100KX04	86.8	28.10	5395/192	112
53	3.3	92	3.3	386	C612_0270 IE3D100KX04	102.1	27.43	192/7	115
58	1.0	101	1.0	349	C302_0250 IE3D100KX04	65.0	24.80	124/5	111
58	1.6	101	1.6	351	C402_0250 IE3D100KX04	75.2	24.92	324/13	111
58	2.3	100	2.3	353	C502_0250 IE3D100KX04	86.8	25.07	2407/96	112
62	1.1	107	1.1	330	C302_0230 IE3D100KX04	65.0	23.47	845/36	111
62	1.7	108	1.7	329	C402_0230 IE3D100KX04	75.2	23.36	1495/64	112
62	2.4	108	2.4	329	C502_0230 IE3D100KX04	86.8	23.36	1495/64	113
70	1.2	121	1.2	293	C302_0210 IE3D100KX04	65.0	20.80	104/5	111
69	1.9	120	1.9	294	C402_0210 IE3D100KX04	75.2	20.90	4347/208	112
70	2.7	120	2.7	293	C502_0210 IE3D100KX04	86.8	20.84	667/32	113
74	3.3	128	3.3	276	C612_0195 IE3D100KX04	102.1	19.61	549/28	115
83	0.81	143	0.81	246	C202_0175 IE3D100KX04	59.9	17.52	3626/207	111
83	1.4	143	1.4	247	C302_0175 IE3D100KX04	65.0	17.54	1105/63	111
82	2.2	143	2.2	248	C402_0175 IE3D100KX04	75.2	17.60	845/48	112
92	2.5	159	2.5	222	C402_0160 IE3D100KX04	75.2	15.75	63/4	113
95	0.93	164	0.93	215	C202_0155 IE3D100KX04	59.9	15.28	703/46	111

n_2 50 Hz [rpm]	S 50 Hz	n_2 87 Hz [rpm]	S 87 Hz	M_{2N} [Nm]	Type	m [kg]	i	i_{exakt}	J_1 [10^{-4}kgm²]
P_N (50 Hz) = 2,20 kW, P_N (87 Hz) = 3,81 kW									
93	1.6	162	1.6	219	C302_0155 IE3D100KX04	65.0	15.54	544/35	111
103	1.0	178	1.0	199	C202_0140 IE3D100KX04	59.9	14.12	3430/243	111
104	1.8	179	1.7	197	C302_0140 IE3D100KX04	65.0	13.99	2015/144	111
104	2.8	179	2.8	197	C402_0140 IE3D100KX04	75.2	13.99	2015/144	113
118	1.2	204	1.2	173	C202_0125 IE3D100KX04	59.9	12.32	665/54	111
117	2.0	203	1.9	174	C302_0125 IE3D100KX04	65.0	12.40	62/5	112
123	1.2	214	1.2	165	C202_0120 IE3D100KX04	59.9	11.76	294/25	111
125	2.1	216	1.9	163	C302_0115 IE3D100KX04	65.0	11.61	325/28	112
140	0.82	242	0.82	146	C102_0105 IE3D100KX04	55.9	10.38	841/81	111
141	1.4	245	1.4	144	C202_0105 IE3D100KX04	59.9	10.26	513/50	111
141	2.4	244	2.1	145	C302_0105 IE3D100KX04	65.0	10.29	72/7	112
154	1.5	268	1.4	132	C202_0094 IE3D100KX04	59.9	9.387	2450/261	111
155	0.92	269	0.88	131	C102_0093 IE3D100KX04	55.9	9.326	3180/341	111
156	2.7	270	2.2	131	C302_0093 IE3D100KX04	65.0	9.310	3575/384	113
175	1.0	304	0.95	116	C102_0083 IE3D100KX04	55.9	8.263	1537/186	111
176	2.9	304	2.4	116	C302_0083 IE3D100KX04	65.0	8.250	33/4	113
177	1.7	307	1.6	115	C202_0082 IE3D100KX04	59.9	8.190	475/58	112
186	1.0	322	0.84	110	C102_0078 IE3D100KX04	55.9	7.796	3243/416	110
186	1.5	322	1.3	110	C202_0078 IE3D100KX04	59.9	7.800	39/5	111
185	2.5	320	2.1	110	C302_0078 IE3D100KX04	65.0	7.841	494/63	111
229	1.1	396	0.96	89	C102_0063 IE3D100KX04	55.9	6.338	507/80	110
230	1.8	399	1.5	89	C202_0063 IE3D100KX04	59.9	6.295	3330/529	111
230	2.9	398	2.4	89	C302_0063 IE3D100KX04	65.0	6.314	221/35	111
247	1.2	427	1.0	83	C102_0059 IE3D100KX04	55.9	5.875	47/8	110
247	3.0	429	2.5	82	C302_0059 IE3D100KX04	65.0	5.859	2584/441	111
250	1.9	434	1.6	81	C202_0058 IE3D100KX04	59.9	5.791	666/115	111
286	2.0	495	1.7	71	C202_0051 IE3D100KX04	59.9	5.072	350/69	111
289	1.3	500	1.1	71	C102_0050 IE3D100KX04	55.9	5.025	201/40	111
288	3.3	499	2.8	71	C302_0050 IE3D100KX04	65.0	5.038	403/80	112
311	1.4	539	1.2	66	C102_0047 IE3D100KX04	55.9	4.658	3149/676	111
311	2.1	538	1.8	66	C202_0047 IE3D100KX04	59.9	4.667	14/3	111
313	4.1	543	4.1	65	C502_0046 IE3D100KX04	86.8	4.629	162/35	118
346	1.5	600	1.3	59	C102_0042 IE3D100KX04	55.9	4.189	377/90	111
343	2.3	594	1.9	59	C202_0042 IE3D100KX04	59.9	4.226	486/115	111
373	1.6	647	1.3	55	C102_0039 IE3D100KX04	55.9	3.883	1363/351	111
373	2.4	646	2.0	55	C202_0039 IE3D100KX04	59.9	3.888	486/125	111
430	2.7	745	2.2	47	C202_0034 IE3D100KX04	59.9	3.373	2250/667	112
435	1.8	753	1.5	47	C102_0033 IE3D100KX04	55.9	3.334	2067/620	111
469	1.8	813	1.6	43	C102_0031 IE3D100KX04	55.9	3.091	2491/806	111
467	2.8	809	2.4	44	C202_0031 IE3D100KX04	59.9	3.103	90/29	112
539	3.1	934	2.6	38	C202_0027 IE3D100KX04	59.9	2.690	495/184	113
562	2.1	973	1.8	36	C102_0026 IE3D100KX04	55.9	2.582	1911/740	111
586	3.3	1015	2.7	35	C202_0025 IE3D100KX04	59.9	2.475	99/40	113
606	2.2	1049	1.8	34	C102_0024 IE3D100KX04	55.9	2.394	2303/962	111
666	2.3	1154	2.0	31	C102_0022 IE3D100KX04	55.9	2.177	468/215	112
719	2.4	1245	2.1	28	C102_0020 IE3D100KX04	55.9	2.018	1128/559	112
742	2.5	–	–	27	C102_0039 IE3D090L02	34.4	3.883	1363/351	28
751	1.3	–	–	27	C002_0038 IE3D090L02	29.5	3.835	441/115	28
868	1.4	–	–	23	C002_0033 IE3D090L02	29.5	3.318	1702/513	28
864	2.8	–	–	24	C102_0033 IE3D090L02	34.4	3.334	2067/620	28
939	1.5	–	–	22	C002_0031 IE3D090L02	29.5	3.067	46/15	28
932	2.9	–	–	22	C102_0031 IE3D090L02	34.4	3.091	2491/806	29
1040	1.6	–	–	20	C002_0028 IE3D090L02	29.5	2.769	36/13	28
1323	3.3	–	–	15	C102_0022 IE3D090L02	34.4	2.177	468/215	29
1442	2.0	–	–	14	C002_0020 IE3D090L02	29.5	1.997	1480/741	28
1427	3.3	–	–	14	C102_0020 IE3D090L02	34.4	2.018	1128/559	29
P_N (50 Hz) = 3,00 kW, P_N (87 Hz) = 5,20 kW									
6.8	0.90	12	0.88	4015	C813_2120 IE3D100LX04	214.5	212.1	8272/39	131
8.1	1.1	14	1.0	3376	C813_1780 IE3D100LX04	214.5	178.4	6956/39	131
10	1.4	18	1.2	2620	C813_1380 IE3D100LX04	214.5	138.4	2491/18	132
11	0.96	19	0.84	2506	C713_1320 IE3D100LX04	155.5	132.4	33887/256	131
13	1.6	23	1.5	2036	C813_1080 IE3D100LX04	214.5	107.6	4841/45	132
15	1.3	25	1.1	1877	C713_0990 IE3D100LX04	155.5	99.14	6345/64	131
16	1.6	28	1.6	1719	C813_0910 IE3D100LX04	214.5	90.82	18800/207	133
18	1.5	31	1.2	1533	C713_0810 IE3D100LX04	155.5	80.97	20727/256	131

n_2 50 Hz [rpm]	S 50 Hz	n_2 87 Hz [rpm]	S 87 Hz	M_{2N} [Nm]	Type	m [kg]	i	i_{exakt}	J_1 [10^{-4}kgm²]
P_N (50 Hz) = 3,00 kW, P_N (87 Hz) = 5,20 kW									
18	1.6	32	1.5	1502	C813_0790 IE3D100LX04	214.5	79.34	285619/3600	132
19	1.0	33	1.0	1454	C613_0770 IE3D100LX04	115.5	76.80	8601/112	131
21	1.5	36	1.5	1336	C712_0700 IE3D100LX04	142.4	69.55	765/11	132
21	0.98	36	0.98	1323	C612_0690 IE3D100LX04	107.1	68.89	620/9	131
23	1.2	40	1.2	1201	C613_0630 IE3D100LX04	115.5	63.46	48739/768	131
26	1.8	44	1.8	1091	C712_0570 IE3D100LX04	142.4	56.82	625/11	133
26	1.2	46	1.2	1058	C612_0550 IE3D100LX04	107.1	55.11	496/9	132
29	0.84	50	0.84	957	C502_0500 IE3D100LX04	91.8	49.82	1943/39	131
29	1.6	51	1.5	933	C613_0490 IE3D100LX04	115.5	49.28	31537/640	131
31	0.89	54	0.89	897	C502_0470 IE3D100LX04	91.8	46.72	1495/32	131
32	1.5	55	1.5	871	C612_0450 IE3D100LX04	107.1	45.33	136/3	132
35	1.0	60	1.0	801	C502_0420 IE3D100LX04	91.8	41.69	667/16	131
35	1.8	61	1.8	788	C712_0410 IE3D100LX04	142.4	41.02	2625/64	133
37	1.6	64	1.6	757	C612_0390 IE3D100LX04	107.1	39.40	1891/48	132
42	0.82	72	0.82	669	C402_0350 IE3D100LX04	80.2	34.82	975/28	131
41	1.2	72	1.2	672	C502_0350 IE3D100LX04	91.8	35.00	35/1	132
42	1.9	72	1.9	670	C612_0350 IE3D100LX04	107.1	34.87	1360/39	134
41	2.3	72	2.3	673	C712_0350 IE3D100LX04	142.4	35.07	2700/77	138
45	1.8	78	1.8	622	C612_0320 IE3D100LX04	107.1	32.41	1037/32	132
47	0.92	81	0.92	598	C402_0310 IE3D100LX04	80.2	31.15	405/13	131
46	1.3	80	1.3	600	C502_0310 IE3D100LX04	91.8	31.23	406/13	132
52	1.0	90	1.0	535	C402_0280 IE3D100LX04	80.2	27.86	195/7	131
52	1.5	89	1.5	540	C502_0280 IE3D100LX04	91.8	28.10	5395/192	132
53	2.4	92	2.4	527	C612_0270 IE3D100LX04	107.1	27.43	192/7	135
58	1.1	101	1.1	479	C402_0250 IE3D100LX04	80.2	24.92	324/13	131
58	1.7	100	1.7	482	C502_0250 IE3D100LX04	91.8	25.07	2407/96	132
58	2.1	101	2.1	479	C612_0250 IE3D100LX04	107.1	24.93	5185/208	134
62	1.2	108	1.2	449	C402_0230 IE3D100LX04	80.2	23.36	1495/64	132
62	1.8	108	1.8	449	C502_0230 IE3D100LX04	91.8	23.36	1495/64	133
70	0.88	121	0.88	399	C302_0210 IE3D100LX04	70.0	20.80	104/5	131
69	1.4	120	1.4	401	C402_0210 IE3D100LX04	80.2	20.90	4347/208	132
70	2.0	120	2.0	400	C502_0210 IE3D100LX04	91.8	20.84	667/32	133
74	2.4	128	2.4	377	C612_0195 IE3D100LX04	107.1	19.61	549/28	135
83	1.0	143	1.0	337	C302_0175 IE3D100LX04	70.0	17.54	1105/63	131
82	1.6	143	1.6	338	C402_0175 IE3D100LX04	80.2	17.60	845/48	132
92	1.8	159	1.8	302	C402_0160 IE3D100LX04	80.2	15.75	63/4	133
93	1.2	162	1.2	299	C302_0155 IE3D100LX04	70.0	15.54	544/35	131
104	1.3	179	1.3	269	C302_0140 IE3D100LX04	70.0	13.99	2015/144	131
104	2.0	179	2.0	269	C402_0140 IE3D100LX04	80.2	13.99	2015/144	133
118	0.85	204	0.85	237	C202_0125 IE3D100LX04	64.9	12.32	665/54	131
117	1.5	203	1.4	238	C302_0125 IE3D100LX04	70.0	12.40	62/5	132
116	2.3	201	2.3	240	C402_0125 IE3D100LX04	80.2	12.52	651/52	133
123	0.89	214	0.89	226	C202_0120 IE3D100LX04	64.9	11.76	294/25	131
125	1.6	216	1.4	223	C302_0115 IE3D100LX04	70.0	11.61	325/28	132
125	2.5	216	2.4	223	C402_0115 IE3D100LX04	80.2	11.64	1885/162	134
141	1.0	245	0.99	197	C202_0105 IE3D100LX04	64.9	10.26	513/50	131
141	1.8	244	1.5	198	C302_0105 IE3D100LX04	70.0	10.29	72/7	132
139	2.8	241	2.6	200	C402_0105 IE3D100LX04	80.2	10.41	406/39	134
154	1.1	268	1.1	180	C202_0094 IE3D100LX04	64.9	9.387	2450/261	131
156	2.0	270	1.6	179	C302_0093 IE3D100LX04	70.0	9.310	3575/384	133
176	2.1	304	1.8	158	C302_0083 IE3D100LX04	70.0	8.250	33/4	133
177	1.3	307	1.2	157	C202_0082 IE3D100LX04	64.9	8.190	475/58	132
186	1.1	322	0.94	150	C202_0078 IE3D100LX04	64.9	7.800	39/5	131
185	1.8	320	1.5	151	C302_0078 IE3D100LX04	70.0	7.841	494/63	131
186	2.4	321	2.2	150	C402_0078 IE3D100LX04	80.2	7.816	2001/256	132
229	0.84	–	–	122	C102_0063 IE3D100LX04	60.9	6.338	507/80	130
230	1.3	399	1.1	121	C202_0063 IE3D100LX04	64.9	6.295	3330/529	131
230	2.1	398	1.8	121	C302_0063 IE3D100LX04	70.0	6.314	221/35	131
247	0.88	–	–	113	C102_0059 IE3D100LX04	60.9	5.875	47/8	130
247	2.2	429	1.9	113	C302_0059 IE3D100LX04	70.0	5.859	2584/441	131
250	1.4	434	1.1	111	C202_0058 IE3D100LX04	64.9	5.791	666/115	131
286	1.5	495	1.2	97	C202_0051 IE3D100LX04	64.9	5.072	350/69	131
289	0.98	500	0.82	97	C102_0050 IE3D100LX04	60.9	5.025	201/40	131
288	2.4	499	2.1	97	C302_0050 IE3D100LX04	70.0	5.038	403/80	132
311	1.0	539	0.87	89	C102_0047 IE3D100LX04	60.9	4.658	3149/676	131

n_2 50 Hz [rpm]	S 50 Hz	n_2 87 Hz [rpm]	S 87 Hz	M_{2N} [Nm]	Type	m [kg]	i	i_{exakt}	J_1 [10^{-4}kgm²]
P_N (50 Hz) = 3,00 kW, P_N (87 Hz) = 5,20 kW									
311	1.6	538	1.3	90	C202_0047 IE3D100LX04	64.9	4.667	14/3	131
310	2.6	537	2.2	90	C302_0047 IE3D100LX04	70.0	4.675	589/126	132
313	3.0	543	3.0	89	C502_0046 IE3D100LX04	91.8	4.629	162/35	138
346	1.1	600	0.93	80	C102_0042 IE3D100LX04	60.9	4.189	377/90	131
343	1.7	594	1.4	81	C202_0042 IE3D100LX04	64.9	4.226	486/115	131
347	2.8	601	2.3	80	C302_0042 IE3D100LX04	70.0	4.179	117/28	133
373	1.2	647	0.98	75	C102_0039 IE3D100LX04	60.9	3.883	1363/351	131
373	1.8	646	1.5	75	C202_0039 IE3D100LX04	64.9	3.888	486/125	131
374	2.9	648	2.4	74	C302_0039 IE3D100LX04	70.0	3.878	190/49	133
430	1.9	745	1.6	65	C202_0034 IE3D100LX04	64.9	3.373	2250/667	132
433	3.0	749	2.7	64	C302_0034 IE3D100LX04	70.0	3.352	429/128	133
435	1.3	753	1.1	64	C102_0033 IE3D100LX04	60.9	3.334	2067/620	131
469	1.4	813	1.1	59	C102_0031 IE3D100LX04	60.9	3.091	2491/806	131
467	2.1	809	1.7	60	C202_0031 IE3D100LX04	64.9	3.103	90/29	132
539	2.3	934	1.9	52	C202_0027 IE3D100LX04	64.9	2.690	495/184	133
562	1.5	973	1.3	50	C102_0026 IE3D100LX04	60.9	2.582	1911/740	131
586	2.4	1015	2.0	48	C202_0025 IE3D100LX04	64.9	2.475	99/40	133
606	1.6	1049	1.3	46	C102_0024 IE3D100LX04	60.9	2.394	2303/962	131
666	1.7	1154	1.4	42	C102_0022 IE3D100LX04	60.9	2.177	468/215	132
664	2.6	1150	2.2	42	C202_0022 IE3D100LX04	64.9	2.184	2160/989	134
719	1.8	1245	1.5	39	C102_0020 IE3D100LX04	60.9	2.018	1128/559	132
722	2.7	1250	2.3	39	C202_0020 IE3D100LX04	64.9	2.009	432/215	134
752	1.9	–	–	37	C102_0039 IE3D100L02	41.9	3.883	1363/351	46
751	2.9	–	–	37	C202_0039 IE3D100L02	45.9	3.888	486/125	46
866	3.1	–	–	32	C202_0034 IE3D100L02	45.9	3.373	2250/667	47
876	2.1	–	–	32	C102_0033 IE3D100L02	41.9	3.334	2067/620	46
945	2.2	–	–	29	C102_0031 IE3D100L02	41.9	3.091	2491/806	46
1086	3.7	–	–	26	C202_0027 IE3D100L02	45.9	2.690	495/184	48
1131	2.5	–	–	25	C102_0026 IE3D100L02	41.9	2.582	1911/740	46
1180	3.9	–	–	24	C202_0025 IE3D100L02	45.9	2.475	99/40	48
1220	2.6	–	–	23	C102_0024 IE3D100L02	41.9	2.394	2303/962	46
1341	2.8	–	–	21	C102_0022 IE3D100L02	41.9	2.177	468/215	47
1447	2.9	–	–	19	C102_0020 IE3D100L02	41.9	2.018	1128/559	47
P_N (50 Hz) = 4,00 kW, P_N (87 Hz) = 6,93 kW									
8.2	0.81	–	–	4450	C813_1780 IE3D112M04	220.5	178.4	6956/39	171
11	1.0	18	0.92	3453	C813_1380 IE3D112M04	220.5	138.4	2491/18	172
14	1.2	24	1.1	2684	C813_1080 IE3D112M04	220.5	107.6	4841/45	172
15	0.95	–	–	2474	C713_0990 IE3D112M04	161.5	99.14	6345/64	171
16	1.2	28	1.2	2266	C813_0910 IE3D112M04	220.5	90.82	18800/207	173
18	1.1	31	0.92	2020	C713_0810 IE3D112M04	161.5	80.97	20727/256	171
18	1.2	32	1.1	1980	C813_0790 IE3D112M04	220.5	79.34	285619/3600	172
21	1.1	36	1.1	1761	C712_0700 IE3D112M04	148.4	69.55	765/11	172
23	0.92	40	0.92	1583	C613_0630 IE3D112M04	121.5	63.46	48739/768	171
26	1.3	45	1.3	1438	C712_0570 IE3D112M04	148.4	56.82	625/11	173
27	0.93	46	0.93	1395	C612_0550 IE3D112M04	113.1	55.11	496/9	172
30	1.2	51	1.1	1230	C613_0490 IE3D112M04	121.5	49.28	31537/640	171
32	1.1	56	1.1	1148	C612_0450 IE3D112M04	113.1	45.33	136/3	172
36	1.3	62	1.3	1038	C712_0410 IE3D112M04	148.4	41.02	2625/64	173
37	1.2	64	1.2	997	C612_0390 IE3D112M04	113.1	39.40	1891/48	172
42	0.90	72	0.90	886	C502_0350 IE3D112M04	97.8	35.00	35/1	172
42	1.5	73	1.5	883	C612_0350 IE3D112M04	113.1	34.87	1360/39	174
42	1.8	72	1.8	888	C712_0350 IE3D112M04	148.4	35.07	2700/77	178
45	1.4	78	1.4	820	C612_0320 IE3D112M04	113.1	32.41	1037/32	172
47	1.0	81	1.0	791	C502_0310 IE3D112M04	97.8	31.23	406/13	172
52	1.1	90	1.1	711	C502_0280 IE3D112M04	97.8	28.10	5395/192	172
53	1.8	93	1.8	694	C612_0270 IE3D112M04	113.1	27.43	192/7	175
59	0.87	102	0.87	631	C402_0250 IE3D112M04	86.2	24.92	324/13	171
58	1.3	101	1.3	635	C502_0250 IE3D112M04	97.8	25.07	2407/96	172
59	1.6	102	1.6	631	C612_0250 IE3D112M04	113.1	24.93	5185/208	174
58	1.8	100	1.8	641	C712_0250 IE3D112M04	148.4	25.31	405/16	178
63	0.93	109	0.93	591	C402_0230 IE3D112M04	86.2	23.36	1495/64	172
63	1.4	109	1.4	591	C502_0230 IE3D112M04	97.8	23.36	1495/64	173
70	1.0	121	1.0	529	C402_0210 IE3D112M04	86.2	20.90	4347/208	172
70	1.5	122	1.5	528	C502_0210 IE3D112M04	97.8	20.84	667/32	173
75	1.8	129	1.8	496	C612_0195 IE3D112M04	113.1	19.61	549/28	175

n_2 50 Hz [rpm]	S 50 Hz	n_2 87 Hz [rpm]	S 87 Hz	M_{2N} [Nm]	Type	m [kg]	i	i_{exakt}	J_1 [10^{-4}kgm²]
P_N (50 Hz) = 4,00 kW, P_N (87 Hz) = 6,93 kW									
83	1.2	144	1.2	446	C402_0175 IE3D112M04	86.2	17.60	845/48	172
93	1.4	161	1.4	399	C402_0160 IE3D112M04	86.2	15.75	63/4	173
94	0.89	163	0.88	394	C302_0155 IE3D112M04	76.0	15.54	544/35	171
105	0.99	181	0.95	354	C302_0140 IE3D112M04	76.0	13.99	2015/144	171
105	1.6	181	1.6	354	C402_0140 IE3D112M04	86.2	13.99	2015/144	173
105	2.3	182	2.3	353	C502_0140 IE3D112M04	97.8	13.93	195/14	176
118	1.1	205	1.0	314	C302_0125 IE3D112M04	76.0	12.40	62/5	172
117	1.7	203	1.7	317	C402_0125 IE3D112M04	86.2	12.52	651/52	173
118	2.3	204	2.3	315	C502_0125 IE3D112M04	97.8	12.43	87/7	176
126	1.2	219	1.1	294	C302_0115 IE3D112M04	76.0	11.61	325/28	172
126	1.9	218	1.8	295	C402_0115 IE3D112M04	86.2	11.64	1885/162	174
142	1.3	247	1.2	260	C302_0105 IE3D112M04	76.0	10.29	72/7	172
141	2.1	244	1.9	264	C402_0105 IE3D112M04	86.2	10.41	406/39	174
156	0.84	–	–	238	C202_0094 IE3D112M04	70.9	9.387	2450/261	171
157	1.5	273	1.2	236	C302_0093 IE3D112M04	76.0	9.310	3575/384	173
178	1.6	308	1.3	209	C302_0083 IE3D112M04	76.0	8.250	33/4	173
179	0.97	310	0.87	207	C202_0082 IE3D112M04	70.9	8.190	475/58	172
188	0.84	–	–	197	C202_0078 IE3D112M04	70.9	7.800	39/5	171
187	1.4	324	1.2	199	C302_0078 IE3D112M04	76.0	7.841	494/63	171
187	1.8	325	1.7	198	C402_0078 IE3D112M04	86.2	7.816	2001/256	172
189	2.0	327	2.0	197	C502_0078 IE3D112M04	97.8	7.763	621/80	174
233	0.97	403	0.82	159	C202_0063 IE3D112M04	70.9	6.295	3330/529	171
232	1.6	402	1.3	160	C302_0063 IE3D112M04	76.0	6.314	221/35	171
250	1.7	433	1.4	148	C302_0059 IE3D112M04	76.0	5.859	2584/441	171
249	2.1	431	2.0	149	C402_0059 IE3D112M04	86.2	5.891	377/64	173
253	1.0	438	0.86	147	C202_0058 IE3D112M04	70.9	5.791	666/115	171
289	1.1	500	0.94	128	C202_0051 IE3D112M04	70.9	5.072	350/69	171
291	1.8	504	1.6	128	C302_0050 IE3D112M04	76.0	5.038	403/80	172
314	1.2	544	1.0	118	C202_0047 IE3D112M04	70.9	4.667	14/3	171
313	1.9	543	1.6	118	C302_0047 IE3D112M04	76.0	4.675	589/126	172
313	2.3	542	2.3	119	C402_0047 IE3D112M04	86.2	4.682	899/192	175
316	2.3	548	2.3	117	C502_0046 IE3D112M04	97.8	4.629	162/35	178
350	0.84	–	–	106	C102_0042 IE3D112M04	66.9	4.189	377/90	171
347	1.3	600	1.1	107	C202_0042 IE3D112M04	70.9	4.226	486/115	171
351	2.1	607	1.8	106	C302_0042 IE3D112M04	76.0	4.179	117/28	173
377	0.88	–	–	98	C102_0039 IE3D112M04	66.9	3.883	1363/351	171
377	1.3	653	1.1	98	C202_0039 IE3D112M04	70.9	3.888	486/125	171
378	2.2	654	1.8	98	C302_0039 IE3D112M04	76.0	3.878	190/49	173
434	1.5	752	1.2	85	C202_0034 IE3D112M04	70.9	3.373	2250/667	172
437	2.3	757	2.0	85	C302_0034 IE3D112M04	76.0	3.352	429/128	173
439	0.97	761	0.82	84	C102_0033 IE3D112M04	66.9	3.334	2067/620	171
474	1.0	821	0.86	78	C102_0031 IE3D112M04	66.9	3.091	2491/806	171
472	1.6	818	1.3	79	C202_0031 IE3D112M04	70.9	3.103	90/29	172
471	2.3	816	2.1	79	C302_0031 IE3D112M04	76.0	3.110	1045/336	174
545	1.7	943	1.4	68	C202_0027 IE3D112M04	70.9	2.690	495/184	173
567	1.2	983	0.97	65	C102_0026 IE3D112M04	66.9	2.582	1911/740	171
592	1.8	1025	1.5	63	C202_0025 IE3D112M04	70.9	2.475	99/40	173
612	1.2	1060	1.0	61	C102_0024 IE3D112M04	66.9	2.394	2303/962	171
673	1.3	1166	1.1	55	C102_0022 IE3D112M04	66.9	2.177	468/215	172
671	2.0	1162	1.7	55	C202_0022 IE3D112M04	70.9	2.184	2160/989	174
726	1.4	1257	1.1	51	C102_0020 IE3D112M04	66.9	2.018	1128/559	172
729	2.1	1263	1.7	51	C202_0020 IE3D112M04	70.9	2.009	432/215	174
752	1.4	–	–	49	C102_0039 IE3D112M02	48.9	3.883	1363/351	56
751	2.1	–	–	49	C202_0039 IE3D112M02	52.9	3.888	486/125	56
866	2.4	–	–	43	C202_0034 IE3D112M02	52.9	3.373	2250/667	57
876	1.6	–	–	42	C102_0033 IE3D112M02	48.9	3.334	2067/620	56
945	1.6	–	–	39	C102_0031 IE3D112M02	48.9	3.091	2491/806	56
941	2.5	–	–	39	C202_0031 IE3D112M02	52.9	3.103	90/29	57
1086	2.7	–	–	34	C202_0027 IE3D112M02	52.9	2.690	495/184	58
1131	1.8	–	–	33	C102_0026 IE3D112M02	48.9	2.582	1911/740	56
1180	2.9	–	–	31	C202_0025 IE3D112M02	52.9	2.475	99/40	58
1220	1.9	–	–	30	C102_0024 IE3D112M02	48.9	2.394	2303/962	56
1341	2.1	–	–	28	C102_0022 IE3D112M02	48.9	2.177	468/215	57
1447	2.2	–	–	26	C102_0020 IE3D112M02	48.9	2.018	1128/559	57

n_2 50 Hz [rpm]	S 50 Hz	n_2 87 Hz [rpm]	S 87 Hz	M_{2N} [Nm]	Type	m [kg]	i	i_{exakt}	J_1 [10^{-4}kgm²]
P_N (50 Hz) = 5,50 kW, P_N (87 Hz) = 9,53 kW									
6.9	0.83	12	0.83	7206	C913_2150 IE3D132S04	361.3	215.4	3015/14	353
8.4	1.0	15	1.0	5892	C913_1760 IE3D132S04	361.3	176.1	34515/196	354
11	0.97	20	0.94	4334	C813_1300 IE3D132S04	254.5	129.5	58941/455	352
13	1.6	23	1.6	3695	C913_1100 IE3D132S04	361.3	110.4	21645/196	356
14	1.0	24	1.0	3545	C813_1060 IE3D132S04	254.5	105.9	3708/35	353
15	1.2	26	1.1	3363	C813_1010 IE3D132S04	254.5	100.5	28143/280	353
17	1.2	29	1.2	2993	C813_0890 IE3D132S04	254.5	89.44	14400/161	354
19	0.90	32	0.90	2668	C713_0800 IE3D132S04	195.5	79.73	5103/64	352
19	1.6	33	1.4	2614	C813_0780 IE3D132S04	254.5	78.13	54693/700	353
19	1.9	33	1.6	2601	C913_0780 IE3D132S04	361.3	77.73	60939/784	356
21	1.5	37	1.5	2339	C812_0690 IE3D132S04	242.0	68.89	620/9	356
22	1.9	39	1.6	2207	C813_0660 IE3D132S04	254.5	65.96	10620/161	354
23	1.1	40	1.1	2160	C713_0650 IE3D132S04	195.5	64.55	4131/64	353
26	1.0	45	1.0	1929	C712_0570 IE3D132S04	182.4	56.82	625/11	353
27	2.0	47	2.0	1839	C812_0540 IE3D132S04	242.0	54.15	704/13	359
29	1.4	50	1.4	1701	C713_0510 IE3D132S04	195.5	50.85	18711/368	353
30	2.3	52	2.0	1645	C813_0490 IE3D132S04	254.5	49.18	49914/1015	355
32	1.3	55	1.3	1589	C712_0470 IE3D132S04	182.4	46.82	515/11	355
33	2.3	56	2.3	1546	C812_0460 IE3D132S04	242.0	45.54	592/13	362
33	0.85	57	0.85	1539	C612_0450 IE3D132S04	147.1	45.33	136/3	352
36	1.5	62	1.5	1392	C712_0410 IE3D132S04	182.4	41.02	2625/64	353
37	2.7	64	2.7	1356	C812_0400 IE3D132S04	242.0	39.94	2596/65	359
42	1.1	74	1.1	1184	C612_0350 IE3D132S04	147.1	34.87	1360/39	354
42	1.7	73	1.7	1190	C712_0350 IE3D132S04	182.4	35.07	2700/77	358
42	3.0	73	3.0	1200	C812_0350 IE3D132S04	242.0	35.33	106/3	368
44	2.1	76	2.1	1147	C712_0340 IE3D132S04	182.4	33.80	2163/64	355
46	1.3	79	1.3	1100	C612_0320 IE3D132S04	147.1	32.41	1037/32	352
52	2.1	90	2.1	972	C712_0290 IE3D132S04	182.4	28.64	315/11	360
53	0.84	91	0.84	954	C502_0280 IE3D132S04	131.8	28.10	5395/192	352
54	1.4	93	1.4	931	C612_0270 IE3D132S04	147.1	27.43	192/7	355
54	3.6	93	3.6	933	C812_0270 IE3D132S04	242.0	27.47	412/15	376
57	3.1	98	3.1	885	C812_0260 IE3D132S04	242.0	26.06	3127/120	368
59	0.94	102	0.94	851	C502_0250 IE3D132S04	131.8	25.07	2407/96	352
59	1.7	103	1.7	846	C612_0250 IE3D132S04	147.1	24.93	5185/208	354
58	2.8	101	2.7	859	C712_0250 IE3D132S04	182.4	25.31	405/16	358
63	1.0	110	1.0	793	C502_0230 IE3D132S04	131.8	23.36	1495/64	353
65	1.7	113	1.7	770	C612_0230 IE3D132S04	147.1	22.67	68/3	357
64	2.5	111	2.5	787	C712_0230 IE3D132S04	182.4	23.18	255/11	364
71	1.1	123	1.1	708	C502_0210 IE3D132S04	131.8	20.84	667/32	353
72	3.2	124	3.1	702	C712_0210 IE3D132S04	182.4	20.67	1323/64	361
73	3.6	127	3.6	688	C812_0200 IE3D132S04	242.0	20.26	6077/300	377
75	2.2	131	2.0	666	C612_0195 IE3D132S04	147.1	19.61	549/28	355
81	3.2	140	3.2	620	C712_0185 IE3D132S04	182.4	18.26	420/23	371
84	0.92	146	0.92	598	C402_0175 IE3D132S04	120.2	17.60	845/48	352
84	1.3	146	1.3	598	C502_0175 IE3D132S04	131.8	17.60	845/48	355
84	2.2	146	2.1	598	C612_0175 IE3D132S04	147.1	17.60	88/5	360
87	3.9	150	3.9	581	C812_0170 IE3D132S04	242.0	17.10	1180/69	385
88	3.8	153	3.6	568	C712_0165 IE3D132S04	182.4	16.73	1071/64	365
94	1.0	163	1.0	535	C402_0160 IE3D132S04	120.2	15.75	63/4	353
91	2.6	158	2.2	550	C612_0160 IE3D132S04	147.1	16.20	1037/64	357
94	1.5	163	1.5	533	C502_0155 IE3D132S04	131.8	15.71	377/24	355
106	1.2	183	1.2	475	C402_0140 IE3D132S04	120.2	13.99	2015/144	353
106	1.7	184	1.7	473	C502_0140 IE3D132S04	131.8	13.93	195/14	356
105	2.7	181	2.4	480	C612_0140 IE3D132S04	147.1	14.15	976/69	364
108	4.3	187	4.1	466	C712_0135 IE3D132S04	182.4	13.73	4380/319	380
112	4.1	194	4.1	448	C712_0130 IE3D132S04	182.4	13.18	4851/368	372
119	0.83	–	–	421	C302_0125 IE3D132S04	110.0	12.40	62/5	352
118	1.3	205	1.3	425	C402_0125 IE3D132S04	120.2	12.52	651/52	353
119	1.9	206	1.9	422	C502_0125 IE3D132S04	131.8	12.43	87/7	356
118	3.1	204	2.6	427	C612_0125 IE3D132S04	147.1	12.58	2013/160	361
128	0.89	–	–	394	C302_0115 IE3D132S04	110.0	11.61	325/28	352
127	1.4	220	1.3	395	C402_0115 IE3D132S04	120.2	11.64	1885/162	354
127	2.0	220	2.0	395	C502_0115 IE3D132S04	131.8	11.64	1885/162	358
144	1.0	249	0.87	349	C302_0105 IE3D132S04	110.0	10.29	72/7	352
142	1.6	246	1.4	353	C402_0105 IE3D132S04	120.2	10.41	406/39	354

n_2 50 Hz [rpm]	S 50 Hz	n_2 87 Hz [rpm]	S 87 Hz	M_{2N} [Nm]	Type	m [kg]	i	i_{exakt}	J_1 [10^{-4}kgm²]
P_N (50 Hz) = 5,50 kW, P_N (87 Hz) = 9,53 kW									
143	2.3	247	2.2	353	C502_0105 IE3D132S04	131.8	10.38	841/81	358
146	3.6	254	3.0	343	C612_0100 IE3D132S04	147.1	10.11	3721/368	365
149	4.6	259	4.6	337	C712_0099 IE3D132S04	182.4	9.912	4599/464	381
159	1.1	275	0.92	316	C302_0093 IE3D132S04	110.0	9.310	3575/384	353
160	1.7	277	1.6	314	C402_0093 IE3D132S04	120.2	9.261	3445/372	356
160	2.5	277	2.3	314	C502_0093 IE3D132S04	131.8	9.261	3445/372	361
162	3.9	281	3.2	310	C612_0091 IE3D132S04	147.1	9.118	848/93	373
179	1.2	311	1.0	280	C302_0083 IE3D132S04	110.0	8.250	33/4	353
179	2.0	309	1.7	281	C402_0083 IE3D132S04	120.2	8.285	3339/403	356
179	2.9	310	2.5	281	C502_0083 IE3D132S04	131.8	8.263	1537/186	361
181	4.2	313	3.5	278	C612_0082 IE3D132S04	147.1	8.190	1769/216	369
189	1.0	327	0.86	266	C302_0078 IE3D132S04	110.0	7.841	494/63	351
189	1.5	328	1.3	265	C402_0078 IE3D132S04	120.2	7.816	2001/256	352
191	2.3	330	1.9	264	C502_0078 IE3D132S04	131.8	7.763	621/80	354
227	4.6	393	4.1	221	C612_0065 IE3D132S04	147.1	6.518	3233/496	376
234	1.2	406	0.99	214	C302_0063 IE3D132S04	110.0	6.314	221/35	351
253	1.2	438	1.0	199	C302_0059 IE3D132S04	110.0	5.859	2584/441	351
251	1.8	435	1.5	200	C402_0059 IE3D132S04	120.2	5.891	377/64	353
253	2.8	438	2.4	199	C502_0059 IE3D132S04	131.8	5.850	117/20	356
294	1.4	509	1.2	171	C302_0050 IE3D132S04	110.0	5.038	403/80	352
317	1.4	548	1.2	159	C302_0047 IE3D132S04	110.0	4.675	589/126	352
316	2.1	548	1.8	159	C402_0047 IE3D132S04	120.2	4.682	899/192	355
320	3.3	554	2.8	157	C502_0046 IE3D132S04	131.8	4.629	162/35	358
354	1.6	613	1.3	142	C302_0042 IE3D132S04	110.0	4.179	117/28	353
382	1.6	661	1.4	132	C302_0039 IE3D132S04	110.0	3.878	190/49	353
380	2.4	658	2.0	132	C402_0039 IE3D132S04	120.2	3.894	841/216	356
442	1.8	765	1.5	114	C302_0034 IE3D132S04	110.0	3.352	429/128	353
476	1.9	824	1.6	106	C302_0031 IE3D132S04	110.0	3.110	1045/336	354
478	2.8	827	2.3	105	C402_0031 IE3D132S04	120.2	3.099	1537/496	358
547	2.1	948	1.7	92	C302_0027 IE3D132S04	110.0	2.705	1677/620	355
590	2.2	1021	1.8	85	C302_0025 IE3D132S04	110.0	2.510	1634/651	355
680	2.4	1178	2.0	74	C302_0022 IE3D132S04	110.0	2.177	468/215	357
733	2.5	1269	2.1	69	C302_0020 IE3D132S04	110.0	2.020	608/301	357
P_N (50 Hz) = 7,50 kW, P_N (87 Hz) = 12,99 kW									
13	1.2	23	1.1	5173	C913_1100 IE3D132M04	371.3	110.4	21645/196	436
15	0.89	25	0.82	4708	C813_1010 IE3D132M04	264.5	100.5	28143/280	433
16	0.86	29	0.86	4190	C813_0890 IE3D132M04	264.5	89.44	14400/161	434
19	1.1	33	1.0	3660	C813_0780 IE3D132M04	264.5	78.13	54693/700	433
19	1.4	33	1.1	3641	C913_0780 IE3D132M04	371.3	77.73	60939/784	436
21	1.1	37	1.1	3274	C812_0690 IE3D132M04	252.0	68.89	620/9	436
22	1.4	39	1.1	3090	C813_0660 IE3D132M04	264.5	65.96	10620/161	434
27	1.4	47	1.4	2574	C812_0540 IE3D132M04	252.0	54.15	704/13	439
29	1.0	50	1.0	2382	C713_0510 IE3D132M04	205.5	50.85	18711/368	433
30	1.6	52	1.4	2304	C813_0490 IE3D132M04	264.5	49.18	49914/1015	435
32	0.90	55	0.90	2225	C712_0470 IE3D132M04	192.4	46.82	515/11	435
32	1.7	56	1.7	2164	C812_0460 IE3D132M04	252.0	45.54	592/13	442
36	1.1	62	1.1	1949	C712_0410 IE3D132M04	192.4	41.02	2625/64	433
37	1.9	64	1.9	1898	C812_0400 IE3D132M04	252.0	39.94	2596/65	439
42	1.2	73	1.2	1667	C712_0350 IE3D132M04	192.4	35.07	2700/77	438
42	2.1	72	2.1	1679	C812_0350 IE3D132M04	252.0	35.33	106/3	448
44	1.5	76	1.5	1606	C712_0340 IE3D132M04	192.4	33.80	2163/64	435
44	1.9	76	1.9	1596	C812_0340 IE3D132M04	252.0	33.59	2183/65	442
46	0.94	79	0.94	1540	C612_0320 IE3D132M04	157.1	32.41	1037/32	432
52	1.5	89	1.5	1361	C712_0290 IE3D132M04	192.4	28.64	315/11	440
54	1.0	93	1.0	1304	C612_0270 IE3D132M04	157.1	27.43	192/7	435
54	2.6	93	2.6	1306	C812_0270 IE3D132M04	252.0	27.47	412/15	456
57	2.2	98	2.2	1239	C812_0260 IE3D132M04	252.0	26.06	3127/120	448
59	1.2	102	1.2	1185	C612_0250 IE3D132M04	157.1	24.93	5185/208	434
58	2.0	101	1.9	1203	C712_0250 IE3D132M04	192.4	25.31	405/16	438
65	1.2	113	1.2	1077	C612_0230 IE3D132M04	157.1	22.67	68/3	437
64	1.8	110	1.8	1102	C712_0230 IE3D132M04	192.4	23.18	255/11	444
64	2.8	110	2.8	1102	C812_0230 IE3D132M04	252.0	23.19	1600/69	464
71	0.81	123	0.81	991	C502_0210 IE3D132M04	141.8	20.84	667/32	433
71	2.3	124	2.2	983	C712_0210 IE3D132M04	192.4	20.67	1323/64	441
73	2.6	126	2.6	963	C812_0200 IE3D132M04	252.0	20.26	6077/300	457

n_2 50 Hz [rpm]	S 50 Hz	n_2 87 Hz [rpm]	S 87 Hz	M_{2N} [Nm]	Type	m [kg]	i	i_{exakt}	J_1 [10^{-4}kgm²]
P_N (50 Hz) = 7,50 kW, P_N (87 Hz) = 12,99 kW									
75	1.6	130	1.4	932	C612_0195 IE3D132M04	157.1	19.61	549/28	435
81	2.3	140	2.3	868	C712_0185 IE3D132M04	192.4	18.26	420/23	451
84	0.96	145	0.96	837	C502_0175 IE3D132M04	141.8	17.60	845/48	435
84	1.6	145	1.5	837	C612_0175 IE3D132M04	157.1	17.60	88/5	440
85	3.2	148	3.2	822	C812_0175 IE3D132M04	252.0	17.29	1504/87	481
86	2.8	149	2.8	813	C812_0170 IE3D132M04	252.0	17.10	1180/69	465
88	2.7	153	2.6	795	C712_0165 IE3D132M04	192.4	16.73	1071/64	445
91	1.9	158	1.6	770	C612_0160 IE3D132M04	157.1	16.20	1037/64	437
94	1.1	163	1.1	747	C502_0155 IE3D132M04	141.8	15.71	377/24	435
105	0.83	183	0.83	665	C402_0140 IE3D132M04	130.2	13.99	2015/144	433
106	1.2	183	1.2	662	C502_0140 IE3D132M04	141.8	13.93	195/14	436
104	1.9	181	1.7	672	C612_0140 IE3D132M04	157.1	14.15	976/69	444
107	3.1	186	2.9	653	C712_0135 IE3D132M04	192.4	13.73	4380/319	460
112	2.9	194	2.9	627	C712_0130 IE3D132M04	192.4	13.18	4851/368	452
118	0.92	204	0.91	595	C402_0125 IE3D132M04	130.2	12.52	651/52	433
119	1.4	206	1.4	591	C502_0125 IE3D132M04	141.8	12.43	87/7	436
117	2.2	203	1.9	598	C612_0125 IE3D132M04	157.1	12.58	2013/160	441
127	0.99	220	0.96	553	C402_0115 IE3D132M04	130.2	11.64	1885/162	434
127	1.4	220	1.4	553	C502_0115 IE3D132M04	141.8	11.64	1885/162	438
129	2.4	223	2.0	545	C612_0115 IE3D132M04	157.1	11.46	928/81	448
142	1.1	245	1.0	495	C402_0105 IE3D132M04	130.2	10.41	406/39	434
142	1.6	246	1.5	494	C502_0105 IE3D132M04	141.8	10.38	841/81	438
146	2.6	253	2.2	481	C612_0100 IE3D132M04	157.1	10.11	3721/368	445
149	3.3	258	3.3	471	C712_0099 IE3D132M04	192.4	9.912	4599/464	461
159	1.3	276	1.1	440	C402_0093 IE3D132M04	130.2	9.261	3445/372	436
159	1.8	276	1.7	440	C502_0093 IE3D132M04	141.8	9.261	3445/372	441
162	2.8	280	2.3	433	C612_0091 IE3D132M04	157.1	9.118	848/93	453
179	0.86	–	–	392	C302_0083 IE3D132M04	120.0	8.250	33/4	433
178	1.4	308	1.2	394	C402_0083 IE3D132M04	130.2	8.285	3339/403	436
179	2.0	309	1.8	393	C502_0083 IE3D132M04	141.8	8.263	1537/186	441
180	3.0	312	2.5	389	C612_0082 IE3D132M04	157.1	8.190	1769/216	449
189	1.1	327	0.90	371	C402_0078 IE3D132M04	130.2	7.816	2001/256	432
190	1.7	329	1.4	369	C502_0078 IE3D132M04	141.8	7.763	621/80	434
226	3.3	392	2.9	310	C612_0065 IE3D132M04	157.1	6.518	3233/496	456
234	0.85	–	–	300	C302_0063 IE3D132M04	120.0	6.314	221/35	431
252	0.89	–	–	278	C302_0059 IE3D132M04	120.0	5.859	2584/441	431
250	1.3	434	1.1	280	C402_0059 IE3D132M04	130.2	5.891	377/64	433
252	2.0	437	1.7	278	C502_0059 IE3D132M04	141.8	5.850	117/20	436
293	0.98	507	0.82	239	C302_0050 IE3D132M04	120.0	5.038	403/80	432
316	1.0	546	0.87	222	C302_0047 IE3D132M04	120.0	4.675	589/126	432
315	1.5	546	1.3	223	C402_0047 IE3D132M04	130.2	4.682	899/192	435
319	2.3	552	2.0	220	C502_0046 IE3D132M04	141.8	4.629	162/35	438
353	1.1	611	0.93	199	C302_0042 IE3D132M04	120.0	4.179	117/28	433
380	1.2	659	0.98	184	C302_0039 IE3D132M04	120.0	3.878	190/49	433
379	1.7	656	1.4	185	C402_0039 IE3D132M04	130.2	3.894	841/216	436
381	2.6	661	2.2	184	C502_0039 IE3D132M04	141.8	3.867	58/15	441
440	1.3	762	1.1	159	C302_0034 IE3D132M04	120.0	3.352	429/128	433
474	1.4	821	1.1	148	C302_0031 IE3D132M04	120.0	3.110	1045/336	434
476	2.0	824	1.7	147	C402_0031 IE3D132M04	130.2	3.099	1537/496	438
479	3.1	830	2.6	146	C502_0031 IE3D132M04	141.8	3.077	477/155	445
545	1.5	944	1.2	129	C302_0027 IE3D132M04	120.0	2.705	1677/620	435
588	1.6	1018	1.3	119	C302_0025 IE3D132M04	120.0	2.510	1634/651	435
601	2.3	–	–	117	C402_0025 IE3D132M04	130.2	2.456	609/248	442
678	1.7	1174	1.4	103	C302_0022 IE3D132M04	120.0	2.177	468/215	437
730	1.8	1265	1.5	96	C302_0020 IE3D132M04	120.0	2.020	608/301	437
749	2.7	–	–	94	C402_0020 IE3D132M04	130.2	1.968	551/280	447
P_N (50 Hz) = 11,00 kW, P_N (87 Hz) = 19,05 kW									
12	0.82	20	0.82	8557	C913_1260 IE3D160M04	396.3	126.1	183549/1456	785
15	1.0	26	1.0	6748	C913_0990 IE3D160M04	396.3	99.42	20679/208	786
16	0.96	28	0.96	6228	C913_0920 IE3D160M04	396.3	91.76	8075/88	788
19	1.3	32	1.2	5366	C913_0790 IE3D160M04	396.3	79.06	115107/1456	787
21	1.1	37	1.1	4818	C912_0700 IE3D160M04	367.4	69.97	10075/144	793
23	1.6	40	1.4	4384	C913_0650 IE3D160M04	396.3	64.59	295545/4576	788
26	1.2	46	1.2	3845	C912_0560 IE3D160M04	367.4	55.83	335/6	799
27	0.97	47	0.97	3730	C812_0540 IE3D160M04	277.0	54.15	704/13	789

n_2 50 Hz [rpm]	S 50 Hz	n_2 87 Hz [rpm]	S 87 Hz	M_{2N} [Nm]	Type	m [kg]	i	i_{exakt}	J_1 [10^{-4}kgm²]
P_N (50 Hz) = 11,00 kW, P_N (87 Hz) = 19,05 kW									
32	1.1	56	1.1	3136	C812_0460 IE3D160M04	277.0	45.54	592/13	792
37	1.3	64	1.3	2751	C812_0400 IE3D160M04	277.0	39.94	2596/65	789
38	1.2	65	1.2	2706	C912_0390 IE3D160M04	367.4	39.30	4087/104	800
42	0.83	73	0.83	2415	C712_0350 IE3D160M04	217.4	35.07	2700/77	788
42	1.5	72	1.5	2433	C812_0350 IE3D160M04	277.0	35.33	106/3	798
44	1.0	76	1.0	2328	C712_0340 IE3D160M04	217.4	33.80	2163/64	785
44	1.3	76	1.3	2313	C812_0340 IE3D160M04	277.0	33.59	2183/65	792
52	1.0	89	1.0	1972	C712_0290 IE3D160M04	217.4	28.64	315/11	790
54	1.8	93	1.8	1892	C812_0270 IE3D160M04	277.0	27.47	412/15	806
57	1.5	98	1.5	1795	C812_0260 IE3D160M04	277.0	26.06	3127/120	798
59	0.85	102	0.82	1717	C612_0250 IE3D160M04	182.1	24.93	5185/208	784
58	1.4	101	1.3	1743	C712_0250 IE3D160M04	217.4	25.31	405/16	788
65	0.83	113	0.83	1561	C612_0230 IE3D160M04	182.1	22.67	68/3	787
64	1.3	110	1.3	1597	C712_0230 IE3D160M04	217.4	23.18	255/11	794
64	1.9	110	1.9	1597	C812_0230 IE3D160M04	277.0	23.19	1600/69	814
71	1.6	124	1.5	1424	C712_0210 IE3D160M04	217.4	20.67	1323/64	791
73	1.8	126	1.8	1395	C812_0200 IE3D160M04	277.0	20.26	6077/300	807
75	1.1	130	0.96	1350	C612_0195 IE3D160M04	182.1	19.61	549/28	785
81	1.6	140	1.6	1258	C712_0185 IE3D160M04	217.4	18.26	420/23	801
84	1.1	145	1.0	1212	C612_0175 IE3D160M04	182.1	17.60	88/5	790
85	2.2	148	2.2	1191	C812_0175 IE3D160M04	277.0	17.29	1504/87	831
86	1.9	149	1.9	1178	C812_0170 IE3D160M04	277.0	17.10	1180/69	815
88	1.9	153	1.8	1152	C712_0165 IE3D160M04	217.4	16.73	1071/64	795
91	1.3	158	1.1	1116	C612_0160 IE3D160M04	182.1	16.20	1037/64	787
106	0.83	183	0.83	959	C502_0140 IE3D160M04	166.8	13.93	195/14	786
104	1.3	181	1.2	974	C612_0140 IE3D160M04	182.1	14.15	976/69	794
107	2.1	186	2.0	946	C712_0135 IE3D160M04	217.4	13.73	4380/319	810
112	2.0	194	2.0	908	C712_0130 IE3D160M04	217.4	13.18	4851/368	802
119	0.94	206	0.94	856	C502_0125 IE3D160M04	166.8	12.43	87/7	786
117	1.5	203	1.3	866	C612_0125 IE3D160M04	182.1	12.58	2013/160	791
116	2.2	200	2.2	878	C812_0125 IE3D160M04	277.0	12.75	5546/435	834
127	1.0	220	0.99	801	C502_0115 IE3D160M04	166.8	11.64	1885/162	788
129	1.6	223	1.4	789	C612_0115 IE3D160M04	182.1	11.46	928/81	798
142	1.1	246	1.1	715	C502_0105 IE3D160M04	166.8	10.38	841/81	788
146	1.8	253	1.5	696	C612_0100 IE3D160M04	182.1	10.11	3721/368	795
149	2.3	258	2.3	683	C712_0099 IE3D160M04	217.4	9.912	4599/464	811
159	1.3	276	1.2	638	C502_0093 IE3D160M04	166.8	9.261	3445/372	791
162	1.9	280	1.6	628	C612_0091 IE3D160M04	182.1	9.118	848/93	803
179	1.4	309	1.2	569	C502_0083 IE3D160M04	166.8	8.263	1537/186	791
180	2.1	312	1.7	564	C612_0082 IE3D160M04	182.1	8.190	1769/216	799
190	1.1	329	0.96	535	C502_0078 IE3D160M04	166.8	7.763	621/80	784
226	2.3	392	2.0	449	C612_0065 IE3D160M04	182.1	6.518	3233/496	806
252	1.4	437	1.2	403	C502_0059 IE3D160M04	166.8	5.850	117/20	786
319	1.6	552	1.4	319	C502_0046 IE3D160M04	166.8	4.629	162/35	788
381	1.8	661	1.5	266	C502_0039 IE3D160M04	166.8	3.867	58/15	791
479	2.1	830	1.8	212	C502_0031 IE3D160M04	166.8	3.077	477/155	795
746	2.3	–	–	136	C502_0020 IE3D160M04	166.8	1.976	81/41	810
P_N (50 Hz) = 15,00 kW, P_N (87 Hz) = 25,98 kW									
19	0.97	33	0.91	7256	C913_0790 IE3D160L04	446.3	79.06	115107/1456	1574
21	0.85	37	0.85	6515	C912_0700 IE3D160L04	417.4	69.97	10075/144	1580
23	1.2	40	1.1	5927	C913_0650 IE3D160L04	446.3	64.59	295545/4576	1575
27	0.90	46	0.90	5199	C912_0560 IE3D160L04	417.4	55.83	335/6	1586
33	0.85	57	0.85	4240	C812_0460 IE3D160L04	327.0	45.54	592/13	1579
37	0.99	65	0.99	3719	C812_0400 IE3D160L04	327.0	39.94	2596/65	1576
38	0.90	66	0.90	3659	C912_0390 IE3D160L04	417.4	39.30	4087/104	1587
42	1.1	73	1.1	3290	C812_0350 IE3D160L04	327.0	35.33	106/3	1585
44	0.99	77	0.99	3127	C812_0340 IE3D160L04	327.0	33.59	2183/65	1579
54	1.3	94	1.3	2558	C812_0270 IE3D160L04	327.0	27.47	412/15	1593
57	1.1	99	1.1	2427	C812_0260 IE3D160L04	327.0	26.06	3127/120	1585
59	1.0	102	0.99	2357	C712_0250 IE3D160L04	267.4	25.31	405/16	1575
64	0.93	111	0.93	2159	C712_0230 IE3D160L04	267.4	23.18	255/11	1581
64	1.4	111	1.4	2159	C812_0230 IE3D160L04	327.0	23.19	1600/69	1601
72	1.2	125	1.1	1925	C712_0210 IE3D160L04	267.4	20.67	1323/64	1578
74	1.3	127	1.3	1886	C812_0200 IE3D160L04	327.0	20.26	6077/300	1594
82	1.2	141	1.2	1700	C712_0185 IE3D160L04	267.4	18.26	420/23	1588

n_2 50 Hz [rpm]	S 50 Hz	n_2 87 Hz [rpm]	S 87 Hz	M_{2N} [Nm]	Type	m [kg]	i	i_{exakt}	J_1 [10^{-4}kgm²]
P_N (50 Hz) = 15,00 kW, P_N (87 Hz) = 25,98 kW									
86	1.6	149	1.6	1610	C812_0175 IE3D160L04	327.0	17.29	1504/87	1618
87	1.4	151	1.4	1592	C812_0170 IE3D160L04	327.0	17.10	1180/69	1602
89	1.4	154	1.3	1558	C712_0165 IE3D160L04	267.4	16.73	1071/64	1582
92	0.96	159	0.81	1509	C612_0160 IE3D160L04	232.1	16.20	1037/64	1574
105	0.99	182	0.88	1317	C612_0140 IE3D160L04	232.1	14.15	976/69	1581
109	1.6	188	1.5	1279	C712_0135 IE3D160L04	267.4	13.73	4380/319	1597
113	1.5	196	1.5	1228	C712_0130 IE3D160L04	267.4	13.18	4851/368	1589
118	1.1	205	0.95	1172	C612_0125 IE3D160L04	232.1	12.58	2013/160	1578
117	1.6	202	1.6	1187	C812_0125 IE3D160L04	327.0	12.75	5546/435	1621
130	1.2	225	1.0	1067	C612_0115 IE3D160L04	232.1	11.46	928/81	1585
144	0.83	–	–	967	C502_0105 IE3D160L04	216.8	10.38	841/81	1575
147	1.3	255	1.1	942	C612_0100 IE3D160L04	232.1	10.11	3721/368	1582
150	1.7	260	1.7	923	C712_0099 IE3D160L04	267.4	9.912	4599/464	1598
161	0.93	279	0.85	862	C502_0093 IE3D160L04	216.8	9.261	3445/372	1578
163	1.4	283	1.2	849	C612_0091 IE3D160L04	232.1	9.118	848/93	1590
180	1.0	312	0.92	769	C502_0083 IE3D160L04	216.8	8.263	1537/186	1578
182	1.5	315	1.3	763	C612_0082 IE3D160L04	232.1	8.190	1769/216	1586
192	0.85	–	–	723	C502_0078 IE3D160L04	216.8	7.763	621/80	1571
229	1.7	396	1.5	607	C612_0065 IE3D160L04	232.1	6.518	3233/496	1593
255	1.0	441	0.86	545	C502_0059 IE3D160L04	216.8	5.850	117/20	1573
322	1.2	558	1.0	431	C502_0046 IE3D160L04	216.8	4.629	162/35	1575
385	1.4	667	1.1	360	C502_0039 IE3D160L04	216.8	3.867	58/15	1578
484	1.6	839	1.3	287	C502_0031 IE3D160L04	216.8	3.077	477/155	1582
754	1.7	–	–	184	C502_0020 IE3D160L04	216.8	1.976	81/41	1597
P_N (50 Hz) = 18,50 kW, P_N (87 Hz) = 32,04 kW									
23	0.95	40	0.85	7409	C913_0650 IE3D180M04	481.3	64.59	295545/4576	1688
26	0.92	46	0.92	6499	C912_0560 IE3D180M04	452.4	55.83	335/6	1699
32	1.1	56	1.1	5314	C912_0460 IE3D180M04	452.4	45.66	3835/84	1707
38	1.3	65	1.3	4574	C912_0390 IE3D180M04	452.4	39.30	4087/104	1700
42	0.88	72	0.88	4113	C812_0350 IE3D180M04	362.0	35.33	106/3	1698
44	1.1	76	1.1	3909	C812_0340 IE3D180M04	362.0	33.59	2183/65	1692
46	1.8	80	1.8	3740	C912_0320 IE3D180M04	452.4	32.13	3599/112	1708
52	1.8	89	1.8	3333	C912_0290 IE3D180M04	452.4	28.63	2405/84	1736
54	1.1	93	1.1	3197	C812_0270 IE3D180M04	362.0	27.47	412/15	1706
57	1.4	98	1.3	3033	C812_0260 IE3D180M04	362.0	26.06	3127/120	1698
64	1.3	110	1.3	2699	C812_0230 IE3D180M04	362.0	23.19	1600/69	1714
71	1.0	124	0.91	2406	C712_0210 IE3D180M04	302.4	20.67	1323/64	1691
73	1.8	126	1.5	2358	C812_0200 IE3D180M04	362.0	20.26	6077/300	1707
73	2.4	127	2.4	2346	C912_0200 IE3D180M04	452.4	20.15	2257/112	1740
81	0.94	140	0.94	2126	C712_0185 IE3D180M04	302.4	18.26	420/23	1701
85	1.8	148	1.7	2012	C812_0175 IE3D180M04	362.0	17.29	1504/87	1731
86	2.0	149	1.7	1991	C812_0170 IE3D180M04	362.0	17.10	1180/69	1715
88	1.2	153	1.0	1948	C712_0165 IE3D180M04	302.4	16.73	1071/64	1695
107	2.2	186	1.9	1602	C812_0140 IE3D180M04	362.0	13.76	1280/93	1749
107	1.3	186	1.2	1598	C712_0135 IE3D180M04	302.4	13.73	4380/319	1710
112	1.5	194	1.2	1534	C712_0130 IE3D180M04	302.4	13.18	4851/368	1702
117	0.91	–	–	1464	C612_0125 IE3D180M04	267.1	12.58	2013/160	1691
116	2.4	200	2.0	1484	C812_0125 IE3D180M04	362.0	12.75	5546/435	1734
125	1.5	217	1.3	1369	C712_0120 IE3D180M04	302.4	11.76	1035/88	1716
129	0.97	223	0.82	1334	C612_0115 IE3D180M04	267.1	11.46	928/81	1698
146	1.1	253	0.89	1177	C612_0100 IE3D180M04	267.1	10.11	3721/368	1695
145	2.5	252	2.4	1182	C812_0100 IE3D180M04	362.0	10.15	944/93	1754
149	1.8	258	1.5	1154	C712_0099 IE3D180M04	302.4	9.912	4599/464	1711
162	1.1	280	0.95	1061	C612_0091 IE3D180M04	267.1	9.118	848/93	1703
163	2.5	–	–	1053	C812_0090 IE3D180M04	362.0	9.043	208/23	1801
174	2.0	301	1.6	988	C712_0085 IE3D180M04	302.4	8.490	4347/512	1718
180	1.2	312	1.0	953	C612_0082 IE3D180M04	267.1	8.190	1769/216	1699
200	2.2	–	–	856	C712_0074 IE3D180M04	302.4	7.357	3480/473	1745
207	1.3	–	–	828	C612_0071 IE3D180M04	267.1	7.111	64/9	1712
221	2.5	–	–	776	C812_0067 IE3D180M04	362.0	6.670	767/115	1812
226	1.4	392	1.2	759	C612_0065 IE3D180M04	267.1	6.518	3233/496	1706
252	1.5	–	–	681	C612_0059 IE3D180M04	267.1	5.854	240/41	1721
278	2.5	–	–	618	C712_0053 IE3D180M04	302.4	5.311	1827/344	1751
290	1.7	–	–	592	C612_0051 IE3D180M04	267.1	5.083	61/12	1716
346	2.5	–	–	496	C712_0043 IE3D180M04	302.4	4.259	477/112	1776

n_2 50 Hz [rpm]	S 50 Hz	n_2 87 Hz [rpm]	S 87 Hz	M_{2N} [Nm]	Type	m [kg]	i	i_{exakt}	J_1 [10^{-4}kgm²]
P_N (50 Hz) = 18,50 kW, P_N (87 Hz) = 32,04 kW									
353	1.9	–	–	487	C612_0042 IE3D180M04	267.1	4.184	2745/656	1727
746	1.7	–	–	230	C502_0020 IE3D180M04	251.8	1.976	81/41	1710
P_N (50 Hz) = 22,00 kW, P_N (87 Hz) = 38,11 kW									
32	0.95	56	0.95	6289	C912_0460 IE3D180L04	482.4	45.66	3835/84	2057
38	1.1	65	1.1	5413	C912_0390 IE3D180L04	482.4	39.30	4087/104	2050
44	0.91	76	0.90	4626	C812_0340 IE3D180L04	392.0	33.59	2183/65	2042
46	1.5	80	1.5	4426	C912_0320 IE3D180L04	482.4	32.13	3599/112	2058
52	1.5	90	1.5	3944	C912_0290 IE3D180L04	482.4	28.63	2405/84	2086
54	0.95	93	0.95	3783	C812_0270 IE3D180L04	392.0	27.47	412/15	2056
57	1.2	98	1.1	3589	C812_0260 IE3D180L04	392.0	26.06	3127/120	2048
64	1.1	111	1.1	3194	C812_0230 IE3D180L04	392.0	23.19	1600/69	2064
72	0.84	–	–	2847	C712_0210 IE3D180L04	332.4	20.67	1323/64	2041
73	1.5	127	1.3	2790	C812_0200 IE3D180L04	392.0	20.26	6077/300	2057
73	2.0	127	2.0	2776	C912_0200 IE3D180L04	482.4	20.15	2257/112	2090
86	1.5	148	1.4	2381	C812_0175 IE3D180L04	392.0	17.29	1504/87	2081
87	1.7	150	1.4	2355	C812_0170 IE3D180L04	392.0	17.10	1180/69	2065
88	1.0	153	0.88	2305	C712_0165 IE3D180L04	332.4	16.73	1071/64	2045
108	1.9	186	1.6	1896	C812_0140 IE3D180L04	392.0	13.76	1280/93	2099
108	1.1	187	1.0	1891	C712_0135 IE3D180L04	332.4	13.73	4380/319	2060
112	1.2	194	1.0	1816	C712_0130 IE3D180L04	332.4	13.18	4851/368	2052
116	2.1	201	1.7	1756	C812_0125 IE3D180L04	392.0	12.75	5546/435	2084
126	1.2	218	1.1	1620	C712_0120 IE3D180L04	332.4	11.76	1035/88	2066
129	0.82	–	–	1578	C612_0115 IE3D180L04	297.1	11.46	928/81	2048
146	0.89	–	–	1393	C612_0100 IE3D180L04	297.1	10.11	3721/368	2045
146	2.1	253	2.0	1398	C812_0100 IE3D180L04	392.0	10.15	944/93	2104
149	1.5	259	1.3	1365	C712_0099 IE3D180L04	332.4	9.912	4599/464	2061
162	0.96	281	0.80	1256	C612_0091 IE3D180L04	297.1	9.118	848/93	2053
164	2.1	–	–	1246	C812_0090 IE3D180L04	392.0	9.043	208/23	2151
174	1.7	302	1.4	1169	C712_0085 IE3D180L04	332.4	8.490	4347/512	2068
181	1.0	313	0.86	1128	C612_0082 IE3D180L04	297.1	8.190	1769/216	2049
201	1.8	–	–	1013	C712_0074 IE3D180L04	332.4	7.357	3480/473	2095
208	1.1	–	–	979	C612_0071 IE3D180L04	297.1	7.111	64/9	2062
222	2.1	–	–	919	C812_0067 IE3D180L04	392.0	6.670	767/115	2162
227	1.2	393	1.0	898	C612_0065 IE3D180L04	297.1	6.518	3233/496	2056
253	1.3	–	–	806	C612_0059 IE3D180L04	297.1	5.854	240/41	2071
279	2.1	–	–	732	C712_0053 IE3D180L04	332.4	5.311	1827/344	2101
291	1.4	–	–	700	C612_0051 IE3D180L04	297.1	5.083	61/12	2066
347	2.1	–	–	587	C712_0043 IE3D180L04	332.4	4.259	477/112	2126
354	1.6	–	–	576	C612_0042 IE3D180L04	297.1	4.184	2745/656	2077
749	1.4	–	–	272	C502_0020 IE3D180L04	281.8	1.976	81/41	2060
P_N (50 Hz) = 30,00 kW, P_N (87 Hz) = 51,96 kW									
41	0.89	–	–	6740	C912_0360 IE3D200L04	569.4	36.01	7345/204	4150
46	1.2	–	–	6016	C912_0320 IE3D200L04	569.4	32.13	3599/112	4138
52	1.1	–	–	5360	C912_0290 IE3D200L04	569.4	28.63	2405/84	4166
59	1.5	–	–	4744	C912_0250 IE3D200L04	569.4	25.34	6893/272	4152
63	1.4	–	–	4379	C912_0230 IE3D200L04	569.4	23.39	6175/264	4187
74	1.9	–	–	3773	C912_0200 IE3D200L04	569.4	20.15	2257/112	4170
84	1.8	–	–	3304	C912_0175 IE3D200L04	569.4	17.65	6565/372	4223
90	2.3	–	–	3082	C912_0165 IE3D200L04	569.4	16.46	5795/352	4192
108	1.4	–	–	2577	C812_0140 IE3D200L04	479.0	13.76	1280/93	4179
120	3.0	–	–	2325	C912_0125 IE3D200L04	569.4	12.42	6161/496	4231
126	2.7	–	–	2204	C912_0120 IE3D200L04	569.4	11.78	1625/138	4302
146	1.8	–	–	1900	C812_0100 IE3D200L04	479.0	10.15	944/93	4184
164	1.9	–	–	1693	C812_0090 IE3D200L04	479.0	9.043	208/23	4231
179	3.3	–	–	1552	C912_0083 IE3D200L04	569.4	8.288	1525/184	4321
223	2.3	–	–	1249	C812_0067 IE3D200L04	479.0	6.670	767/115	4242
351	3.2	–	–	791	C812_0042 IE3D200L04	479.0	4.225	1711/405	4354
P_N (50 Hz) = 37,00 kW, P_N (87 Hz) = 64,09 kW									
46	0.95	–	–	7387	C912_0320 IE3D225S04	609.4	32.13	3599/112	4703
52	0.91	–	–	6582	C912_0290 IE3D225S04	609.4	28.63	2405/84	4731
59	1.2	–	–	5826	C912_0250 IE3D225S04	609.4	25.34	6893/272	4717
64	1.1	–	–	5377	C912_0230 IE3D225S04	609.4	23.39	6175/264	4752
74	1.5	–	–	4633	C912_0200 IE3D225S04	609.4	20.15	2257/112	4735
84	1.5	–	–	4057	C912_0175 IE3D225S04	609.4	17.65	6565/372	4788
91	1.9	–	–	3785	C912_0165 IE3D225S04	609.4	16.46	5795/352	4757

n_2 50 Hz [rpm]	S 50 Hz	n_2 87 Hz [rpm]	S 87 Hz	M_{2N} [Nm]	Type	m [kg]	i	i_{exakt}	J_1 [10^{-4}kgm²]
P_N (50 Hz) = 37,00 kW, P_N (87 Hz) = 64,09 kW									
120	2.4	–	–	2855	C912_0125 IE3D225S04	609.4	12.42	6161/496	4796
127	2.2	–	–	2707	C912_0120 IE3D225S04	609.4	11.78	1625/138	4867
180	2.7	–	–	1905	C912_0083 IE3D225S04	609.4	8.288	1525/184	4886
P_N (50 Hz) = 45,00 kW, P_N (87 Hz) = 77,94 kW									
58	0.98	–	–	7129	C912_0250 IE3D225M04	692.4	25.34	6893/272	6232
63	0.91	–	–	6580	C912_0230 IE3D225M04	692.4	23.39	6175/264	6267
74	1.2	–	–	5669	C912_0200 IE3D225M04	692.4	20.15	2257/112	6250
84	1.2	–	–	4964	C912_0175 IE3D225M04	692.4	17.65	6565/372	6303
90	1.5	–	–	4631	C912_0165 IE3D225M04	692.4	16.46	5795/352	6272
119	2.0	–	–	3494	C912_0125 IE3D225M04	692.4	12.42	6161/496	6311
126	1.8	–	–	3312	C912_0120 IE3D225M04	692.4	11.78	1625/138	6382
179	2.2	–	–	2331	C912_0083 IE3D225M04	692.4	8.288	1525/184	6401

2.3 Dimensional drawings

In this chapter you can find the dimensions of the geared motors.

There is a dimensional drawing for every possible shaft/housing design, each with the tables for gear unit dimensions, motor dimensions and geared motor dimensions.

Dimensions can exceed the specifications of ISO 2768-mK due to casting tolerances or accumulation of individual tolerances.

We reserve the right to make dimensional changes due to ongoing technical development.

You can download 3D models of our standard drives at http://configurator.stoeber.de.

Tolerances

Axis height in accordance with DIN 747	Tolerance
Up to 50 mm	-0.4 mm
Up to 250 mm	-0.5 mm
Up to 630 mm	-0.6 mm

Solid shaft	Tolerance
Shaft ∅ fit ≤ 50 mm	DIN 748-1, ISO k6
Shaft ∅ fit > 50 mm	DIN 748-1, ISO m6
Feather keys	DIN 6885-1, high form A

Flange	Pilot tolerance
Up to 300 mm	ISO j6
Starting at 350 mm	ISO h6

Centering holes in solid shafts in accordance with DIN 332-2, DR shape

Thread size	M4	M5	M6	M8	M10	M12	M16	M20	M24
Thread depth [mm]	10	12.5	16	19	22	28	36	42	50

2.3.1 Solid shaft design with feather key, N housing design (base)

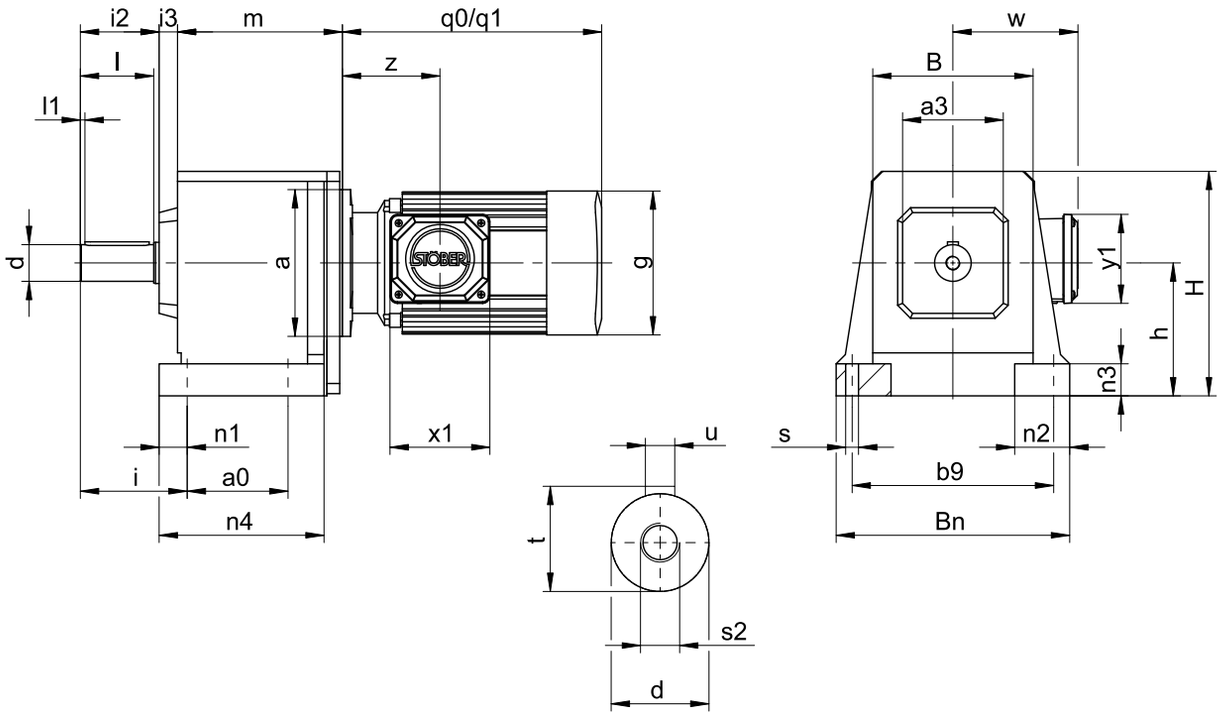

q0 Applies to motors without brake. q1 Applies to motors with brake.

C203, C303, C612, C613: Motor adapter and gear unit are sometimes non-coaxial.

Options: C0 – C5 also available with solid shaft without feather key; on request starting at C6.

Dimensions of gear units

Type	a0	a3	b9	B	Bn	Ød	h	H	i	i2	i3	l	l1	n1	n2	n3	n4	Øs	s2	t	u
C0	62	60	110	92	132	20_{k6}	82	144	55	44	13	40	3	11	35	20	95.0	7	M6	22.5	A6×6×32
C1	70	80	150	124	176	25_{k6}	102	177	67	54	15	50	5	13	42	25	117.5	9	M10	28.0	A8×7×40
C2	85	95	170	138	200	30_{k6}	115	195	79	65	21	60	5	14	50	30	134.5	11	M10	33.0	A8×7×50
C3	105	95	185	150	215	30_{k6}	130	215	79	65	20	60	5	14	50	30	153.5	11	M10	33.0	A8×7×50
C4	110	110	220	175	255	40_{k6}	145	245	105	86	20	80	5	19	60	35	180.0	14	M16	43.0	A12×8×70
C5	130	130	245	192	290	40_{k6}	170	290	108	86	21	80	5	22	70	40	197.0	18	M16	43.0	A12×8×70
C6	215	177	245	225	300	50_{k6}	200	315	130	106	47	100	5	25	75	40	265.0	18	M16	53.5	A14×9×90
C7	235	192	300	265	365	60_{m6}	235	375	163	127	58	120	5	25	90	50	285.0	18	M20	64.0	A18×11×100
C8	300	223	340	310	435	70_{m6}	290	450	190	148	70	140	5	29	95	55	360.0	22	M20	74.5	A20×12×125
C9	340	277	400	365	510	90_{m6}	340	530	222	178	78	170	5	34	110	60	410.0	26	M24	95.0	A25×14×140

Dimensions of motors

Type	g	q0	q1	w	x1	y1	z
D063K04	109	179	231	115	109.0	97.0	81.0
D063M04	109	179	231	115	109.0	97.0	81.0
D063M02	109	179	231	115	109.0	97.0	81.0
D071K04	124	208	260	120	109.0	97.0	94.0
D071K02	124	208	260	120	109.0	97.0	94.0
D071L04	124	208	260	120	109.0	97.0	94.0
D071L02	124	208	260	120	109.0	97.0	94.0
D080K04	139	238	295	128	109.0	97.0	97.0

Type	g	q0	q1	w	x1	y1	z
IE3D080K02	139	238	295	128	109.0	97.0	97.0
IE3D080L04	157	283	351	137	109.0	97.0	107.0
IE3D080LX02	157	283	351	137	109.0	97.0	107.0
IE3D090S04	177	310	380	146	120.0	109.0	114.0
IE3D090S02	157	283	351	137	120.0	109.0	107.0
IE3D090LX04	177	365	435	146	120.0	109.0	114.0
IE3D090L02	177	310	380	146	120.0	109.0	114.0
IE3D100KX04	196	404	491	155	120.0	109.0	120.0
IE3D100L02	196	340	427	155	120.0	109.0	120.0
IE3D100LX04	196	444	531	155	120.0	109.0	120.0
IE3D112M02	196	374	461	155	120.0	109.0	120.0
IE3D112M04	217	424	521	178	146.5	156.5	134.0
IE3D132S04	258	476	591	199	146.5	156.5	141.5
IE3D132M04	258	526	641	199	146.5	156.5	141.5
IE3D160M04	313	461	589	242	166.5	193.5	138.0
IE3D160L04	313	549	677	242	166.5	193.5	138.0
IE3D180M04	351	601	748	260	166.5	193.5	178.0
IE3D180L04	351	651	798	260	166.5	193.5	178.0
IE3D200L04	390	729	878	298	207.0	209.0	242.0
IE3D225S04	390	706	855	300	207.0	209.0	169.0
IE3D225M04	440	838	986	324	207.0	209.0	242.0

Dimensions of geared motors

Type	D063		D071		D080	
	a	m	a	m	a	m
C002	∅140	97.5	∅140	97.5	∅160	101.5
C102	∅140	118.0	∅140	118.0	∅160	122.0
C103	∅140	155.0	∅140	155.0	–	–
C202	–	–	∅140	129.0	∅160	133.0
C203	∅140	166.0	∅140	166.0	–	–
C302	–	–	–	–	∅160	152.5
C303	∅140	185.5	∅140	185.5	∅160	195.5
C403	–	–	–	–	∅160	223.0
C503	–	–	–	–	∅160	243.0
C613	–	–	–	–	∅160	222.0

Type	IE3D080		IE3D090		IE3D100		IE3D112		IE3D132		IE3D160		IE3D180		IE3D200		IE3D225	
	a	m	a	m	a	m	a	m	a	m	a	m	a	m	a	m	a	m
C002	∅160	101.5	∅160	101.5	–	–	–	–	–	–	–	–	–	–	–	–	–	–
C102	∅160	122.0	∅160	122.0	∅200	124.0	∅200	124.0	–	–	–	–	–	–	–	–	–	–
C202	∅160	133.0	∅160	133.0	∅200	135.0	∅200	135.0	–	–	–	–	–	–	–	–	–	–
C302	∅160	152.5	∅160	152.5	∅200	154.5	∅200	154.5	∅250	157.5	–	–	–	–	–	–	–	–
C303	∅160	195.5	–	–	–	–	–	–	–	–	–	–	–	–	–	–	–	–
C402	∅160	180.0	∅160	180.0	∅200	182.0	∅200	182.0	∅250	185.0	–	–	–	–	–	–	–	–
C403	∅160	223.0	∅160	223.0	–	–	–	–	–	–	–	–	–	–	–	–	–	–
C502	∅160	200.0	∅160	200.0	∅200	202.0	∅200	202.0	∅250	205.0	∅300	219.0	∅300	219.0	–	–	–	–
C503	∅160	243.0	∅160	243.0	–	–	–	–	–	–	–	–	–	–	–	–	–	–
C612	–	–	–	–	∅200	180.0	∅200	180.0	∅250	183.0	∅300	196.0	∅300	196.0	–	–	–	–
C613	∅160	222.0	∅160	222.0	∅200	242.0	∅200	242.0	–	–	–	–	–	–	–	–	–	–
C712	–	–	–	–	∅200	201.0	∅200	201.0	∅250	203.0	∅300	216.0	∅300	216.0	–	–	–	–
C713	–	–	–	–	∅200	262.0	∅200	262.0	∅250	274.0	–	–	–	–	–	–	–	–
C812	–	–	–	–	–	–	–	–	∅250	237.0	∅300	250.0	∅300	250.0	∅350	273.0	–	–
C813	–	–	–	–	∅200	296.0	∅200	296.0	∅250	308.0	–	–	–	–	–	–	–	–
C912	–	–	–	–	–	–	–	–	–	–	∅300	279.0	∅300	279.0	∅350	302.0	∅400	302.0
C913	–	–	–	–	–	–	–	–	∅250	337.0	∅300	362.0	∅300	362.0	–	–	–	–

2.3.2 Solid shaft design with feather key, G housing design (pitch circle diameter)

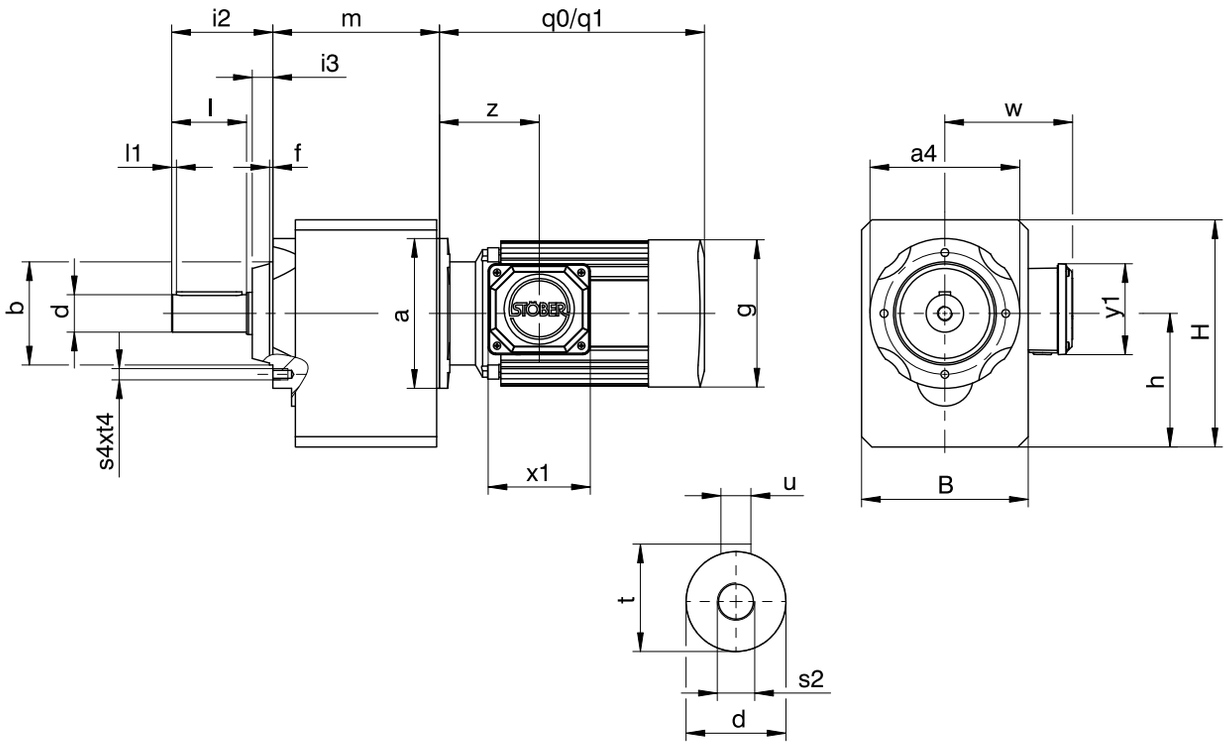

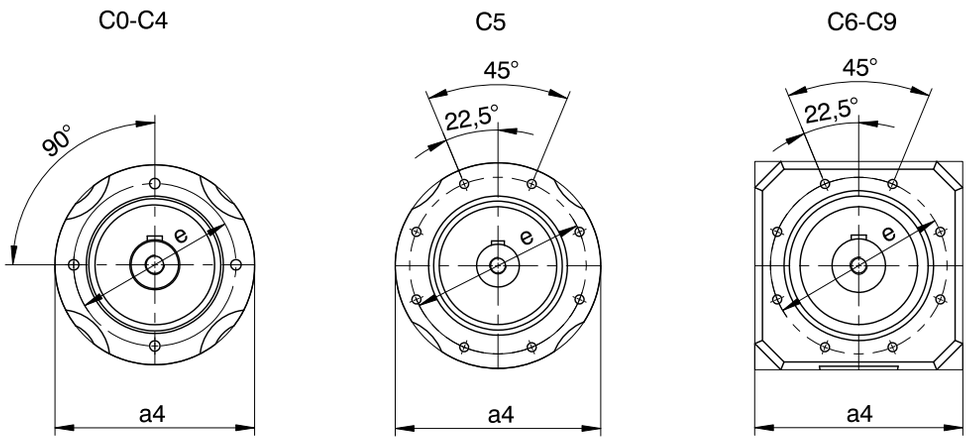

q0 Applies to motors without brake. q1 Applies to motors with brake.

C203, C303, C612, C613: Motor adapter and gear unit are sometimes non-coaxial.

Options: C0 – C5 also available with solid shaft without feather key; on request starting at C6.

Dimensions of gear units

Type	a4	Øb	B	Ød	Øe	f	h	H	i2	i3	l	l1	s2	s4	t	t4	u
C0	∅87	55_{j6}	97	20_{k6}	75	3.0	79.0	141.0	58	14	40	3	M6	M6	22.5	10	A6×6×32
C1	∅120	80_{j6}	130	25_{k6}	100	3.0	100.0	175.0	71	17	50	5	M10	M6	28.0	13	A8×7×40
C2	∅140	95_{j6}	142	30_{k6}	115	3.0	112.0	192.0	87	22	60	5	M10	M8	33.0	13	A8×7×50
C3	∅140	95_{j6}	154	30_{k6}	115	3.0	127.0	212.0	87	22	60	5	M10	M8	33.0	13	A8×7×50
C4	∅160	110_{j6}	178	40_{k6}	130	3.5	142.5	242.5	108	22	80	5	M16	M10	43.0	16	A12×8×70
C5	∅192	130_{j6}	195	40_{k6}	165	3.5	166.0	286.0	109	23	80	5	M16	M10	43.0	16	A12×8×70
C6	□180	140_{j6}	225	50_{k6}	165	5.0	195.0	310.0	136	30	100	5	M16	M10	53.5	16	A14×9×90
C7	□195	155_{j6}	265	60_{m6}	185	8.0	231.0	371.0	164	37	120	5	M20	M12	64.0	19	A18×11×100
C8	□226	185_{j6}	310	70_{m6}	215	5.0	285.0	445.0	185	37	140	5	M20	M12	74.5	19	A20×12×125
C9	□280	230_{j6}	365	90_{m6}	265	5.0	334.0	524.0	220	42	170	5	M24	M16	95.0	26	A25×14×140

Dimensions of motors

Type	g	q0	q1	w	x1	y1	z
D063K04	109	179	231	115	109.0	97.0	81.0
D063M04	109	179	231	115	109.0	97.0	81.0
D063M02	109	179	231	115	109.0	97.0	81.0
D071K04	124	208	260	120	109.0	97.0	94.0

Type	g	q0	q1	w	x1	y1	z
D071K02	124	208	260	120	109.0	97.0	94.0
D071L04	124	208	260	120	109.0	97.0	94.0
D071L02	124	208	260	120	109.0	97.0	94.0
D080K04	139	238	295	128	109.0	97.0	97.0

Type	g	q0	q1	w	x1	y1	z
IE3D080K02	139	238	295	128	109.0	97.0	97.0
IE3D080L04	157	283	351	137	109.0	97.0	107.0
IE3D080LX02	157	283	351	137	109.0	97.0	107.0
IE3D090S04	177	310	380	146	120.0	109.0	114.0
IE3D090S02	157	283	351	137	120.0	109.0	107.0
IE3D090LX04	177	365	435	146	120.0	109.0	114.0
IE3D090L02	177	310	380	146	120.0	109.0	114.0
IE3D100KX04	196	404	491	155	120.0	109.0	120.0
IE3D100L02	196	340	427	155	120.0	109.0	120.0
IE3D100LX04	196	444	531	155	120.0	109.0	120.0
IE3D112M02	196	374	461	155	120.0	109.0	120.0
IE3D112M04	217	424	521	178	146.5	156.5	134.0
IE3D132S04	258	476	591	199	146.5	156.5	141.5
IE3D132M04	258	526	641	199	146.5	156.5	141.5
IE3D160M04	313	461	589	242	166.5	193.5	138.0
IE3D160L04	313	549	677	242	166.5	193.5	138.0
IE3D180M04	351	601	748	260	166.5	193.5	178.0
IE3D180L04	351	651	798	260	166.5	193.5	178.0
IE3D200L04	390	729	878	298	207.0	209.0	242.0
IE3D225S04	390	706	855	300	207.0	209.0	169.0
IE3D225M04	440	838	986	324	207.0	209.0	242.0

Dimensions of geared motors

Type	D063		D071		D080	
	a	m	a	m	a	m
C002	∅140	96	∅140	96	∅160	100
C102	∅140	116	∅140	116	∅160	120
C103	∅140	153	∅140	153	–	–
C202	–	–	∅140	128	∅160	132
C203	∅140	165	∅140	165	–	–
C302	–	–	–	–	∅160	151
C303	∅140	184	∅140	184	∅160	194
C403	–	–	–	–	∅160	221
C503	–	–	–	–	∅160	241
C613	–	–	–	–	∅160	239

Type	IE3D080		IE3D090		IE3D100		IE3D112		IE3D132		IE3D160		IE3D180		IE3D200		IE3D225	
	a	m	a	m	a	m	a	m	a	m	a	m	a	m	a	m	a	m
C002	∅160	100	∅160	100	–	–	–	–	–	–	–	–	–	–	–	–	–	–
C102	∅160	120	∅160	120	∅200	122	∅200	122	–	–	–	–	–	–	–	–	–	–
C202	∅160	132	∅160	132	∅200	134	∅200	134	–	–	–	–	–	–	–	–	–	–
C302	∅160	151	∅160	151	∅200	153	∅200	153	∅250	156	–	–	–	–	–	–	–	–
C303	∅160	194	–	–	–	–	–	–	–	–	–	–	–	–	–	–	–	–
C402	∅160	178	∅160	178	∅200	180	∅200	180	∅250	183	–	–	–	–	–	–	–	–
C403	∅160	221	∅160	221	–	–	–	–	–	–	–	–	–	–	–	–	–	–
C502	∅160	198	∅160	198	∅200	200	∅200	200	∅250	203	∅300	217	∅300	217	–	–	–	–
C503	∅160	241	∅160	241	–	–	–	–	–	–	–	–	–	–	–	–	–	–
C612	–	–	–	–	∅200	197	∅200	197	∅250	200	∅300	213	∅300	213	–	–	–	–
C613	∅160	239	∅160	239	∅200	259	∅200	259	–	–	–	–	–	–	–	–	–	–
C712	–	–	–	–	∅200	222	∅200	222	∅250	224	∅300	237	∅300	237	–	–	–	–
C713	–	–	–	–	∅200	283	∅200	283	∅250	295	–	–	–	–	–	–	–	–
C812	–	–	–	–	–	–	–	–	∅250	270	∅300	283	∅300	283	∅350	306	–	–
C813	–	–	–	–	∅200	329	∅200	329	∅250	341	–	–	–	–	–	–	–	–
C912	–	–	–	–	–	–	–	–	–	–	∅300	315	∅300	315	∅350	338	∅400	338
C913	–	–	–	–	–	–	–	–	∅250	373	∅300	398	∅300	398	–	–	–	–

2.3.3 Solid shaft design with feather key, F housing design (round flange)

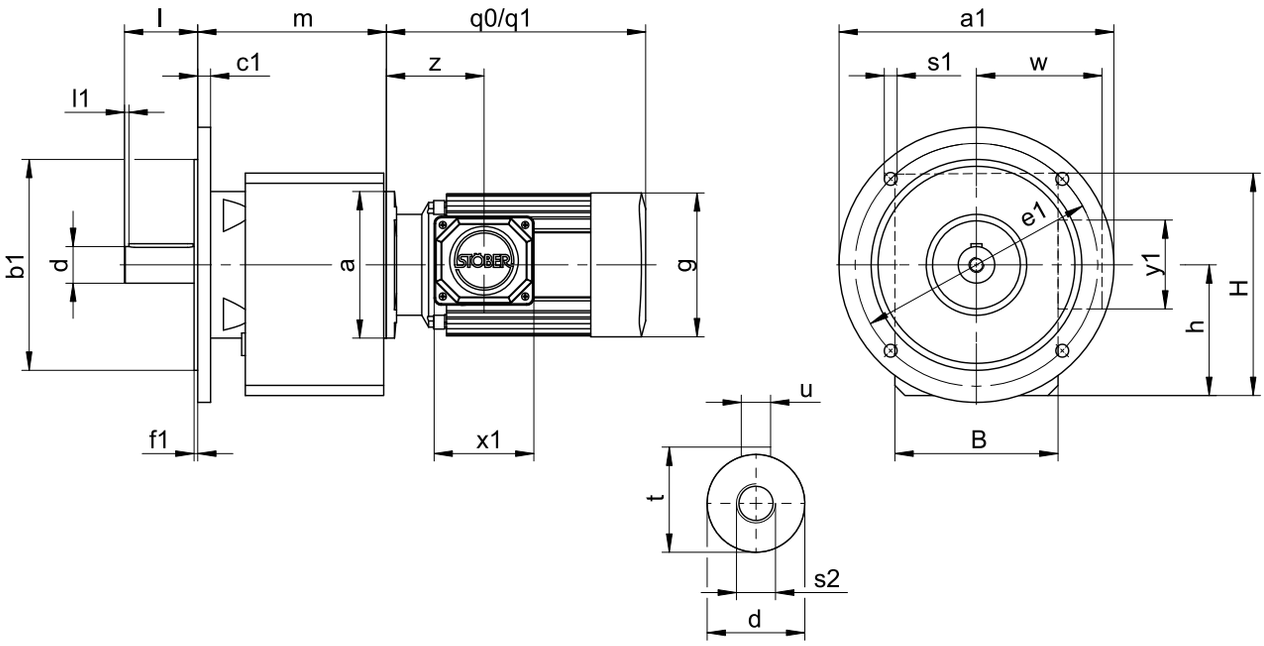

q0 Applies to motors without brake. q1 Applies to motors with brake.

C203, C303, C612, C613: Motor adapter and gear unit are sometimes non-coaxial.

Options: C0 – C5 also available with solid shaft without feather key; on request starting at C6.

Dimensions of gear units

Type	Øa1	Øb1	B	c1	Ød	Øe1	f1	h	H	l	l1	Øs1	s2	t	u
C0	160	110_{j6}	97	10	20_{k6}	130	3.0	79.0	141.0	40	3	9	M6	22.5	A6×6×32
C1	200	130_{j6}	130	12	25_{k6}	165	3.5	100.0	175.0	50	5	11	M10	28.0	A8×7×40
C2	200	130_{j6}	142	12	30_{k6}	165	3.5	112.0	192.0	60	5	11	M10	33.0	A8×7×50
C3	250	180_{j6}	154	12	30_{k6}	215	4.0	127.0	212.0	60	5	14	M10	33.0	A8×7×50
C4	250	180_{j6}	178	14	40_{k6}	215	4.0	142.5	242.5	80	5	14	M16	43.0	A12×8×70
C5	300	230_{j6}	195	16	40_{k6}	265	4.0	166.0	286.0	80	5	14	M16	43.0	A12×8×70
C6	300	230_{j6}	225	17	50_{k6}	265	4.0	195.0	310.0	100	5	14	M16	53.5	A14×9×90
C7	350	250_{h6}	265	18	60_{m6}	300	5.0	231.0	371.0	120	5	18	M20	64.0	A18×11×100
C8	400	300_{h6}	310	20	70_{m6}	350	5.0	285.0	445.0	140	5	18	M20	74.5	A20×12×125
C9	450	350_{h6}	365	23	90_{m6}	400	5.0	334.0	524.0	170	5	18	M24	95.0	A25×14×140

Dimensions of additional round flanges

Type	Øa1	Øb1	c1	Øe1	f1	Øs1
C0	120	80_{j6}	10	100	3.0	7
C0	140	95_{j6}	10	115	3.0	9
C1	140	95_{j6}	8	115	3.5	9
C1	160	110_{j6}	10	130	3.5	9
C2	160	110_{j6}	10	130	3.5	9
C2	250	180_{j6}	12	215	4.0	14
C3	160	110_{j6}	10	130	3.5	9
C3	200	130_{j6}	12	165	3.5	11
C4	200	130_{j6}	14	165	3.5	11
C4	300	230_{j6}	14	265	4.0	14
C5	250	180_{j6}	14	215	4.0	14
C8	350	250_{h6}	18	300	5.0	18
C8	450	350_{h6}	20	400	5.0	18

Dimensions of motors

Type	g	q0	q1	w	x1	y1	z
D063K04	109	179	231	115	109.0	97.0	81.0
D063M04	109	179	231	115	109.0	97.0	81.0
D063M02	109	179	231	115	109.0	97.0	81.0
D071K04	124	208	260	120	109.0	97.0	94.0
D071K02	124	208	260	120	109.0	97.0	94.0

Type	g	q0	q1	w	x1	y1	z
D071L04	124	208	260	120	109.0	97.0	94.0
D071L02	124	208	260	120	109.0	97.0	94.0
D080K04	139	238	295	128	109.0	97.0	97.0

Type	g	q0	q1	w	x1	y1	z
IE3D080K02	139	238	295	128	109.0	97.0	97.0
IE3D080L04	157	283	351	137	109.0	97.0	107.0
IE3D080LX02	157	283	351	137	109.0	97.0	107.0
IE3D090S04	177	310	380	146	120.0	109.0	114.0
IE3D090S02	157	283	351	137	120.0	109.0	107.0
IE3D090LX04	177	365	435	146	120.0	109.0	114.0
IE3D090L02	177	310	380	146	120.0	109.0	114.0
IE3D100KX04	196	404	491	155	120.0	109.0	120.0
IE3D100L02	196	340	427	155	120.0	109.0	120.0
IE3D100LX04	196	444	531	155	120.0	109.0	120.0
IE3D112M02	196	374	461	155	120.0	109.0	120.0
IE3D112M04	217	424	521	178	146.5	156.5	134.0
IE3D132S04	258	476	591	199	146.5	156.5	141.5
IE3D132M04	258	526	641	199	146.5	156.5	141.5
IE3D160M04	313	461	589	242	166.5	193.5	138.0
IE3D160L04	313	549	677	242	166.5	193.5	138.0
IE3D180M04	351	601	748	260	166.5	193.5	178.0
IE3D180L04	351	651	798	260	166.5	193.5	178.0
IE3D200L04	390	729	878	298	207.0	209.0	242.0
IE3D225S04	390	706	855	300	207.0	209.0	169.0
IE3D225M04	440	838	986	324	207.0	209.0	242.0

Dimensions of geared motors

Type	D063		D071		D080	
	a	m	a	m	a	m
C002	∅140	114	∅140	114	∅160	118
C102	∅140	137	∅140	137	∅160	141
C103	∅140	174	∅140	174	–	–
C202	–	–	∅140	155	∅160	159
C203	∅140	192	∅140	192	–	–
C302	–	–	–	–	∅160	178
C303	∅140	211	∅140	211	∅160	221
C403	–	–	–	–	∅160	249
C503	–	–	–	–	∅160	270
C613	–	–	–	–	∅160	275

Type	IE3D080		IE3D090		IE3D100		IE3D112		IE3D132		IE3D160		IE3D180		IE3D200		IE3D225	
	a	m	a	m	a	m	a	m	a	m	a	m	a	m	a	m	a	m
C002	∅160	118	∅160	118	–	–	–	–	–	–	–	–	–	–	–	–	–	–
C102	∅160	141	∅160	141	∅200	143	∅200	143	–	–	–	–	–	–	–	–	–	–
C202	∅160	159	∅160	159	∅200	161	∅200	161	–	–	–	–	–	–	–	–	–	–
C302	∅160	178	∅160	178	∅200	180	∅200	180	∅250	183	–	–	–	–	–	–	–	–
C303	∅160	221	–	–	–	–	–	–	–	–	–	–	–	–	–	–	–	–
C402	∅160	206	∅160	206	∅200	208	∅200	208	∅250	211	–	–	–	–	–	–	–	–
C403	∅160	249	∅160	249	–	–	–	–	–	–	–	–	–	–	–	–	–	–
C502	∅160	227	∅160	227	∅200	229	∅200	229	∅250	232	∅300	246	∅300	246	–	–	–	–
C503	∅160	270	∅160	270	–	–	–	–	–	–	–	–	–	–	–	–	–	–
C612	–	–	–	–	∅200	233	∅200	233	∅250	236	∅300	249	∅300	249	–	–	–	–
C613	∅160	275	∅160	275	∅200	295	∅200	295	–	–	–	–	–	–	–	–	–	–
C712	–	–	–	–	∅200	266	∅200	266	∅250	268	∅300	281	∅300	281	–	–	–	–
C713	–	–	–	–	∅200	327	∅200	327	∅250	339	–	–	–	–	–	–	–	–
C812	–	–	–	–	–	–	–	–	∅250	315	∅300	328	∅300	328	∅350	351	–	–
C813	–	–	–	–	∅200	374	∅200	374	∅250	386	–	–	–	–	–	–	–	–
C912	–	–	–	–	–	–	–	–	–	–	∅300	365	∅300	365	∅350	388	∅400	388
C913	–	–	–	–	–	–	–	–	∅250	423	∅300	448	∅300	448	–	–	–	–

2.3.4 Solid shaft design with feather key, Q housing design (square flange)

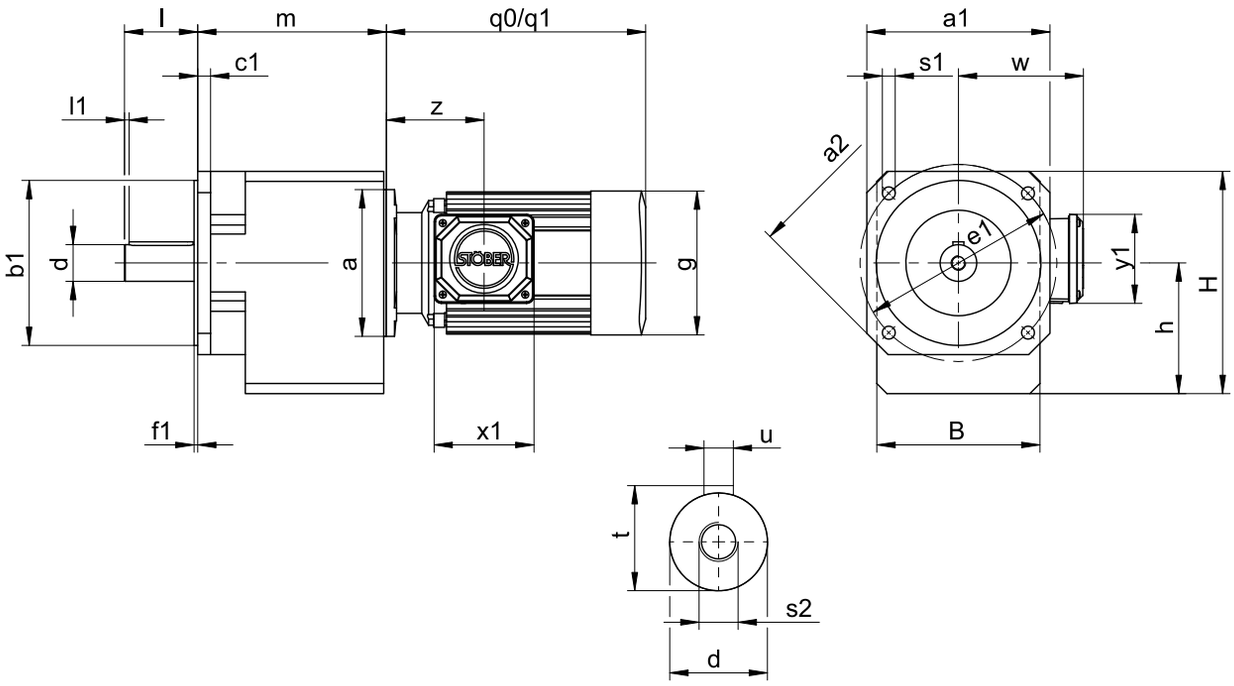

q0 Applies to motors without brake. q1 Applies to motors with brake.

C203, C303, C612, C613: Motor adapter and gear unit are sometimes non-coaxial.

Options: C0 – C5 also available with solid shaft without feather key; on request starting at C6.

Dimensions of gear units

Type	□a1	□a2	Øb1	B	c1	Ød	Øe1	f1	h	H	l	l1	Øs1	s2	t	u
C0	124	160	110_{j6}	97	9	20_{k6}	130	3.0	79.0	141.0	40	3	9	M6	22.5	A6×6×32
C1	145	192	130_{j6}	130	11	25_{k6}	165	3.5	100.0	175.0	50	5	11	M10	28.0	A8×7×40
C2	145	192	130_{j6}	142	11	30_{k6}	165	3.5	112.0	192.0	60	5	11	M10	33.0	A8×7×50
C3	200	250	180_{j6}	154	14	30_{k6}	215	4.0	127.0	212.0	60	5	14	M10	33.0	A8×7×50
C4	200	250	180_{j6}	178	14	40_{k6}	215	4.0	142.5	242.5	80	5	14	M16	43.0	A12×8×70

Dimensions of motors

Type	g	q0	q1	w	x1	y1	z
D063K04	109	179	231	115	109.0	97.0	81.0
D063M04	109	179	231	115	109.0	97.0	81.0
D063M02	109	179	231	115	109.0	97.0	81.0
D071K04	124	208	260	120	109.0	97.0	94.0
D071K02	124	208	260	120	109.0	97.0	94.0
D071L04	124	208	260	120	109.0	97.0	94.0
D071L02	124	208	260	120	109.0	97.0	94.0
D080K04	139	238	295	128	109.0	97.0	97.0

Type	g	q0	q1	w	x1	y1	z
IE3D080K02	139	238	295	128	109.0	97.0	97.0
IE3D080L04	157	283	351	137	109.0	97.0	107.0
IE3D080LX02	157	283	351	137	109.0	97.0	107.0
IE3D090S04	177	310	380	146	120.0	109.0	114.0
IE3D090S02	157	283	351	137	120.0	109.0	107.0
IE3D090LX04	177	365	435	146	120.0	109.0	114.0
IE3D090L02	177	310	380	146	120.0	109.0	114.0
IE3D100KX04	196	404	491	155	120.0	109.0	120.0
IE3D100L02	196	340	427	155	120.0	109.0	120.0
IE3D100LX04	196	444	531	155	120.0	109.0	120.0
IE3D112M02	196	374	461	155	120.0	109.0	120.0
IE3D112M04	217	424	521	178	146.5	156.5	134.0
IE3D132S04	258	476	591	199	146.5	156.5	141.5
IE3D132M04	258	526	641	199	146.5	156.5	141.5

Dimensions of geared motors

Type	D063		D071		D080	
	a	m	a	m	a	m
C002	∅140	114	∅140	114	∅160	118
C102	∅140	137	∅140	137	∅160	141
C103	∅140	174	∅140	174	–	–
C202	–	–	∅140	155	∅160	159
C203	∅140	192	∅140	192	–	–
C302	–	–	–	–	∅160	178
C303	∅140	211	∅140	211	∅160	221
C403	–	–	–	–	∅160	249

Type	D063		D071		D080		IE3D080		IE3D090		IE3D100		IE3D112		IE3D132	
	a	m	a	m	a	m	a	m	a	m	a	m	a	m	a	m
C002	∅140	114	∅140	114	∅160	118	∅160	118	∅160	118	–	–	–	–	–	–
C102	∅140	137	∅140	137	∅160	141	∅160	141	∅160	141	∅200	143	∅200	143	–	–
C103	∅140	174	∅140	174	–	–	–	–	–	–	–	–	–	–	–	–
C202	–	–	∅140	155	∅160	159	∅160	159	∅160	159	∅200	161	∅200	161	–	–
C203	∅140	192	∅140	192	–	–	–	–	–	–	–	–	–	–	–	–
C302	–	–	–	–	∅160	178	∅160	178	∅160	178	∅200	180	∅200	180	∅250	183
C303	∅140	211	∅140	211	∅160	221	∅160	221	–	–	–	–	–	–	–	–
C402	–	–	–	–	–	–	∅160	206	∅160	206	∅200	208	∅200	208	∅250	211
C403	–	–	–	–	∅160	249	∅160	249	∅160	249	–	–	–	–	–	–

2.3.5 Oil expansion tank

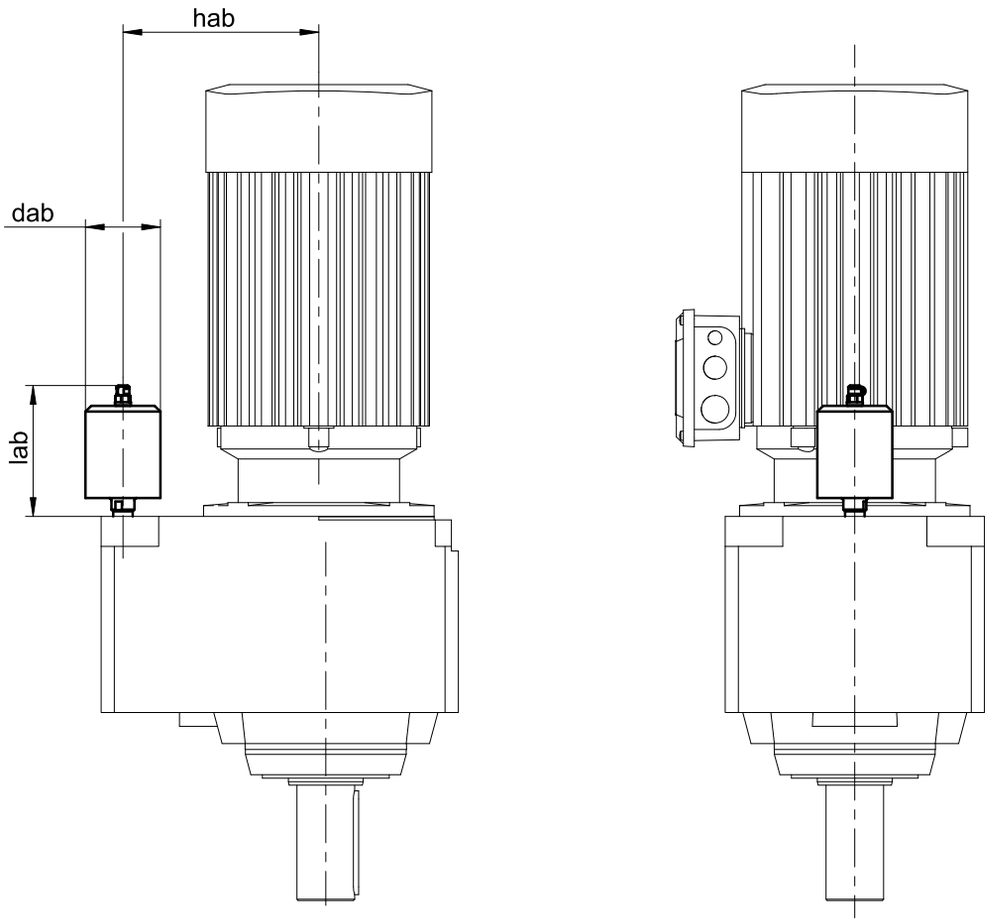

Dimensions

Type	IE3D100			IE3D112			IE3D132			IE3D160			IE3D180			IE3D200		
	dab	hab	lab	dab	hab	lab	dab	hab	lab	dab	hab	lab	dab	hab	lab	dab	hab	lab
C612	65	170	114.5	65	170	114.5	65	170	115.5	65	214	191.5	65	214	191.5	–	–	–
C712	73	205	129.5	73	205	129.5	73	205	129.5	73	205	129.5	73	205	129.5	–	–	–
C812	–	–	–	–	–	–	73	255	129.5	73	255	129.5	73	255	129.5	73	255	129.5
C912	–	–	–	–	–	–	–	–	–	73	305	126.0	73	305	126.0	73	305	112.0

More information can be found in the chapter [▶ 2.6.3]

2.4 Type designation

In this chapter, you can find an explanation of the type designation with the associated options.

Additional ordering information not included in the type designation can be found at the end of the chapter.

Sample code

C	2	0	2	N	0280	IE3D080L04

Explanation

Code	Designation	Design
C	Type	Helical gear unit
2	Size	2 (example)
0	Generation	Generation 0
1		Generation 1
2	Stages	Two-stage
3		Three-stage
G	Housing	Pitch circle diameter
F		Round flange
Q		Square flange
N		Foot
0280	Transmission ratio (i x 10 rounded)	i = 28.24 (example)
IE3D080	Motor	IE3D asynchronous motor
L04		
D080K04		Asynchronous motor

In order to complete the type designation, also specify:

- A detailed type designation of the motor, see the chapter [▶ 5.4]
- The mounting position, see the chapter [▶ 2.5.4]
- The position of the terminal box, see the chapter [▶ 2.5.6]
- Oil expansion tank (recommended for gear units in mounting position EL5), see the chapter [▶ 2.6.3]
- Standard or reinforced output bearing

2.5 Product description

2.5.1 Housing design

Pitch circle diameter G	Round flange F
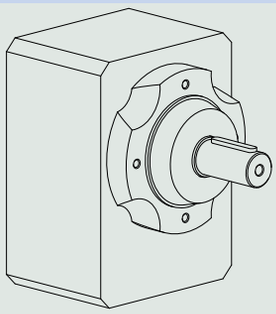	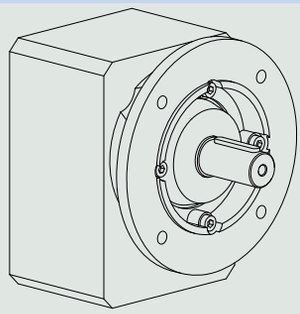

Square flange Q	Foot N
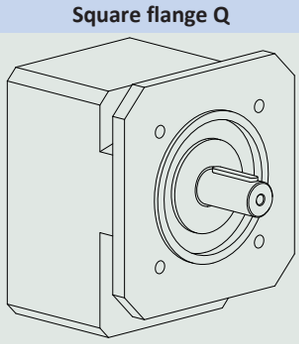	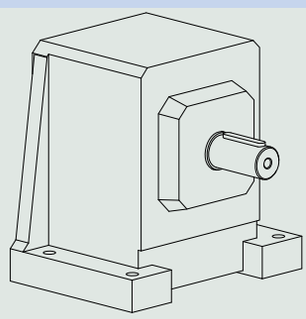

	G	F	Q	N
C0	✓	✓	✓	✓
C1	✓	✓	✓	✓
C2	✓	✓	✓	✓
C3	✓	✓	✓	✓
C4	✓	✓	✓	✓
C5	✓	✓	–	✓
C6	✓	✓	–	✓
C7	✓	✓	–	✓
C8	✓	✓	–	✓
C9	✓	✓	–	✓

2.5.2 Shaft design

Gear units in sizes C0 – C9 come standard with a solid shaft with feather key.

Gear units in sizes C0 – C5 can be ordered with the option of a solid shaft without feather key. Only upon request starting at size C6.

2.5.3 Installation conditions

Fastening the gear units on the machine side using the pitch circle diameter

The specified torques and forces only apply when fastening gear units at the machine side using screws of quality 10.9. In addition, the gear unit housings must be adjusted at the pilot. The machine-side fit must be H7.

2.5.4 Mounting positions

The following table shows the standard mounting positions.

The numbers identify the gear unit sides. The mounting position is defined by the gear side facing downwards.

EL1 IMB3, IMB5, IMB14, IMB34, IMB35	EL2 IMB8	EL3 IMB7
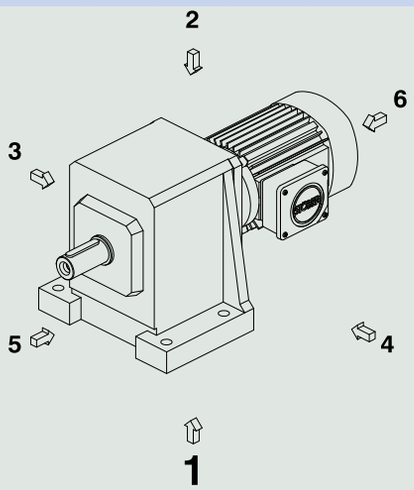	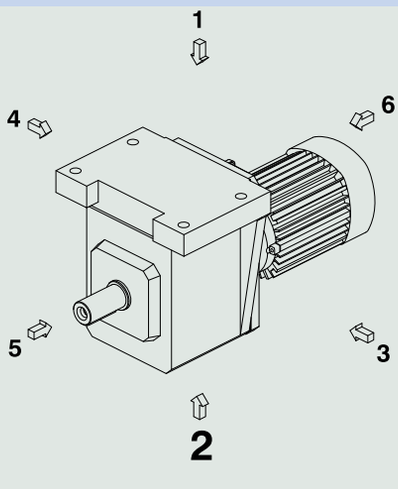	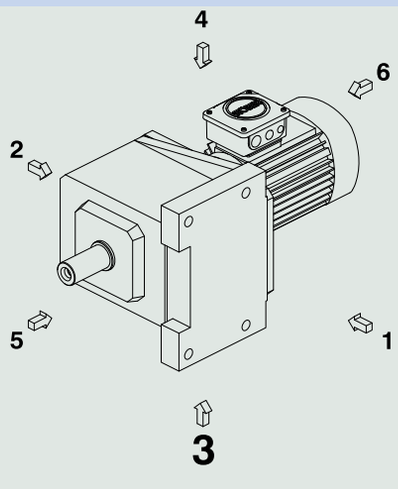
EL4 **IMB6**	**EL5** **IMV1, IMV5, IMV18**	**EL6** **IMV3, IMV6, IMV19**
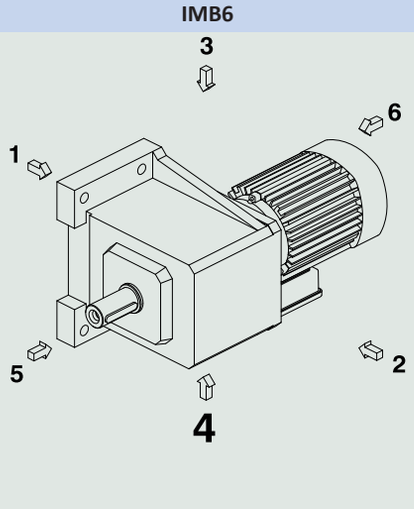	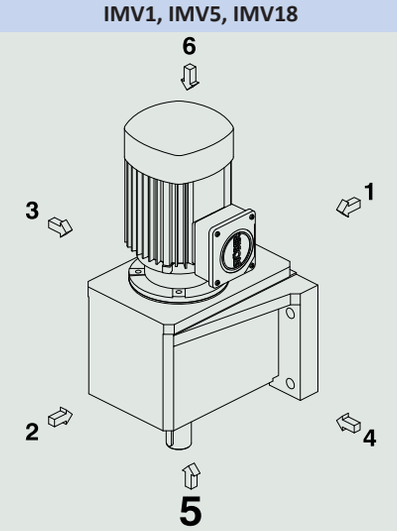	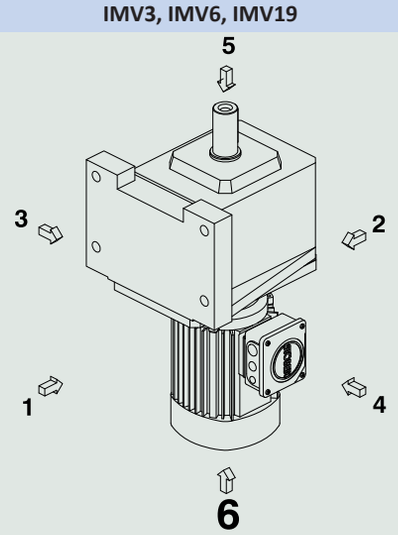

Since the lubricant filling volume of the gear unit depends on the mounting position, the mounting position must be specified when ordering.

2.5.5 Lubricants

STOBER fills the gear units with the amount and type of lubricant specified on the nameplate. The filling volume and the structure of the gear units depend on the mounting position.

Only install the gear units in the intended mounting position! Reposition the gear units only after consulting STOBER. Otherwise, STOBER assumes no liability for the gear units.

2.5.6 Position of the terminal box

Mounting position EL1 Terminal box in the 0° position (standard)	Mounting position EL4 Terminal box in the 0° position (standard)
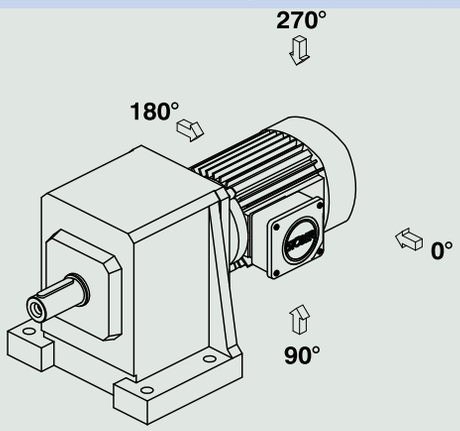	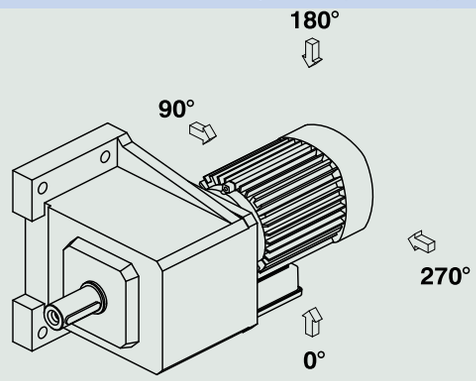

Indicate variations for your geared motor in the purchase order.

Note that the terminal box position rotates along with the geared motor if the geared motor rotates to another mounting position.

2.5.7 Other product features

Feature	Value
Max. permitted gear unit temperature (on the surface of the gear unit)	≤ 80 °C
Paint	RAL 7035 light gray Optional selection of various RAL colors.
(ATEX) Directive 2014/34/EU	You can get asynchronous motors for use in potentially explosive atmospheres on request.
Protection class	IP56

2.5.8 Losses due to splashing

Increased losses due to splashing can occur in individual cases under certain operating conditions. These can lead to oil leakage or unacceptably high operating temperatures.

Please coordinate with STOBER to determine a suitable course of action if:

- The surrounding temperature is under −10 °C or over +40 °C
- The gear unit type meets the following conditions:

Type	Mounting position	n_{1N} [rpm]	ED	i
C6, C7	EL5, EL6	> 2500	> 60%, > 20 min	< 10
C8, C9	EL5, EL6	> 2000	> 60%, > 20 min	< 10

2.5.9 Maintenance

The instructions for maintenance can be found in the operating manual, ID 443027_en, at http://www.stoeber.de/en/downloads/. Enter the ID of the documentation in the Search... field.

Ventilation

Air release valves are fitted as a standard feature and independently of installation position for gear unit sizes C6 to C9.

For the position and dimensions of the air release valve, refer to the 3D model.

Download the 3D model at http://configurator.stoeber.de.

2.5.10 Direction of rotation

C002 – C912	C103 – C913
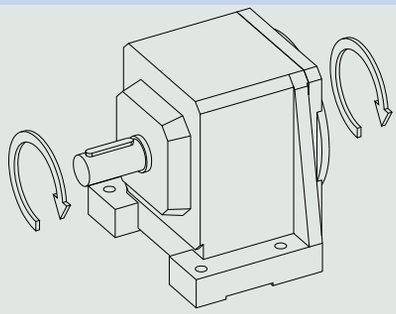	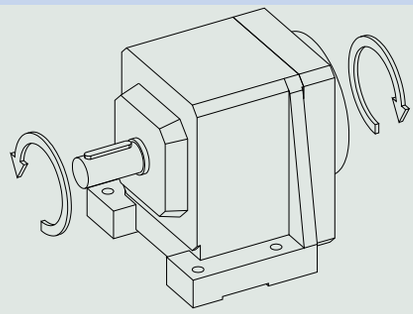
The input and output rotate in the same direction.	The input and output rotate in opposite directions.

The pictures show mounting position EL1.

2.6 Project configuration

Project your drives using the information in this chapter. In doing so, observe the limit conditions in this chapter to ensure a safe design.

An explanation of the formula symbols can be found in Chapter [▷ 13.1]

Determine the following for your application:

- The actual torque M_{2N*}
- The actual speed n_{2*}
- The operating mode operating factor fB_{op}
- The run-time operating factor fB_t
- The motor operating factor fB_{mot}
- The duty cycle ED in %

$$ED = \frac{t_{op}}{T} \cdot 100\%$$

For the S4 and S8 operating mode:

- The mass moment of inertia J_{2*}

$$J_{1*} = \frac{J_{2*}}{i^2}$$

Calculate the motor rating necessary for your application:

$$P_{N*} = \frac{M_{2N*} \cdot n_{2*} \cdot fB_{mot}}{9550}$$

Using the determined values and the calculated motor rating, select a suitable drive from the selection table.

Then check the following conditions:

$$M_{2N*} \cdot fB_{op} \cdot fB_t < M_{2N} \cdot S$$

$$P_N* < P_N$$

Operating factors

Run time	fB_t
Daily run time ≤ 8 h	1.00
Daily run time ≤ 16 h	1.15
Daily run time ≤ 24 h	1.20

Operating mode	Characteristic output curve	ED	fB_{op}	fB_{mot}
S1 Continuous operation with soft start • Start time up to 30 s	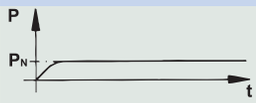	100 %	1.00	1.00
S1 Continuous operation with normal start • Asynchronous motors with direct switch-on or dynamic loading • Start time up to 30 s	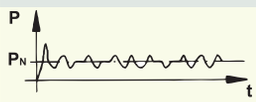	100 %	1.25	1.00
S1 Continuous operation with high-load start • Start time up to 30 s	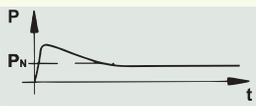	100 %	1.25	1.25
S2 brief operation • Operating time t_{op} ≤ 3 minutes	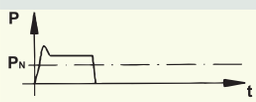	≤ 30 %	0.75	0.75
S3 Periodic cyclic operation	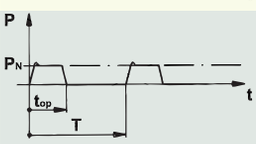	≤ 25 %	0.70	0.70
• Cycle time T ≤ 10 minutes		≤ 40 %	1.00	1.00
• Cyclic operation with braking motor		≤ 60 %	1.25	1.25
• Low additional flywheel weights $J_{1*} < 0,5 \cdot J_1$				
S4 Periodic cyclic operation with the effect of the start-up process • Cycle time T ≤ 10 minutes • Cyclic operation with braking motor • Larger additional flywheel weights	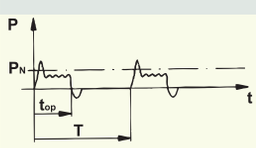	40 %	$J_{1*} \le J_1$: 1.40 $J_{1*} \sim 3 \cdot J_1$: 1.60	1.40
S6 Uninterrupted periodic operation	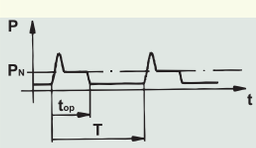	100 %	1.25	1.00
S6 Uninterrupted periodic operation with short-term loading • Low speeds • Low additional flywheel weights $J_{1*} < 0,5 \cdot J_1$	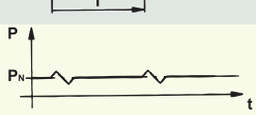	100 %	1.40	1.00
S6 Uninterrupted periodic operation with impact loading • High speeds • Large additional flywheel weights	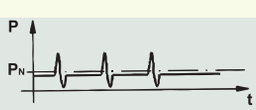	100 %	1.60	1.25
S8 Uninterrupted periodic operation • With load changes • With speed changes	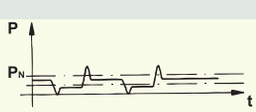	100 %	$J_{1*} \le J_1$: 1.40 $J_{1*} \sim 3 \cdot J_1$: 1.60	$J_{1*} \le J_1$: 1.25 $J_{1*} \sim 3 \cdot J_1$: 1.40
S9 Non-periodic operation • With load changes • With speed changes	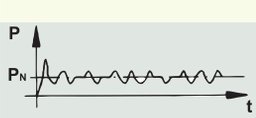	100 %	$J_{1*} \le J_1$: 1.40 $J_{1*} \sim 3 \cdot J_1$: 1.60	$J_{1*} \le J_1$: 1.25 $J_{1*} \sim 3 \cdot J_1$: 1.40
S10 Operation with individual constant loads	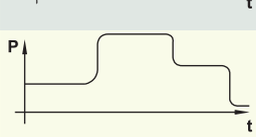	100 %	1.00	1.00

Tab. 1: Operating factors for operating modes S1 to S10

2.6.1 Permitted shaft loads for the output shaft

The values specified in the tables apply to the permitted shaft loads:

- For shaft dimensions in accordance with the catalog
- For output speeds $n_{2m*} \leq 20$ rpm ($F_{2axN} = F_{2ax20}$; $F_{2radN} = F_{2rad20}$; $M_{2kN} = M_{2k20}$)
- Only if radial forces on the gear unit are stabilized by its pilots for the pitch circle diameter and flange housing design

Permitted shaft loads

Type	z_2	F_{2ax20}	F_{2rad20}	$F_{2rad,acc}$	M_{2k20}	$M_{2k,acc}$
	[mm]	[N]	[N]	[N]	[Nm]	[Nm]
C0	20.0	500	1900	1900	80	80
C1	30.0	850	3400	3400	190	190
C2	30.0	1050	4200	4200	260	260
C3	30.0	1400	5650	5650	350	350
C4	35.0	2400	9700	9700	750	750
C5	42.0	3000	11000	11000	900	900
C6	40.0	4000	16000	16000	1500	1500
C7	45.0	5500	22000	22000	2400	2400
C8	50.0	7500	30000	30000	3700	3700
C9	55.0	9500	37000	37000	5200	5200

For other output speeds, download diagrams at http://configurator.stoeber.de.

The following applies to output speeds $n_{2m*} > 20$ rpm:

$$F_{2axN} = \frac{F_{2ax20}}{\sqrt[3]{\frac{n_{2m*}}{20\ \text{rpm}}}} \qquad F_{2radN} = \frac{F_{2rad20}}{\sqrt[3]{\frac{n_{2m*}}{20\ \text{rpm}}}} \qquad M_{2kN} = \frac{M_{2k20}}{\sqrt[3]{\frac{n_{2m*}}{20\ \text{rpm}}}}$$

The values for F_{2ax20}, F_{2rad20} and M_{2k20} can be found in the table "Permitted shaft loads" in this chapter.

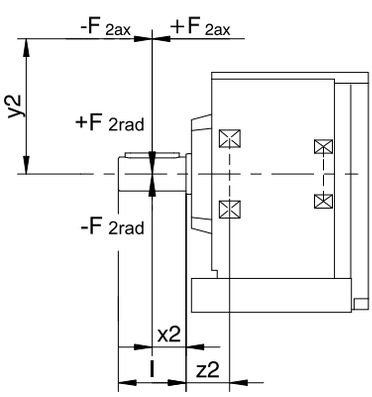

Fig. 1: Force application points

The specified values for F_{2rad20} are based on application of force at the middle of the output shaft: $x_2 = l/2$.

Shaft dimensions can be found in the "Dimensional drawings" chapter.

The following applies to other force application points:

$$M_{2k*} = \frac{2 \cdot F_{2ax*} \cdot y_2 + F_{2rad*} \cdot (x_2 + z_2)}{1000} \leq M_{2kN}$$

$$F_{2rad*} \leq F_{2radN}$$

$$F_{2ax*} \leq F_{2axN}$$

For applications with multiple axial and/or radial forces, you must add the forces as vectors.

In the event of EMERGENCY OFF operation (max. 1000 load changes), you can multiply the permitted forces and torques for F_{2ax20}, F_{2rad20} and M_{2k20} by a factor of two.

2.6.2 Radial shaft seal rings

Leak-proofness

Our gear units are equipped with high-quality radial shaft seal rings and checked for leak-proofness. However, a leak cannot be fully ruled out over the length of use of a gear unit. If you use a gear unit with goods incompatible with the lubricant, you must take measures to prevent direct contact with the gear unit lubricant in case of a leak.

2.6.3 Oil expansion tank

The gear units have a higher fill level in mounting position EL5. The oil expansion tank prevents oil from escaping out of the gear unit.

Notes

- We recommend using an oil expansion tank in mounting position EL5 (additional cost) for fast running gear units with an input speed n_1 > 1750 rpm and gear ratios i < 20.
- It is not possible to use an oil expansion tank if the terminal box is at 90°!
- The oil expansion tank can only be used with certain sizes; see the chapter [▷ 2.3.5]

2.7 Additional documentation

Additional documentation related to the product can be found at http://www.stoeber.de/en/downloads/

Enter the ID of the documentation in the Search... field.

Documentation	ID
Operating manual for C/F/K/S gear units and gear motors	443027_en

3 F offset helical geared motors

Table of contents

3.1 Overview ... 60

3.2 Selection tables ... 61

3.3 Dimensional drawings ... 67

3.3.1 A shaft design (hollow shaft), G housing design (pitch circle diameter) ... 68

3.3.2 A shaft design (hollow shaft), GN housing design (pitch circle diameter + side fastening) ... 70

3.3.3 A shaft design (hollow shaft), F housing design (round flange) ... 72

3.3.4 A shaft design (hollow shaft), Q housing design (square flange) ... 74

3.3.5 V shaft design (solid shaft), F housing design (round flange) ... 76

3.3.6 V shaft design (solid shaft), Q housing design (square flange) ... 78

3.3.7 S shaft design (hollow shaft with shrink disk), G housing design (pitch circle diameter) ... 80

3.3.8 S shaft design (hollow shaft with shrink disk), GN housing design (pitch circle diameter + side fastening) ... 82

3.3.9 S shaft design (hollow shaft with shrink disk), F housing design (round flange) ... 84

3.3.10 S shaft design (hollow shaft with shrink disk), Q housing design (square flange) ... 86

3.4 Type designation ... 88

3.5 Product description ... 89

3.5.1 Housing design ... 89

3.5.2 Combinatorial shaft/housing design ... 89

3.5.3 Installation conditions ... 89

3.5.4 Mounting positions ... 90

3.5.5 Lubricants ... 90

3.5.6 Position of the terminal box ... 91

3.5.7 Other product features ... 91

3.5.8 Direction of rotation ... 91

3.6 Project configuration ... 92

3.6.1 Permitted shaft loads for the output shaft ... 94

3.6.2 Radial shaft seal rings ... 96

3.7 Additional documentation ... 96

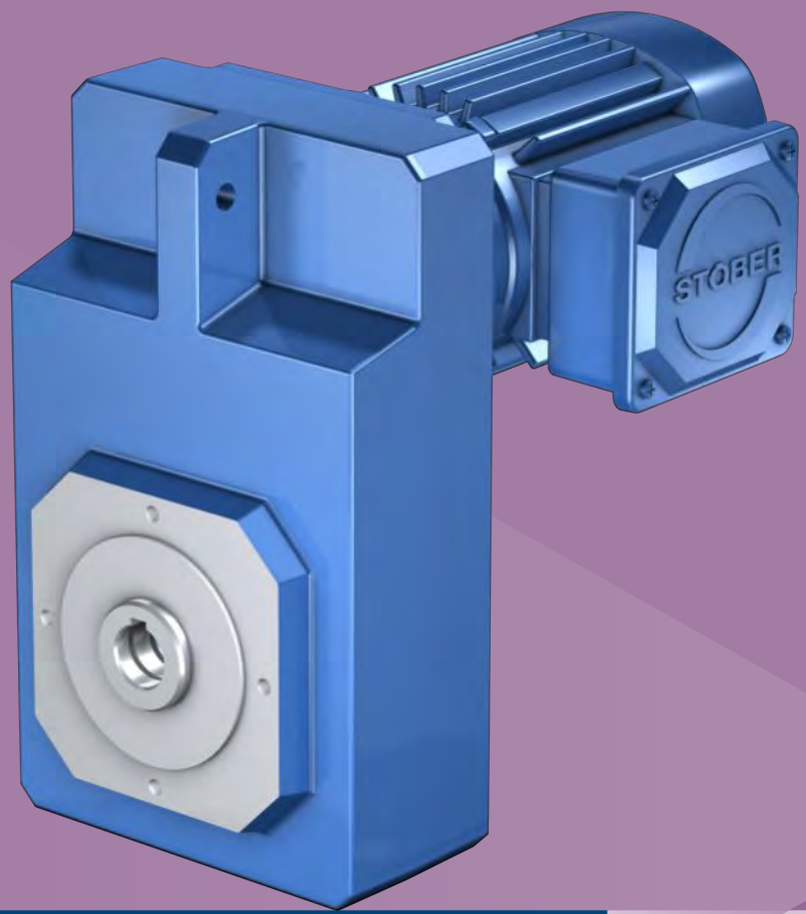

3 Offset helical geared motors F

3.1 Overview

Offset helical geared motors with large axial distances

Features

Power density	★☆☆☆☆
Backlash	★★★☆☆
Price category	€
Shaft load	★★★☆☆
Smooth operation	★★★☆☆
Torsional stiffness	★★☆☆☆
Mass moment of inertia	★★★★★
Helical gearing	✓
Maintenance-free	✓
FKM seal ring at the input	✓
Large axial distances, suitable for confined situations	✓

Key: ★☆☆☆☆ good | ★★★★★ excellent
€ Economy | €€€€€ Premium

Technical data

P_N	0.12 – 7.5 kW
i	4.3 – 440
M_{2N}	5.3 – 1342 Nm
η_{get}	≤ 97 %

3.2 Selection tables

The technical data specified in the selection tables applies to:

- Installation altitudes up to 1000 m above sea level
- Surrounding temperatures from 0 °C to 40 °C
- Drives with self-ventilated motors
- Weight specification for mounting position EL1, housing design G

You can receive asynchronous geared motors with low output speed on request.

Asynchronous geared motors are ideal for operation on a drive controller (87 Hz). More information can be found in chapter [▸ 5.6.2]

An explanation of the formula symbols can be found in the chapter [▸ 13.1].

n_2 50 Hz [rpm]	S 50 Hz	n_2 87 Hz [rpm]	S 87 Hz	M_{2N} [Nm]	Type	m [kg]	i	i_{exakt}	J_1 [10^{-4}kgm²]
P_N (50 Hz) = 0,12 kW, P_N (87 Hz) = 0,21 kW									
9.8	1.1	17	1.1	114	F102_1400 D063K04	16.0	139.8	559/4	1.9
12	1.3	21	1.3	91	F102_1120 D063K04	16.0	111.9	2015/18	1.9
15	1.6	25	1.6	76	F102_0940 D063K04	16.0	93.63	7865/84	1.9
20	2.1	34	2.1	57	F102_0700 D063K04	16.0	70.06	1261/18	1.9
24	2.6	42	2.6	46	F102_0560 D063K04	16.0	55.97	2015/36	2.0
30	3.2	51	3.2	38	F102_0460 D063K04	16.0	46.43	325/7	2.0
39	3.3	68	3.3	29	F102_0350 D063K04	16.0	35.05	3575/102	2.0
49	3.3	84	3.3	23	F102_0280 D063K04	16.0	28.17	169/6	2.1
74	3.3	129	3.3	15	F102_0185 D063K04	16.0	18.46	1495/81	2.2
101	3.3	175	3.3	11	F102_0135 D063K04	16.0	13.59	231/17	2.1
125	3.3	217	3.3	8.9	F102_0110 D063K04	16.0	10.92	273/25	2.2
P_N (50 Hz) = 0,18 kW, P_N (87 Hz) = 0,31 kW									
3.7	0.91	6.4	0.91	442	F303_3670 D063M04	37.1	366.8	99029/270	2.5
4.9	1.2	8.5	1.2	332	F303_2760 D063M04	37.1	275.6	32242/117	2.5
6.1	0.90	11	0.90	268	F203_2220 D063M04	27.5	222.2	2444/11	2.5
6.1	1.5	11	1.5	266	F303_2210 D063M04	37.1	221.2	191149/864	2.5
7.4	1.8	13	1.8	223	F303_1850 D063M04	37.1	184.8	29939/162	2.5
7.4	1.1	13	1.1	222	F203_1840 D063M04	27.5	184.3	16215/88	2.5
12	0.88	21	0.88	137	F102_1120 D063M04	16.4	111.9	2015/18	2.4
15	1.0	25	1.0	114	F102_0940 D063M04	16.4	93.63	7865/84	2.4
14	1.6	25	1.6	115	F202_0940 D063M04	24.6	93.82	1032/11	2.5
19	1.4	34	1.4	86	F102_0700 D063M04	16.4	70.06	1261/18	2.4
24	1.8	42	1.8	68	F102_0560 D063M04	16.4	55.97	2015/36	2.5
29	2.1	51	2.1	57	F102_0460 D063M04	16.4	46.43	325/7	2.5
39	2.2	67	2.2	43	F102_0350 D063M04	16.4	35.05	3575/102	2.5
48	2.2	84	2.2	34	F102_0280 D063M04	16.4	28.17	169/6	2.6
74	2.2	128	2.2	23	F102_0185 D063M04	16.4	18.46	1495/81	2.7
100	2.2	173	2.2	17	F102_0135 D063M04	16.4	13.59	231/17	2.6
125	2.2	216	2.2	13	F102_0110 D063M04	16.4	10.92	273/25	2.7
190	2.2	329	2.2	8.7	F102_0072 D063M04	16.4	7.156	322/45	3.0
P_N (50 Hz) = 0,25 kW, P_N (87 Hz) = 0,43 kW									
3.2	0.97	5.5	0.97	723	F403_4400 D071K04	46.3	439.7	58045/132	4.1
3.8	1.2	6.6	1.2	601	F403_3660 D071K04	46.3	365.6	3290/9	4.1
5.0	0.88	8.7	0.88	453	F303_2760 D071K04	38.7	275.6	32242/117	4.1
5.0	1.6	8.7	1.6	451	F403_2740 D071K04	46.3	274.4	59267/216	4.1
6.3	1.1	11	1.1	364	F303_2210 D071K04	38.7	221.2	191149/864	4.1
6.3	1.9	11	1.9	360	F403_2190 D071K04	46.3	219.2	94705/432	4.1
7.5	1.3	13	1.3	304	F303_1850 D071K04	38.7	184.8	29939/162	4.1
7.5	2.3	13	2.3	302	F403_1840 D071K04	46.3	183.9	39715/216	4.1
9.8	1.0	17	1.0	235	F202_1410 D071K04	26.2	140.9	1550/11	4.0
9.8	1.7	17	1.7	235	F302_1410 D071K04	33.8	140.6	7595/54	4.1
12	1.3	21	1.3	188	F202_1130 D071K04	26.2	112.7	1240/11	4.1
15	1.5	26	1.5	157	F202_0940 D071K04	26.2	93.82	1032/11	4.1
20	1.0	34	1.0	117	F102_0700 D071K04	18.0	70.06	1261/18	4.0
20	2.1	34	2.1	117	F202_0700 D071K04	26.2	70.13	5400/77	4.1
25	1.3	43	1.3	93	F102_0560 D071K04	18.0	55.97	2015/36	4.1
29	3.1	51	3.1	78	F202_0470 D071K04	26.2	47.05	1035/22	4.2
30	1.5	52	1.5	77	F102_0460 D071K04	18.0	46.43	325/7	4.1
40	2.1	68	2.0	58	F102_0350 D071K04	18.0	35.05	3575/102	4.1
49	2.6	85	2.3	47	F102_0280 D071K04	18.0	28.17	169/6	4.2

n_2 50 Hz [rpm]	S 50 Hz	n_2 87 Hz [rpm]	S 87 Hz	M_{2N} [Nm]	Type	m [kg]	i	i_{exakt}	J_1 [10^{-4}kgm²]
P_N (50 Hz) = 0,25 kW, P_N (87 Hz) = 0,43 kW									
60	3.1	104	2.7	39	F102_0230 D071K04	18.0	23.08	3185/138	4.2
75	3.5	130	3.1	31	F102_0185 D071K04	18.0	18.46	1495/81	4.3
102	3.5	177	3.5	23	F102_0135 D071K04	18.0	13.59	231/17	4.2
127	3.5	220	3.5	18	F102_0110 D071K04	18.0	10.92	273/25	4.3
154	3.5	266	3.5	15	F202_0090 D071K04	26.2	9.006	3161/351	5.3
155	3.5	268	3.5	15	F102_0089 D071K04	18.0	8.948	1029/115	4.4
194	3.5	335	3.5	12	F102_0072 D071K04	18.0	7.156	322/45	4.6
321	3.5	557	3.5	7.2	F102_0043 D071K04	18.0	4.308	56/13	5.5
P_N (50 Hz) = 0,37 kW, P_N (87 Hz) = 0,64 kW									
5.0	1.0	8.6	1.0	677	F403_2740 D071L04	47.3	274.4	59267/216	5.1
6.2	1.3	11	1.3	541	F403_2190 D071L04	47.3	219.2	94705/432	5.1
7.4	0.88	13	0.88	456	F303_1850 D071L04	39.7	184.8	29939/162	5.1
7.5	1.5	13	1.5	454	F403_1840 D071L04	47.3	183.9	39715/216	5.1
9.7	1.1	17	1.1	352	F302_1410 D071L04	34.8	140.6	7595/54	5.1
12	0.85	21	0.85	282	F202_1130 D071L04	27.2	112.7	1240/11	5.1
15	1.0	25	1.0	235	F202_0940 D071L04	27.2	93.82	1032/11	5.1
20	1.4	34	1.4	176	F202_0700 D071L04	27.2	70.13	5400/77	5.1
24	0.86	42	0.86	140	F102_0560 D071L04	19.0	55.97	2015/36	5.1
29	2.0	50	2.0	118	F202_0470 D071L04	27.2	47.05	1035/22	5.2
30	1.0	51	1.0	116	F102_0460 D071L04	19.0	46.43	325/7	5.1
39	1.4	68	1.4	88	F102_0350 D071L04	19.0	35.05	3575/102	5.1
39	2.3	67	2.3	89	F202_0350 D071L04	27.2	35.46	390/11	5.4
49	1.7	84	1.6	70	F102_0280 D071L04	19.0	28.17	169/6	5.2
59	2.1	103	1.8	58	F102_0230 D071L04	19.0	23.08	3185/138	5.2
74	2.3	129	2.1	46	F102_0185 D071L04	19.0	18.46	1495/81	5.3
101	2.3	175	2.3	34	F102_0135 D071L04	19.0	13.59	231/17	5.2
125	2.3	217	2.3	27	F102_0110 D071L04	19.0	10.92	273/25	5.3
152	2.3	263	2.3	23	F202_0090 D071L04	27.2	9.006	3161/351	6.3
153	2.3	265	2.3	22	F102_0089 D071L04	19.0	8.948	1029/115	5.4
191	2.3	332	2.3	18	F102_0072 D071L04	19.0	7.156	322/45	5.6
318	2.3	551	2.3	11	F102_0043 D071L04	19.0	4.308	56/13	6.5
388	4.7	–	–	8.8	F102_0072 D071K02	17.9	7.156	322/45	3.1
645	4.7	–	–	5.3	F102_0043 D071K02	17.9	4.308	56/13	4.0
P_N (50 Hz) = 0,55 kW, P_N (87 Hz) = 0,95 kW									
3.9	0.85	6.7	0.85	1294	F603_3610 D080K04	77.4	360.9	3248/9	8.9
5.2	1.1	9.0	1.1	965	F603_2690 D080K04	77.4	269.3	1885/7	8.9
6.5	0.90	11	0.90	776	F403_2160 D080K04	50.1	216.4	11687/54	8.9
6.5	1.4	11	1.4	772	F603_2150 D080K04	77.4	215.4	1508/7	9.0
7.7	1.1	13	1.1	651	F403_1820 D080K04	50.1	181.5	4901/27	8.9
7.8	1.7	13	1.7	648	F603_1810 D080K04	77.4	180.6	8671/48	9.0
10	1.4	17	1.4	508	F402_1400 D080K04	45.9	139.8	559/4	8.8
12	0.97	21	0.97	410	F302_1130 D080K04	37.6	112.8	3724/33	8.8
15	1.2	26	1.2	341	F302_0940 D080K04	37.6	93.64	4214/45	8.9
15	2.1	26	2.1	339	F402_0930 D080K04	45.9	93.33	280/3	9.0
20	0.94	35	0.94	255	F202_0700 D080K04	30.0	70.13	5400/77	8.8
20	1.6	34	1.6	256	F302_0700 D080K04	37.6	70.36	2744/39	9.0
25	1.2	43	1.2	206	F202_0570 D080K04	30.0	56.73	624/11	8.9
25	1.9	43	1.9	205	F302_0560 D080K04	37.6	56.49	4067/72	9.1
25	3.2	43	3.2	204	F402_0560 D080K04	45.9	55.97	2015/36	9.3
30	1.4	52	1.4	171	F202_0470 D080K04	30.0	47.05	1035/22	8.9
30	2.3	51	2.3	172	F302_0470 D080K04	37.6	47.19	1274/27	9.2
40	0.94	69	0.92	127	F102_0350 D080K04	21.8	35.05	3575/102	8.8
39	1.9	68	1.8	129	F202_0350 D080K04	30.0	35.46	390/11	9.1
40	3.1	69	3.1	127	F302_0350 D080K04	37.6	35.03	7252/207	9.4
50	1.2	86	1.1	102	F102_0280 D080K04	21.8	28.17	169/6	8.9
50	2.3	86	2.1	102	F202_0280 D080K04	30.0	28.11	4020/143	9.2
61	1.4	105	1.2	84	F102_0230 D080K04	21.8	23.08	3185/138	8.9
60	2.8	103	2.4	85	F202_0230 D080K04	30.0	23.43	2320/99	9.4
76	1.7	131	1.4	67	F102_0185 D080K04	21.8	18.46	1495/81	9.0
75	3.2	130	2.8	68	F202_0185 D080K04	30.0	18.65	6360/341	9.6
103	2.0	178	1.7	49	F102_0135 D080K04	21.8	13.59	231/17	8.9
128	2.4	222	2.0	40	F102_0110 D080K04	21.8	10.92	273/25	9.0
155	3.2	269	3.2	33	F202_0090 D080K04	30.0	9.006	3161/351	10
156	2.7	271	2.3	33	F102_0089 D080K04	21.8	8.948	1029/115	9.1
196	3.1	339	2.7	26	F102_0072 D080K04	21.8	7.156	322/45	9.3

n_2 50 Hz [rpm]	S 50 Hz	n_2 87 Hz [rpm]	S 87 Hz	M_{2N} [Nm]	Type	m [kg]	i	i_{exakt}	J_1 [10^{-4}kgm²]
P_N (50 Hz) = 0,55 kW, P_N (87 Hz) = 0,95 kW									
217	3.2	375	2.8	24	F102_0065 D080K04	21.8	6.462	84/13	9.5
325	3.2	563	3.2	16	F102_0043 D080K04	21.8	4.308	56/13	10
388	3.2	–	–	13	F102_0072 D071L02	18.8	7.156	322/45	3.8
644	3.2	–	–	7.9	F102_0043 D071L02	18.8	4.308	56/13	4.7
P_N (50 Hz) = 0,75 kW, P_N (87 Hz) = 1,30 kW									
5.4	0.86	9.3	0.86	1287	F603_2690 IE3D080L04	83.8	269.3	1885/7	26
6.7	1.1	12	1.1	1030	F603_2150 IE3D080L04	83.8	215.4	1508/7	26
8.0	0.81	14	0.81	868	F403_1820 IE3D080L04	56.5	181.5	4901/27	26
8.0	1.3	14	1.3	863	F603_1810 IE3D080L04	83.8	180.6	8671/48	26
10	1.0	18	1.0	678	F402_1400 IE3D080L04	52.3	139.8	559/4	26
10	1.6	18	1.6	678	F602_1400 IE3D080L04	79.3	139.8	559/4	26
13	1.3	22	1.3	545	F402_1120 IE3D080L04	52.3	112.3	1235/11	26
13	2.0	22	2.0	544	F602_1120 IE3D080L04	79.3	112.2	9425/84	26
15	0.88	27	0.88	454	F302_0940 IE3D080L04	44.0	93.64	4214/45	26
15	1.5	27	1.5	453	F402_0930 IE3D080L04	52.3	93.33	280/3	26
15	2.4	27	2.4	453	F602_0930 IE3D080L04	79.3	93.33	280/3	27
21	1.2	36	1.2	341	F302_0700 IE3D080L04	44.0	70.36	2744/39	26
21	2.1	36	2.1	340	F402_0700 IE3D080L04	52.3	70.06	1261/18	26
25	0.87	44	0.87	275	F202_0570 IE3D080L04	36.4	56.73	624/11	26
26	1.5	44	1.5	274	F302_0560 IE3D080L04	44.0	56.49	4067/72	26
26	2.6	45	2.6	271	F402_0560 IE3D080L04	52.3	55.97	2015/36	27
31	1.1	53	1.1	228	F202_0470 IE3D080L04	36.4	47.05	1035/22	26
31	1.7	53	1.7	229	F302_0470 IE3D080L04	44.0	47.19	1274/27	26
31	3.1	53	3.1	228	F402_0470 IE3D080L04	52.3	46.94	845/18	27
41	1.4	71	1.4	172	F202_0350 IE3D080L04	36.4	35.46	390/11	26
41	2.4	71	2.3	170	F302_0350 IE3D080L04	44.0	35.03	7252/207	27
51	0.88	–	–	137	F102_0280 IE3D080L04	28.2	28.17	169/6	26
51	1.8	89	1.6	136	F202_0280 IE3D080L04	36.4	28.11	4020/143	27
51	2.9	89	2.6	137	F302_0280 IE3D080L04	44.0	28.23	6860/243	27
61	3.5	106	3.0	114	F302_0240 IE3D080L04	44.0	23.52	588/25	27
63	1.1	108	0.90	112	F102_0230 IE3D080L04	28.2	23.08	3185/138	26
62	2.1	107	1.8	114	F202_0230 IE3D080L04	36.4	23.43	2320/99	27
78	1.2	136	1.0	90	F102_0185 IE3D080L04	28.2	18.46	1495/81	26
77	2.5	134	2.1	90	F202_0185 IE3D080L04	36.4	18.65	6360/341	27
106	1.5	184	1.3	66	F102_0135 IE3D080L04	28.2	13.59	231/17	26
106	3.0	184	2.6	66	F202_0135 IE3D080L04	36.4	13.63	109/8	27
132	1.8	229	1.5	53	F102_0110 IE3D080L04	28.2	10.92	273/25	26
134	3.5	232	3.0	52	F202_0110 IE3D080L04	36.4	10.80	7303/676	27
160	4.0	278	3.4	44	F202_0090 IE3D080L04	36.4	9.006	3161/351	27
161	2.0	280	1.7	43	F102_0089 IE3D080L04	28.2	8.948	1029/115	26
202	2.3	350	2.0	35	F102_0072 IE3D080L04	28.2	7.156	322/45	27
224	2.5	387	2.1	31	F102_0065 IE3D080L04	28.2	6.462	84/13	27
309	4.8	535	4.8	23	F202_0047 IE3D080L04	36.4	4.680	2616/559	30
335	3.3	581	2.8	21	F102_0043 IE3D080L04	28.2	4.308	56/13	28
401	3.8	–	–	17	F102_0072 IE3D080K02	22.7	7.156	322/45	7.8
444	4.0	–	–	16	F102_0065 IE3D080K02	22.7	6.462	84/13	8.0
613	9.6	–	–	11	F202_0047 IE3D080K02	30.9	4.680	2616/559	11
666	5.3	–	–	10	F102_0043 IE3D080K02	22.7	4.308	56/13	8.7
P_N (50 Hz) = 1,10 kW, P_N (87 Hz) = 1,91 kW									
8.0	0.87	14	0.87	1261	F603_1810 IE3D090S04	89.3	180.6	8671/48	40
10	1.1	18	1.1	990	F602_1400 IE3D090S04	84.8	139.8	559/4	40
13	0.88	22	0.88	795	F402_1120 IE3D090S04	57.8	112.3	1235/11	40
13	1.4	22	1.4	795	F602_1120 IE3D090S04	84.8	112.2	9425/84	40
15	1.1	27	1.1	661	F402_0930 IE3D090S04	57.8	93.33	280/3	40
15	1.7	27	1.7	661	F602_0930 IE3D090S04	84.8	93.33	280/3	41
20	0.80	35	0.80	498	F302_0700 IE3D090S04	49.5	70.36	2744/39	40
21	1.4	36	1.4	496	F402_0700 IE3D090S04	57.8	70.06	1261/18	40
21	2.2	36	2.2	493	F602_0700 IE3D090S04	84.8	69.64	975/14	41
25	1.0	44	1.0	400	F302_0560 IE3D090S04	49.5	56.49	4067/72	40
26	1.8	45	1.8	396	F402_0560 IE3D090S04	57.8	55.97	2015/36	41
31	1.2	53	1.2	334	F302_0470 IE3D090S04	49.5	47.19	1274/27	40
31	2.1	53	2.1	332	F402_0470 IE3D090S04	57.8	46.94	845/18	41
41	0.96	70	0.93	251	F202_0350 IE3D090S04	41.9	35.46	390/11	40
41	1.6	71	1.6	248	F302_0350 IE3D090S04	49.5	35.03	7252/207	41
51	1.2	89	1.1	199	F202_0280 IE3D090S04	41.9	28.11	4020/143	41

n_2 50 Hz [rpm]	S 50 Hz	n_2 87 Hz [rpm]	S 87 Hz	M_{2N} [Nm]	Type	m [kg]	i	i_{exakt}	J_1 [10^{-4}kgm²]
P_N (50 Hz) = 1,10 kW, P_N (87 Hz) = 1,91 kW									
51	2.0	88	1.8	200	F302_0280 IE3D090S04	49.5	28.23	6860/243	41
61	2.4	106	2.0	167	F302_0240 IE3D090S04	49.5	23.52	588/25	41
61	1.4	106	1.2	166	F202_0230 IE3D090S04	41.9	23.43	2320/99	41
78	0.85	–	–	131	F102_0185 IE3D090S04	33.7	18.46	1495/81	40
77	1.7	134	1.4	132	F202_0185 IE3D090S04	41.9	18.65	6360/341	41
106	1.0	184	0.88	96	F102_0135 IE3D090S04	33.7	13.59	231/17	40
106	2.1	183	1.8	96	F202_0135 IE3D090S04	41.9	13.63	109/8	41
132	1.2	228	1.0	77	F102_0110 IE3D090S04	33.7	10.92	273/25	40
133	2.4	231	2.0	76	F202_0110 IE3D090S04	41.9	10.80	7303/676	41
160	2.7	277	2.3	64	F202_0090 IE3D090S04	41.9	9.006	3161/351	41
161	1.4	279	1.2	63	F102_0089 IE3D090S04	33.7	8.948	1029/115	40
201	1.6	349	1.4	51	F102_0072 IE3D090S04	33.7	7.156	322/45	41
201	3.2	348	2.7	51	F202_0072 IE3D090S04	41.9	7.167	5777/806	42
223	1.7	386	1.4	46	F102_0065 IE3D090S04	33.7	6.462	84/13	41
308	3.3	533	3.3	33	F202_0047 IE3D090S04	41.9	4.680	2616/559	44
334	2.2	579	1.9	31	F102_0043 IE3D090S04	33.7	4.308	56/13	42
403	2.6	–	–	25	F102_0072 IE3D080LX02	29.2	7.156	322/45	18
446	2.8	–	–	23	F102_0065 IE3D080LX02	29.2	6.462	84/13	18
616	6.7	–	–	16	F202_0047 IE3D080LX02	37.4	4.680	2616/559	21
670	3.7	–	–	15	F102_0043 IE3D080LX02	29.2	4.308	56/13	19
P_N (50 Hz) = 1,50 kW, P_N (87 Hz) = 2,60 kW									
10	0.83	18	0.83	1328	F602_1400 IE3D090LX04	93.3	139.8	559/4	58
13	1.0	22	1.0	1067	F602_1120 IE3D090LX04	93.3	112.2	9425/84	58
16	1.2	27	1.2	887	F602_0930 IE3D090LX04	93.3	93.33	280/3	59
21	1.1	36	1.1	666	F402_0700 IE3D090LX04	66.3	70.06	1261/18	58
21	1.7	36	1.7	662	F602_0700 IE3D090LX04	93.3	69.64	975/14	59
26	1.3	45	1.3	532	F402_0560 IE3D090LX04	66.3	55.97	2015/36	59
31	0.89	53	0.89	449	F302_0470 IE3D090LX04	58.0	47.19	1274/27	58
31	1.6	54	1.6	446	F402_0470 IE3D090LX04	66.3	46.94	845/18	59
42	1.2	72	1.2	333	F302_0350 IE3D090LX04	58.0	35.03	7252/207	59
52	0.90	90	0.80	267	F202_0280 IE3D090LX04	50.4	28.11	4020/143	59
52	1.5	89	1.3	268	F302_0280 IE3D090LX04	58.0	28.23	6860/243	59
62	1.8	107	1.5	224	F302_0240 IE3D090LX04	58.0	23.52	588/25	59
62	1.1	108	0.91	223	F202_0230 IE3D090LX04	50.4	23.43	2320/99	59
78	1.3	135	1.1	177	F202_0185 IE3D090LX04	50.4	18.65	6360/341	59
107	1.5	185	1.3	130	F202_0135 IE3D090LX04	50.4	13.63	109/8	59
109	2.4	188	2.2	127	F302_0135 IE3D090LX04	58.0	13.38	7696/575	59
133	0.90	–	–	104	F102_0110 IE3D090LX04	42.2	10.92	273/25	58
135	1.8	233	1.5	103	F202_0110 IE3D090LX04	50.4	10.80	7303/676	59
135	2.4	234	2.4	103	F302_0110 IE3D090LX04	58.0	10.79	1456/135	60
162	2.0	280	1.7	86	F202_0090 IE3D090LX04	50.4	9.006	3161/351	59
163	1.0	282	0.87	85	F102_0089 IE3D090LX04	42.2	8.948	1029/115	58
203	1.2	352	1.0	68	F102_0072 IE3D090LX04	42.2	7.156	322/45	59
203	2.4	352	2.0	68	F202_0072 IE3D090LX04	50.4	7.167	5777/806	60
225	1.3	390	1.1	61	F102_0065 IE3D090LX04	42.2	6.462	84/13	59
311	2.4	538	2.4	44	F202_0047 IE3D090LX04	50.4	4.680	2616/559	62
338	1.7	585	1.4	41	F102_0043 IE3D090LX04	42.2	4.308	56/13	60
405	1.9	–	–	34	F102_0072 IE3D090S02	30.2	7.156	322/45	18
405	3.8	–	–	34	F202_0072 IE3D090S02	38.4	7.167	5777/806	19
449	2.1	–	–	31	F102_0065 IE3D090S02	30.2	6.462	84/13	18
620	4.9	–	–	22	F202_0047 IE3D090S02	38.4	4.680	2616/559	21
673	2.7	–	–	20	F102_0043 IE3D090S02	30.2	4.308	56/13	19
P_N (50 Hz) = 2,20 kW, P_N (87 Hz) = 3,81 kW									
16	0.84	27	0.84	1313	F602_0930 IE3D100KX04	107.3	93.33	280/3	111
21	1.1	36	1.1	980	F602_0700 IE3D100KX04	107.3	69.64	975/14	111
26	0.89	45	0.89	787	F402_0560 IE3D100KX04	80.3	55.97	2015/36	111
26	1.4	45	1.4	784	F602_0560 IE3D100KX04	107.3	55.71	390/7	111
31	1.1	53	1.1	660	F402_0470 IE3D100KX04	80.3	46.94	845/18	111
31	1.7	54	1.7	657	F602_0470 IE3D100KX04	107.3	46.72	1495/32	112
41	0.81	–	–	493	F302_0350 IE3D100KX04	72.0	35.03	7252/207	111
41	1.4	72	1.3	493	F402_0350 IE3D100KX04	80.3	35.08	2210/63	111
41	2.2	71	2.1	495	F602_0350 IE3D100KX04	107.3	35.21	845/24	113
51	1.0	89	0.90	397	F302_0280 IE3D100KX04	72.0	28.23	6860/243	111
52	1.8	90	1.5	394	F402_0280 IE3D100KX04	80.3	27.99	2015/72	112
52	2.8	90	2.5	394	F602_0280 IE3D100KX04	107.3	27.99	2015/72	114

n_2 50 Hz [rpm]	S 50 Hz	n_2 87 Hz [rpm]	S 87 Hz	M_{2N} [Nm]	Type	m [kg]	i	i_{exakt}	J_1 [10^{-4}kgm²]
P_N (50 Hz) = 2,20 kW, P_N (87 Hz) = 3,81 kW									
62	1.2	107	1.0	331	F302_0240 IE3D100KX04	72.0	23.52	588/25	111
62	2.0	108	1.7	327	F402_0230 IE3D100KX04	80.3	23.21	325/14	112
77	1.4	134	1.2	264	F302_0190 IE3D100KX04	72.0	18.77	4900/261	112
78	0.85	–	–	262	F202_0185 IE3D100KX04	64.4	18.65	6360/341	111
78	2.3	135	2.0	262	F402_0185 IE3D100KX04	80.3	18.62	3575/192	113
106	1.0	184	0.88	192	F202_0135 IE3D100KX04	64.4	13.63	109/8	111
108	1.8	188	1.5	188	F302_0135 IE3D100KX04	72.0	13.38	7696/575	111
107	2.9	185	2.4	191	F402_0135 IE3D100KX04	80.3	13.57	5984/441	112
134	1.2	232	1.0	152	F202_0110 IE3D100KX04	64.4	10.80	7303/676	111
134	2.0	233	1.7	152	F302_0110 IE3D100KX04	72.0	10.79	1456/135	112
161	1.4	279	1.2	127	F202_0090 IE3D100KX04	64.4	9.006	3161/351	111
161	2.3	279	1.9	126	F302_0090 IE3D100KX04	72.0	8.986	5616/625	113
202	1.6	350	1.4	101	F202_0072 IE3D100KX04	64.4	7.167	5777/806	112
202	2.7	350	2.2	101	F302_0072 IE3D100KX04	72.0	7.172	208/29	114
253	3.1	439	2.6	80	F302_0057 IE3D100KX04	72.0	5.720	143/25	116
261	1.9	452	1.6	78	F202_0056 IE3D100KX04	64.4	5.552	5341/962	113
310	2.1	537	1.8	66	F202_0047 IE3D100KX04	64.4	4.680	2616/559	114
312	3.6	541	3.0	65	F302_0046 IE3D100KX04	72.0	4.644	4992/1075	118
320	2.2	–	–	64	F202_0090 IE3D090L02	42.9	9.006	3161/351	29
322	1.1	–	–	63	F102_0089 IE3D090L02	34.7	8.948	1029/115	28
402	1.3	–	–	51	F102_0072 IE3D090L02	34.7	7.156	322/45	28
402	2.6	–	–	51	F202_0072 IE3D090L02	42.9	7.167	5777/806	29
446	1.4	–	–	46	F102_0065 IE3D090L02	34.7	6.462	84/13	28
615	3.3	–	–	33	F202_0047 IE3D090L02	42.9	4.680	2616/559	32
669	1.8	–	–	31	F102_0043 IE3D090L02	34.7	4.308	56/13	29
P_N (50 Hz) = 3,00 kW, P_N (87 Hz) = 5,20 kW									
21	0.82	36	0.82	1338	F602_0700 IE3D100LX04	112.3	69.64	975/14	131
26	1.0	45	1.0	1070	F602_0560 IE3D100LX04	112.3	55.71	390/7	131
31	1.2	54	1.2	897	F602_0470 IE3D100LX04	112.3	46.72	1495/32	132
41	1.0	72	0.94	674	F402_0350 IE3D100LX04	85.3	35.08	2210/63	131
41	1.6	71	1.6	676	F602_0350 IE3D100LX04	112.3	35.21	845/24	133
52	1.3	90	1.1	537	F402_0280 IE3D100LX04	85.3	27.99	2015/72	132
52	2.0	90	1.8	537	F602_0280 IE3D100LX04	112.3	27.99	2015/72	134
62	0.89	–	–	452	F302_0240 IE3D100LX04	77.0	23.52	588/25	131
62	1.5	108	1.2	446	F402_0230 IE3D100LX04	85.3	23.21	325/14	132
62	2.5	108	2.1	447	F602_0230 IE3D100LX04	112.3	23.27	1885/81	135
77	1.0	134	0.87	361	F302_0190 IE3D100LX04	77.0	18.77	4900/261	132
78	1.7	135	1.4	358	F402_0185 IE3D100LX04	85.3	18.62	3575/192	133
108	1.3	188	1.1	257	F302_0135 IE3D100LX04	77.0	13.38	7696/575	131
107	2.1	185	1.8	261	F402_0135 IE3D100LX04	85.3	13.57	5984/441	132
134	0.89	–	–	207	F202_0110 IE3D100LX04	69.4	10.80	7303/676	131
134	1.5	233	1.3	207	F302_0110 IE3D100LX04	77.0	10.79	1456/135	132
134	2.5	232	2.1	208	F402_0110 IE3D100LX04	85.3	10.83	682/63	133
161	1.0	279	0.85	173	F202_0090 IE3D100LX04	69.4	9.006	3161/351	131
161	1.7	279	1.4	173	F302_0090 IE3D100LX04	77.0	8.986	5616/625	133
161	2.8	280	2.3	172	F402_0090 IE3D100LX04	85.3	8.980	440/49	135
202	1.2	350	0.99	138	F202_0072 IE3D100LX04	69.4	7.167	5777/806	132
202	2.0	350	1.6	138	F302_0072 IE3D100LX04	77.0	7.172	208/29	134
201	3.0	349	2.7	138	F402_0072 IE3D100LX04	85.3	7.202	605/84	137
253	2.3	439	1.9	110	F302_0057 IE3D100LX04	77.0	5.720	143/25	136
261	1.4	452	1.2	107	F202_0056 IE3D100LX04	69.4	5.552	5341/962	133
310	1.6	537	1.3	90	F202_0047 IE3D100LX04	69.4	4.680	2616/559	134
312	2.6	541	2.2	89	F302_0046 IE3D100LX04	77.0	4.644	4992/1075	138
324	1.6	–	–	86	F202_0090 IE3D100L02	50.4	9.006	3161/351	46
325	2.7	–	–	85	F302_0090 IE3D100L02	58.0	8.986	5616/625	48
407	1.9	–	–	68	F202_0072 IE3D100L02	50.4	7.167	5777/806	47
407	3.2	–	–	68	F302_0072 IE3D100L02	58.0	7.172	208/29	49
510	3.7	–	–	54	F302_0057 IE3D100L02	58.0	5.720	143/25	51
526	2.3	–	–	53	F202_0056 IE3D100L02	50.4	5.552	5341/962	48
624	2.5	–	–	44	F202_0047 IE3D100L02	50.4	4.680	2616/559	49
629	4.2	–	–	44	F302_0046 IE3D100L02	58.0	4.644	4992/1075	53
P_N (50 Hz) = 4,00 kW, P_N (87 Hz) = 6,93 kW									
31	0.93	54	0.93	1183	F602_0470 IE3D112M04	118.3	46.72	1495/32	172
42	1.2	72	1.2	891	F602_0350 IE3D112M04	118.3	35.21	845/24	173
52	0.99	91	0.83	709	F402_0280 IE3D112M04	91.3	27.99	2015/72	172

n_2 50 Hz [rpm]	S 50 Hz	n_2 87 Hz [rpm]	S 87 Hz	M_{2N} [Nm]	Type	m [kg]	i	i_{exakt}	J_1 [10^{-4}kgm²]
P_N (50 Hz) = 4,00 kW, P_N (87 Hz) = 6,93 kW									
52	1.6	91	1.4	709	F602_0280 IE3D112M04	118.3	27.99	2015/72	174
63	1.1	109	0.94	588	F402_0230 IE3D112M04	91.3	23.21	325/14	172
63	1.9	109	1.6	589	F602_0230 IE3D112M04	118.3	23.27	1885/81	175
79	1.3	136	1.1	471	F402_0185 IE3D112M04	91.3	18.62	3575/192	173
109	0.98	190	0.82	339	F302_0135 IE3D112M04	83.0	13.38	7696/575	171
108	1.6	187	1.3	344	F402_0135 IE3D112M04	91.3	13.57	5984/441	172
108	2.1	186	2.1	345	F602_0135 IE3D112M04	118.3	13.61	871/64	175
136	1.1	235	0.95	273	F302_0110 IE3D112M04	83.0	10.79	1456/135	172
135	1.9	234	1.6	274	F402_0110 IE3D112M04	91.3	10.83	682/63	173
135	2.3	235	2.3	274	F602_0110 IE3D112M04	118.3	10.82	2077/192	178
163	1.3	282	1.1	227	F302_0090 IE3D112M04	83.0	8.986	5616/625	173
163	2.1	283	1.8	227	F402_0090 IE3D112M04	91.3	8.980	440/49	175
204	0.89	–	–	181	F202_0072 IE3D112M04	75.4	7.167	5777/806	172
204	1.5	354	1.2	182	F302_0072 IE3D112M04	83.0	7.172	208/29	174
203	2.3	352	2.0	182	F402_0072 IE3D112M04	91.3	7.202	605/84	177
256	1.7	444	1.4	145	F302_0057 IE3D112M04	83.0	5.720	143/25	176
264	1.1	457	0.89	141	F202_0056 IE3D112M04	75.4	5.552	5341/962	173
313	1.2	542	0.99	118	F202_0047 IE3D112M04	75.4	4.680	2616/559	174
315	2.0	546	1.7	118	F302_0046 IE3D112M04	83.0	4.644	4992/1075	178
324	1.2	–	–	114	F202_0090 IE3D112M02	57.4	9.006	3161/351	56
325	2.0	–	–	114	F302_0090 IE3D112M02	65.0	8.986	5616/625	58
407	1.4	–	–	91	F202_0072 IE3D112M02	57.4	7.167	5777/806	57
407	2.4	–	–	91	F302_0072 IE3D112M02	65.0	7.172	208/29	59
510	2.8	–	–	73	F302_0057 IE3D112M02	65.0	5.720	143/25	61
526	1.7	–	–	71	F202_0056 IE3D112M02	57.4	5.552	5341/962	58
624	1.9	–	–	59	F202_0047 IE3D112M02	57.4	4.680	2616/559	59
629	3.2	–	–	59	F302_0046 IE3D112M02	65.0	4.644	4992/1075	63
P_N (50 Hz) = 5,50 kW, P_N (87 Hz) = 9,53 kW									
42	0.92	73	0.88	1195	F602_0350 IE3D132S04	152.3	35.21	845/24	353
53	1.2	92	1.0	950	F602_0280 IE3D132S04	152.3	27.99	2015/72	354
64	0.83	–	–	788	F402_0230 IE3D132S04	125.3	23.21	325/14	352
64	1.4	110	1.2	790	F602_0230 IE3D132S04	152.3	23.27	1885/81	355
79	0.97	138	0.81	632	F402_0185 IE3D132S04	125.3	18.62	3575/192	353
80	1.6	138	1.4	629	F602_0185 IE3D132S04	152.3	18.52	3445/186	358
109	1.2	189	1.0	461	F402_0135 IE3D132S04	125.3	13.57	5984/441	352
109	2.0	188	1.7	462	F602_0135 IE3D132S04	152.3	13.61	871/64	355
137	1.4	237	1.2	368	F402_0110 IE3D132S04	125.3	10.83	682/63	353
137	2.3	237	1.9	367	F602_0110 IE3D132S04	152.3	10.82	2077/192	358
165	1.6	285	1.3	305	F402_0090 IE3D132S04	125.3	8.980	440/49	355
165	2.6	285	2.2	305	F602_0090 IE3D132S04	152.3	8.995	1943/216	361
205	1.8	356	1.5	245	F402_0072 IE3D132S04	125.3	7.202	605/84	357
207	3.1	358	2.6	243	F602_0072 IE3D132S04	152.3	7.159	3551/496	366
255	2.1	441	1.8	197	F402_0058 IE3D132S04	125.3	5.813	3784/651	360
261	3.6	–	–	193	F602_0057 IE3D132S04	152.3	5.673	1407/248	374
316	2.4	548	2.0	159	F402_0047 IE3D132S04	125.3	4.678	1408/301	365
326	4.1	–	–	154	F602_0045 IE3D132S04	152.3	4.546	1273/280	386
P_N (50 Hz) = 7,50 kW, P_N (87 Hz) = 12,99 kW									
53	0.83	–	–	1330	F602_0280 IE3D132M04	162.3	27.99	2015/72	434
63	0.99	110	0.83	1106	F602_0230 IE3D132M04	162.3	23.27	1885/81	435
80	1.2	138	0.97	880	F602_0185 IE3D132M04	162.3	18.52	3445/186	438
109	0.85	–	–	645	F402_0135 IE3D132M04	135.3	13.57	5984/441	432
108	1.4	188	1.2	647	F602_0135 IE3D132M04	162.3	13.61	871/64	435
136	0.99	236	0.83	515	F402_0110 IE3D132M04	135.3	10.83	682/63	433
136	1.7	236	1.4	514	F602_0110 IE3D132M04	162.3	10.82	2077/192	438
164	1.1	284	0.94	427	F402_0090 IE3D132M04	135.3	8.980	440/49	435
164	1.9	284	1.6	428	F602_0090 IE3D132M04	162.3	8.995	1943/216	441
205	1.3	355	1.1	342	F402_0072 IE3D132M04	135.3	7.202	605/84	437
206	2.2	357	1.8	340	F602_0072 IE3D132M04	162.3	7.159	3551/496	446
254	1.5	439	1.3	276	F402_0058 IE3D132M04	135.3	5.813	3784/651	440
260	2.5	–	–	270	F602_0057 IE3D132M04	162.3	5.673	1407/248	454
315	1.7	546	1.5	222	F402_0047 IE3D132M04	135.3	4.678	1408/301	445
324	3.0	–	–	216	F602_0045 IE3D132M04	162.3	4.546	1273/280	466

3.3 Dimensional drawings

In this chapter you can find the dimensions of the geared motors.

There is a dimensional drawing for every possible shaft/housing design, each with the tables for gear unit dimensions, motor dimensions and geared motor dimensions.

Dimensions can exceed the specifications of ISO 2768-mK due to casting tolerances or accumulation of individual tolerances.

We reserve the right to make dimensional changes due to ongoing technical development.

You can download 3D models of our standard drives at http://configurator.stoeber.de.

Tolerances

Axis height in accordance with DIN 747	Tolerance
Up to 50 mm	-0.4 mm
Up to 250 mm	-0.5 mm
Up to 630 mm	-0.6 mm

Solid shaft	Tolerance
Shaft ∅ fit ≤ 50 mm	DIN 748-1, ISO k6
Shaft ∅ fit > 50 mm	DIN 748-1, ISO m6
Feather keys	DIN 6885-1, high form A

Hollow shaft	Tolerance
Hollow shaft hole fit	ISO H7
Feather keys	DIN 6885-1, high form

Flange	Pilot tolerance
Up to 300 mm	ISO j6
Starting at 350 mm	ISO h6

Centering holes in solid shafts in accordance with DIN 332-2, DR shape

Thread size	M4	M5	M6	M8	M10	M12	M16	M20	M24
Thread depth [mm]	10	12.5	16	19	22	28	36	42	50

3.3.1 A shaft design (hollow shaft), G housing design (pitch circle diameter)

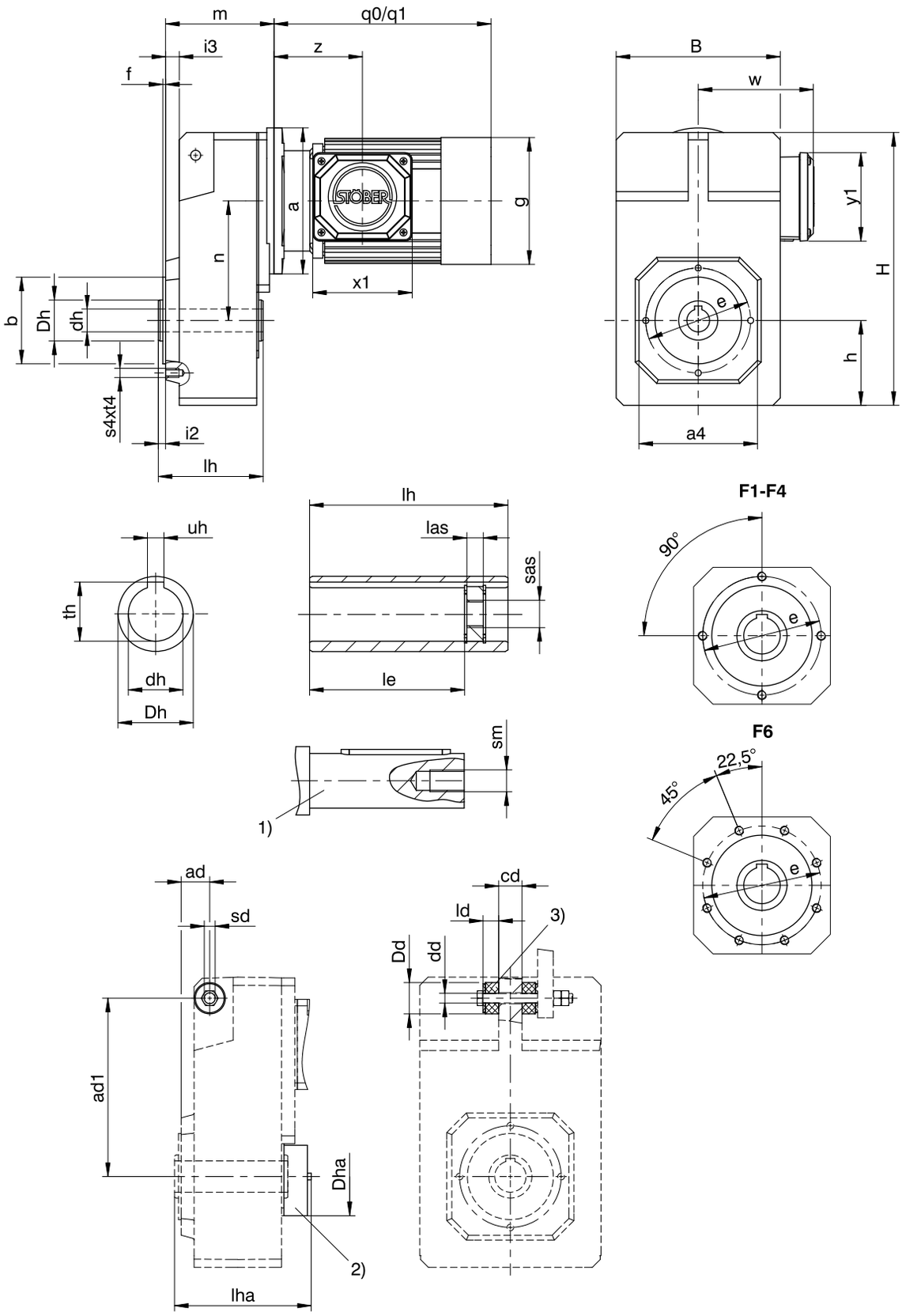

q0	Applies to motors without brake.	q1	Applies to motors with brake.
1)	The length of the machine shaft must be at least 2.2 x ∅dh and the length of the feather key must be at least 2 x ∅dh.	2)	Cover (optional)
3)	Rubber buffer for torque arm bracket (optional). Dimension ∅Dd = outer∅ of the rubber buffer when not tensioned.		

Dimensions of gear units

Type	□a4	ad	ad1	Øb	B	cd	Ødd	Ødh	ØDd	ØDh	ØDha	Øe	f	h	H	i2	i3	ld	le	lh	las	lha	s4	sd	sm	sas	t4	th	uh
F1	100	29.5	150	70_{j6}	145	20	$11^{+0,5}$	20^{H7}	30	35	70	85	2.5	74	238.0	6.5	12.5	15	73	95	12	112	M8	M10	M6	M8	13	22.8	6^{JS9}
F2	130	33.0	181	95_{j6}	180	22	$11^{+0,5}$	25^{H7}	30	45	82	115	3.0	93	299.0	8.0	15.0	15	92	115	12	130.5	M8	M10	M10	M12	13	28.3	8^{JS9}
F3	150	38.5	205	110_{j6}	206	30	$14^{+0,5}$	30^{H7}	37	50	88	130	3.5	106	335.5	8.5	16.5	20	103	130	12	155.5	M10	M12	M10	M12	16	33.3	8^{JS9}
F4	150	38.5	228	110_{j6}	230	30	$14^{+0,5}$	40^{H7}	37	55	100	130	3.5	116	370.0	8.5	16.5	20	114	145	12	174.5	M10	M12	M16	M20	16	43.3	12^{JS9}
F6	180	44.5	270	130_{j6}	265	35	$22^{+0,5}$	50^{H7}	60	70	115	165	3.5	137	433.0	10.5	20.5	30	143	180	12	192.5	M10	M20	M16	M20	16	53.8	14^{JS9}

Dimensions of motors

Type	g	q0	q1	w	x1	y1	z
D063K04	109	179	231	115	109.0	97.0	81.0
D063M04	109	179	231	115	109.0	97.0	81.0
D071K04	124	208	260	120	109.0	97.0	94.0
D071K02	124	208	260	120	109.0	97.0	94.0
D071L04	124	208	260	120	109.0	97.0	94.0
D071L02	124	208	260	120	109.0	97.0	94.0
D080K04	139	238	295	128	109.0	97.0	97.0

Type	g	q0	q1	w	x1	y1	z
IE3D080K02	139	238	295	128	109.0	97.0	97.0
IE3D080L04	157	283	351	137	109.0	97.0	107.0
IE3D080LX02	157	283	351	137	109.0	97.0	107.0
IE3D090S04	177	310	380	146	120.0	109.0	114.0
IE3D090S02	157	283	351	137	120.0	109.0	107.0
IE3D090LX04	177	365	435	146	120.0	109.0	114.0
IE3D090L02	177	310	380	146	120.0	109.0	114.0
IE3D100KX04	196	404	491	155	120.0	109.0	120.0
IE3D100L02	196	340	427	155	120.0	109.0	120.0
IE3D100LX04	196	444	531	155	120.0	109.0	120.0
IE3D112M02	196	374	461	155	120.0	109.0	120.0
IE3D112M04	217	424	521	178	146.5	156.5	134.0
IE3D132S04	258	476	591	199	146.5	156.5	141.5
IE3D132M04	258	526	641	199	146.5	156.5	141.5

Dimensions of geared motors

Type	D063			D071			D080		
	a	m	n	a	m	n	a	m	n
F102	∅140	97.5	102.0	∅140	97.5	102.0	∅160	101.5	102.0
F202	∅140	115.0	131.0	∅140	115.0	131.0	∅160	119.0	131.0
F203	∅140	152.0	131.0	–	–	–	–	–	–
F302	–	–	–	∅140	129.5	149.5	∅160	133.5	149.5
F303	∅140	166.5	149.5	∅140	166.5	149.5	–	–	–
F402	–	–	–	–	–	–	∅160	148.5	169.0
F403	–	–	–	∅140	181.5	169.0	∅160	191.5	132.0
F603	–	–	–	–	–	–	∅160	222.5	196.0

Type	IE3D080			IE3D090			IE3D100			IE3D112			IE3D132		
	a	m	n	a	m	n	a	m	n	a	m	n	a	m	n
F102	∅160	101.5	102.0	∅160	101.5	102.0	–	–	–	–	–	–	–	–	–
F202	∅160	119.0	131.0	∅160	119.0	131.0	∅200	121.0	131.0	∅200	121.0	131.0	–	–	–
F302	∅160	133.5	149.5	∅160	133.5	149.5	∅200	135.5	149.5	∅200	135.5	149.5	–	–	–
F402	∅160	148.5	169.0	∅160	148.5	169.0	∅200	150.5	169.0	∅200	150.5	169.0	∅250	153.5	169.0
F403	∅160	191.5	132.0	–	–	–	–	–	–	–	–	–	–	–	–
F602	∅160	179.5	196.0	∅160	179.5	196.0	∅200	181.5	196.0	∅200	181.5	196.0	∅250	184.5	196.0
F603	∅160	222.5	196.0	∅160	222.5	196.0	–	–	–	–	–	–	–	–	–

3.3.2 A shaft design (hollow shaft), GN housing design (pitch circle diameter + side fastening)

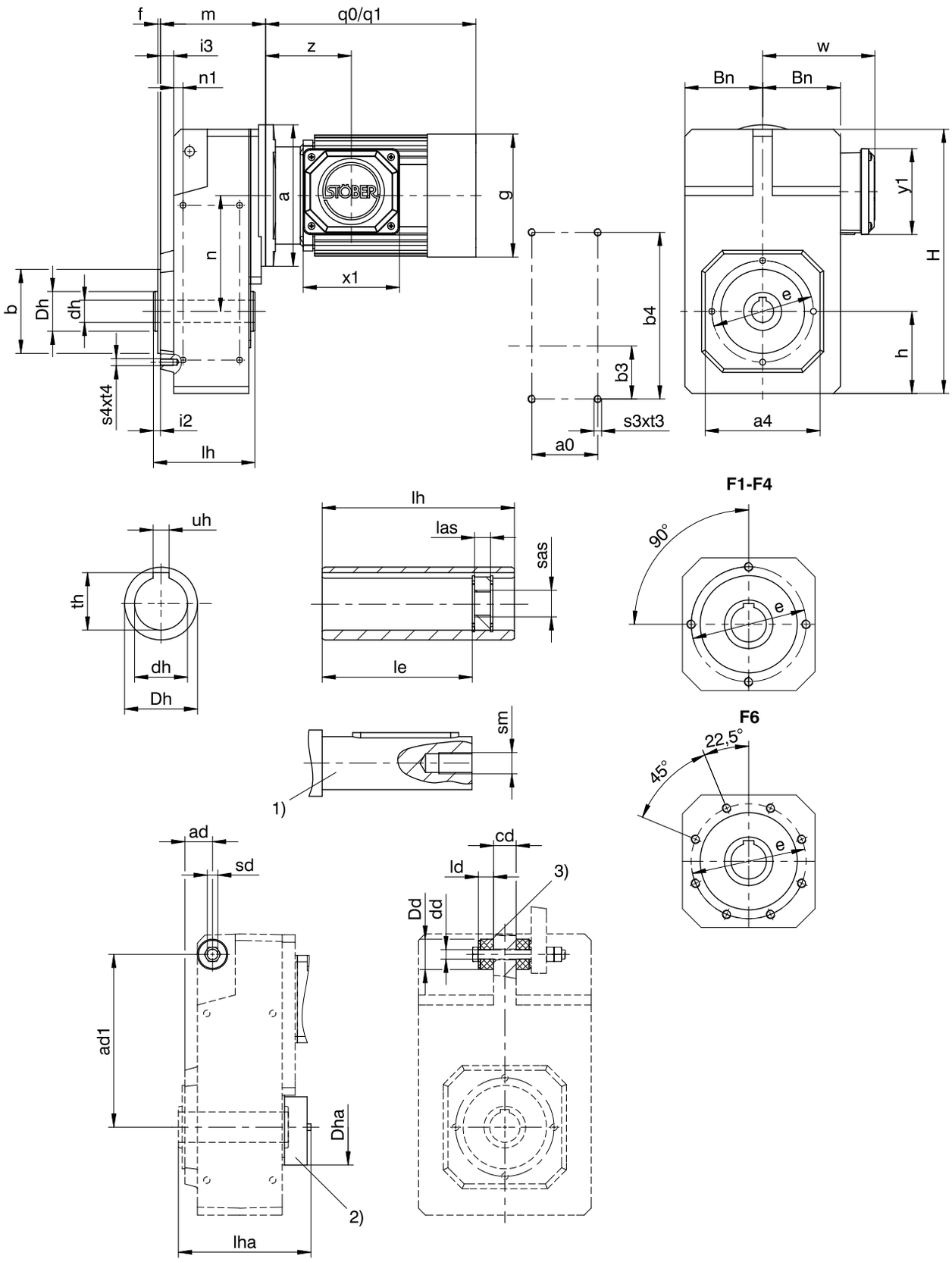

q0	Applies to motors without brake.	q1	Applies to motors with brake.
1)	The length of the machine shaft must be at least 2.2 x ∅dh and the length of the feather key must be at least 2 x ∅dh.	2)	Cover (optional)
3)	Rubber buffer for torque arm bracket (optional). Dimension ∅Dd = outer∅ of the rubber buffer when not tensioned.		

Dimensions of gear units

Type	a0	□a4	ad	ad1	Øb	b3	b4	Bn	cd	Ødd	Ødh	ØDd	ØDh	ØDha	Øe	f	h	H
F1	50	100	29.5	150	70_{j6}	40	140	71	20	$11^{+0,5}$	20^{H7}	30	35	70	85	2.5	74	238.0
F2	64	130	33.0	181	95_{j6}	55	175	88	22	$11^{+0,5}$	25^{H7}	30	45	82	115	3.0	93	299.0
F3	72	150	38.5	205	110_{j6}	60	200	102	30	$14^{+0,5}$	30^{H7}	37	50	88	130	3.5	106	335.5
F4	87	150	38.5	228	110_{j6}	70	220	114	30	$14^{+0,5}$	40^{H7}	37	55	100	130	3.5	116	370.0
F6	108	180	44.5	270	130_{j6}	85	270	131	35	$22^{+0,5}$	50^{H7}	60	70	115	165	3.5	137	433.0

Type	i2	i3	ld	le	lh	las	lha	n1	s3	s4	sd	sm	sas	t3	t4	th	uh
F1	6.5	12.5	15	73	95	12	112	10.0	M6	M8	M10	M6	M8	11	13	22.8	6^{JS9}
F2	8.0	15.0	15	92	115	12	130.5	10.5	M8	M8	M10	M10	M12	13	13	28.3	8^{JS9}
F3	8.5	16.5	20	103	130	12	155.5	12.5	M10	M10	M12	M10	M12	16	16	33.3	8^{JS9}
F4	8.5	16.5	20	114	145	12	174.5	12.5	M10	M10	M12	M16	M20	16	16	43.3	12^{JS9}
F6	10.5	20.5	30	143	180	12	192.5	15.5	M12	M10	M20	M16	M20	19	16	53.8	14^{JS9}

Dimensions of motors

Type	g	q0	q1	w	x1	y1	z
D063K04	109	179	231	115	109.0	97.0	81.0
D063M04	109	179	231	115	109.0	97.0	81.0
D071K04	124	208	260	120	109.0	97.0	94.0
D071K02	124	208	260	120	109.0	97.0	94.0
D071L04	124	208	260	120	109.0	97.0	94.0
D071L02	124	208	260	120	109.0	97.0	94.0
D080K04	139	238	295	128	109.0	97.0	97.0

Type	g	q0	q1	w	x1	y1	z
IE3D080K02	139	238	295	128	109.0	97.0	97.0
IE3D080L04	157	283	351	137	109.0	97.0	107.0
IE3D080LX02	157	283	351	137	109.0	97.0	107.0
IE3D090S04	177	310	380	146	120.0	109.0	114.0
IE3D090S02	157	283	351	137	120.0	109.0	107.0
IE3D090LX04	177	365	435	146	120.0	109.0	114.0
IE3D090L02	177	310	380	146	120.0	109.0	114.0
IE3D100KX04	196	404	491	155	120.0	109.0	120.0
IE3D100L02	196	340	427	155	120.0	109.0	120.0
IE3D100LX04	196	444	531	155	120.0	109.0	120.0
IE3D112M02	196	374	461	155	120.0	109.0	120.0
IE3D112M04	217	424	521	178	146.5	156.5	134.0
IE3D132S04	258	476	591	199	146.5	156.5	141.5
IE3D132M04	258	526	641	199	146.5	156.5	141.5

Dimensions of geared motors

Type	D063			D071			D080		
	a	m	n	a	m	n	a	m	n
F102	∅140	97.5	102.0	∅140	97.5	102.0	∅160	101.5	102.0
F202	∅140	115.0	131.0	∅140	115.0	131.0	∅160	119.0	131.0
F203	∅140	152.0	131.0	–	–	–	–	–	–
F302	–	–	–	∅140	129.5	149.5	∅160	133.5	149.5
F303	∅140	166.5	149.5	∅140	166.5	149.5	–	–	–
F402	–	–	–	–	–	–	∅160	148.5	169.0
F403	–	–	–	∅140	181.5	169.0	∅160	191.5	132.0
F603	–	–	–	–	–	–	∅160	222.5	196.0

Type	IE3D080			IE3D090			IE3D100			IE3D112			IE3D132		
	a	m	n	a	m	n	a	m	n	a	m	n	a	m	n
F102	∅160	101.5	102.0	∅160	101.5	102.0	–	–	–	–	–	–	–	–	–
F202	∅160	119.0	131.0	∅160	119.0	131.0	∅200	121.0	131.0	∅200	121.0	131.0	–	–	–
F302	∅160	133.5	149.5	∅160	133.5	149.5	∅200	135.5	149.5	∅200	135.5	149.5	–	–	–
F402	∅160	148.5	169.0	∅160	148.5	169.0	∅200	150.5	169.0	∅200	150.5	169.0	∅250	153.5	169.0
F403	∅160	191.5	132.0	–	–	–	–	–	–	–	–	–	–	–	–
F602	∅160	179.5	196.0	∅160	179.5	196.0	∅200	181.5	196.0	∅200	181.5	196.0	∅250	184.5	196.0
F603	∅160	222.5	196.0	∅160	222.5	196.0	–	–	–	–	–	–	–	–	–

3.3.3 A shaft design (hollow shaft), F housing design (round flange)

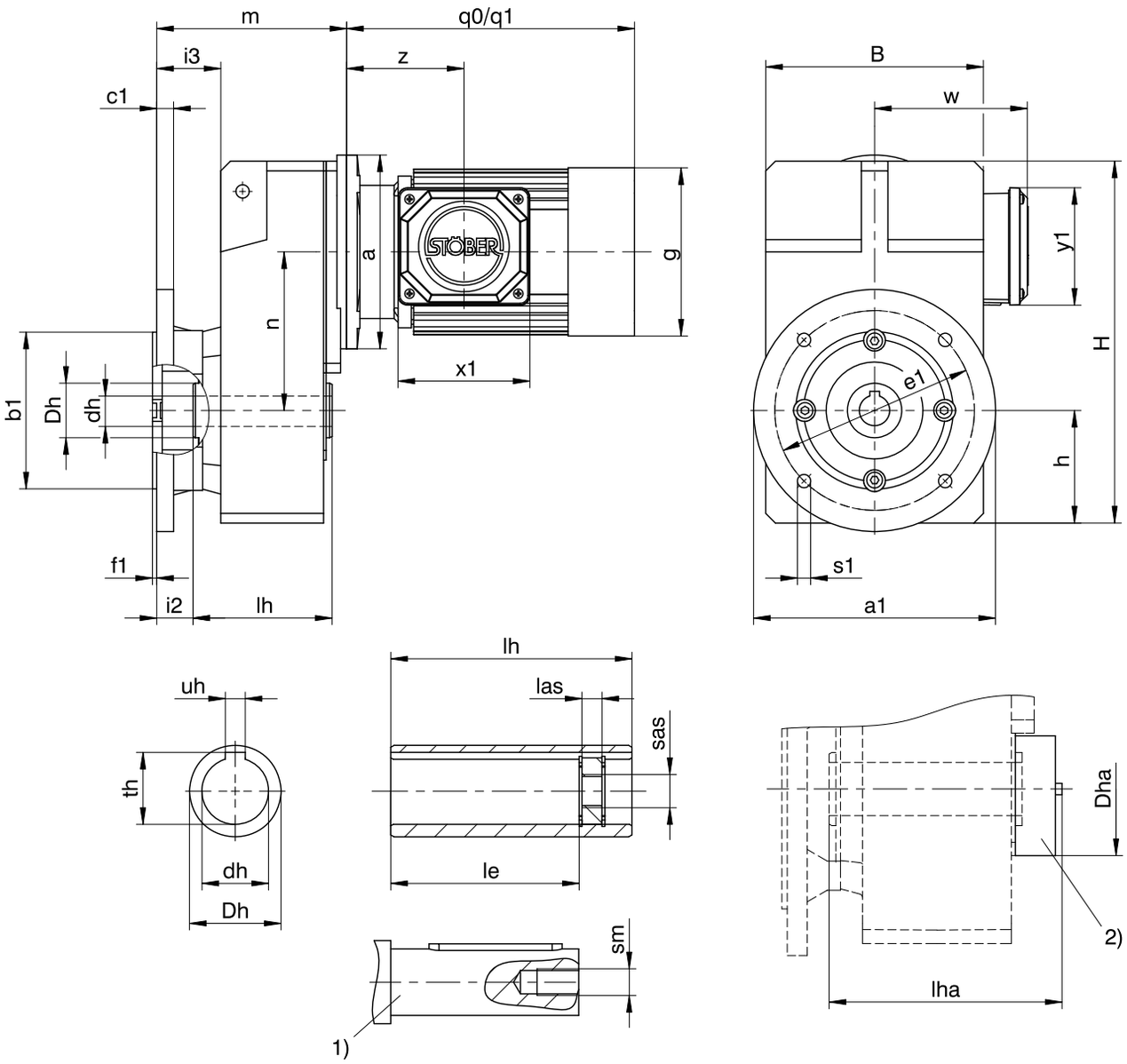

q0	Applies to motors without brake.	q1	Applies to motors with brake.
1)	The length of the machine shaft must be at least 2.2 x ∅dh and the length of the feather key must be at least 2 x ∅dh.	2)	Cover (optional)

Dimensions of gear units

Type	Øa1	Øb1	B	c1	Ødh	ØDh	ØDha	Øe1	f1	h	H	i2	i3	le	lh	las	lha	Øs1	sm	sas	th	uh
F1	160	110_{j6}	145	10	20^{H7}	35	70	130	3.5	74	238.0	25.5	44.5	73	95	12	112.0	9	M6	M8	22.8	6^{JS9}
F2	200	130_{j6}	180	14	25^{H7}	45	82	165	3.5	93	299.0	30.0	53.0	92	115	12	130.5	11	M10	M12	28.3	8^{JS9}
F3	250	180_{j6}	206	15	30^{H7}	50	88	215	4.0	106	335.5	31.5	56.5	103	130	12	155.5	14	M10	M12	33.3	8^{JS9}
F4	250	180_{j6}	230	15	40^{H7}	55	100	215	4.0	116	370.0	31.5	56.5	114	145	12	174.5	14	M16	M20	43.3	12^{JS9}
F6	300	230_{j6}	265	17	50^{H7}	70	115	265	4.0	137	433.0	29.5	60.5	143	180	12	192.5	14	M16	M20	53.8	14^{JS9}

Dimensions of motors

Type	g	q0	q1	w	x1	y1	z
D063K04	109	179	231	115	109.0	97.0	81.0
D063M04	109	179	231	115	109.0	97.0	81.0
D071K04	124	208	260	120	109.0	97.0	94.0
D071K02	124	208	260	120	109.0	97.0	94.0
D071L04	124	208	260	120	109.0	97.0	94.0
D071L02	124	208	260	120	109.0	97.0	94.0
D080K04	139	238	295	128	109.0	97.0	97.0

Type	g	q0	q1	w	x1	y1	z
IE3D080K02	139	238	295	128	109.0	97.0	97.0
IE3D080L04	157	283	351	137	109.0	97.0	107.0
IE3D080LX02	157	283	351	137	109.0	97.0	107.0
IE3D090S04	177	310	380	146	120.0	109.0	114.0
IE3D090S02	157	283	351	137	120.0	109.0	107.0
IE3D090LX04	177	365	435	146	120.0	109.0	114.0
IE3D090L02	177	310	380	146	120.0	109.0	114.0
IE3D100KX04	196	404	491	155	120.0	109.0	120.0
IE3D100L02	196	340	427	155	120.0	109.0	120.0
IE3D100LX04	196	444	531	155	120.0	109.0	120.0
IE3D112M02	196	374	461	155	120.0	109.0	120.0
IE3D112M04	217	424	521	178	146.5	156.5	134.0
IE3D132S04	258	476	591	199	146.5	156.5	141.5
IE3D132M04	258	526	641	199	146.5	156.5	141.5

Dimensions of geared motors

Type	D063			D071			D080		
	a	m	n	a	m	n	a	m	n
F102	∅140	129.5	102.0	∅140	129.5	102.0	∅160	133.5	102.0
F202	∅140	153.0	131.0	∅140	153.0	131.0	∅160	157.0	131.0
F203	∅140	190.0	131.0	–	–	–	–	–	–
F302	–	–	–	∅140	169.5	149.5	∅160	173.5	149.5
F303	∅140	206.5	149.5	∅140	206.5	149.5	–	–	–
F402	–	–	–	–	–	–	∅160	188.5	169.0
F403	–	–	–	∅140	221.5	169.0	∅160	231.5	132.0
F603	–	–	–	–	–	–	∅160	262.5	196.0

Type	IE3D080			IE3D090			IE3D100			IE3D112			IE3D132		
	a	m	n	a	m	n	a	m	n	a	m	n	a	m	n
F102	∅160	133.5	102.0	∅160	133.5	102.0	–	–	–	–	–	–	–	–	–
F202	∅160	157.0	131.0	∅160	157.0	131.0	∅200	159.0	131.0	∅200	159.0	131.0	–	–	–
F302	∅160	173.5	149.5	∅160	173.5	149.5	∅200	175.5	149.5	∅200	175.5	149.5	–	–	–
F402	∅160	188.5	169.0	∅160	188.5	169.0	∅200	190.5	169.0	∅200	190.5	169.0	∅250	193.5	169.0
F403	∅160	231.5	132.0	–	–	–	–	–	–	–	–	–	–	–	–
F602	∅160	219.5	196.0	∅160	219.5	196.0	∅200	221.5	196.0	∅200	221.5	196.0	∅250	224.5	196.0
F603	∅160	262.5	196.0	∅160	262.5	196.0	–	–	–	–	–	–	–	–	–

3.3.4 A shaft design (hollow shaft), Q housing design (square flange)

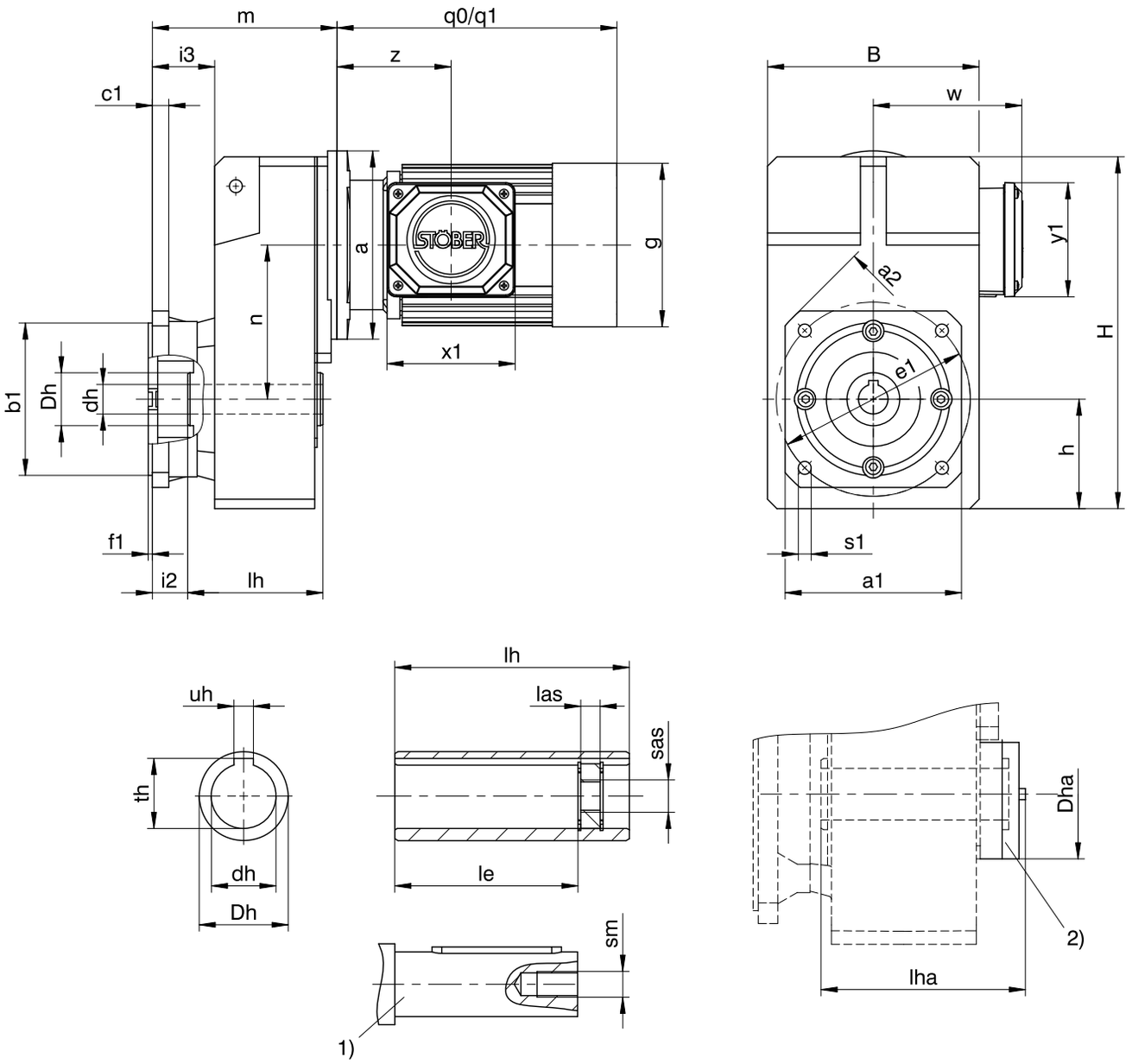

q0	Applies to motors without brake.	q1	Applies to motors with brake.
1)	The length of the machine shaft must be at least 2.2 x ∅dh and the length of the feather key must be at least 2 x ∅dh.	2)	Cover (optional)

Dimensions of gear units

Type	□a1	□a2	Øb1	B	c1	Ødh	ØDh	ØDha	Øe1	f1	h	H	i2	i3	le	lh	las	lha	Øs1	sm	sas	th	uh
F1	125	160	110_{j6}	145	10	20^{H7}	35	70	130	3.5	74	238.0	25.5	44.5	73	95	12	112.0	9	M6	M8	22.8	6^{JS9}
F2	150	195	130_{j6}	180	14	25^{H7}	45	82	165	3.5	93	299.0	30.0	53.0	92	115	12	130.5	11	M10	M12	28.3	8^{JS9}
F3	200	260	180_{j6}	206	15	30^{H7}	50	88	215	4.0	106	335.5	31.5	56.5	103	130	12	155.5	14	M10	M12	33.3	8^{JS9}
F4	200	260	180_{j6}	230	15	40^{H7}	55	100	215	4.0	116	370.0	31.5	56.5	114	145	12	174.5	14	M16	M20	43.3	12^{JS9}
F6	250	325	230_{j6}	265	17	50^{H7}	70	115	265	4.0	137	433.0	29.5	60.5	143	180	12	192.5	14	M16	M20	53.8	14^{JS9}

Dimensions of motors

Type	g	q0	q1	w	x1	y1	z
D063K04	109	179	231	115	109.0	97.0	81.0
D063M04	109	179	231	115	109.0	97.0	81.0
D071K04	124	208	260	120	109.0	97.0	94.0
D071K02	124	208	260	120	109.0	97.0	94.0
D071L04	124	208	260	120	109.0	97.0	94.0
D071L02	124	208	260	120	109.0	97.0	94.0
D080K04	139	238	295	128	109.0	97.0	97.0

Type	g	q0	q1	w	x1	y1	z
IE3D080K02	139	238	295	128	109.0	97.0	97.0
IE3D080L04	157	283	351	137	109.0	97.0	107.0
IE3D080LX02	157	283	351	137	109.0	97.0	107.0
IE3D090S04	177	310	380	146	120.0	109.0	114.0
IE3D090S02	157	283	351	137	120.0	109.0	107.0
IE3D090LX04	177	365	435	146	120.0	109.0	114.0
IE3D090L02	177	310	380	146	120.0	109.0	114.0
IE3D100KX04	196	404	491	155	120.0	109.0	120.0
IE3D100L02	196	340	427	155	120.0	109.0	120.0
IE3D100LX04	196	444	531	155	120.0	109.0	120.0
IE3D112M02	196	374	461	155	120.0	109.0	120.0
IE3D112M04	217	424	521	178	146.5	156.5	134.0
IE3D132S04	258	476	591	199	146.5	156.5	141.5
IE3D132M04	258	526	641	199	146.5	156.5	141.5

Dimensions of geared motors

Type	D063			D071			D080		
	a	m	n	a	m	n	a	m	n
F102	∅140	129.5	102.0	∅140	129.5	102.0	∅160	133.5	102.0
F202	∅140	153.0	131.0	∅140	153.0	131.0	∅160	157.0	131.0
F203	∅140	190.0	131.0	–	–	–	–	–	–
F302	–	–	–	∅140	169.5	149.5	∅160	173.5	149.5
F303	∅140	206.5	149.5	∅140	206.5	149.5	–	–	–
F402	–	–	–	–	–	–	∅160	188.5	169.0
F403	–	–	–	∅140	221.5	169.0	∅160	231.5	132.0
F603	–	–	–	–	–	–	∅160	262.5	196.0

Type	IE3D080			IE3D090			IE3D100			IE3D112			IE3D132		
	a	m	n	a	m	n	a	m	n	a	m	n	a	m	n
F102	∅160	133.5	102.0	∅160	133.5	102.0	–	–	–	–	–	–	–	–	–
F202	∅160	157.0	131.0	∅160	157.0	131.0	∅200	159.0	131.0	∅200	159.0	131.0	–	–	–
F302	∅160	173.5	149.5	∅160	173.5	149.5	∅200	175.5	149.5	∅200	175.5	149.5	–	–	–
F402	∅160	188.5	169.0	∅160	188.5	169.0	∅200	190.5	169.0	∅200	190.5	169.0	∅250	193.5	169.0
F403	∅160	231.5	132.0	–	–	–	–	–	–	–	–	–	–	–	–
F602	∅160	219.5	196.0	∅160	219.5	196.0	∅200	221.5	196.0	∅200	221.5	196.0	∅250	224.5	196.0
F603	∅160	262.5	196.0	∅160	262.5	196.0	–	–	–	–	–	–	–	–	–

3.3.5 V shaft design (solid shaft), F housing design (round flange)

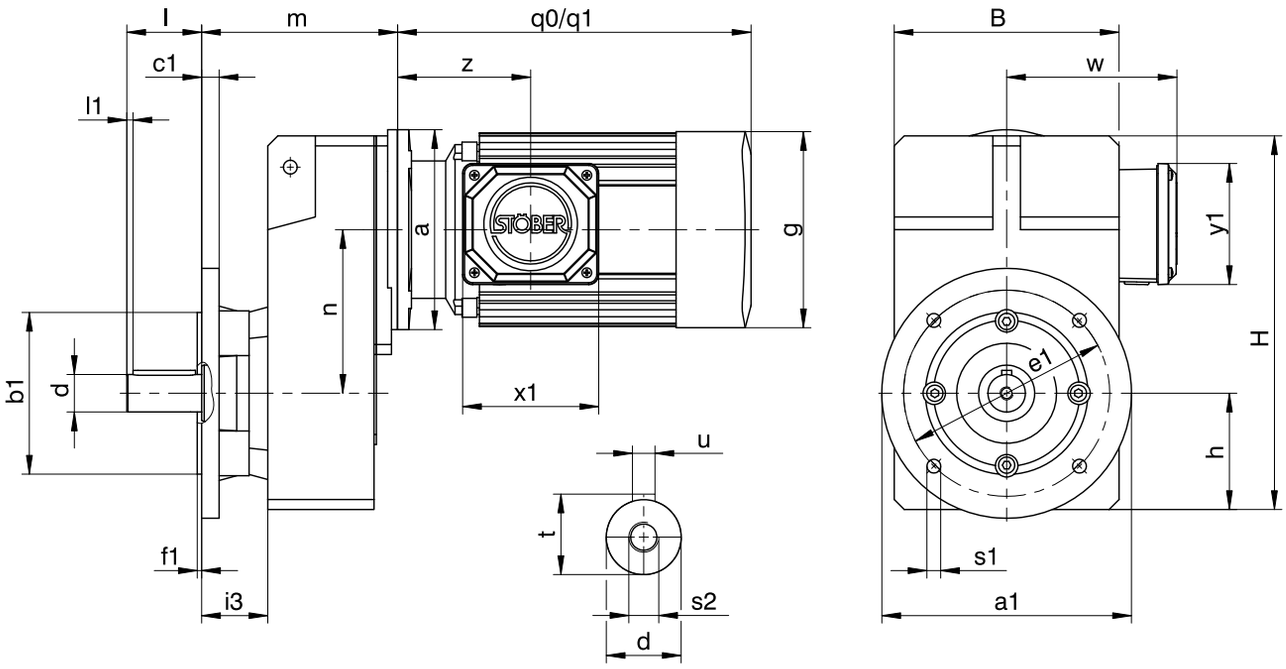

q0 Applies to motors without brake. q1 Applies to motors with brake.

Dimensions of gear units

Type	Øa1	Øb1	B	c1	Ød	Øe1	f1	h	H	i3	l	l1	Øs1	s2	t	u
F1	160	110_{j6}	145	10	25_{k6}	130	3.5	74	238.0	44.5	50	5	9	M10	28.0	A8×7×40
F2	200	130_{j6}	180	14	30_{k6}	165	3.5	93	299.0	53.0	60	5	11	M10	33.0	A8×7×50
F3	250	180_{j6}	206	15	35_{k6}	215	4.0	106	335.5	56.5	70	5	14	M12	38.0	A10×8×60
F4	250	180_{j6}	230	15	40_{k6}	215	4.0	116	370.0	56.5	80	5	14	M16	43.0	A12×8×70
F6	300	230_{j6}	265	17	50_{k6}	265	4.0	137	433.0	60.5	100	5	14	M16	53.5	A14×9×90

Dimensions of motors

Type	g	q0	q1	w	x1	y1	z
D063K04	109	179	231	115	109.0	97.0	81.0
D063M04	109	179	231	115	109.0	97.0	81.0
D071K04	124	208	260	120	109.0	97.0	94.0
D071K02	124	208	260	120	109.0	97.0	94.0
D071L04	124	208	260	120	109.0	97.0	94.0
D071L02	124	208	260	120	109.0	97.0	94.0
D080K04	139	238	295	128	109.0	97.0	97.0

Type	g	q0	q1	w	x1	y1	z
IE3D080K02	139	238	295	128	109.0	97.0	97.0
IE3D080L04	157	283	351	137	109.0	97.0	107.0
IE3D080LX02	157	283	351	137	109.0	97.0	107.0
IE3D090S04	177	310	380	146	120.0	109.0	114.0
IE3D090S02	157	283	351	137	120.0	109.0	107.0
IE3D090LX04	177	365	435	146	120.0	109.0	114.0
IE3D090L02	177	310	380	146	120.0	109.0	114.0
IE3D100KX04	196	404	491	155	120.0	109.0	120.0
IE3D100L02	196	340	427	155	120.0	109.0	120.0
IE3D100LX04	196	444	531	155	120.0	109.0	120.0
IE3D112M02	196	374	461	155	120.0	109.0	120.0
IE3D112M04	217	424	521	178	146.5	156.5	134.0
IE3D132S04	258	476	591	199	146.5	156.5	141.5
IE3D132M04	258	526	641	199	146.5	156.5	141.5

Dimensions of geared motors

Type	D063			D071			D080		
	a	m	n	a	m	n	a	m	n
F102	∅140	129.5	102.0	∅140	129.5	102.0	∅160	133.5	102.0
F202	∅140	153.0	131.0	∅140	153.0	131.0	∅160	157.0	131.0
F203	∅140	190.0	131.0	–	–	–	–	–	–
F302	–	–	–	∅140	169.5	149.5	∅160	173.5	149.5
F303	∅140	206.5	149.5	∅140	206.5	149.5	–	–	–
F402	–	–	–	–	–	–	∅160	188.5	169.0
F403	–	–	–	∅140	221.5	169.0	∅160	231.5	132.0
F603	–	–	–	–	–	–	∅160	262.5	196.0

Type	IE3D080			IE3D090			IE3D100			IE3D112			IE3D132		
	a	m	n	a	m	n	a	m	n	a	m	n	a	m	n
F102	∅160	133.5	102.0	∅160	133.5	102.0	–	–	–	–	–	–	–	–	–
F202	∅160	157.0	131.0	∅160	157.0	131.0	∅200	159.0	131.0	∅200	159.0	131.0	–	–	–
F302	∅160	173.5	149.5	∅160	173.5	149.5	∅200	175.5	149.5	∅200	175.5	149.5	–	–	–
F402	∅160	188.5	169.0	∅160	188.5	169.0	∅200	190.5	169.0	∅200	190.5	169.0	∅250	193.5	169.0
F403	∅160	231.5	132.0	–	–	–	–	–	–	–	–	–	–	–	–
F602	∅160	219.5	196.0	∅160	219.5	196.0	∅200	221.5	196.0	∅200	221.5	196.0	∅250	224.5	196.0
F603	∅160	262.5	196.0	∅160	262.5	196.0	–	–	–	–	–	–	–	–	–

3.3.6 V shaft design (solid shaft), Q housing design (square flange)

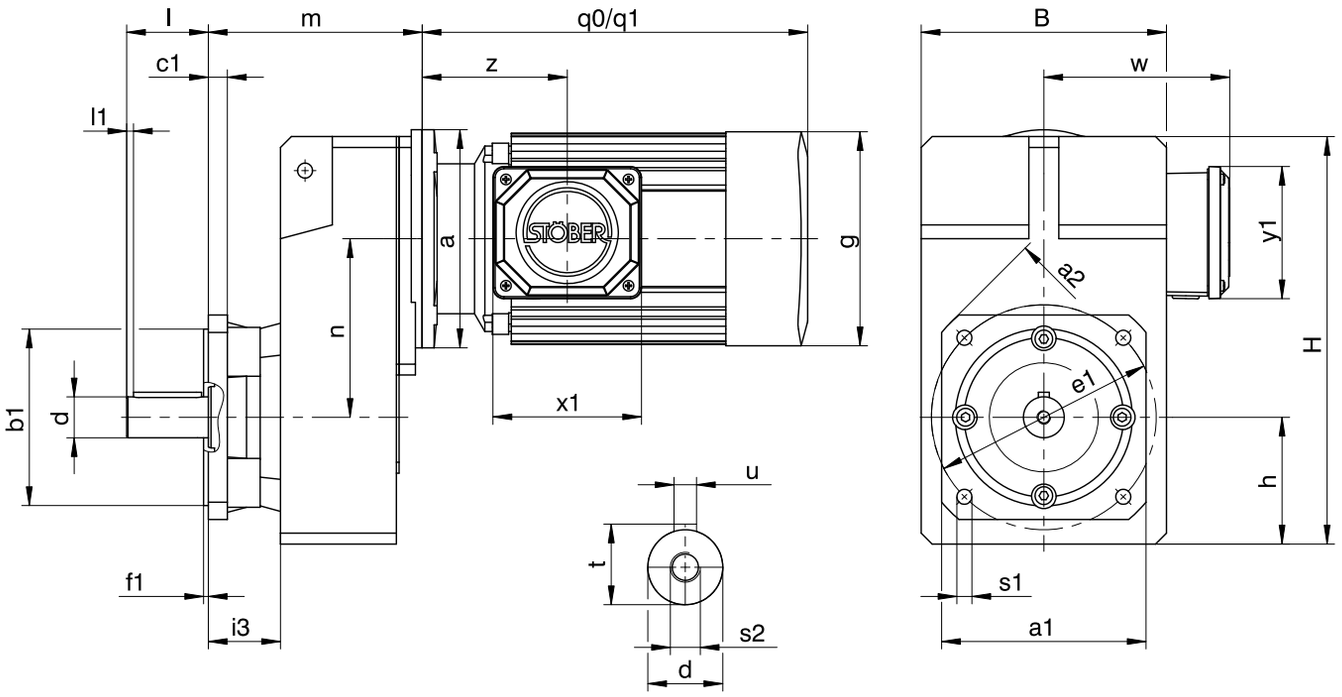

q0 Applies to motors without brake.

q1 Applies to motors with brake.

Dimensions of gear units

Type	□a1	□a2	Øb1	c1	B	Ød	Øe1	f1	h	H	i3	l	l1	Øs1	s2	t	u
F1	125	160	110_{j6}	10	145	25_{k6}	130	3.5	74	238.0	44.5	50	5	9	M10	28.0	A8×7×40
F2	150	195	130_{j6}	14	180	30_{k6}	165	3.5	93	299.0	53.0	60	5	11	M10	33.0	A8×7×50
F3	200	260	180_{j6}	15	206	35_{k6}	215	4.0	106	335.5	56.5	70	5	14	M12	38.0	A10×8×60
F4	200	260	180_{j6}	15	230	40_{k6}	215	4.0	116	370.0	56.5	80	5	14	M16	43.0	A12×8×70
F6	250	325	230_{j6}	17	265	50_{k6}	265	4.0	137	433.0	60.5	100	5	14	M16	53.5	A14×9×90

Dimensions of motors

Type	g	q0	q1	w	x1	y1	z
D063K04	109	179	231	115	109.0	97.0	81.0
D063M04	109	179	231	115	109.0	97.0	81.0
D071K04	124	208	260	120	109.0	97.0	94.0
D071K02	124	208	260	120	109.0	97.0	94.0
D071L04	124	208	260	120	109.0	97.0	94.0
D071L02	124	208	260	120	109.0	97.0	94.0
D080K04	139	238	295	128	109.0	97.0	97.0

Type	g	q0	q1	w	x1	y1	z
IE3D080K02	139	238	295	128	109.0	97.0	97.0
IE3D080L04	157	283	351	137	109.0	97.0	107.0
IE3D080LX02	157	283	351	137	109.0	97.0	107.0
IE3D090S04	177	310	380	146	120.0	109.0	114.0
IE3D090S02	157	283	351	137	120.0	109.0	107.0
IE3D090LX04	177	365	435	146	120.0	109.0	114.0
IE3D090L02	177	310	380	146	120.0	109.0	114.0
IE3D100KX04	196	404	491	155	120.0	109.0	120.0
IE3D100L02	196	340	427	155	120.0	109.0	120.0
IE3D100LX04	196	444	531	155	120.0	109.0	120.0
IE3D112M02	196	374	461	155	120.0	109.0	120.0
IE3D112M04	217	424	521	178	146.5	156.5	134.0
IE3D132S04	258	476	591	199	146.5	156.5	141.5
IE3D132M04	258	526	641	199	146.5	156.5	141.5

Dimensions of geared motors

Type	D063			D071			D080		
	a	m	n	a	m	n	a	m	n
F102	∅140	129.5	102.0	∅140	129.5	102.0	∅160	133.5	102.0
F202	∅140	153.0	131.0	∅140	153.0	131.0	∅160	157.0	131.0
F203	∅140	190.0	131.0	–	–	–	–	–	–
F302	–	–	–	∅140	169.5	149.5	∅160	173.5	149.5
F303	∅140	206.5	149.5	∅140	206.5	149.5	–	–	–
F402	–	–	–	–	–	–	∅160	188.5	169.0
F403	–	–	–	∅140	221.5	169.0	∅160	231.5	132.0
F603	–	–	–	–	–	–	∅160	262.5	196.0

Type	IE3D080			IE3D090			IE3D100			IE3D112			IE3D132		
	a	m	n	a	m	n	a	m	n	a	m	n	a	m	n
F102	∅160	133.5	102.0	∅160	133.5	102.0	–	–	–	–	–	–	–	–	–
F202	∅160	157.0	131.0	∅160	157.0	131.0	∅200	159.0	131.0	∅200	159.0	131.0	–	–	–
F302	∅160	173.5	149.5	∅160	173.5	149.5	∅200	175.5	149.5	∅200	175.5	149.5	–	–	–
F402	∅160	188.5	169.0	∅160	188.5	169.0	∅200	190.5	169.0	∅200	190.5	169.0	∅250	193.5	169.0
F403	∅160	231.5	132.0	–	–	–	–	–	–	–	–	–	–	–	–
F602	∅160	219.5	196.0	∅160	219.5	196.0	∅200	221.5	196.0	∅200	221.5	196.0	∅250	224.5	196.0
F603	∅160	262.5	196.0	∅160	262.5	196.0	–	–	–	–	–	–	–	–	–

3.3.7 S shaft design (hollow shaft with shrink disk), G housing design (pitch circle diameter)

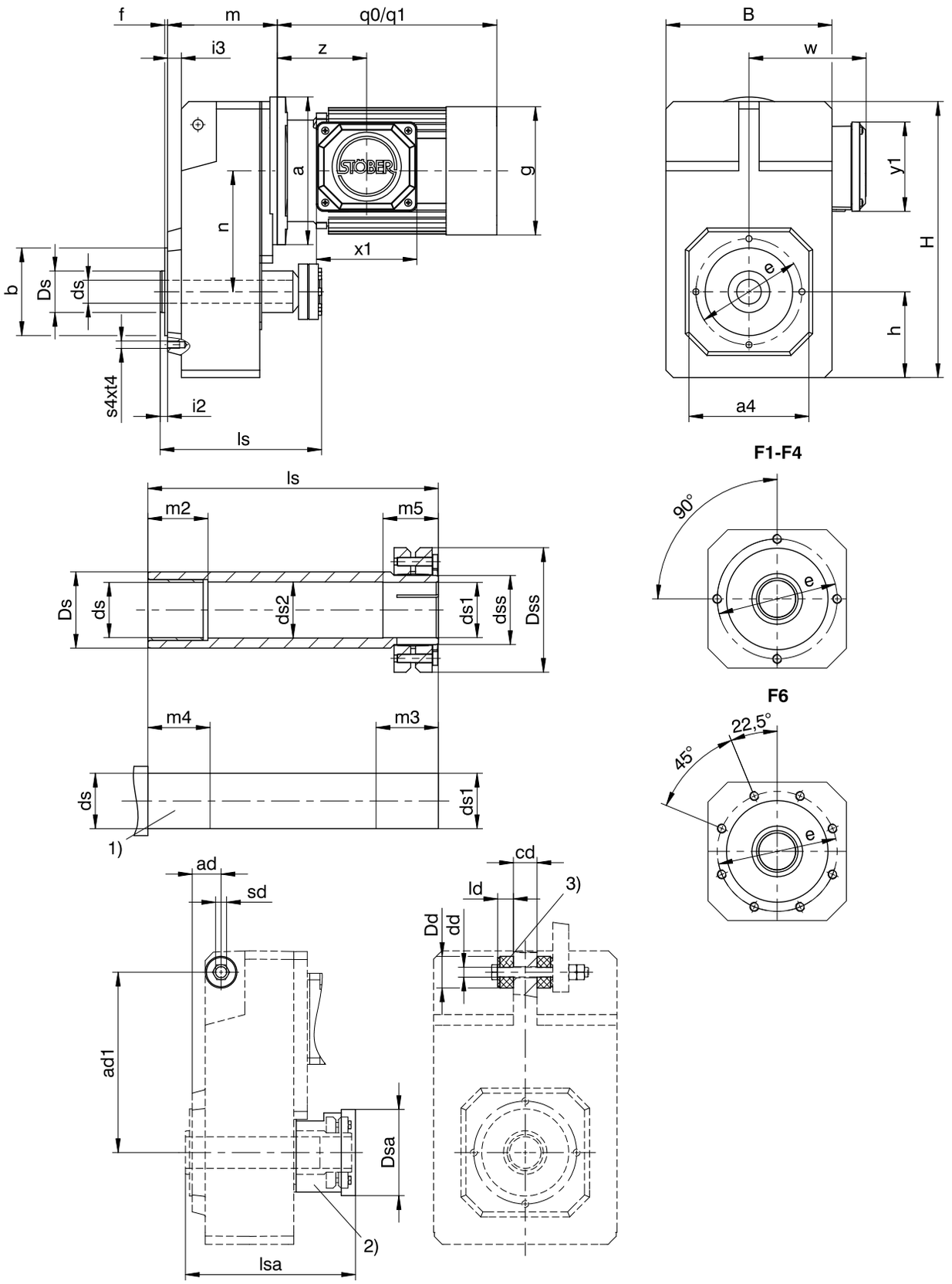

q0	Applies to motors without brake.	q1	Applies to motors with brake.
1)	Machine shaft: The dimension ls must meet or exceed the specified value.	2)	Cover (optional)
3)	Rubber buffer for torque arm bracket (optional). Dimension ∅Dd = outer∅ of the rubber buffer when not tensioned.		

Dimensions of gear units

Type	□a4	ad	ad1	Øb	B	cd	Ødd	Øds	Øds1	Øds2	Ødss	ØDd	ØDs	ØDsa	ØDss	Øe	f	h	H	i2	i3	ld	ls	lsa	m2	m3	m4	m5	s4	sd	t4
F1	100	29.5	150	70_{j6}	145	20	$11^{+0,5}$	20_{h9}	20_{h9}^{H7}	20.5	24	30	35	63	50	85	2.5	74	238.0	6.5	12.5	15	146	150	20	31	25	26	M8	M10	13
F2	130	33.0	181	95_{j6}	180	22	$11^{+0,5}$	25_{h9}	25_{h9}^{H7}	25.5	30	30	45	73	60	115	3.0	93	299.0	8.0	15.0	15	175	180	20	37	25	32	M8	M10	13
F3	150	38.5	205	110_{j6}	206	30	$14^{+0,5}$	30_{h9}	30_{h9}^{H7}	30.5	36	37	50	83	72	130	3.5	106	335.5	8.5	16.5	20	192	196	25	37	30	32	M10	M12	16
F4	150	38.5	228	110_{j6}	230	30	$14^{+0,5}$	40_{h9}	40_{h9}^{H7}	40.5	50	37	55	108	90	130	3.5	116	370.0	8.5	16.5	20	210	215	40	45	45	40	M10	M12	16
F6	180	44.5	270	130_{j6}	265	35	$22^{+0,5}$	50_{h9}	50_{h9}^{H7}	50.5	62	60	70	128	106	165	3.5	137	433.0	10.5	20.5	30	248	251	40	47	45	42	M10	M20	16

Dimensions of motors

Type	g	q0	q1	w	x1	y1	z
D063K04	109	179	231	115	109.0	97.0	81.0
D063M04	109	179	231	115	109.0	97.0	81.0
D071K04	124	208	260	120	109.0	97.0	94.0
D071K02	124	208	260	120	109.0	97.0	94.0
D071L04	124	208	260	120	109.0	97.0	94.0
D071L02	124	208	260	120	109.0	97.0	94.0
D080K04	139	238	295	128	109.0	97.0	97.0

Type	g	q0	q1	w	x1	y1	z
IE3D080K02	139	238	295	128	109.0	97.0	97.0
IE3D080L04	157	283	351	137	109.0	97.0	107.0
IE3D080LX02	157	283	351	137	109.0	97.0	107.0
IE3D090S04	177	310	380	146	120.0	109.0	114.0
IE3D090S02	157	283	351	137	120.0	109.0	107.0
IE3D090LX04	177	365	435	146	120.0	109.0	114.0
IE3D090L02	177	310	380	146	120.0	109.0	114.0
IE3D100KX04	196	404	491	155	120.0	109.0	120.0
IE3D100L02	196	340	427	155	120.0	109.0	120.0
IE3D100LX04	196	444	531	155	120.0	109.0	120.0
IE3D112M02	196	374	461	155	120.0	109.0	120.0
IE3D112M04	217	424	521	178	146.5	156.5	134.0
IE3D132S04	258	476	591	199	146.5	156.5	141.5
IE3D132M04	258	526	641	199	146.5	156.5	141.5

Dimensions of geared motors

Type	D063			D071			D080		
	a	m	n	a	m	n	a	m	n
F102	∅140	97.5	102.0	∅140	97.5	102.0	∅160	101.5	102.0
F202	∅140	115.0	131.0	∅140	115.0	131.0	∅160	119.0	131.0
F203	∅140	152.0	131.0	–	–	–	–	–	–
F302	–	–	–	∅140	129.5	149.5	∅160	133.5	149.5
F303	∅140	166.5	149.5	∅140	166.5	149.5	–	–	–
F402	–	–	–	–	–	–	∅160	148.5	169.0
F403	–	–	–	∅140	181.5	169.0	∅160	191.5	132.0
F603	–	–	–	–	–	–	∅160	222.5	196.0

Type	IE3D080			IE3D090			IE3D100			IE3D112			IE3D132		
	a	m	n	a	m	n	a	m	n	a	m	n	a	m	n
F102	∅160	101.5	102.0	∅160	101.5	102.0	–	–	–	–	–	–	–	–	–
F202	∅160	119.0	131.0	∅160	119.0	131.0	∅200	121.0	131.0	∅200	121.0	131.0	–	–	–
F302	∅160	133.5	149.5	∅160	133.5	149.5	∅200	135.5	149.5	∅200	135.5	149.5	–	–	–
F402	∅160	148.5	169.0	∅160	148.5	169.0	∅200	150.5	169.0	∅200	150.5	169.0	∅250	153.5	169.0
F403	∅160	191.5	132.0	–	–	–	–	–	–	–	–	–	–	–	–
F602	∅160	179.5	196.0	∅160	179.5	196.0	∅200	181.5	196.0	∅200	181.5	196.0	∅250	184.5	196.0
F603	∅160	222.5	196.0	∅160	222.5	196.0	–	–	–	–	–	–	–	–	–

3.3.8 S shaft design (hollow shaft with shrink disk), GN housing design (pitch circle diameter + side fastening)

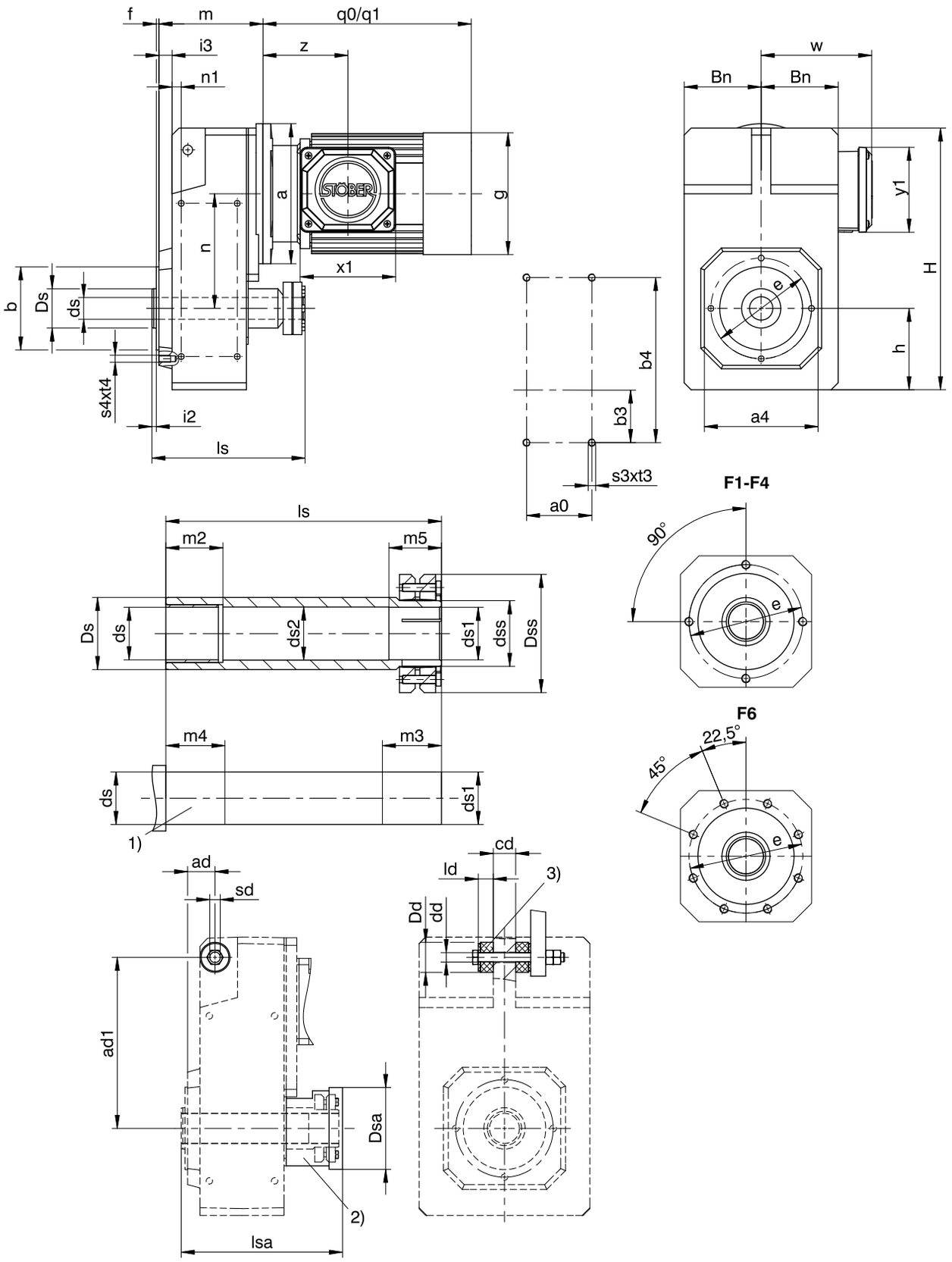

q0	Applies to motors without brake.	q1	Applies to motors with brake.
1)	Machine shaft: The dimension ls must meet or exceed the specified value.	2)	Cover (optional)
3)	Rubber buffer for torque arm bracket (optional). Dimension ∅Dd = outer∅ of the rubber buffer when not tensioned.		

Dimensions of gear units

Type	a0	□a4	ad	ad1	Øb	b3	b4	Bn	cd	Ødd	Ød$_s$	Ød$_{s1}$	Ød$_{s2}$	Ød$_{ss}$	ØDd	ØD$_s$	ØD$_{sa}$	ØD$_{ss}$
F1	50	100	29.5	150	70_{j6}	40	140	71	20	$11^{+0,5}$	20_{h9}	20_{h9}^{H7}	20.5	24	30	63	63	50
F2	64	130	33.0	181	95_{j6}	55	175	88	22	$11^{+0,5}$	25_{h9}	25_{h9}^{H7}	25.5	30	30	73	73	60
F3	72	150	38.5	205	110_{j6}	60	200	102	30	$14^{+0,5}$	30_{h9}	30_{h9}^{H7}	30.5	36	37	83	83	72
F4	87	150	38.5	228	110_{j6}	70	220	114	30	$14^{+0,5}$	40_{h9}	40_{h9}^{H7}	40.5	50	37	108	108	90
F6	108	180	44.5	270	130_{j6}	85	270	131	35	$22^{+0,5}$	50_{h9}	50_{h9}^{H7}	50.5	62	60	128	128	106

Type	Øe	f	h	H	i2	i3	ld	ls	lsa	n1	m2	m3	m4	m5	s3	s4	sd	t3	t4
F1	85	2.5	74	238.0	6.5	12.5	15	146	150	10	20	31	25	26	M6	M8	M10	11	13
F2	115	3.0	93	299.0	8.0	15.0	15	175	180	10.5	20	37	25	32	M8	M8	M10	13	13
F3	130	3.5	106	335.5	8.5	16.5	20	192	196	12.5	25	37	30	32	M10	M10	M12	16	16
F4	130	3.5	116	370.0	8.5	16.5	20	210	215	12.5	40	45	45	40	M10	M10	M12	16	16
F6	165	3.5	137	433.0	10.5	20.5	30	248	251	15.5	40	47	45	42	M12	M10	M20	19	16

Dimensions of motors

Type	g	q0	q1	w	x1	y1	z
D063K04	109	179	231	115	109.0	97.0	81.0
D063M04	109	179	231	115	109.0	97.0	81.0
D071K04	124	208	260	120	109.0	97.0	94.0
D071K02	124	208	260	120	109.0	97.0	94.0
D071L04	124	208	260	120	109.0	97.0	94.0
D071L02	124	208	260	120	109.0	97.0	94.0
D080K04	139	238	295	128	109.0	97.0	97.0

Type	g	q0	q1	w	x1	y1	z
IE3D080K02	139	238	295	128	109.0	97.0	97.0
IE3D080L04	157	283	351	137	109.0	97.0	107.0
IE3D080LX02	157	283	351	137	109.0	97.0	107.0
IE3D090S04	177	310	380	146	120.0	109.0	114.0
IE3D090S02	157	283	351	137	120.0	109.0	107.0
IE3D090LX04	177	365	435	146	120.0	109.0	114.0
IE3D090L02	177	310	380	146	120.0	109.0	114.0
IE3D100KX04	196	404	491	155	120.0	109.0	120.0
IE3D100L02	196	340	427	155	120.0	109.0	120.0
IE3D100LX04	196	444	531	155	120.0	109.0	120.0
IE3D112M02	196	374	461	155	120.0	109.0	120.0
IE3D112M04	217	424	521	178	146.5	156.5	134.0
IE3D132S04	258	476	591	199	146.5	156.5	141.5
IE3D132M04	258	526	641	199	146.5	156.5	141.5

Dimensions of geared motors

Type	D063			D071			D080		
	a	m	n	a	m	n	a	m	n
F102	∅140	97.5	102.0	∅140	97.5	102.0	∅160	101.5	102.0
F202	∅140	115.0	131.0	∅140	115.0	131.0	∅160	119.0	131.0
F203	∅140	152.0	131.0	–	–	–	–	–	–
F302	–	–	–	∅140	129.5	149.5	∅160	133.5	149.5
F303	∅140	166.5	149.5	∅140	166.5	149.5	–	–	–
F402	–	–	–	–	–	–	∅160	148.5	169.0
F403	–	–	–	∅140	181.5	169.0	∅160	191.5	132.0
F603	–	–	–	–	–	–	∅160	222.5	196.0

Type	IE3D080			IE3D090			IE3D100			IE3D112			IE3D132		
	a	m	n	a	m	n	a	m	n	a	m	n	a	m	n
F102	∅160	101.5	102.0	∅160	101.5	102.0	–	–	–	–	–	–	–	–	–
F202	∅160	119.0	131.0	∅160	119.0	131.0	∅200	121.0	131.0	∅200	121.0	131.0	–	–	–
F302	∅160	133.5	149.5	∅160	133.5	149.5	∅200	135.5	149.5	∅200	135.5	149.5	–	–	–
F402	∅160	148.5	169.0	∅160	148.5	169.0	∅200	150.5	169.0	∅200	150.5	169.0	∅250	153.5	169.0
F403	∅160	191.5	132.0	–	–	–	–	–	–	–	–	–	–	–	–
F602	∅160	179.5	196.0	∅160	179.5	196.0	∅200	181.5	196.0	∅200	181.5	196.0	∅250	184.5	196.0
F603	∅160	222.5	196.0	∅160	222.5	196.0	–	–	–	–	–	–	–	–	–

3.3.9 S shaft design (hollow shaft with shrink disk), F housing design (round flange)

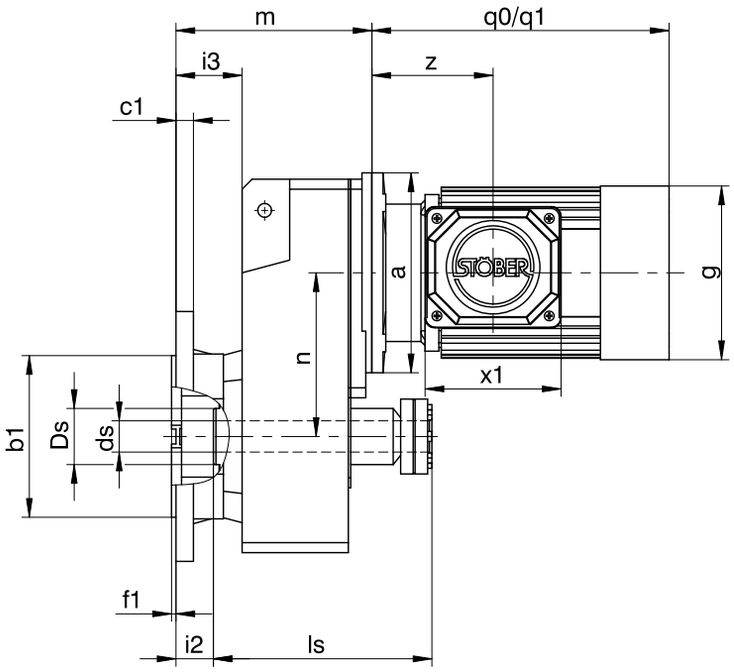

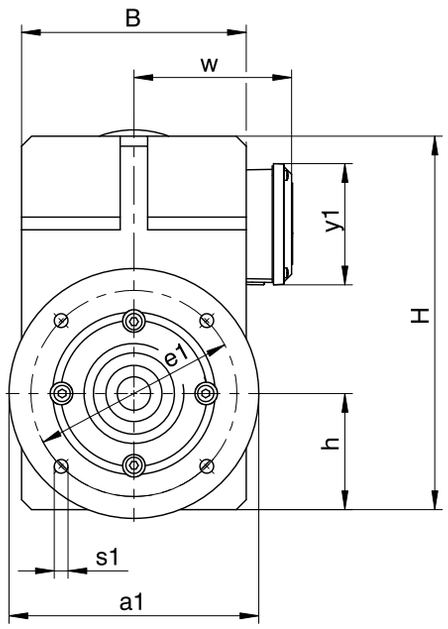

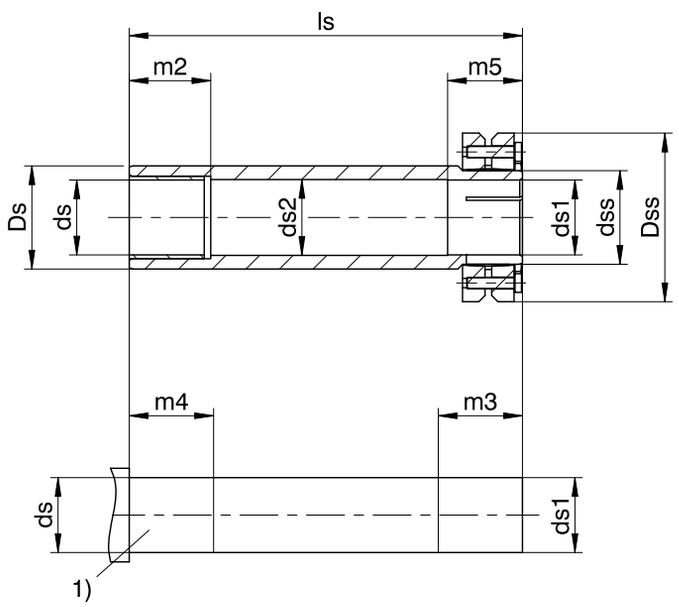

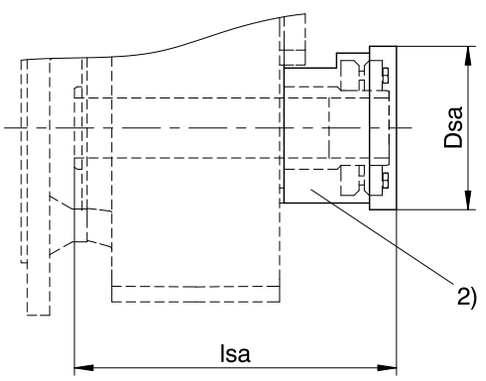

q0	Applies to motors without brake.	q1	Applies to motors with brake.
1)	Machine shaft: The dimension ls must meet or exceed the specified value.	2)	Cover (optional)

Dimensions of gear units

Type	Øa1	Øb1	B	c1	Øds	Øds1	Øds2	Ødss	ØDs	ØDsa	ØDss	Øe1	f1	h	H	i2	i3	ls	lsa	m2	m3	m4	m5	Øs1
F1	160	110_{j6}	145	10	20_{h9}	20_{h9}^{H7}	20.5	24	35	63	50	130	3.5	74	238.0	25.5	44.5	146	150	20	31	25	26	9
F2	200	130_{j6}	180	14	25_{h9}	25_{h9}^{H7}	25.5	30	45	73	60	165	3.5	93	299.0	30.0	53.0	175	180	20	37	25	32	11
F3	250	180_{j6}	206	15	30_{h9}	30_{h9}^{H7}	30.5	36	50	83	72	215	4.0	106	335.5	31.5	56.5	192	196	25	37	30	32	14
F4	250	180_{j6}	230	15	40_{h9}	40_{h9}^{H7}	40.5	50	55	108	90	215	4.0	116	370.0	31.5	56.5	210	215	40	45	45	40	14
F6	300	230_{j6}	265	17	50_{h9}	50_{h9}^{H7}	50.5	62	70	128	106	265	4.0	137	433.0	29.5	60.5	248	251	40	47	45	42	14

Dimensions of motors

Type	g	q0	q1	w	x1	y1	z
D063K04	109	179	231	115	109.0	97.0	81.0
D063M04	109	179	231	115	109.0	97.0	81.0
D071K04	124	208	260	120	109.0	97.0	94.0
D071K02	124	208	260	120	109.0	97.0	94.0
D071L04	124	208	260	120	109.0	97.0	94.0
D071L02	124	208	260	120	109.0	97.0	94.0
D080K04	139	238	295	128	109.0	97.0	97.0

Type	g	q0	q1	w	x1	y1	z
IE3D080K02	139	238	295	128	109.0	97.0	97.0
IE3D080L04	157	283	351	137	109.0	97.0	107.0
IE3D080LX02	157	283	351	137	109.0	97.0	107.0
IE3D090S04	177	310	380	146	120.0	109.0	114.0
IE3D090S02	157	283	351	137	120.0	109.0	107.0
IE3D090LX04	177	365	435	146	120.0	109.0	114.0
IE3D090L02	177	310	380	146	120.0	109.0	114.0
IE3D100KX04	196	404	491	155	120.0	109.0	120.0
IE3D100L02	196	340	427	155	120.0	109.0	120.0
IE3D100LX04	196	444	531	155	120.0	109.0	120.0
IE3D112M02	196	374	461	155	120.0	109.0	120.0
IE3D112M04	217	424	521	178	146.5	156.5	134.0
IE3D132S04	258	476	591	199	146.5	156.5	141.5
IE3D132M04	258	526	641	199	146.5	156.5	141.5

Dimensions of geared motors

Type	D063			D071			D080		
	a	m	n	a	m	n	a	m	n
F102	∅140	129.5	102.0	∅140	129.5	102.0	∅160	133.5	102.0
F202	∅140	153.0	131.0	∅140	153.0	131.0	∅160	157.0	131.0
F203	∅140	190.0	131.0	–	–	–	–	–	–
F302	–	–	–	∅140	169.5	149.5	∅160	173.5	149.5
F303	∅140	206.5	149.5	∅140	206.5	149.5	–	–	–
F402	–	–	–	–	–	–	∅160	188.5	169.0
F403	–	–	–	∅140	221.5	169.0	∅160	231.5	132.0
F603	–	–	–	–	–	–	∅160	262.5	196.0

Type	IE3D080			IE3D090			IE3D100			IE3D112			IE3D132		
	a	m	n	a	m	n	a	m	n	a	m	n	a	m	n
F102	∅160	133.5	102.0	∅160	133.5	102.0	–	–	–	–	–	–	–	–	–
F202	∅160	157.0	131.0	∅160	157.0	131.0	∅200	159.0	131.0	∅200	159.0	131.0	–	–	–
F302	∅160	173.5	149.5	∅160	173.5	149.5	∅200	175.5	149.5	∅200	175.5	149.5	–	–	–
F402	∅160	188.5	169.0	∅160	188.5	169.0	∅200	190.5	169.0	∅200	190.5	169.0	∅250	193.5	169.0
F403	∅160	231.5	132.0	–	–	–	–	–	–	–	–	–	–	–	–
F602	∅160	219.5	196.0	∅160	219.5	196.0	∅200	221.5	196.0	∅200	221.5	196.0	∅250	224.5	196.0
F603	∅160	262.5	196.0	∅160	262.5	196.0	–	–	–	–	–	–	–	–	–

3.3.10 S shaft design (hollow shaft with shrink disk), Q housing design (square flange)

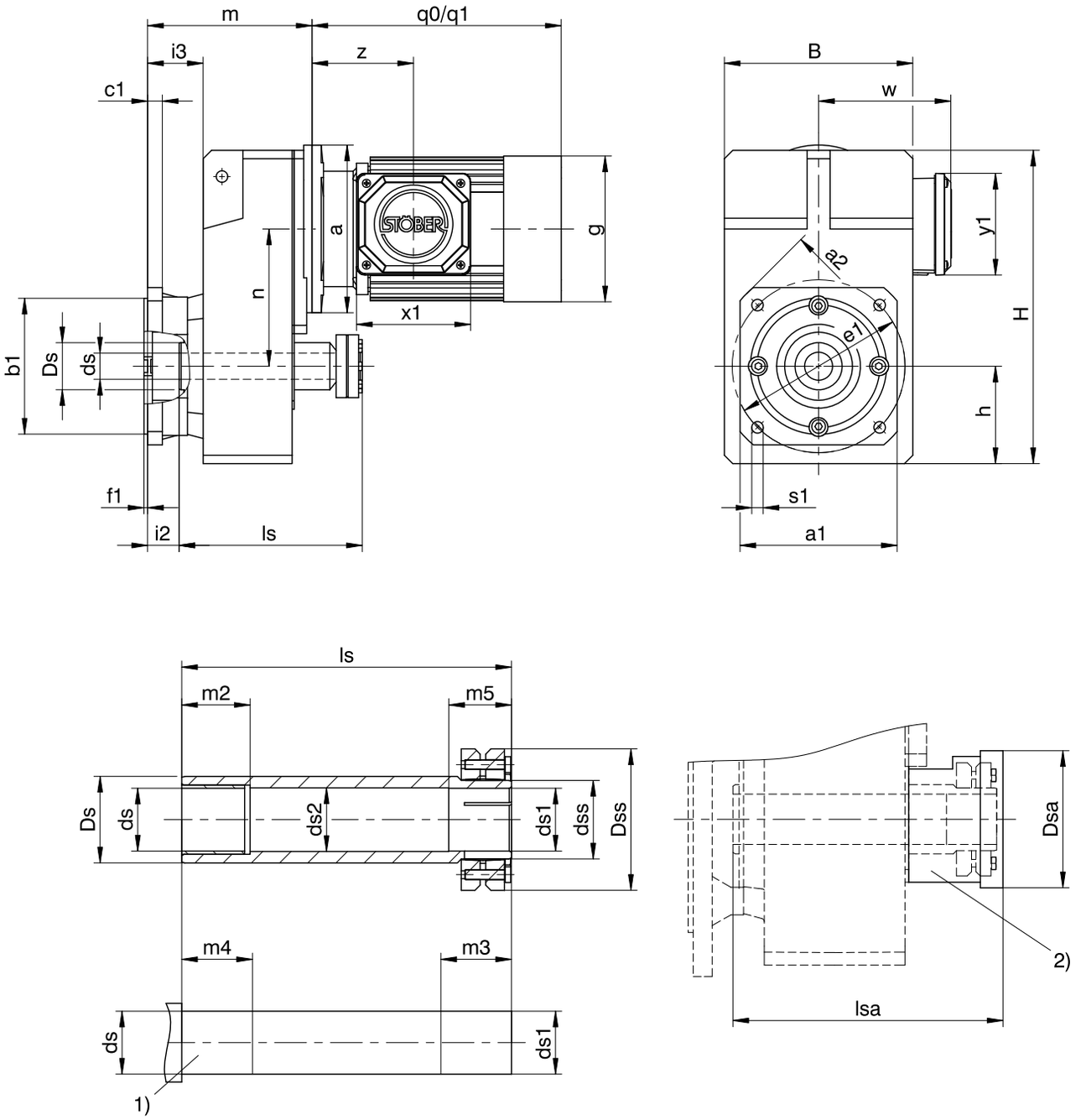

q0	Applies to motors without brake.	q1	Applies to motors with brake.
1)	Machine shaft: The dimension ls must meet or exceed the specified value.	2)	Cover (optional)

Dimensions of gear units

Type	□a1	□a2	Øb1	B	c1	Ød	Ød1	Ød2	Ødss	ØDs	ØDsa	ØDss	Øe1	f1	h	H	i2	i3	ls	lsa	m2	m3	m4	m5	Øs1
F1	125	160	110_{j6}	145	10	20_{h9}	20_{h9}^{H7}	20.5	24	35	63	50	130	3.5	74	238.0	25.5	44.5	146	150	20	31	25	26	9
F2	150	195	130_{j6}	180	14	25_{h9}	25_{h9}^{H7}	25.5	30	45	73	60	165	3.5	93	299.0	30.0	53.0	175	180	20	37	25	32	11
F3	200	260	180_{j6}	206	15	30_{h9}	30_{h9}^{H7}	30.5	36	50	83	72	215	4.0	106	335.5	31.5	56.5	192	196	25	37	30	32	14
F4	200	260	180_{j6}	230	15	40_{h9}	40_{h9}^{H7}	40.5	50	55	108	90	215	4.0	116	370.0	31.5	56.5	210	215	40	45	45	40	14
F6	250	325	230_{j6}	265	17	50_{h9}	50_{h9}^{H7}	50.5	62	70	128	106	265	4.0	137	433.0	29.5	60.5	248	251	40	47	45	42	14

Dimensions of motors

Type	g	q0	q1	w	x1	y1	z
D063K04	109	179	231	115	109.0	97.0	81.0
D063M04	109	179	231	115	109.0	97.0	81.0
D071K04	124	208	260	120	109.0	97.0	94.0
D071K02	124	208	260	120	109.0	97.0	94.0
D071L04	124	208	260	120	109.0	97.0	94.0
D071L02	124	208	260	120	109.0	97.0	94.0
D080K04	139	238	295	128	109.0	97.0	97.0

Type	g	q0	q1	w	x1	y1	z
IE3D080K02	139	238	295	128	109.0	97.0	97.0
IE3D080L04	157	283	351	137	109.0	97.0	107.0
IE3D080LX02	157	283	351	137	109.0	97.0	107.0
IE3D090S04	177	310	380	146	120.0	109.0	114.0
IE3D090S02	157	283	351	137	120.0	109.0	107.0
IE3D090LX04	177	365	435	146	120.0	109.0	114.0
IE3D090L02	177	310	380	146	120.0	109.0	114.0
IE3D100KX04	196	404	491	155	120.0	109.0	120.0
IE3D100L02	196	340	427	155	120.0	109.0	120.0
IE3D100LX04	196	444	531	155	120.0	109.0	120.0
IE3D112M02	196	374	461	155	120.0	109.0	120.0
IE3D112M04	217	424	521	178	146.5	156.5	134.0
IE3D132S04	258	476	591	199	146.5	156.5	141.5
IE3D132M04	258	526	641	199	146.5	156.5	141.5

Dimensions of geared motors

Type	D063			D071			D080		
	a	m	n	a	m	n	a	m	n
F102	∅140	129.5	102.0	∅140	129.5	102.0	∅160	133.5	102.0
F202	∅140	153.0	131.0	∅140	153.0	131.0	∅160	157.0	131.0
F203	∅140	190.0	131.0	–	–	–	–	–	–
F302	–	–	–	∅140	169.5	149.5	∅160	173.5	149.5
F303	∅140	206.5	149.5	∅140	206.5	149.5	–	–	–
F402	–	–	–	–	–	–	∅160	188.5	169.0
F403	–	–	–	∅140	221.5	169.0	∅160	231.5	132.0
F603	–	–	–	–	–	–	∅160	262.5	196.0

Type	IE3D080			IE3D090			IE3D100			IE3D112			IE3D132		
	a	m	n	a	m	n	a	m	n	a	m	n	a	m	n
F102	∅160	133.5	102.0	∅160	133.5	102.0	–	–	–	–	–	–	–	–	–
F202	∅160	157.0	131.0	∅160	157.0	131.0	∅200	159.0	131.0	∅200	159.0	131.0	–	–	–
F302	∅160	173.5	149.5	∅160	173.5	149.5	∅200	175.5	149.5	∅200	175.5	149.5	–	–	–
F402	∅160	188.5	169.0	∅160	188.5	169.0	∅200	190.5	169.0	∅200	190.5	169.0	∅250	193.5	169.0
F403	∅160	231.5	132.0	–	–	–	–	–	–	–	–	–	–	–	–
F602	∅160	219.5	196.0	∅160	219.5	196.0	∅200	221.5	196.0	∅200	221.5	196.0	∅250	224.5	196.0
F603	∅160	262.5	196.0	∅160	262.5	196.0	–	–	–	–	–	–	–	–	–

3.4 Type designation

In this chapter, you can find an explanation of the type designation with the associated options.

Additional ordering information not included in the type designation can be found at the end of the chapter.

Sample code

F	2	0	2	A	G	0280	IE3D080L04

Explanation

Code	Designation	Design
F	Type	Offset helical gear unit
2	Size	2 (example)
0	Generation	Generation 0
2	Stages	Two-stage
3		Three-stage
A	Shaft	Hollow shaft with keyway
S		Hollow shaft with shrink ring
V		Solid shaft
G	Housing	Pitch circle diameter
F		Round flange
Q		Square flange
GN		Pitch circle diameter + side fastening
0280	Transmission ratio (i x 10 rounded)	i = 28.11 (example)
IE3D080	Motor	IE3D asynchronous motor
L04		
D080K04		Asynchronous motor

In order to complete the type designation, also specify:

- A detailed type designation of the motor, see the chapter [▶ 5.4]
- The mounting position, see the chapter [▶ 3.5.4]
- The position of the terminal box, see the chapter [▶ 3.5.6]

3.5 Product description

3.5.1 Housing design

Pitch circle diameter G	Round flange F
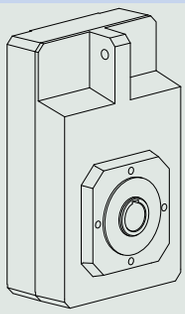	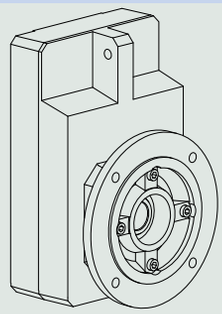

Square flange Q	Pitch circle diameter + side fastening GN
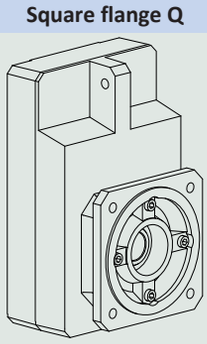	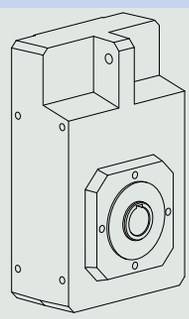

	G	F	Q	GN
F1	✓	✓	✓	✓
F2	✓	✓	✓	✓
F3	✓	✓	✓	✓
F4	✓	✓	✓	✓
F6	✓	✓	✓	✓

3.5.2 Combinatorial shaft/housing design

		Housing design			
Shaft design	**Code**	**G**	**F**	**Q**	**GN**
Hollow shaft with keyway	**A**	AG	AF	AQ	AGN
Hollow shaft with shrink ring	**S**	SG	SF	SQ	SGN
Solid shaft	**V**	–	VF	VQ	–

3.5.3 Installation conditions

Hollow shaft

The hollow shaft hole tolerance is ISO H7. The tolerance of the machine shaft must be ISO k6.

Take care to align the machine shaft with the gear unit hollow shaft when attaching the gear unit.

Maximum deviation ≤ 0.03 mm.

For simpler assembly and disassembly of the machine shaft, the hollow shafts are equipped with a spiral groove (as a grease deposit).

A hardened, threaded keeper plate is included in the scope of delivery. You also have the option to order the hollow shaft without a keeper plate.

Hollow shaft with shrink ring

The tolerance of the hollow shaft hole is ISO H7.

The machine shaft must be ISO h9.

Select a material for the machine shaft with a permitted surface pressure of $p \geq 325\ N/mm^2$.

Possible materials:

- C45E +QT
- 42CrMo4

Fastening the gear units on the machine side using the pitch circle diameter

The specified torques and forces only apply when fastening gear units at the machine side using screws of quality 10.9. In addition, the gear unit housings must be adjusted at the pilot. The machine-side fit must be H7.

3.5.4 Mounting positions

The following table shows the standard mounting positions.

The numbers identify the gear unit sides. The mounting position is defined by the gear side facing downwards.

EL1	EL2	EL3
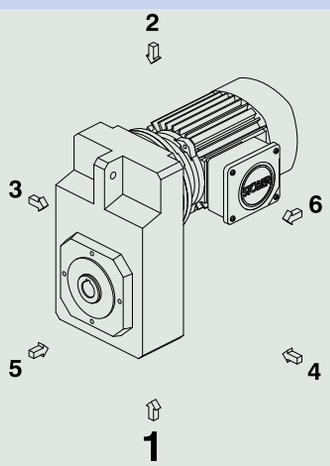	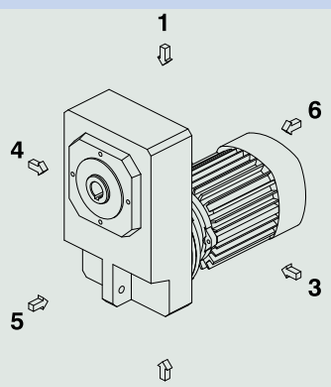	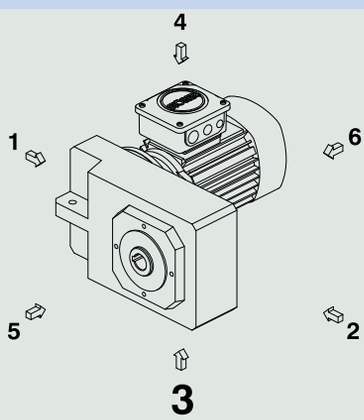
EL4	**EL5**	**EL6**
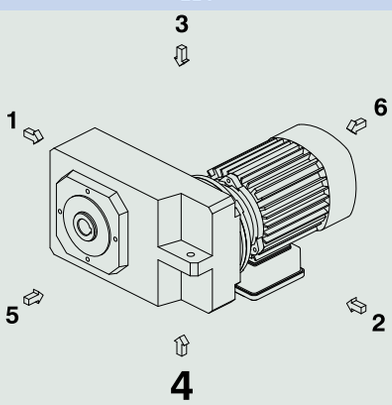	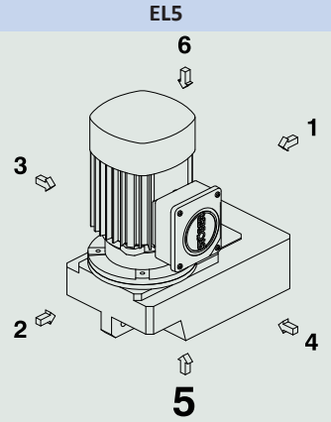	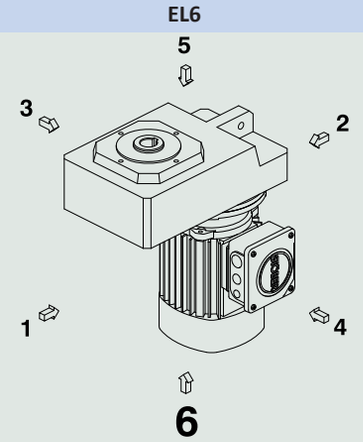

Since the lubricant filling volume of the gear unit depends on the mounting position, the mounting position must be specified when ordering.

3.5.5 Lubricants

STOBER fills the gear units with the amount and type of lubricant specified on the nameplate. The filling volume and the structure of the gear units depend on the mounting position.

Only install the gear units in the intended mounting position! Reposition the gear units only after consulting STOBER. Otherwise, STOBER assumes no liability for the gear units.

3.5.6 Position of the terminal box

Mounting position EL1	Mounting position EL4
Terminal box in the 0° position (standard)	Terminal box in the 0° position (standard)
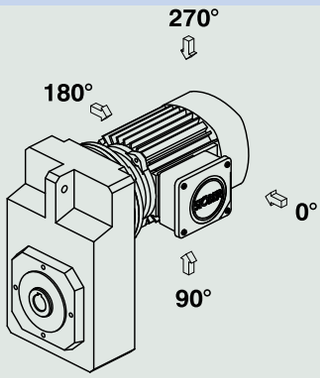	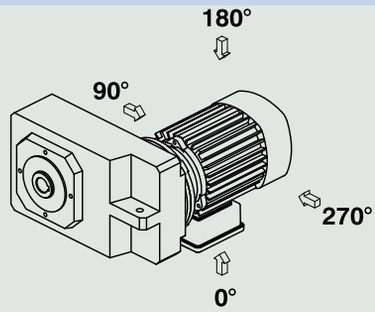

Indicate variations for your geared motor in the purchase order.

Note that the terminal box position rotates along with the geared motor if the geared motor rotates to another mounting position.

3.5.7 Other product features

Feature	Value
Max. permitted gear unit temperature (on the surface of the gear unit)	≤ 80 °C
Paint	RAL 7035 light gray Optional selection of various RAL colors.
(ATEX) Directive 2014/34/EU	You can get asynchronous motors for use in potentially explosive atmospheres on request.
Protection class	IP56

3.5.8 Direction of rotation

Solid shaft (V), hollow shaft with keyway (A), hollow shaft with shrink ring (S)

F102 – F602	F203 – F603
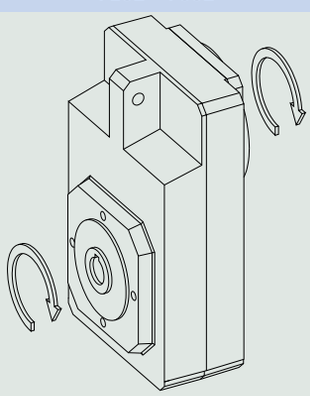	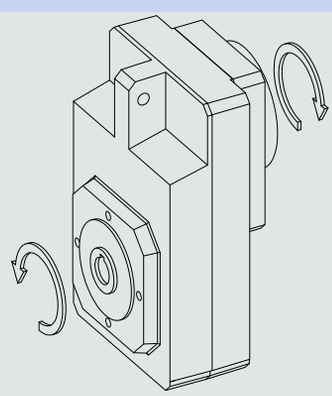
The input and output rotate in the same direction.	The input and output rotate in opposite directions.

The pictures show mounting position EL1.

3.6 Project configuration

Project your drives using the information in this chapter. In doing so, observe the limit conditions in this chapter to ensure a safe design.

An explanation of the formula symbols can be found in Chapter [▷ 13.1]

Determine the following for your application:

- The actual torque M_{2N*}
- The actual speed n_{2*}
- The operating mode operating factor fB_{op}
- The run-time operating factor fB_t
- The motor operating factor fB_{mot}
- The duty cycle ED in %

$$ED = \frac{t_{op}}{T} \cdot 100\%$$

For the S4 and S8 operating mode:

- The mass moment of inertia J_{2*}

$$J_{1*} = \frac{J_{2*}}{i^2}$$

Calculate the motor rating necessary for your application:

$$P_{N*} = \frac{M_{2N*} \cdot n_{2*} \cdot fB_{mot}}{9550}$$

Using the determined values and the calculated motor rating, select a suitable drive from the selection table.

Then check the following conditions:

$$M_{2N*} \cdot fB_{op} \cdot fB_t < M_{2N} \cdot S$$

$$P_N* < P_N$$

Operating factors

Run time	fB_t
Daily run time ≤ 8 h	1.00
Daily run time ≤ 16 h	1.15
Daily run time ≤ 24 h	1.20

Operating mode	Characteristic output curve	ED	fB_{op}	fB_{mot}
S1 Continuous operation with soft start • Start time up to 30 s	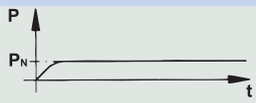	100 %	1.00	1.00
S1 Continuous operation with normal start • Asynchronous motors with direct switch-on or dynamic loading • Start time up to 30 s	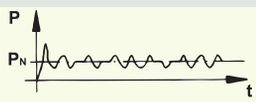	100 %	1.25	1.00
S1 Continuous operation with high-load start • Start time up to 30 s	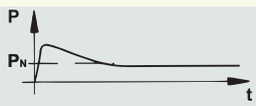	100 %	1.25	1.25
S2 brief operation • Operating time t_{op} ≤ 3 minutes	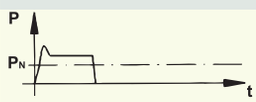	≤ 30 %	0.75	0.75
S3 Periodic cyclic operation	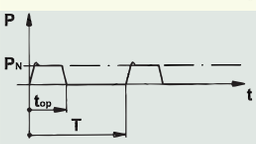	≤ 25 %	0.70	0.70
• Cycle time T ≤ 10 minutes		≤ 40 %	1.00	1.00
• Cyclic operation with braking motor		≤ 60 %	1.25	1.25
• Low additional flywheel weights $J_{1*} < 0,5 \cdot J_1$				
S4 Periodic cyclic operation with the effect of the start-up process • Cycle time T ≤ 10 minutes • Cyclic operation with braking motor • Larger additional flywheel weights	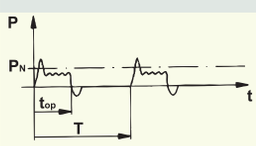	40 %	$J_{1*} \le J_1$: 1.40 $J_{1*} \sim 3 \cdot J_1$: 1.60	1.40
S6 Uninterrupted periodic operation	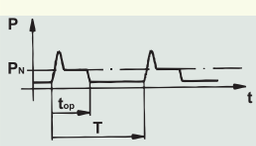	100 %	1.25	1.00
S6 Uninterrupted periodic operation with short-term loading • Low speeds • Low additional flywheel weights $J_{1*} < 0,5 \cdot J_1$	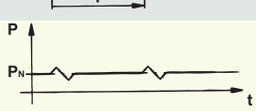	100 %	1.40	1.00
S6 Uninterrupted periodic operation with impact loading • High speeds • Large additional flywheel weights	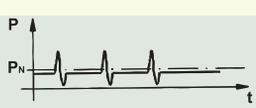	100 %	1.60	1.25
S8 Uninterrupted periodic operation • With load changes • With speed changes	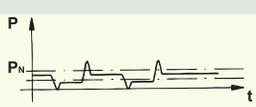	100 %	$J_{1*} \le J_1$: 1.40 $J_{1*} \sim 3 \cdot J_1$: 1.60	$J_{1*} \le J_1$: 1.25 $J_{1*} \sim 3 \cdot J_1$: 1.40
S9 Non-periodic operation • With load changes • With speed changes	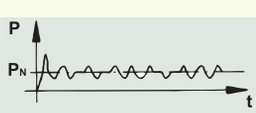	100 %	$J_{1*} \le J_1$: 1.40 $J_{1*} \sim 3 \cdot J_1$: 1.60	$J_{1*} \le J_1$: 1.25 $J_{1*} \sim 3 \cdot J_1$: 1.40
S10 Operation with individual constant loads	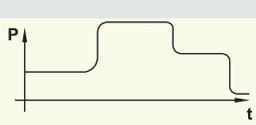	100 %	1.00	1.00

Tab. 1: Operating factors for operating modes S1 to S10

3.6.1 Permitted shaft loads for the output shaft

The values specified in the tables apply to the permitted shaft loads:

- For shaft dimensions in accordance with the catalog
- For output speeds $n_{2m*} \leq 20$ rpm ($F_{2axN} = F_{2ax20}$; $F_{2radN} = F_{2rad20}$; $M_{2kN} = M_{2k20}$)
- Only if radial forces on the gear unit are stabilized by its pilots for the pitch circle diameter and flange housing design

3.6.1.1 V shaft design

Permitted shaft loads for V shaft design (solid shaft)

Type	z_2 [mm]	F_{2ax20} [N]	F_{2rad20} [N]	$F_{2rad,acc}$ [N]	M_{2k20} [Nm]	$M_{2k,acc}$ [Nm]
F1	35.0	1100	4200	4200	260	260
F2	41.0	1400	5400	5400	400	400
F3	43.0	1900	7500	7500	600	600
F4	44.0	2350	9250	9250	800	800
F6	44.0	3100	12500	12500	1200	1200

For other output speeds, download diagrams at http://configurator.stoeber.de.

The following applies to output speeds $n_{2m*} > 20$ rpm:

$$F_{2axN} = \frac{F_{2ax20}}{\sqrt[3]{\frac{n_{2m*}}{20\ \text{rpm}}}} \qquad F_{2radN} = \frac{F_{2rad20}}{\sqrt[3]{\frac{n_{2m*}}{20\ \text{rpm}}}} \qquad M_{2kN} = \frac{M_{2k20}}{\sqrt[3]{\frac{n_{2m*}}{20\ \text{rpm}}}}$$

The values for F_{2ax20}, F_{2rad20} and M_{2k20} can be found in the table "Permitted shaft loads" in this chapter.

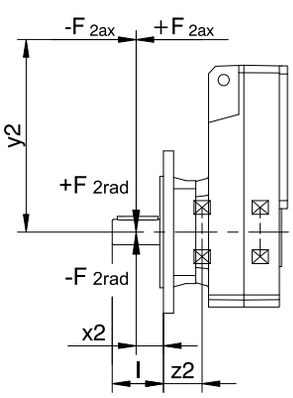

Fig. 1: Force application points for solid shaft

The specified values for F_{2rad20} are based on application of force at the middle of the output shaft: $x_2 = l/2$.

Shaft dimensions can be found in the "Dimensional drawings" chapter.

The following applies to other force application points:

$$M_{2k*} = \frac{2 \cdot F_{2ax*} \cdot y_2 + F_{2rad*} \cdot (x_2 + z_2)}{1000} \leq M_{2kN}$$

$$F_{2rad*} \leq F_{2radN}$$

$$F_{2ax*} \leq F_{2axN}$$

For applications with multiple axial and/or radial forces, you must add the forces as vectors.

In the event of EMERGENCY OFF operation (max. 1000 load changes), you can multiply the permitted forces and torques for F_{2ax20}, F_{2rad20} and M_{2k20} by a factor of two.

3.6.1.2 A and S shaft design

Permitted shaft loads for A shaft design (hollow shaft with keyway)

Type	z_2 [mm]	F_{2ax20} [N]	F_{2rad20} [N]	$F_{2rad,acc}$ [N]	M_{2k20} [Nm]	$M_{2k,acc}$ [Nm]
F1	30.0	900	4200	4200	175	175
F2	33.0	1200	5400	5400	250	250
F3	33.0	1350	7500	7500	375	375
F4	39.0	1900	9250	9250	550	550
F6	45.0	2200	12500	12500	800	800

Permitted shaft loads for S shaft design (hollow shaft with shrink ring)

Type	z_2 [mm]	F_{2ax20} [N]	F_{2rad20} [N]	$F_{2rad,acc}$ [N]	M_{2k20} [Nm]	$M_{2k,acc}$ [Nm]
F1	30.0	900	4200	4200	175	175
F2	33.0	1200	5400	5400	250	250
F3	33.0	1350	7500	7500	375	375
F4	39.0	1900	9250	9250	550	550
F6	45.0	2200	12500	12500	800	800

For other output speeds, download diagrams at http://configurator.stoeber.de.

The following applies to output speeds n_{2m*} > 20 rpm:

$$F_{2axN} = \frac{F_{2ax20}}{\sqrt[3]{\frac{n_{2m*}}{20\ \text{rpm}}}} \qquad F_{2radN} = \frac{F_{2rad20}}{\sqrt[3]{\frac{n_{2m*}}{20\ \text{rpm}}}} \qquad M_{2kN} = \frac{M_{2k20}}{\sqrt[3]{\frac{n_{2m*}}{20\ \text{rpm}}}}$$

The values for F_{2ax20}, F_{2rad20} and M_{2k20} can be found in the table "Permitted shaft loads" in this chapter.

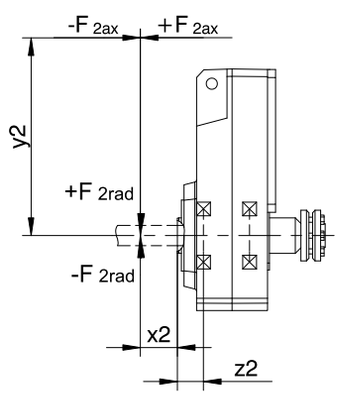

Fig. 2: Force application points for hollow shaft

You can determine the permitted radial forces from the permitted breakdown torque M_{2kN}. The actual radial forces may not exceed the permitted radial forces. The permitted radial forces are in relation to the end of the hollow shaft (x2 = 0).

$$M_{2k*} = \frac{2 \cdot F_{2ax*} \cdot y_2 + F_{2rad*} \cdot (x_2 + z_2)}{1000} \leq M_{2kN}$$

$$F_{2ax*} \leq F_{2axN}$$

For applications with multiple axial and/or radial forces, you must add the forces as vectors.

In the event of EMERGENCY OFF operation (max. 1000 load changes), you can multiply the permitted forces and torques for F_{2ax20}, F_{2rad20} and M_{2k20} by a factor of two.

3.6.2 Radial shaft seal rings

Leak-proofness

Our gear units are equipped with high-quality radial shaft seal rings and checked for leak-proofness. However, a leak cannot be fully ruled out over the length of use of a gear unit. If you use a gear unit with goods incompatible with the lubricant, you must take measures to prevent direct contact with the gear unit lubricant in case of a leak.

3.7 Additional documentation

Additional documentation related to the product can be found at http://www.stoeber.de/en/downloads/

Enter the ID of the documentation in the Search... field.

Documentation	ID
Operating manual for C/F/K/S gear units and gear motors	443027_en

4 K helical bevel geared motors

Table of contents

4.1 Overview ... 98

4.2 Selection tables ... 99

4.3 Dimensional drawings ... 119

4.3.1 A shaft design (hollow shaft), G housing design (pitch circle diameter) ... 120

4.3.2 A shaft design (hollow shaft), NG housing design (base + pitch circle diameter) ... 124

4.3.3 A shaft design (hollow shaft), GD housing design (pitch circle diameter + torque arm bracket) ... 128

4.3.4 A shaft design (hollow shaft), NGD housing design (foot + pitch circle diameter + torque arm bracket) ... 132

4.3.5 A shaft design (hollow shaft), F housing design (round flange) ... 134

4.3.6 A shaft design (hollow shaft), NF housing design (base + round flange) ... 138

4.3.7 S shaft design (hollow shaft with shrink disk), G housing design (pitch circle diameter) ... 142

4.3.8 S shaft design (hollow shaft with shrink disk), NG housing design (base + pitch circle diameter) ... 146

4.3.9 S shaft design (hollow shaft with shrink disk), GD housing design (pitch circle diameter + torque arm bracket) ... 150

4.3.10 S shaft design (hollow shaft with shrink disk), NGD housing design (foot + pitch circle diameter + torque arm bracket) ... 154

4.3.11 S shaft design (hollow shaft with shrink disk), F housing design (round flange) ... 156

4.3.12 S shaft design (hollow shaft with shrink disk), NF housing design (base + round flange) ... 160

4.3.13 A shaft design (solid shaft), G housing design (pitch circle diameter) ... 164

4.3.14 V shaft design (solid shaft), NG housing design (base + pitch circle diameter) ... 168

4.3.15 V shaft design (solid shaft), F housing design (round flange) ... 172

4.3.16 V shaft design (solid shaft), NF housing design (base + round flange) ... 176

4.3.17 Oil expansion tank ... 179

4.4 Type designation ... 180

4.5 Product description ... 181

4.5.1 Housing design ... 181

4.5.2 Combinatorial shaft/housing design ... 182

4.5.3 Installation conditions ... 182

4.5.4 Mounting positions ... 183

4.5.5 Lubricants ... 184

4.5.6 Position of the terminal box ... 184

4.5.7 Other product features ... 185

4.5.8 Losses due to splashing ... 185

4.5.9 Maintenance ... 185

4.5.10 Direction of rotation ... 186

4.6 Project configuration ... 188

4.6.1 Permitted shaft loads for the output shaft ... 190

4.6.2 Radial shaft seal rings ... 192

4.6.3 Oil expansion tank ... 192

4.7 Additional documentation ... 192

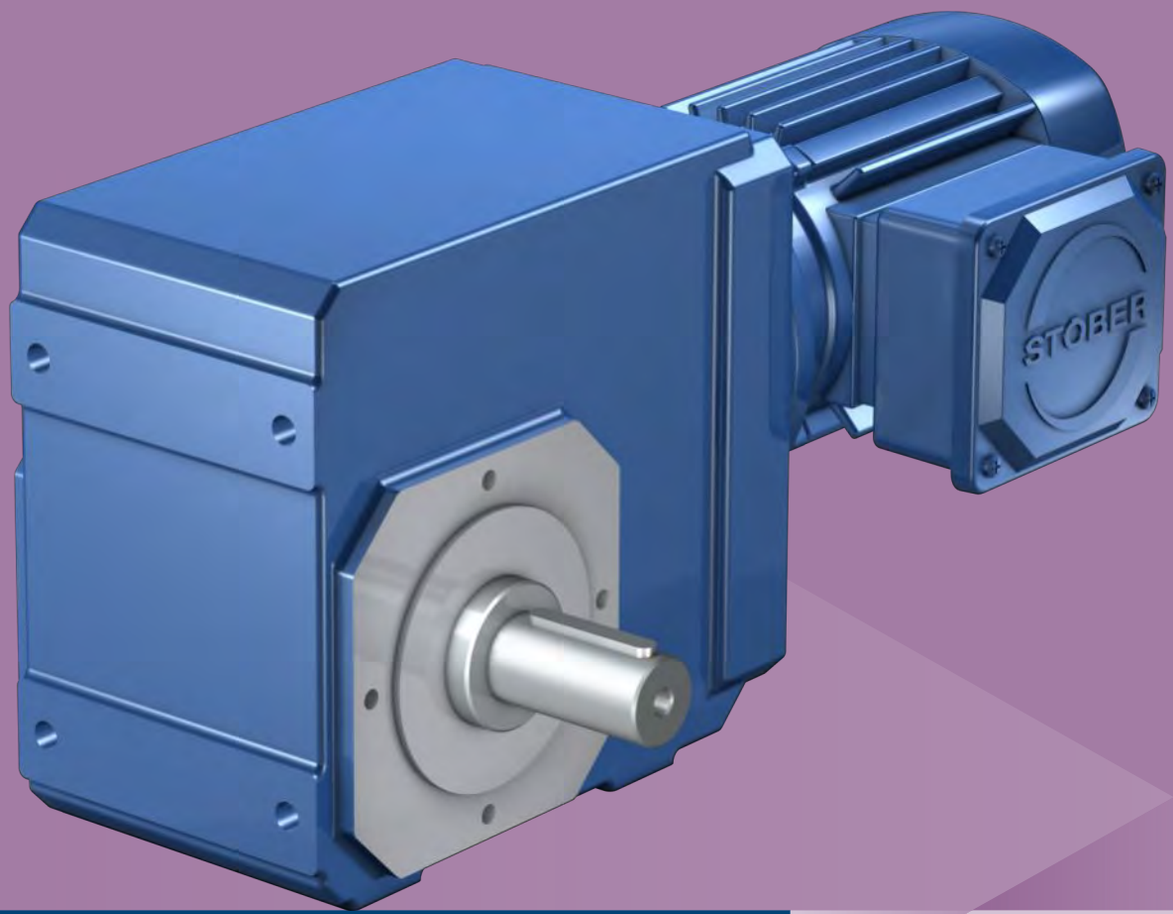

4 Helical bevel geared motors K

4.1 Overview

Highly rigid helical-geared right-angle geared motor

Features

Power density	★★☆☆☆
Backlash	★★★☆☆
Price category	€€
Shaft load	★★★☆☆
Smooth operation	★★★☆☆
Torsional stiffness	★★☆☆☆
Mass moment of inertia	★★★★★
Helical gearing	✓
Maintenance-free (K1 – K4)	✓
FKM seal ring at the input	✓
Reinforced output bearing (K5 – K8)	✓ (on request)

Key: ★☆☆☆☆ good | ★★★★★ excellent
€ Economy | €€€€€ Premium

Technical data

P_N	0.12 – 45 kW
i	4 – 381
M_{2N}	6.7 – 13970 Nm
η_{get}	≤ 97 %

4.2 Selection tables

The technical data specified in the selection tables applies to:

- Installation altitudes up to 1000 m above sea level
- Surrounding temperatures from 0 °C to 40 °C
- Drives with self-ventilated motors
- Weight specification for mounting position EL1, housing design G

You can receive asynchronous geared motors with low output speed on request.

Asynchronous geared motors are ideal for operation on a drive controller (87 Hz). More information can be found in chapter [▷ 5.6.2]

An explanation of the formula symbols can be found in the chapter [▷ 13.1].

n_2 50 Hz [rpm]	S 50 Hz	n_2 87 Hz [rpm]	S 87 Hz	M_{2N} [Nm]	Type	m [kg]	i	i_{exakt}	J_1 [10^{-4}kgm²]
P_N (50 Hz) = 0,12 kW, P_N (87 Hz) = 0,21 kW									
20	1.2	34	1.2	57	K102_0700 D063K04	14.5	70.03	2451/35	1.9
24	1.9	42	1.9	46	K102_0560 D063K04	14.5	56.10	1178/21	1.9
27	1.2	47	1.2	41	K102_0500 D063K04	14.5	50.31	5031/100	1.9
29	2.1	51	2.1	38	K102_0470 D063K04	14.5	46.92	2299/49	1.9
34	1.9	59	1.9	33	K102_0400 D063K04	14.5	40.30	403/10	1.9
39	2.4	68	2.4	29	K102_0350 D063K04	14.5	35.11	3686/105	1.9
41	2.1	70	2.1	27	K102_0340 D063K04	14.5	33.71	4719/140	1.9
49	2.8	85	2.8	23	K102_0280 D063K04	14.5	28.05	589/21	2.0
54	2.4	94	2.4	21	K102_0250 D063K04	14.5	25.22	1261/50	1.9
59	3.2	102	3.2	19	K102_0230 D063K04	14.5	23.27	1140/49	2.0
68	2.8	118	2.8	16	K102_0200 D063K04	14.5	20.15	403/20	2.0
78	3.3	135	3.3	14	K102_0175 D063K04	14.5	17.56	2090/119	2.0
82	3.2	142	3.2	14	K102_0165 D063K04	14.5	16.71	117/7	2.0
P_N (50 Hz) = 0,18 kW, P_N (87 Hz) = 0,31 kW									
6.2	1.0	11	1.0	263	K303_2180 D063M04	32.3	218.2	38399/176	2.5
7.5	0.92	13	0.92	218	K203_1810 D063M04	25.3	181.0	86903/480	2.5
7.5	1.6	13	1.6	218	K303_1810 D063M04	32.3	181.0	86903/480	2.5
10	2.0	17	2.0	164	K303_1360 D063M04	32.3	136.0	14147/104	2.5
10	1.2	17	1.2	163	K203_1350 D063M04	25.3	135.3	30315/224	2.5
12	1.5	22	1.5	132	K203_1090 D063M04	25.3	109.5	26273/240	2.5
12	2.0	22	2.0	132	K303_1090 D063M04	32.3	109.2	167743/1536	2.5
15	1.8	26	1.8	109	K203_0910 D063M04	25.3	90.79	46483/512	2.5
15	2.0	26	2.0	110	K303_0910 D063M04	32.3	91.23	26273/288	2.5
17	2.0	30	2.0	96	K203_0800 D063M04	25.3	79.62	26273/330	2.5
17	2.0	30	2.0	96	K303_0790 D063M04	32.3	79.42	167743/2112	2.5
19	0.81	34	0.81	86	K102_0700 D063M04	14.9	70.03	2451/35	2.4
20	2.0	34	2.0	82	K203_0680 D063M04	25.3	68.42	26273/384	2.5
21	2.0	36	2.0	80	K203_0660 D063M04	25.3	66.03	46483/704	2.5
24	1.2	42	1.2	69	K102_0560 D063M04	14.9	56.10	1178/21	2.4
25	2.0	43	2.0	66	K303_0550 D063M04	32.3	54.58	70735/1296	2.5
25	2.0	43	2.0	65	K203_0540 D063M04	25.3	54.25	135407/2496	2.5
27	0.81	47	0.81	61	K102_0500 D063M04	14.9	50.31	5031/100	2.4
27	2.0	47	2.0	60	K203_0500 D063M04	25.3	49.76	26273/528	2.5
28	2.0	48	2.0	59	K303_0490 D063M04	32.3	49.26	74777/1518	2.5
29	1.4	50	1.4	57	K102_0470 D063M04	14.9	46.92	2299/49	2.4
29	1.6	51	1.6	56	K202_0460 D063M04	22.4	46.23	1849/40	2.5
30	2.0	52	2.0	54	K203_0450 D063M04	25.3	45.22	58609/1296	2.5
34	1.2	58	1.2	49	K102_0400 D063M04	14.9	40.30	403/10	2.4
34	2.0	60	2.0	48	K203_0390 D063M04	25.3	39.45	135407/3432	2.5
39	1.6	67	1.6	43	K102_0350 D063M04	14.9	35.11	3686/105	2.4
40	1.4	70	1.4	41	K102_0340 D063M04	14.9	33.71	4719/140	2.4
40	1.6	70	1.6	41	K202_0340 D063M04	22.4	33.62	1849/55	2.5
48	1.9	84	1.9	34	K102_0280 D063M04	14.9	28.05	589/21	2.5
54	1.6	93	1.6	31	K102_0250 D063M04	14.9	25.22	1261/50	2.4
58	2.2	101	2.2	28	K102_0230 D063M04	14.9	23.27	1140/49	2.5
67	1.9	117	1.9	25	K102_0200 D063M04	14.9	20.15	403/20	2.5
77	2.2	134	2.2	21	K102_0175 D063M04	14.9	17.56	2090/119	2.5
81	2.2	141	2.2	20	K102_0165 D063M04	14.9	16.71	117/7	2.5
96	2.2	167	2.2	17	K102_0140 D063M04	14.9	14.11	494/35	2.6
108	2.2	187	2.2	15	K102_0125 D063M04	14.9	12.62	429/34	2.6

n_2 50 Hz [rpm]	S 50 Hz	n_2 87 Hz [rpm]	S 87 Hz	M_{2N} [Nm]	Type	m [kg]	i	i_{exakt}	J_1 [10^{-4}kgm²]
P_N (50 Hz) = 0,18 kW, P_N (87 Hz) = 0,31 kW									
134	2.2	232	2.2	12	K102_0100 D063M04	14.9	10.14	507/50	2.6
147	2.2	255	2.2	11	K102_0092 D063M04	14.9	9.249	1748/189	2.7
205	2.2	355	2.2	8.1	K102_0066 D063M04	14.9	6.644	299/45	2.8
P_N (50 Hz) = 0,25 kW, P_N (87 Hz) = 0,43 kW									
5.1	0.83	8.8	0.83	447	K403_2720 D071K04	46.7	271.6	86903/320	4.1
6.3	1.2	11	1.2	359	K403_2180 D071K04	46.7	218.2	38399/176	4.1
7.7	1.2	13	1.2	298	K303_1810 D071K04	33.9	181.0	86903/480	4.1
7.6	1.8	13	1.8	298	K403_1810 D071K04	46.7	181.4	14147/78	4.1
10	1.6	18	1.6	224	K303_1360 D071K04	33.9	136.0	14147/104	4.1
10	2.5	18	2.2	224	K403_1360 D071K04	46.7	136.1	196037/1440	4.1
10	0.90	18	0.90	223	K203_1350 D071K04	26.9	135.3	30315/224	4.1
13	1.1	22	1.1	180	K203_1090 D071K04	26.9	109.5	26273/240	4.1
13	1.9	22	1.9	180	K303_1090 D071K04	33.9	109.2	167743/1536	4.1
13	3.1	22	2.7	179	K403_1090 D071K04	46.7	108.8	62651/576	4.1
15	1.3	26	1.3	149	K203_0910 D071K04	26.9	90.79	46483/512	4.1
15	2.3	26	2.3	150	K303_0910 D071K04	33.9	91.23	26273/288	4.1
17	1.5	30	1.5	131	K203_0800 D071K04	26.9	79.62	26273/330	4.1
17	2.7	30	2.4	131	K303_0790 D071K04	33.9	79.42	167743/2112	4.1
20	1.1	35	1.1	116	K202_0690 D071K04	24.0	69.43	6665/96	4.0
20	1.8	35	1.8	116	K302_0690 D071K04	29.0	69.43	6665/96	4.1
20	1.8	35	1.8	113	K203_0680 D071K04	26.9	68.42	26273/384	4.1
20	3.1	35	3.1	111	K303_0680 D071K04	33.9	67.73	74777/1104	4.1
21	1.8	36	1.8	109	K203_0660 D071K04	26.9	66.03	46483/704	4.1
21	3.1	36	2.7	109	K303_0660 D071K04	33.9	66.35	26273/396	4.1
25	0.91	43	0.91	94	K102_0560 D071K04	16.5	56.10	1178/21	4.0
25	1.7	43	1.7	93	K202_0560 D071K04	24.0	55.54	1333/24	4.1
25	3.1	44	3.1	90	K303_0550 D071K04	33.9	54.58	70735/1296	4.1
26	2.2	44	2.2	89	K203_0540 D071K04	26.9	54.25	135407/2496	4.1
27	1.1	48	1.1	84	K202_0500 D071K04	24.0	50.49	6665/132	4.0
28	2.4	48	2.4	82	K203_0500 D071K04	26.9	49.76	26273/528	4.1
28	3.1	49	3.1	81	K303_0490 D071K04	33.9	49.26	74777/1518	4.1
30	1.3	51	1.3	78	K102_0470 D071K04	16.5	46.92	2299/49	4.0
30	2.6	52	2.6	77	K202_0460 D071K04	24.0	46.23	1849/40	4.1
31	2.7	53	2.7	74	K203_0450 D071K04	26.9	45.22	58609/1296	4.1
34	0.91	60	0.91	67	K102_0400 D071K04	16.5	40.30	403/10	4.0
34	1.7	59	1.7	67	K202_0400 D071K04	24.0	40.39	1333/33	4.1
35	3.1	61	3.1	65	K203_0390 D071K04	26.9	39.45	135407/3432	4.1
39	2.0	68	2.0	59	K102_0350 D071K04	16.5	35.11	3686/105	4.0
41	1.3	71	1.3	56	K102_0340 D071K04	16.5	33.71	4719/140	4.0
41	2.7	71	2.7	56	K202_0340 D071K04	24.0	33.62	1849/55	4.1
49	2.6	86	2.3	47	K102_0280 D071K04	16.5	28.05	589/21	4.1
55	2.3	95	2.3	42	K102_0250 D071K04	16.5	25.22	1261/50	4.0
60	3.0	103	2.6	39	K102_0230 D071K04	16.5	23.27	1140/49	4.1
69	2.9	119	2.8	34	K102_0200 D071K04	16.5	20.15	403/20	4.1
79	3.5	137	3.1	29	K102_0175 D071K04	16.5	17.56	2090/119	4.1
82	3.5	142	3.5	28	K202_0170 D071K04	24.0	16.86	2967/176	4.3
83	3.3	144	3.2	28	K102_0165 D071K04	16.5	16.71	117/7	4.1
98	3.5	170	3.5	24	K102_0140 D071K04	16.5	14.11	494/35	4.2
110	3.5	190	3.5	21	K102_0125 D071K04	16.5	12.62	429/34	4.2
120	3.5	207	3.5	19	K102_0115 D071K04	16.5	11.57	266/23	4.2
137	3.5	237	3.5	17	K102_0100 D071K04	16.5	10.14	507/50	4.2
150	3.5	259	3.5	15	K102_0092 D071K04	16.5	9.249	1748/189	4.3
165	3.5	286	3.5	14	K202_0084 D071K04	24.0	8.397	2494/297	4.8
167	3.5	289	3.5	14	K102_0083 D071K04	16.5	8.309	1911/230	4.3
208	3.5	361	3.5	11	K102_0066 D071K04	16.5	6.644	299/45	4.4
249	3.5	431	3.5	9.3	K102_0056 D071K04	16.5	5.568	1520/273	4.7
346	3.5	600	3.5	6.7	K102_0040 D071K04	16.5	4.000	4/1	4.9
P_N (50 Hz) = 0,37 kW, P_N (87 Hz) = 0,64 kW									
7.6	1.2	13	1.2	447	K403_1810 D071L04	47.7	181.4	14147/78	5.1
10	1.0	17	1.0	336	K303_1360 D071L04	34.9	136.0	14147/104	5.1
10	1.6	17	1.5	336	K403_1360 D071L04	47.7	136.1	196037/1440	5.1
13	1.3	22	1.3	269	K303_1090 D071L04	34.9	109.2	167743/1536	5.1
13	2.1	22	1.8	268	K403_1090 D071L04	47.7	108.8	62651/576	5.1
15	0.89	26	0.89	224	K203_0910 D071L04	27.9	90.79	46483/512	5.1
15	1.6	26	1.6	225	K303_0910 D071L04	34.9	91.23	26273/288	5.1

n_2 50 Hz [rpm]	S 50 Hz	n_2 87 Hz [rpm]	S 87 Hz	M_{2N} [Nm]	Type	m [kg]	i	i_{exakt}	J_1 [10^{-4}kgm²]
P_N (50 Hz) = 0,37 kW, P_N (87 Hz) = 0,64 kW									
15	2.1	26	2.0	225	K403_0910 D071L04	47.7	91.23	26273/288	5.1
17	1.0	30	1.0	196	K203_0800 D071L04	27.9	79.62	26273/330	5.1
17	1.8	30	1.6	196	K303_0790 D071L04	34.9	79.42	167743/2112	5.1
17	2.1	30	1.8	195	K403_0790 D071L04	47.7	79.11	62651/792	5.1
20	1.2	34	1.2	174	K302_0690 D071L04	30.0	69.43	6665/96	5.1
20	1.2	35	1.2	169	K203_0680 D071L04	27.9	68.42	26273/384	5.1
20	2.1	35	2.1	167	K303_0680 D071L04	34.9	67.73	74777/1104	5.1
21	1.2	36	1.2	163	K203_0660 D071L04	27.9	66.03	46483/704	5.1
21	2.1	36	1.8	164	K303_0660 D071L04	34.9	66.35	26273/396	5.1
25	1.1	43	1.1	139	K202_0560 D071L04	25.0	55.54	1333/24	5.1
25	2.1	43	2.1	135	K303_0550 D071L04	34.9	54.58	70735/1296	5.1
25	1.5	44	1.5	134	K203_0540 D071L04	27.9	54.25	135407/2496	5.1
28	1.6	48	1.6	123	K203_0500 D071L04	27.9	49.76	26273/528	5.1
28	2.1	48	2.1	121	K303_0490 D071L04	34.9	49.26	74777/1518	5.1
29	0.87	51	0.87	117	K102_0470 D071L04	17.5	46.92	2299/49	5.0
30	1.7	51	1.7	116	K202_0460 D071L04	25.0	46.23	1849/40	5.1
30	1.8	52	1.8	112	K203_0450 D071L04	27.9	45.22	58609/1296	5.1
34	1.1	59	1.1	101	K202_0400 D071L04	25.0	40.39	1333/33	5.1
35	2.1	60	2.1	97	K203_0390 D071L04	27.9	39.45	135407/3432	5.1
39	1.4	68	1.3	88	K102_0350 D071L04	17.5	35.11	3686/105	5.0
40	2.0	69	2.0	86	K202_0350 D071L04	25.0	34.55	1935/56	5.1
41	0.87	70	0.87	84	K102_0340 D071L04	17.5	33.71	4719/140	5.0
41	1.8	71	1.8	84	K202_0340 D071L04	25.0	33.62	1849/55	5.1
49	1.7	85	1.5	70	K102_0280 D071L04	17.5	28.05	589/21	5.1
54	1.5	94	1.5	63	K102_0250 D071L04	17.5	25.22	1261/50	5.0
55	2.0	94	2.0	63	K202_0250 D071L04	25.0	25.13	1935/77	5.1
59	2.0	102	1.7	58	K102_0230 D071L04	17.5	23.27	1140/49	5.1
68	1.9	118	1.9	50	K102_0200 D071L04	17.5	20.15	403/20	5.1
78	2.3	135	2.1	44	K102_0175 D071L04	17.5	17.56	2090/119	5.1
81	2.3	141	2.3	42	K202_0170 D071L04	25.0	16.86	2967/176	5.3
82	2.2	142	2.2	42	K102_0165 D071L04	17.5	16.71	117/7	5.1
97	2.3	168	2.3	35	K102_0140 D071L04	17.5	14.11	494/35	5.2
109	2.3	188	2.3	32	K102_0125 D071L04	17.5	12.62	429/34	5.2
118	2.3	205	2.3	29	K102_0115 D071L04	17.5	11.57	266/23	5.2
135	2.3	234	2.3	25	K102_0100 D071L04	17.5	10.14	507/50	5.2
148	2.3	257	2.3	23	K102_0092 D071L04	17.5	9.249	1748/189	5.3
163	2.3	283	2.3	21	K202_0084 D071L04	25.0	8.397	2494/297	5.8
165	2.3	286	2.3	21	K102_0083 D071L04	17.5	8.309	1911/230	5.3
206	2.3	357	2.3	17	K102_0066 D071L04	17.5	6.644	299/45	5.4
246	2.3	426	2.3	14	K102_0056 D071L04	17.5	5.568	1520/273	5.7
343	2.3	593	2.3	10	K102_0040 D071L04	17.5	4.000	4/1	5.9
418	4.7	–	–	8.2	K102_0066 D071K02	16.4	6.644	299/45	2.9
P_N (50 Hz) = 0,55 kW, P_N (87 Hz) = 0,95 kW									
3.7	1.4	6.4	1.4	1345	K714_3810 D080K04	110.3	381.0	195083/512	8.9
3.8	0.83	6.6	0.83	1302	K614_3690 D080K04	77.5	368.9	1700009/4608	8.9
4.1	1.4	7.0	1.4	1214	K714_3440 D080K04	110.3	344.1	44051/128	8.9
4.2	0.83	7.3	0.83	1176	K614_3330 D080K04	77.5	333.2	383873/1152	8.9
4.6	2.2	8.0	2.0	1076	K714_3050 D080K04	110.3	304.8	195083/640	9.0
4.7	0.85	8.1	0.85	1059	K514_3000 D080K04	56.6	300.0	756059/2520	8.9
4.8	1.4	8.2	1.4	1039	K614_2940 D080K04	77.5	294.4	3674213/12480	8.9
5.1	2.2	8.8	2.0	972	K714_2750 D080K04	110.3	275.3	44051/160	9.0
5.2	0.86	8.9	0.86	956	K514_2710 D080K04	56.6	271.0	24389/90	8.9
5.3	1.4	9.1	1.4	938	K614_2660 D080K04	77.5	265.9	829661/3120	8.9
5.6	2.3	9.7	2.3	885	K714_2510 D080K04	110.3	250.7	320943/1280	9.0
5.6	1.0	9.7	1.0	881	K514_2500 D080K04	56.6	249.6	729988/2925	8.9
5.7	1.7	9.8	1.7	869	K614_2460 D080K04	77.5	246.3	1261297/5120	8.9
6.2	2.3	11	2.3	799	K714_2260 D080K04	110.3	226.5	72471/320	9.0
6.2	1.1	11	1.1	795	K514_2250 D080K04	56.6	225.4	659344/2925	8.9
6.3	1.8	11	1.8	785	K614_2230 D080K04	77.5	222.5	284809/1280	8.9
7.3	2.3	13	2.3	681	K714_1930 D080K04	110.3	192.9	320943/1664	9.1
7.5	1.4	13	1.4	657	K514_1860 D080K04	56.6	186.2	26071/140	8.9
7.6	2.2	13	2.2	651	K614_1850 D080K04	77.5	184.6	383873/2080	9.0
7.8	0.83	14	0.83	642	K403_1790 D080K04	50.5	179.1	34916/195	8.9
8.0	2.3	14	2.3	615	K714_1740 D080K04	110.3	174.2	72471/416	9.1
8.3	1.5	14	1.5	594	K514_1680 D080K04	56.6	168.2	841/5	8.9

n_2 50 Hz [rpm]	S 50 Hz	n_2 87 Hz [rpm]	S 87 Hz	M_{2N} [Nm]	Type	m [kg]	i	i_{exakt}	J_1 [10^{-4}kgm²]
P_N (50 Hz) = 0,55 kW, P_N (87 Hz) = 0,95 kW									
8.4	2.3	15	2.3	588	K614_1670 D080K04	77.5	166.7	86681/520	9.0
9.2	2.3	16	2.3	535	K714_1520 D080K04	110.3	151.7	24273/160	9.3
9.4	1.7	16	1.7	526	K514_1490 D080K04	56.6	149.0	26071/175	9.0
9.4	2.3	16	2.3	523	K614_1480 D080K04	77.5	148.2	4551637/30720	9.0
10	2.3	18	2.3	484	K714_1370 D080K04	110.3	137.0	5481/40	9.3
10	1.9	18	1.9	475	K514_1350 D080K04	56.6	134.6	3364/25	9.0
10	1.1	18	1.1	482	K403_1340 D080K04	50.5	134.4	120959/900	8.9
10	2.3	18	2.3	472	K614_1340 D080K04	77.5	133.8	1027789/7680	9.0
11	2.0	19	2.0	441	K514_1250 D080K04	56.6	124.9	599633/4800	9.0
11	2.3	20	2.3	435	K614_1230 D080K04	77.5	123.2	1261297/10240	9.1
12	2.3	21	2.3	398	K514_1130 D080K04	56.6	112.8	135401/1200	9.0
13	2.3	22	2.3	393	K614_1110 D080K04	77.5	111.3	284809/2560	9.1
13	0.91	22	0.91	387	K303_1080 D080K04	37.7	107.8	103501/960	8.9
13	1.4	23	1.4	385	K403_1070 D080K04	50.5	107.4	38657/360	8.9
15	2.3	26	2.3	332	K514_0940 D080K04	56.6	94.15	338923/3600	9.1
16	1.1	27	1.1	323	K303_0900 D080K04	37.7	90.06	16211/180	8.9
16	1.7	27	1.7	323	K403_0900 D080K04	50.5	90.06	16211/180	8.9
16	2.3	29	2.3	300	K514_0850 D080K04	56.6	85.03	76531/900	9.1
18	1.2	31	1.2	281	K303_0780 D080K04	37.7	78.41	103501/1320	8.9
18	2.0	31	2.0	280	K403_0780 D080K04	50.5	78.10	38657/495	8.9
20	1.5	35	1.5	252	K402_0690 D080K04	46.3	69.34	5547/80	8.8
21	1.5	36	1.5	240	K303_0670 D080K04	37.7	66.87	46139/690	8.9
21	2.3	36	2.3	241	K403_0670 D080K04	50.5	67.30	21199/315	8.9
21	1.5	37	1.5	235	K303_0650 D080K04	37.7	65.50	32422/495	8.9
21	2.3	37	2.3	235	K403_0650 D080K04	50.5	65.50	32422/495	8.9
25	1.3	44	1.3	203	K302_0560 D080K04	32.8	55.71	2451/44	8.8
26	1.8	45	1.8	193	K303_0540 D080K04	37.7	53.88	8729/162	8.9
26	2.3	45	2.3	192	K403_0540 D080K04	50.5	53.69	38657/720	9.0
28	1.5	48	1.5	183	K402_0500 D080K04	46.3	50.43	5547/110	8.8
29	2.0	50	2.0	174	K303_0490 D080K04	37.7	48.63	184556/3795	8.9
30	1.2	52	1.2	168	K202_0460 D080K04	27.8	46.23	1849/40	8.8
30	2.0	52	2.0	168	K302_0460 D080K04	32.8	46.23	1849/40	8.9
31	2.2	54	2.2	161	K303_0450 D080K04	37.7	44.89	11223/250	8.9
35	1.3	60	1.3	147	K302_0410 D080K04	32.8	40.51	4902/121	8.8
36	2.3	62	2.3	140	K303_0390 D080K04	37.7	39.19	34916/891	8.9
39	2.3	68	2.3	128	K303_0360 D080K04	37.7	35.83	215/6	9.0
40	0.94	69	0.90	128	K102_0350 D080K04	20.3	35.11	3686/105	8.7
41	1.6	70	1.6	126	K202_0350 D080K04	27.8	34.55	1935/56	8.8
40	2.7	70	2.7	126	K302_0350 D080K04	32.8	34.73	903/26	9.0
42	1.3	72	1.3	122	K202_0340 D080K04	27.8	33.62	1849/55	8.8
42	2.0	72	2.0	122	K302_0340 D080K04	32.8	33.62	1849/55	8.9
43	2.3	74	2.3	117	K303_0330 D080K04	37.7	32.65	44892/1375	8.9
43	2.3	75	2.3	116	K403_0320 D080K04	50.5	32.39	2494/77	9.0
50	1.2	86	1.0	102	K102_0280 D080K04	20.3	28.05	589/21	8.8
50	2.0	87	1.9	102	K202_0280 D080K04	27.8	27.95	559/20	8.9
50	3.2	87	3.2	101	K302_0280 D080K04	32.8	27.88	3569/128	9.1
56	1.0	96	1.0	92	K102_0250 D080K04	20.3	25.22	1261/50	8.7
56	2.2	96	2.0	91	K202_0250 D080K04	27.8	25.13	1935/77	8.8
60	1.4	104	1.2	85	K102_0230 D080K04	20.3	23.27	1140/49	8.8
60	2.4	105	2.1	84	K202_0230 D080K04	27.8	23.18	2967/128	8.9
69	1.5	120	1.3	73	K102_0200 D080K04	20.3	20.15	403/20	8.8
69	2.7	119	2.3	74	K202_0200 D080K04	27.8	20.33	1118/55	8.9
80	1.7	138	1.4	64	K102_0175 D080K04	20.3	17.56	2090/119	8.8
80	3.0	139	2.6	64	K202_0175 D080K04	27.8	17.47	559/32	9.1
83	3.1	144	2.6	61	K202_0170 D080K04	27.8	16.86	2967/176	9.0
84	1.7	145	1.5	61	K102_0165 D080K04	20.3	16.71	117/7	8.8
99	1.9	172	1.6	51	K102_0140 D080K04	20.3	14.11	494/35	8.9
101	3.2	175	3.0	50	K202_0140 D080K04	27.8	13.85	2881/208	9.2
111	2.1	192	1.8	46	K102_0125 D080K04	20.3	12.62	429/34	8.9
121	2.2	210	1.9	42	K102_0115 D080K04	20.3	11.57	266/23	8.9
138	2.4	239	2.1	37	K102_0100 D080K04	20.3	10.14	507/50	8.9
151	2.6	262	2.2	34	K102_0092 D080K04	20.3	9.249	1748/189	9.0
167	3.2	289	3.2	31	K202_0084 D080K04	27.8	8.397	2494/297	9.5
168	2.8	292	2.3	30	K102_0083 D080K04	20.3	8.309	1911/230	9.0
209	3.2	363	3.2	24	K202_0067 D080K04	27.8	6.683	2279/341	9.8

n_2 50 Hz [rpm]	S 50 Hz	n_2 87 Hz [rpm]	S 87 Hz	M_{2N} [Nm]	Type	m [kg]	i	i_{exakt}	J_1 [10^{-4}kgm²]
P_N (50 Hz) = 0,55 kW, P_N (87 Hz) = 0,95 kW									
211	3.2	365	2.7	24	K102_0066 D080K04	20.3	6.644	299/45	9.1
233	3.2	404	2.9	22	K102_0060 D080K04	20.3	6.000	6/1	9.2
251	3.2	436	3.1	20	K102_0056 D080K04	20.3	5.568	1520/273	9.4
350	3.2	606	3.2	15	K102_0040 D080K04	20.3	4.000	4/1	9.6
418	3.2	–	–	12	K102_0066 D071L02	17.3	6.644	299/45	3.6
498	3.2	–	–	10	K102_0056 D071L02	17.3	5.568	1520/273	3.9
694	3.2	–	–	7.3	K102_0040 D071L02	17.3	4.000	4/1	4.1
P_N (50 Hz) = 0,75 kW, P_N (87 Hz) = 1,30 kW									
3.8	1.0	6.6	1.0	1793	K714_3810 IE3D080L04	116.7	381.0	195083/512	26
4.2	1.0	7.3	1.0	1619	K714_3440 IE3D080L04	116.7	344.1	44051/128	26
4.7	1.7	8.2	1.5	1434	K714_3050 IE3D080L04	116.7	304.8	195083/640	26
4.9	1.0	8.5	1.0	1385	K614_2940 IE3D080L04	83.9	294.4	3674213/12480	26
5.2	1.7	9.1	1.5	1295	K714_2750 IE3D080L04	116.7	275.3	44051/160	26
5.4	1.1	9.4	1.1	1251	K614_2660 IE3D080L04	83.9	265.9	829661/3120	26
5.8	1.9	10	1.8	1180	K714_2510 IE3D080L04	116.7	250.7	320943/1280	26
5.9	1.3	10	1.3	1159	K614_2460 IE3D080L04	83.9	246.3	1261297/5120	26
6.4	1.9	11	1.8	1066	K714_2260 IE3D080L04	116.7	226.5	72471/320	26
6.4	0.85	11	0.85	1061	K514_2250 IE3D080L04	63.0	225.4	659344/2925	26
6.5	1.4	11	1.4	1047	K614_2230 IE3D080L04	83.9	222.5	284809/1280	26
7.5	2.1	13	2.1	907	K714_1930 IE3D080L04	116.7	192.9	320943/1664	26
7.8	1.0	13	1.0	876	K514_1860 IE3D080L04	63.0	186.2	26071/140	26
7.8	1.7	14	1.7	868	K614_1850 IE3D080L04	83.9	184.6	383873/2080	26
8.3	2.1	14	2.1	820	K714_1740 IE3D080L04	116.7	174.2	72471/416	26
8.6	1.1	15	1.1	791	K514_1680 IE3D080L04	63.0	168.2	841/5	26
8.7	1.8	15	1.8	784	K614_1670 IE3D080L04	83.9	166.7	86681/520	26
9.5	2.5	16	2.5	714	K714_1520 IE3D080L04	116.7	151.7	24273/160	27
9.7	1.3	17	1.3	701	K514_1490 IE3D080L04	63.0	149.0	26071/175	26
9.8	2.1	17	2.1	697	K614_1480 IE3D080L04	83.9	148.2	4551637/30720	26
11	2.5	18	2.5	645	K714_1370 IE3D080L04	116.7	137.0	5481/40	27
11	1.4	19	1.4	633	K514_1350 IE3D080L04	63.0	134.6	3364/25	26
11	0.86	19	0.86	642	K403_1340 IE3D080L04	56.9	134.4	120959/900	26
11	2.3	19	2.3	630	K614_1340 IE3D080L04	83.9	133.8	1027789/7680	26
12	1.5	20	1.5	588	K514_1250 IE3D080L04	63.0	124.9	599633/4800	26
12	2.5	20	2.5	580	K614_1230 IE3D080L04	83.9	123.2	1261297/10240	26
13	1.7	22	1.7	531	K514_1130 IE3D080L04	63.0	112.8	135401/1200	26
13	2.8	22	2.7	523	K614_1110 IE3D080L04	83.9	111.3	284809/2560	26
13	1.1	23	1.1	513	K403_1070 IE3D080L04	56.9	107.4	38657/360	26
15	1.7	26	1.7	462	K513_0970 IE3D080L04	58.5	96.64	38657/400	26
15	2.4	26	2.4	456	K613_0950 IE3D080L04	80.0	95.41	293105/3072	27
15	2.0	27	2.0	443	K514_0940 IE3D080L04	63.0	94.15	338923/3600	26
16	0.81	28	0.81	430	K303_0900 IE3D080L04	44.1	90.06	16211/180	26
16	1.3	28	1.3	430	K403_0900 IE3D080L04	56.9	90.06	16211/180	26
17	1.7	29	1.7	417	K513_0870 IE3D080L04	58.5	87.29	8729/100	26
17	2.4	29	2.4	412	K613_0860 IE3D080L04	80.0	86.18	66185/768	27
17	2.3	29	2.3	400	K514_0850 IE3D080L04	63.0	85.03	76531/900	26
18	0.93	32	0.93	375	K303_0780 IE3D080L04	44.1	78.41	103501/1320	26
19	1.5	32	1.5	373	K403_0780 IE3D080L04	56.9	78.10	38657/495	26
19	2.4	32	2.4	371	K513_0780 IE3D080L04	58.5	77.59	26071/336	26
19	3.3	33	3.3	364	K613_0760 IE3D080L04	80.0	76.14	126697/1664	27
21	2.4	36	2.4	335	K513_0700 IE3D080L04	58.5	70.08	841/12	26
21	1.1	36	1.1	336	K402_0690 IE3D080L04	52.7	69.34	5547/80	26
21	3.3	36	3.3	329	K613_0690 IE3D080L04	80.0	68.77	28609/416	27
22	1.1	37	1.1	320	K303_0670 IE3D080L04	44.1	66.87	46139/690	26
21	1.7	37	1.7	322	K403_0670 IE3D080L04	56.9	67.30	21199/315	26
22	1.1	38	1.1	313	K303_0650 IE3D080L04	44.1	65.50	32422/495	26
22	1.8	38	1.8	313	K403_0650 IE3D080L04	56.9	65.50	32422/495	26
22	2.9	39	2.9	309	K513_0650 IE3D080L04	58.5	64.54	12586/195	27
25	3.2	43	3.2	279	K513_0580 IE3D080L04	58.5	58.30	11368/195	27
26	0.98	45	0.98	270	K302_0560 IE3D080L04	39.2	55.71	2451/44	26
26	1.6	45	1.6	270	K402_0560 IE3D080L04	52.7	55.71	2451/44	26
27	1.4	46	1.4	258	K303_0540 IE3D080L04	44.1	53.88	8729/162	26
27	2.1	47	2.1	257	K403_0540 IE3D080L04	56.9	53.69	38657/720	26
29	1.1	50	1.1	245	K402_0500 IE3D080L04	52.7	50.43	5547/110	26
30	1.5	51	1.5	232	K303_0490 IE3D080L04	44.1	48.63	184556/3795	26
30	2.4	51	2.4	234	K403_0490 IE3D080L04	56.9	48.94	169592/3465	26

n_2 50 Hz [rpm]	S 50 Hz	n_2 87 Hz [rpm]	S 87 Hz	M_{2N} [Nm]	Type	m [kg]	i	i_{exakt}	J_1 [10^{-4}kgm²]
P_N (50 Hz) = 0,75 kW, P_N (87 Hz) = 1,30 kW									
30	3.8	52	3.8	230	K513_0480 IE3D080L04	58.5	48.16	2697/56	27
31	0.89	54	0.89	224	K202_0460 IE3D080L04	34.2	46.23	1849/40	26
31	1.5	54	1.5	224	K302_0460 IE3D080L04	39.2	46.23	1849/40	26
31	2.4	54	2.4	225	K402_0460 IE3D080L04	52.7	46.31	602/13	26
32	1.6	56	1.6	215	K303_0450 IE3D080L04	44.1	44.89	11223/250	26
32	2.6	56	2.6	213	K403_0450 IE3D080L04	56.9	44.54	1247/28	26
33	3.8	58	3.8	208	K513_0440 IE3D080L04	58.5	43.50	87/2	27
36	0.98	62	0.98	196	K302_0410 IE3D080L04	39.2	40.51	4902/121	26
36	1.6	62	1.6	196	K402_0410 IE3D080L04	52.7	40.51	4902/121	26
37	1.9	64	1.9	187	K303_0390 IE3D080L04	44.1	39.19	34916/891	26
37	2.9	64	2.9	187	K403_0390 IE3D080L04	56.9	39.05	38657/990	26
40	2.0	70	2.0	171	K303_0360 IE3D080L04	44.1	35.83	215/6	26
42	1.2	72	1.2	168	K202_0350 IE3D080L04	34.2	34.55	1935/56	26
42	2.1	72	2.1	168	K302_0350 IE3D080L04	39.2	34.73	903/26	26
43	0.95	74	0.95	163	K202_0340 IE3D080L04	34.2	33.62	1849/55	26
43	1.5	74	1.5	163	K302_0340 IE3D080L04	39.2	33.62	1849/55	26
43	2.4	74	2.4	163	K402_0340 IE3D080L04	52.7	33.68	4816/143	26
44	2.2	77	2.2	156	K303_0330 IE3D080L04	44.1	32.65	44892/1375	26
45	3.0	77	3.0	155	K403_0320 IE3D080L04	56.9	32.39	2494/77	26
52	0.88	–	–	136	K102_0280 IE3D080L04	26.7	28.05	589/21	26
52	1.5	90	1.4	136	K202_0280 IE3D080L04	34.2	27.95	559/20	26
52	2.6	90	2.4	135	K302_0280 IE3D080L04	39.2	27.88	3569/128	26
58	1.6	100	1.5	122	K202_0250 IE3D080L04	34.2	25.13	1935/77	26
57	2.8	99	2.6	123	K302_0250 IE3D080L04	39.2	25.26	3612/143	26
62	1.0	108	0.88	113	K102_0230 IE3D080L04	26.7	23.27	1140/49	26
62	1.8	108	1.6	112	K202_0230 IE3D080L04	34.2	23.18	2967/128	26
62	3.1	107	2.7	113	K302_0230 IE3D080L04	39.2	23.29	559/24	26
72	1.1	124	0.96	98	K102_0200 IE3D080L04	26.7	20.15	403/20	26
71	2.0	123	1.7	99	K202_0200 IE3D080L04	34.2	20.33	1118/55	26
82	1.3	143	1.1	85	K102_0175 IE3D080L04	26.7	17.56	2090/119	26
83	2.2	143	1.9	85	K202_0175 IE3D080L04	34.2	17.47	559/32	26
86	2.3	148	1.9	82	K202_0170 IE3D080L04	34.2	16.86	2967/176	26
86	1.3	150	1.1	81	K102_0165 IE3D080L04	26.7	16.71	117/7	26
102	1.4	177	1.2	68	K102_0140 IE3D080L04	26.7	14.11	494/35	26
104	2.6	181	2.2	67	K202_0140 IE3D080L04	34.2	13.85	2881/208	27
115	1.6	198	1.3	61	K102_0125 IE3D080L04	26.7	12.62	429/34	26
114	2.8	197	2.3	62	K202_0125 IE3D080L04	34.2	12.71	559/44	26
125	1.7	216	1.4	56	K102_0115 IE3D080L04	26.7	11.57	266/23	26
125	3.0	217	2.5	56	K202_0115 IE3D080L04	34.2	11.55	1247/108	27
143	1.8	247	1.5	49	K102_0100 IE3D080L04	26.7	10.14	507/50	26
143	3.2	248	2.7	49	K202_0100 IE3D080L04	34.2	10.07	2881/286	27
156	1.9	271	1.6	45	K102_0092 IE3D080L04	26.7	9.249	1748/189	26
157	3.4	272	2.9	45	K202_0092 IE3D080L04	34.2	9.190	2279/248	27
172	3.7	298	3.1	41	K202_0084 IE3D080L04	34.2	8.397	2494/297	27
174	2.1	301	1.7	40	K102_0083 IE3D080L04	26.7	8.309	1911/230	26
216	4.3	375	3.6	32	K202_0067 IE3D080L04	34.2	6.683	2279/341	27
217	2.4	377	2.0	32	K102_0066 IE3D080L04	26.7	6.644	299/45	26
241	2.6	417	2.2	29	K102_0060 IE3D080L04	26.7	6.000	6/1	26
260	2.7	450	2.3	27	K102_0056 IE3D080L04	26.7	5.568	1520/273	27
331	4.8	574	4.8	21	K202_0044 IE3D080L04	34.2	4.364	48/11	28
361	3.4	626	2.8	19	K102_0040 IE3D080L04	26.7	4.000	4/1	27
429	6.9	–	–	16	K202_0067 IE3D080K02	28.7	6.683	2279/341	8.3
432	3.9	–	–	16	K102_0066 IE3D080K02	21.2	6.644	299/45	7.6
478	4.1	–	–	15	K102_0060 IE3D080K02	21.2	6.000	6/1	7.7
515	4.3	–	–	14	K102_0056 IE3D080K02	21.2	5.568	1520/273	7.9
658	9.1	–	–	11	K202_0044 IE3D080K02	28.7	4.364	48/11	9.3
718	5.4	–	–	9.7	K102_0040 IE3D080K02	21.2	4.000	4/1	8.1
P_N (50 Hz) = 1,10 kW, P_N (87 Hz) = 1,91 kW									
4.7	1.1	8.2	1.0	2094	K714_3050 IE3D090S04	122.2	304.8	195083/640	40
5.2	1.1	9.1	1.0	1891	K714_2750 IE3D090S04	122.2	275.3	44051/160	40
5.7	1.3	9.9	1.2	1722	K714_2510 IE3D090S04	122.2	250.7	320943/1280	40
5.8	0.86	10	0.86	1692	K614_2460 IE3D090S04	89.4	246.3	1261297/5120	40
6.4	1.3	11	1.2	1556	K714_2260 IE3D090S04	122.2	226.5	72471/320	40
6.5	0.95	11	0.95	1528	K614_2230 IE3D090S04	89.4	222.5	284809/1280	40
7.5	1.5	13	1.5	1325	K714_1930 IE3D090S04	122.2	192.9	320943/1664	40

n_2 50 Hz [rpm]	S 50 Hz	n_2 87 Hz [rpm]	S 87 Hz	M_{2N} [Nm]	Type	m [kg]	i	i_{exakt}	J_1 [10^{-4}kgm²]
P_N (50 Hz) = 1,10 kW, P_N (87 Hz) = 1,91 kW									
7.8	1.1	14	1.1	1268	K614_1850 IE3D090S04	89.4	184.6	383873/2080	40
8.3	1.5	14	1.5	1197	K714_1740 IE3D090S04	122.2	174.2	72471/416	40
8.6	1.3	15	1.3	1145	K614_1670 IE3D090S04	89.4	166.7	86681/520	40
9.5	1.7	16	1.7	1042	K714_1520 IE3D090S04	122.2	151.7	24273/160	41
9.7	0.88	17	0.88	1023	K514_1490 IE3D090S04	68.5	149.0	26071/175	40
9.7	1.4	17	1.4	1018	K614_1480 IE3D090S04	89.4	148.2	4551637/30720	40
11	1.7	18	1.7	941	K714_1370 IE3D090S04	122.2	137.0	5481/40	41
11	0.97	19	0.97	924	K514_1350 IE3D090S04	68.5	134.6	3364/25	40
11	1.6	19	1.6	919	K614_1340 IE3D090S04	89.4	133.8	1027789/7680	40
12	1.0	20	1.0	858	K514_1250 IE3D090S04	68.5	124.9	599633/4800	40
12	1.7	20	1.7	846	K614_1230 IE3D090S04	89.4	123.2	1261297/10240	40
13	1.2	22	1.2	775	K514_1130 IE3D090S04	68.5	112.8	135401/1200	40
13	1.9	22	1.9	764	K614_1110 IE3D090S04	89.4	111.3	284809/2560	40
15	1.1	26	1.1	674	K513_0970 IE3D090S04	64.0	96.64	38657/400	40
15	1.6	26	1.6	666	K613_0950 IE3D090S04	85.5	95.41	293105/3072	41
15	1.4	26	1.4	647	K514_0940 IE3D090S04	68.5	94.15	338923/3600	40
16	0.88	28	0.88	629	K403_0900 IE3D090S04	62.4	90.06	16211/180	40
16	1.1	29	1.1	609	K513_0870 IE3D090S04	64.0	87.29	8729/100	40
17	1.6	29	1.6	601	K613_0860 IE3D090S04	85.5	86.18	66185/768	41
17	1.5	29	1.5	584	K514_0850 IE3D090S04	68.5	85.03	76531/900	40
18	1.0	32	1.0	545	K403_0780 IE3D090S04	62.4	78.10	38657/495	40
19	1.7	32	1.7	541	K513_0780 IE3D090S04	64.0	77.59	26071/336	40
19	2.3	33	2.3	531	K613_0760 IE3D090S04	85.5	76.14	126697/1664	41
21	1.7	36	1.7	489	K513_0700 IE3D090S04	64.0	70.08	841/12	40
21	2.3	36	2.3	480	K613_0690 IE3D090S04	85.5	68.77	28609/416	41
21	1.2	37	1.2	470	K403_0670 IE3D090S04	62.4	67.30	21199/315	40
22	1.2	38	1.2	457	K403_0650 IE3D090S04	62.4	65.50	32422/495	40
22	2.0	39	2.0	450	K513_0650 IE3D090S04	64.0	64.54	12586/195	41
25	2.2	43	2.2	407	K513_0580 IE3D090S04	64.0	58.30	11368/195	41
26	1.1	45	1.1	394	K402_0560 IE3D090S04	58.2	55.71	2451/44	40
27	0.93	46	0.93	376	K303_0540 IE3D090S04	49.6	53.88	8729/162	40
27	1.5	46	1.5	375	K403_0540 IE3D090S04	62.4	53.69	38657/720	40
30	1.0	51	1.0	339	K303_0490 IE3D090S04	49.6	48.63	184556/3795	40
29	1.6	51	1.6	342	K403_0490 IE3D090S04	62.4	48.94	169592/3465	40
30	2.6	52	2.6	336	K513_0480 IE3D090S04	64.0	48.16	2697/56	41
31	1.1	54	1.1	327	K302_0460 IE3D090S04	44.7	46.23	1849/40	40
31	1.6	54	1.6	328	K402_0460 IE3D090S04	58.2	46.31	602/13	40
32	1.1	56	1.1	313	K303_0450 IE3D090S04	49.6	44.89	11223/250	40
32	1.8	56	1.8	311	K403_0450 IE3D090S04	62.4	44.54	1247/28	40
33	2.6	57	2.6	304	K513_0440 IE3D090S04	64.0	43.50	87/2	41
36	1.1	62	1.1	287	K402_0410 IE3D090S04	58.2	40.51	4902/121	40
37	1.3	64	1.3	273	K303_0390 IE3D090S04	49.6	39.19	34916/891	40
37	2.0	64	2.0	273	K403_0390 IE3D090S04	62.4	39.05	38657/990	40
40	1.4	70	1.4	250	K303_0360 IE3D090S04	49.6	35.83	215/6	40
40	2.0	70	2.0	249	K403_0360 IE3D090S04	62.4	35.72	13717/384	40
42	0.82	72	0.82	245	K202_0350 IE3D090S04	39.7	34.55	1935/56	40
41	1.4	72	1.4	246	K302_0350 IE3D090S04	44.7	34.73	903/26	40
41	2.2	72	2.2	246	K402_0350 IE3D090S04	58.2	34.76	4171/120	40
43	1.1	74	1.1	238	K302_0340 IE3D090S04	44.7	33.62	1849/55	40
43	1.6	74	1.6	238	K402_0340 IE3D090S04	58.2	33.68	4816/143	40
44	1.5	76	1.5	228	K303_0330 IE3D090S04	49.6	32.65	44892/1375	40
44	2.0	77	2.0	226	K403_0320 IE3D090S04	62.4	32.39	2494/77	40
52	1.0	89	0.95	198	K202_0280 IE3D090S04	39.7	27.95	559/20	40
52	1.8	89	1.7	197	K302_0280 IE3D090S04	44.7	27.88	3569/128	40
52	2.8	90	2.5	197	K402_0280 IE3D090S04	58.2	27.77	1333/48	41
57	1.1	99	1.0	178	K202_0250 IE3D090S04	39.7	25.13	1935/77	40
57	1.9	99	1.8	179	K302_0250 IE3D090S04	44.7	25.26	3612/143	40
57	2.6	99	2.6	179	K402_0250 IE3D090S04	58.2	25.28	4171/165	41
62	1.2	108	1.1	164	K202_0230 IE3D090S04	39.7	23.18	2967/128	40
62	2.1	107	1.9	165	K302_0230 IE3D090S04	44.7	23.29	559/24	40
71	1.4	123	1.2	144	K202_0200 IE3D090S04	39.7	20.33	1118/55	40
71	2.4	123	2.1	144	K302_0200 IE3D090S04	44.7	20.28	3569/176	40
82	0.86	–	–	124	K102_0175 IE3D090S04	32.2	17.56	2090/119	40
82	1.5	143	1.3	124	K202_0175 IE3D090S04	39.7	17.47	559/32	40
83	2.7	144	2.3	122	K302_0175 IE3D090S04	44.7	17.29	1591/92	41

n_2 50 Hz [rpm]	S 50 Hz	n_2 87 Hz [rpm]	S 87 Hz	M_{2N} [Nm]	Type	m [kg]	i	i_{exakt}	J_1 [10^{-4}kgm²]
P_N (50 Hz) = 1,10 kW, P_N (87 Hz) = 1,91 kW									
85	1.6	148	1.3	119	K202_0170 IE3D090S04	39.7	16.86	2967/176	40
85	2.7	147	2.3	120	K302_0170 IE3D090S04	44.7	16.94	559/33	41
86	0.89	–	–	118	K102_0165 IE3D090S04	32.2	16.71	117/7	40
102	0.99	177	0.84	100	K102_0140 IE3D090S04	32.2	14.11	494/35	40
104	1.8	180	1.5	98	K202_0140 IE3D090S04	39.7	13.85	2881/208	41
103	3.1	179	2.6	99	K302_0140 IE3D090S04	44.7	13.94	1505/108	41
114	1.1	198	0.90	89	K102_0125 IE3D090S04	32.2	12.62	429/34	40
113	1.9	196	1.6	90	K202_0125 IE3D090S04	39.7	12.71	559/44	40
114	3.3	198	2.8	89	K302_0125 IE3D090S04	44.7	12.58	3182/253	41
125	1.1	216	0.96	82	K102_0115 IE3D090S04	32.2	11.57	266/23	40
125	2.0	216	1.7	82	K202_0115 IE3D090S04	39.7	11.55	1247/108	41
142	1.2	246	1.0	72	K102_0100 IE3D090S04	32.2	10.14	507/50	40
143	2.2	248	1.9	71	K202_0100 IE3D090S04	39.7	10.07	2881/286	41
156	1.3	270	1.1	65	K102_0092 IE3D090S04	32.2	9.249	1748/189	40
157	2.4	271	2.0	65	K202_0092 IE3D090S04	39.7	9.190	2279/248	41
171	2.5	297	2.1	59	K202_0084 IE3D090S04	39.7	8.397	2494/297	41
173	1.4	300	1.2	59	K102_0083 IE3D090S04	32.2	8.309	1911/230	40
215	2.9	373	2.5	47	K202_0067 IE3D090S04	39.7	6.683	2279/341	41
217	1.6	375	1.4	47	K102_0066 IE3D090S04	32.2	6.644	299/45	40
240	1.8	416	1.5	42	K102_0060 IE3D090S04	32.2	6.000	6/1	40
240	3.1	416	2.6	42	K202_0060 IE3D090S04	39.7	6.000	6/1	42
259	1.8	448	1.6	39	K102_0056 IE3D090S04	32.2	5.568	1520/273	41
330	3.3	572	3.3	31	K202_0044 IE3D090S04	39.7	4.364	48/11	42
360	2.3	624	1.9	28	K102_0040 IE3D090S04	32.2	4.000	4/1	41
432	4.8	–	–	23	K202_0067 IE3D080LX02	35.2	6.683	2279/341	18
434	2.7	–	–	23	K102_0066 IE3D080LX02	27.7	6.644	299/45	17
481	2.9	–	–	21	K102_0060 IE3D080LX02	27.7	6.000	6/1	17
518	3.0	–	–	19	K102_0056 IE3D080LX02	27.7	5.568	1520/273	18
661	6.3	–	–	15	K202_0044 IE3D080LX02	35.2	4.364	48/11	19
721	3.8	–	–	14	K102_0040 IE3D080LX02	27.7	4.000	4/1	18
P_N (50 Hz) = 1,50 kW, P_N (87 Hz) = 2,60 kW									
4.8	0.85	–	–	2811	K714_3050 IE3D090LX04	130.7	304.8	195083/640	58
5.3	0.86	–	–	2539	K714_2750 IE3D090LX04	130.7	275.3	44051/160	58
5.8	0.98	10	0.91	2312	K714_2510 IE3D090LX04	130.7	250.7	320943/1280	58
6.4	0.98	11	0.91	2088	K714_2260 IE3D090LX04	130.7	226.5	72471/320	58
7.5	1.1	13	1.1	1779	K714_1930 IE3D090LX04	130.7	192.9	320943/1664	58
7.9	0.85	14	0.85	1702	K614_1850 IE3D090LX04	97.9	184.6	383873/2080	58
8.4	1.1	14	1.1	1607	K714_1740 IE3D090LX04	130.7	174.2	72471/416	58
8.7	0.94	15	0.94	1537	K614_1670 IE3D090LX04	97.9	166.7	86681/520	58
9.6	1.3	17	1.3	1399	K714_1520 IE3D090LX04	130.7	151.7	24273/160	59
9.8	1.1	17	1.1	1366	K614_1480 IE3D090LX04	97.9	148.2	4551637/30720	58
11	1.3	18	1.3	1264	K714_1370 IE3D090LX04	130.7	137.0	5481/40	59
11	1.2	19	1.2	1234	K614_1340 IE3D090LX04	97.9	133.8	1027789/7680	58
12	1.3	20	1.3	1136	K614_1230 IE3D090LX04	97.9	123.2	1261297/10240	58
13	0.87	22	0.87	1041	K514_1130 IE3D090LX04	77.0	112.8	135401/1200	58
13	1.4	23	1.4	1026	K614_1110 IE3D090LX04	97.9	111.3	284809/2560	58
15	0.84	26	0.84	905	K513_0970 IE3D090LX04	72.5	96.64	38657/400	58
15	1.2	26	1.2	894	K613_0950 IE3D090LX04	94.0	95.41	293105/3072	59
15	1.0	27	1.0	868	K514_0940 IE3D090LX04	77.0	94.15	338923/3600	58
17	0.84	29	0.84	818	K513_0870 IE3D090LX04	72.5	87.29	8729/100	58
17	1.2	29	1.2	807	K613_0860 IE3D090LX04	94.0	86.18	66185/768	59
17	1.1	30	1.1	784	K514_0850 IE3D090LX04	77.0	85.03	76531/900	58
19	1.2	32	1.2	727	K513_0780 IE3D090LX04	72.5	77.59	26071/336	58
19	1.7	33	1.7	713	K613_0760 IE3D090LX04	94.0	76.14	126697/1664	59
21	1.3	36	1.3	657	K513_0700 IE3D090LX04	72.5	70.08	841/12	58
21	1.7	37	1.7	644	K613_0690 IE3D090LX04	94.0	68.77	28609/416	59
22	0.87	37	0.87	631	K403_0670 IE3D090LX04	70.9	67.30	21199/315	58
22	0.90	38	0.90	614	K403_0650 IE3D090LX04	70.9	65.50	32422/495	58
23	1.5	39	1.5	605	K513_0650 IE3D090LX04	72.5	64.54	12586/195	59
25	1.6	43	1.6	546	K513_0580 IE3D090LX04	72.5	58.30	11368/195	59
26	0.80	45	0.80	530	K402_0560 IE3D090LX04	66.7	55.71	2451/44	58
27	1.1	47	1.1	503	K403_0540 IE3D090LX04	70.9	53.69	38657/720	58
30	1.2	51	1.2	459	K403_0490 IE3D090LX04	70.9	48.94	169592/3465	58
30	1.9	52	1.9	451	K513_0480 IE3D090LX04	72.5	48.16	2697/56	59
31	1.2	54	1.2	440	K402_0460 IE3D090LX04	66.7	46.31	602/13	58

n_2 50 Hz [rpm]	S 50 Hz	n_2 87 Hz [rpm]	S 87 Hz	M_{2N} [Nm]	Type	m [kg]	i	i_{exakt}	J_1 [10^{-4}kgm²]
P_N (50 Hz) = 1,50 kW, P_N (87 Hz) = 2,60 kW									
32	0.83	56	0.83	421	K303_0450 IE3D090LX04	58.1	44.89	11223/250	58
33	1.3	57	1.3	417	K403_0450 IE3D090LX04	70.9	44.54	1247/28	58
33	1.9	58	1.9	408	K513_0440 IE3D090LX04	72.5	43.50	87/2	59
36	0.80	62	0.80	385	K402_0410 IE3D090LX04	66.7	40.51	4902/121	58
37	0.95	64	0.95	367	K303_0390 IE3D090LX04	58.1	39.19	34916/891	58
37	1.5	65	1.5	366	K403_0390 IE3D090LX04	70.9	39.05	38657/990	58
41	1.0	70	1.0	336	K303_0360 IE3D090LX04	58.1	35.83	215/6	58
41	1.5	71	1.5	335	K403_0360 IE3D090LX04	70.9	35.72	13717/384	58
42	1.1	73	1.1	330	K302_0350 IE3D090LX04	53.2	34.73	903/26	58
42	1.7	73	1.6	330	K402_0350 IE3D090LX04	66.7	34.76	4171/120	58
43	1.2	75	1.2	320	K402_0340 IE3D090LX04	66.7	33.68	4816/143	58
45	1.1	77	1.1	306	K303_0330 IE3D090LX04	58.1	32.65	44892/1375	58
45	1.5	78	1.5	303	K403_0320 IE3D090LX04	70.9	32.39	2494/77	58
52	1.3	90	1.2	265	K302_0280 IE3D090LX04	53.2	27.88	3569/128	58
52	2.1	91	1.9	264	K402_0280 IE3D090LX04	66.7	27.77	1333/48	59
58	0.84	–	–	239	K202_0250 IE3D090LX04	48.2	25.13	1935/77	58
58	1.4	100	1.3	240	K302_0250 IE3D090LX04	53.2	25.26	3612/143	58
58	2.0	100	2.0	240	K402_0250 IE3D090LX04	66.7	25.28	4171/165	59
63	0.91	–	–	220	K202_0230 IE3D090LX04	48.2	23.18	2967/128	58
62	1.6	108	1.4	221	K302_0230 IE3D090LX04	53.2	23.29	559/24	58
62	2.4	108	2.1	221	K402_0230 IE3D090LX04	66.7	23.29	559/24	59
72	1.0	124	0.87	193	K202_0200 IE3D090LX04	48.2	20.33	1118/55	58
72	1.8	124	1.5	193	K302_0200 IE3D090LX04	53.2	20.28	3569/176	58
72	2.3	125	2.3	192	K402_0200 IE3D090LX04	66.7	20.20	1333/66	59
83	1.1	144	0.96	166	K202_0175 IE3D090LX04	48.2	17.47	559/32	58
84	2.0	146	1.7	164	K302_0175 IE3D090LX04	53.2	17.29	1591/92	59
86	1.2	149	0.99	160	K202_0170 IE3D090LX04	48.2	16.86	2967/176	58
86	2.0	149	1.7	161	K302_0170 IE3D090LX04	53.2	16.94	559/33	59
105	1.3	182	1.1	132	K202_0140 IE3D090LX04	48.2	13.85	2881/208	59
104	2.3	181	2.0	132	K302_0140 IE3D090LX04	53.2	13.94	1505/108	59
115	1.4	198	1.2	121	K202_0125 IE3D090LX04	48.2	12.71	559/44	58
116	2.4	200	2.1	120	K302_0125 IE3D090LX04	53.2	12.58	3182/253	59
126	0.84	–	–	110	K102_0115 IE3D090LX04	40.7	11.57	266/23	58
126	1.5	218	1.3	110	K202_0115 IE3D090LX04	48.2	11.55	1247/108	59
125	2.4	217	2.2	110	K302_0115 IE3D090LX04	53.2	11.61	1161/100	59
143	0.92	–	–	96	K102_0100 IE3D090LX04	40.7	10.14	507/50	58
144	1.7	250	1.4	96	K202_0100 IE3D090LX04	48.2	10.07	2881/286	59
144	2.4	249	2.4	96	K302_0100 IE3D090LX04	53.2	10.14	3010/297	59
157	0.98	272	0.82	88	K102_0092 IE3D090LX04	40.7	9.249	1748/189	58
158	1.8	274	1.5	87	K202_0092 IE3D090LX04	48.2	9.190	2279/248	59
173	1.9	300	1.6	80	K202_0084 IE3D090LX04	48.2	8.397	2494/297	59
172	2.4	298	2.4	80	K302_0084 IE3D090LX04	53.2	8.444	2322/275	60
175	1.1	303	0.89	79	K102_0083 IE3D090LX04	40.7	8.309	1911/230	58
218	2.2	377	1.8	64	K202_0067 IE3D090LX04	48.2	6.683	2279/341	59
219	1.2	379	1.0	63	K102_0066 IE3D090LX04	40.7	6.644	299/45	58
243	1.3	420	1.1	57	K102_0060 IE3D090LX04	40.7	6.000	6/1	58
243	2.3	420	2.0	57	K202_0060 IE3D090LX04	48.2	6.000	6/1	60
261	1.4	453	1.2	53	K102_0056 IE3D090LX04	40.7	5.568	1520/273	59
333	2.4	577	2.4	41	K202_0044 IE3D090LX04	48.2	4.364	48/11	60
364	1.7	630	1.4	38	K102_0040 IE3D090LX04	40.7	4.000	4/1	59
364	2.4	630	2.4	38	K202_0040 IE3D090LX04	48.2	4.000	4/1	60
434	3.5	–	–	32	K202_0067 IE3D090S02	36.2	6.683	2279/341	18
436	2.0	–	–	32	K102_0066 IE3D090S02	28.7	6.644	299/45	17
483	2.1	–	–	29	K102_0060 IE3D090S02	28.7	6.000	6/1	17
521	2.2	–	–	26	K102_0056 IE3D090S02	28.7	5.568	1520/273	18
665	4.6	–	–	21	K202_0044 IE3D090S02	36.2	4.364	48/11	19
725	2.8	–	–	19	K102_0040 IE3D090S02	28.7	4.000	4/1	18
P_N (50 Hz) = 2,20 kW, P_N (87 Hz) = 3,81 kW									
3.9	1.1	6.7	0.98	5099	K914_3740 IE3D100KX04	317.0	373.7	13775935/36864	111
4.7	0.94	8.1	0.94	4242	K814_3110 IE3D100KX04	202.8	310.9	2149075/6912	111
4.9	1.4	8.5	1.2	4008	K914_2940 IE3D100KX04	317.0	293.8	977647/3328	111
5.2	0.94	8.9	0.94	3832	K814_2810 IE3D100KX04	202.8	280.8	485275/1728	111
5.7	1.2	9.8	1.1	3496	K814_2560 IE3D100KX04	202.8	256.2	8854189/34560	111
5.9	1.6	10	1.4	3371	K914_2470 IE3D100KX04	317.0	247.0	3288449/13312	111
6.3	1.3	11	1.1	3157	K814_2310 IE3D100KX04	202.8	231.4	1999333/8640	111

n_2 50 Hz [rpm]	S 50 Hz	n_2 87 Hz [rpm]	S 87 Hz	M_{2N} [Nm]	Type	m [kg]	i	i_{exakt}	J_1 [10^{-4}kgm²]
P_N (50 Hz) = 2,20 kW, P_N (87 Hz) = 3,81 kW									
7.4	0.90	13	0.90	2666	K714_1950 IE3D100KX04	144.7	195.4	2600745/13312	111
7.6	1.6	13	1.4	2618	K814_1920 IE3D100KX04	202.8	191.9	85963/448	111
7.6	1.9	13	1.7	2615	K914_1920 IE3D100KX04	317.0	191.7	4710481/24576	112
8.2	1.0	14	1.0	2408	K714_1760 IE3D100KX04	144.7	176.5	587265/3328	111
8.4	1.7	14	1.4	2365	K814_1730 IE3D100KX04	202.8	173.3	2773/16	111
9.3	2.0	16	1.7	2138	K814_1570 IE3D100KX04	202.8	156.7	601741/3840	111
9.4	1.1	16	1.1	2097	K714_1540 IE3D100KX04	144.7	153.7	39339/256	111
9.7	2.2	17	2.0	2033	K914_1490 IE3D100KX04	317.0	149.0	9154331/61440	112
10	2.0	18	1.7	1931	K814_1420 IE3D100KX04	202.8	141.5	135877/960	111
10	1.3	18	1.3	1894	K714_1390 IE3D100KX04	144.7	138.8	8883/64	111
11	1.4	20	1.4	1733	K714_1270 IE3D100KX04	144.7	127.0	520149/4096	111
11	2.2	20	2.0	1731	K814_1270 IE3D100KX04	202.8	126.9	1461371/11520	112
12	2.2	20	2.2	1716	K914_1260 IE3D100KX04	317.0	125.8	2221925/17664	113
13	1.5	22	1.5	1565	K714_1150 IE3D100KX04	144.7	114.7	117453/1024	111
13	2.2	22	2.0	1563	K814_1150 IE3D100KX04	202.8	114.6	329987/2880	112
15	1.4	25	1.4	1366	K713_0990 IE3D100KX04	136.3	98.54	100905/1024	111
15	1.8	25	1.8	1345	K714_0990 IE3D100KX04	144.7	98.60	1009701/10240	111
15	2.2	26	2.2	1347	K813_0970 IE3D100KX04	189.7	97.17	31093/320	113
15	2.2	27	2.2	1280	K914_0940 IE3D100KX04	317.0	93.78	4177219/44544	114
16	1.4	28	1.4	1234	K713_0890 IE3D100KX04	136.3	89.00	22785/256	111
16	2.0	28	2.0	1215	K714_0890 IE3D100KX04	144.7	89.06	227997/2560	111
17	2.2	29	2.2	1217	K813_0880 IE3D100KX04	189.7	87.76	7021/80	113
18	2.2	32	2.2	1093	K713_0790 IE3D100KX04	136.3	78.83	20181/256	112
19	1.4	33	1.4	1055	K613_0760 IE3D100KX04	108.0	76.14	126697/1664	111
20	2.4	35	2.4	994	K813_0720 IE3D100KX04	189.7	71.70	10325/144	114
20	2.2	35	2.2	987	K713_0710 IE3D100KX04	136.3	71.20	4557/64	112
21	1.4	37	1.4	953	K613_0690 IE3D100KX04	108.0	68.77	28609/416	111
22	1.0	39	1.0	895	K513_0650 IE3D100KX04	86.5	64.54	12586/195	111
22	2.5	39	2.5	899	K713_0650 IE3D100KX04	136.3	64.85	33201/512	112
23	1.6	39	1.6	883	K613_0640 IE3D100KX04	108.0	63.71	130479/2048	111
25	2.5	43	2.5	812	K713_0590 IE3D100KX04	136.3	58.57	7497/128	113
25	1.1	43	1.1	808	K513_0580 IE3D100KX04	86.5	58.30	11368/195	111
25	1.8	44	1.8	798	K613_0580 IE3D100KX04	108.0	57.55	29463/512	111
29	2.8	50	2.8	691	K713_0500 IE3D100KX04	136.3	49.88	166005/3328	114
30	3.2	51	3.2	679	K813_0490 IE3D100KX04	189.7	48.99	5487/112	119
30	1.3	52	1.3	668	K513_0480 IE3D100KX04	86.5	48.16	2697/56	111
30	2.2	53	2.2	662	K613_0480 IE3D100KX04	108.0	47.73	39711/832	112
32	2.8	56	2.8	625	K713_0450 IE3D100KX04	136.3	45.05	37485/832	114
33	1.5	58	1.5	603	K513_0440 IE3D100KX04	86.5	43.50	87/2	111
33	3.2	57	3.2	613	K813_0440 IE3D100KX04	189.7	44.25	177/4	119
34	2.4	58	2.3	598	K613_0430 IE3D100KX04	108.0	43.11	8967/208	112
38	1.7	65	1.7	534	K513_0390 IE3D100KX04	86.5	38.53	2697/70	111
37	3.3	64	3.3	544	K713_0390 IE3D100KX04	136.3	39.23	2511/64	116
38	2.7	66	2.5	531	K613_0380 IE3D100KX04	108.0	38.32	156953/4096	113
42	1.1	72	1.1	489	K402_0350 IE3D100KX04	80.7	34.76	4171/120	110
42	1.9	72	1.9	482	K513_0350 IE3D100KX04	86.5	34.80	174/5	112
42	3.0	73	2.7	480	K613_0350 IE3D100KX04	108.0	34.61	35441/1024	113
45	2.0	78	2.0	448	K513_0320 IE3D100KX04	86.5	32.31	20677/640	112
50	2.2	86	2.2	405	K513_0290 IE3D100KX04	86.5	29.18	4669/160	112
52	0.89	90	0.84	392	K302_0280 IE3D100KX04	67.2	27.88	3569/128	110
52	1.4	90	1.3	391	K402_0280 IE3D100KX04	80.7	27.77	1333/48	111
57	1.4	99	1.3	356	K402_0250 IE3D100KX04	80.7	25.28	4171/165	111
60	2.7	103	2.6	338	K513_0240 IE3D100KX04	86.5	24.35	11687/480	113
62	1.1	108	0.94	328	K302_0230 IE3D100KX04	67.2	23.29	559/24	110
62	1.7	108	1.4	328	K402_0230 IE3D100KX04	80.7	23.29	559/24	111
66	3.0	114	2.8	305	K513_0220 IE3D100KX04	86.5	21.99	2639/120	113
72	1.2	124	1.0	285	K302_0200 IE3D100KX04	67.2	20.28	3569/176	110
72	1.8	124	1.6	284	K402_0200 IE3D100KX04	80.7	20.20	1333/66	111
75	3.4	130	3.0	268	K513_0195 IE3D100KX04	86.5	19.35	27869/1440	114
76	4.1	132	4.0	263	K613_0190 IE3D100KX04	108.0	18.99	17019/896	118
84	1.4	145	1.1	243	K302_0175 IE3D100KX04	67.2	17.29	1591/92	111
83	2.0	144	1.7	245	K402_0175 IE3D100KX04	80.7	17.41	731/42	111
86	1.4	148	1.2	238	K302_0170 IE3D100KX04	67.2	16.94	559/33	111
86	2.1	148	1.7	238	K402_0170 IE3D100KX04	80.7	16.94	559/33	111
90	4.0	–	–	223	K513_0160 IE3D100KX04	86.5	16.09	26071/1620	115

n_2 50 Hz [rpm]	S 50 Hz	n_2 87 Hz [rpm]	S 87 Hz	M_{2N} [Nm]	Type	m [kg]	i	i_{exakt}	J_1 [10^{-4}kgm²]
P_N (50 Hz) = 2,20 kW, P_N (87 Hz) = 3,81 kW									
100	4.1	–	–	201	K513_0145 IE3D100KX04	86.5	14.54	5887/405	116
105	0.90	–	–	195	K202_0140 IE3D100KX04	62.2	13.85	2881/208	111
104	1.6	180	1.3	196	K302_0140 IE3D100KX04	67.2	13.94	1505/108	111
104	2.4	181	2.0	195	K402_0140 IE3D100KX04	80.7	13.89	1333/96	112
114	0.96	198	0.81	179	K202_0125 IE3D100KX04	62.2	12.71	559/44	110
115	1.7	200	1.4	177	K302_0125 IE3D100KX04	67.2	12.58	3182/253	111
115	2.5	198	2.1	178	K402_0125 IE3D100KX04	80.7	12.66	2924/231	112
126	1.0	218	0.86	162	K202_0115 IE3D100KX04	62.2	11.55	1247/108	111
125	1.8	216	1.5	163	K302_0115 IE3D100KX04	67.2	11.61	1161/100	111
126	2.7	218	2.3	162	K402_0115 IE3D100KX04	80.7	11.52	645/56	113
144	1.1	249	0.94	142	K202_0100 IE3D100KX04	62.2	10.07	2881/286	111
143	1.9	248	1.6	143	K302_0100 IE3D100KX04	67.2	10.14	3010/297	111
144	2.9	249	2.5	142	K402_0100 IE3D100KX04	80.7	10.10	1333/132	112
156	2.1	271	1.7	130	K302_0093 IE3D100KX04	67.2	9.267	1075/116	112
158	1.2	273	1.0	129	K202_0092 IE3D100KX04	62.2	9.190	2279/248	111
157	3.1	272	2.6	130	K402_0092 IE3D100KX04	80.7	9.238	2365/256	114
173	1.3	299	1.1	118	K202_0084 IE3D100KX04	62.2	8.397	2494/297	111
172	2.2	297	1.9	119	K302_0084 IE3D100KX04	67.2	8.444	2322/275	112
196	2.4	340	2.0	104	K302_0074 IE3D100KX04	67.2	7.391	473/64	113
204	1.4	353	1.2	100	K202_0071 IE3D100KX04	62.2	7.118	2107/296	111
217	1.5	376	1.2	94	K202_0067 IE3D100KX04	62.2	6.683	2279/341	111
215	2.6	373	2.2	95	K302_0067 IE3D100KX04	67.2	6.740	2150/319	112
242	1.6	419	1.3	84	K202_0060 IE3D100KX04	62.2	6.000	6/1	112
242	2.8	419	2.3	84	K302_0060 IE3D100KX04	67.2	6.000	6/1	113
270	3.0	467	2.5	76	K302_0054 IE3D100KX04	67.2	5.375	43/8	113
280	1.7	485	1.5	73	K202_0052 IE3D100KX04	62.2	5.177	2107/407	112
332	2.0	575	1.6	61	K202_0044 IE3D100KX04	62.2	4.364	48/11	112
332	3.4	575	2.9	61	K302_0044 IE3D100KX04	67.2	4.364	48/11	114
363	2.1	628	1.7	56	K202_0040 IE3D100KX04	62.2	4.000	4/1	112
431	2.3	–	–	47	K202_0067 IE3D090L02	40.7	6.683	2279/341	29
433	1.3	–	–	47	K102_0066 IE3D090L02	33.2	6.644	299/45	28
480	1.4	–	–	42	K102_0060 IE3D090L02	33.2	6.000	6/1	28
480	2.5	–	–	42	K202_0060 IE3D090L02	40.7	6.000	6/1	29
517	1.5	–	–	39	K102_0056 IE3D090L02	33.2	5.568	1520/273	28
660	3.1	–	–	31	K202_0044 IE3D090L02	40.7	4.364	48/11	30
720	1.9	–	–	28	K102_0040 IE3D090L02	33.2	4.000	4/1	28
720	3.3	–	–	28	K202_0040 IE3D090L02	40.7	4.000	4/1	30
P_N (50 Hz) = 3,00 kW, P_N (87 Hz) = 5,20 kW									
4.9	1.0	8.5	0.88	5473	K914_2940 IE3D100LX04	322.0	293.8	977647/3328	131
5.7	0.88	9.8	0.84	4773	K814_2560 IE3D100LX04	207.8	256.2	8854189/34560	131
5.9	1.2	10	1.0	4603	K914_2470 IE3D100LX04	322.0	247.0	3288449/13312	131
6.3	0.97	11	0.84	4311	K814_2310 IE3D100LX04	207.8	231.4	1999333/8640	131
7.6	1.2	13	1.1	3575	K814_1920 IE3D100LX04	207.8	191.9	85963/448	131
7.6	1.4	13	1.2	3571	K914_1920 IE3D100LX04	322.0	191.7	4710481/24576	132
8.4	1.3	14	1.1	3229	K814_1730 IE3D100LX04	207.8	173.3	2773/16	131
9.3	1.4	16	1.2	2920	K814_1570 IE3D100LX04	207.8	156.7	601741/3840	131
9.4	0.84	16	0.84	2863	K714_1540 IE3D100LX04	149.7	153.7	39339/256	131
9.7	1.6	17	1.5	2776	K914_1490 IE3D100LX04	322.0	149.0	9154331/61440	132
10	1.5	18	1.2	2637	K814_1420 IE3D100LX04	207.8	141.5	135877/960	131
10	0.93	18	0.93	2586	K714_1390 IE3D100LX04	149.7	138.8	8883/64	131
11	1.0	20	1.0	2366	K714_1270 IE3D100LX04	149.7	127.0	520149/4096	131
11	1.6	20	1.5	2364	K814_1270 IE3D100LX04	207.8	126.9	1461371/11520	132
12	1.6	20	1.6	2344	K914_1260 IE3D100LX04	322.0	125.8	2221925/17664	133
13	1.1	22	1.1	2137	K714_1150 IE3D100LX04	149.7	114.7	117453/1024	131
13	1.6	22	1.5	2135	K814_1150 IE3D100LX04	207.8	114.6	329987/2880	132
15	0.99	25	0.99	1865	K713_0990 IE3D100LX04	141.3	98.54	100905/1024	131
15	1.3	25	1.3	1837	K714_0990 IE3D100LX04	149.7	98.60	1009701/10240	131
15	1.6	26	1.6	1839	K813_0970 IE3D100LX04	194.7	97.17	31093/320	133
15	1.6	27	1.6	1747	K914_0940 IE3D100LX04	322.0	93.78	4177219/44544	134
16	0.99	28	0.99	1685	K713_0890 IE3D100LX04	141.3	89.00	22785/256	131
16	1.4	28	1.4	1659	K714_0890 IE3D100LX04	149.7	89.06	227997/2560	131
17	1.6	29	1.6	1661	K813_0880 IE3D100LX04	194.7	87.76	7021/80	133
18	1.6	32	1.6	1492	K713_0790 IE3D100LX04	141.3	78.83	20181/256	132
18	1.8	32	1.8	1503	K813_0790 IE3D100LX04	194.7	79.38	45725/576	134
19	1.0	33	1.0	1441	K613_0760 IE3D100LX04	113.0	76.14	126697/1664	131

n_2 50 Hz [rpm]	S 50 Hz	n_2 87 Hz [rpm]	S 87 Hz	M_{2N} [Nm]	Type	m [kg]	i	i_{exakt}	J_1 [10^{-4}kgm²]
P_N (50 Hz) = 3,00 kW, P_N (87 Hz) = 5,20 kW									
20	1.8	35	1.8	1357	K813_0720 IE3D100LX04	194.7	71.70	10325/144	134
20	1.6	35	1.6	1348	K713_0710 IE3D100LX04	141.3	71.20	4557/64	132
21	1.0	37	1.0	1302	K613_0690 IE3D100LX04	113.0	68.77	28609/416	131
22	1.8	39	1.8	1227	K713_0650 IE3D100LX04	141.3	64.85	33201/512	132
23	1.2	39	1.2	1206	K613_0640 IE3D100LX04	113.0	63.71	130479/2048	131
25	1.8	43	1.8	1109	K713_0590 IE3D100LX04	141.3	58.57	7497/128	133
25	0.82	43	0.82	1103	K513_0580 IE3D100LX04	91.5	58.30	11368/195	131
25	1.3	44	1.3	1089	K613_0580 IE3D100LX04	113.0	57.55	29463/512	131
29	2.1	50	2.1	944	K713_0500 IE3D100LX04	141.3	49.88	166005/3328	134
30	2.3	51	2.3	927	K813_0490 IE3D100LX04	194.7	48.99	5487/112	139
30	0.99	52	0.99	912	K513_0480 IE3D100LX04	91.5	48.16	2697/56	131
30	1.6	53	1.6	903	K613_0480 IE3D100LX04	113.0	47.73	39711/832	132
32	2.1	56	2.1	853	K713_0450 IE3D100LX04	141.3	45.05	37485/832	134
33	1.1	58	1.1	823	K513_0440 IE3D100LX04	91.5	43.50	87/2	131
33	2.3	57	2.3	838	K813_0440 IE3D100LX04	194.7	44.25	177/4	139
34	1.8	58	1.7	816	K613_0430 IE3D100LX04	113.0	43.11	8967/208	132
38	1.2	65	1.2	729	K513_0390 IE3D100LX04	91.5	38.53	2697/70	131
37	2.4	64	2.4	743	K713_0390 IE3D100LX04	141.3	39.23	2511/64	136
38	2.0	66	1.8	725	K613_0380 IE3D100LX04	113.0	38.32	156953/4096	133
42	0.82	–	–	668	K402_0350 IE3D100LX04	85.7	34.76	4171/120	130
42	1.4	72	1.4	659	K513_0350 IE3D100LX04	91.5	34.80	174/5	132
42	2.2	73	2.0	655	K613_0350 IE3D100LX04	113.0	34.61	35441/1024	133
45	1.5	78	1.5	612	K513_0320 IE3D100LX04	91.5	32.31	20677/640	132
46	2.4	79	2.1	603	K613_0320 IE3D100LX04	113.0	31.86	130479/4096	134
50	1.6	86	1.6	552	K513_0290 IE3D100LX04	91.5	29.18	4669/160	132
50	2.7	87	2.2	545	K613_0290 IE3D100LX04	113.0	28.77	29463/1024	134
52	1.0	90	0.92	533	K402_0280 IE3D100LX04	85.7	27.77	1333/48	131
57	1.0	99	0.98	486	K402_0250 IE3D100LX04	85.7	25.28	4171/165	131
60	2.0	103	1.9	461	K513_0240 IE3D100LX04	91.5	24.35	11687/480	133
62	1.2	108	1.0	447	K402_0230 IE3D100LX04	85.7	23.29	559/24	131
66	2.2	114	2.0	416	K513_0220 IE3D100LX04	91.5	21.99	2639/120	133
72	0.90	–	–	389	K302_0200 IE3D100LX04	72.2	20.28	3569/176	130
72	1.4	124	1.1	388	K402_0200 IE3D100LX04	85.7	20.20	1333/66	131
75	2.5	130	2.2	366	K513_0195 IE3D100LX04	91.5	19.35	27869/1440	134
76	3.0	132	3.0	360	K613_0190 IE3D100LX04	113.0	18.99	17019/896	138
84	1.0	145	0.84	332	K302_0175 IE3D100LX04	72.2	17.29	1591/92	131
83	1.5	144	1.3	334	K402_0175 IE3D100LX04	85.7	17.41	731/42	131
83	2.7	144	2.4	331	K513_0175 IE3D100LX04	91.5	17.48	6293/360	134
86	1.0	148	0.85	325	K302_0170 IE3D100LX04	72.2	16.94	559/33	131
86	1.5	148	1.3	325	K402_0170 IE3D100LX04	85.7	16.94	559/33	131
85	3.0	146	3.0	325	K613_0170 IE3D100LX04	113.0	17.16	549/32	138
90	3.0	–	–	305	K513_0160 IE3D100LX04	91.5	16.09	26071/1620	135
100	3.0	–	–	275	K513_0145 IE3D100LX04	91.5	14.54	5887/405	136
104	1.2	180	0.97	268	K302_0140 IE3D100LX04	72.2	13.94	1505/108	131
104	1.7	181	1.5	267	K402_0140 IE3D100LX04	85.7	13.89	1333/96	132
115	1.2	200	1.0	242	K302_0125 IE3D100LX04	72.2	12.58	3182/253	131
115	1.8	198	1.6	243	K402_0125 IE3D100LX04	85.7	12.66	2924/231	132
125	1.3	216	1.1	223	K302_0115 IE3D100LX04	72.2	11.61	1161/100	131
126	2.0	218	1.7	221	K402_0115 IE3D100LX04	85.7	11.52	645/56	133
144	0.82	–	–	193	K202_0100 IE3D100LX04	67.2	10.07	2881/286	131
143	1.4	248	1.2	195	K302_0100 IE3D100LX04	72.2	10.14	3010/297	131
144	2.1	249	1.8	194	K402_0100 IE3D100LX04	85.7	10.10	1333/132	132
156	1.5	271	1.3	178	K302_0093 IE3D100LX04	72.2	9.267	1075/116	132
158	0.87	–	–	177	K202_0092 IE3D100LX04	67.2	9.190	2279/248	131
157	2.3	272	1.9	177	K402_0092 IE3D100LX04	85.7	9.238	2365/256	134
173	0.92	–	–	161	K202_0084 IE3D100LX04	67.2	8.397	2494/297	131
172	1.6	297	1.4	162	K302_0084 IE3D100LX04	72.2	8.444	2322/275	132
173	2.4	300	2.0	161	K402_0084 IE3D100LX04	85.7	8.377	645/77	133
196	1.8	340	1.5	142	K302_0074 IE3D100LX04	72.2	7.391	473/64	133
204	1.0	353	0.87	137	K202_0071 IE3D100LX04	67.2	7.118	2107/296	131
217	1.1	376	0.91	128	K202_0067 IE3D100LX04	67.2	6.683	2279/341	131
215	1.9	373	1.6	129	K302_0067 IE3D100LX04	72.2	6.740	2150/319	132
216	2.8	374	2.4	129	K402_0067 IE3D100LX04	85.7	6.719	215/32	134
242	1.2	419	0.97	115	K202_0060 IE3D100LX04	67.2	6.000	6/1	132
242	2.0	419	1.7	115	K302_0060 IE3D100LX04	72.2	6.000	6/1	133

n_2 50 Hz [rpm]	S 50 Hz	n_2 87 Hz [rpm]	S 87 Hz	M_{2N} [Nm]	Type	m [kg]	i	i_{exakt}	J_1 [10^{-4}kgm²]
P_N (50 Hz) = 3,00 kW, P_N (87 Hz) = 5,20 kW									
270	2.2	467	1.8	103	K302_0054 IE3D100LX04	72.2	5.375	43/8	133
280	1.3	485	1.1	99	K202_0052 IE3D100LX04	67.2	5.177	2107/407	132
332	1.4	575	1.2	84	K202_0044 IE3D100LX04	67.2	4.364	48/11	132
332	2.5	575	2.1	84	K302_0044 IE3D100LX04	72.2	4.364	48/11	134
363	1.5	628	1.3	77	K202_0040 IE3D100LX04	67.2	4.000	4/1	132
363	2.7	628	2.2	77	K302_0040 IE3D100LX04	72.2	4.000	4/1	135
410	1.7	–	–	68	K202_0071 IE3D100L02	48.2	7.118	2107/296	46
437	1.7	–	–	64	K202_0067 IE3D100L02	48.2	6.683	2279/341	46
433	3.0	–	–	64	K302_0067 IE3D100L02	53.2	6.740	2150/319	47
487	1.9	–	–	57	K202_0060 IE3D100L02	48.2	6.000	6/1	47
564	2.1	–	–	49	K202_0052 IE3D100L02	48.2	5.177	2107/407	47
669	2.3	–	–	41	K202_0044 IE3D100L02	48.2	4.364	48/11	47
730	2.5	–	–	38	K202_0040 IE3D100L02	48.2	4.000	4/1	47
P_N (50 Hz) = 4,00 kW, P_N (87 Hz) = 6,93 kW									
5.9	0.90	–	–	6067	K914_2470 IE3D112M04	328.0	247.0	3288449/13312	171
7.6	0.89	13	0.80	4713	K814_1920 IE3D112M04	213.8	191.9	85963/448	171
7.6	1.1	13	0.93	4707	K914_1920 IE3D112M04	328.0	191.7	4710481/24576	172
8.5	0.95	15	0.80	4257	K814_1730 IE3D112M04	213.8	173.3	2773/16	171
9.3	1.1	16	0.93	3849	K814_1570 IE3D112M04	213.8	156.7	601741/3840	171
9.8	1.2	17	1.1	3659	K914_1490 IE3D112M04	328.0	149.0	9154331/61440	172
10	1.1	18	0.93	3476	K814_1420 IE3D112M04	213.8	141.5	135877/960	171
12	1.2	20	1.1	3116	K814_1270 IE3D112M04	213.8	126.9	1461371/11520	172
12	1.2	20	1.2	3089	K914_1260 IE3D112M04	328.0	125.8	2221925/17664	173
13	0.85	22	0.85	2817	K714_1150 IE3D112M04	155.7	114.7	117453/1024	171
13	1.2	22	1.1	2814	K814_1150 IE3D112M04	213.8	114.6	329987/2880	172
15	0.99	26	0.99	2422	K714_0990 IE3D112M04	155.7	98.60	1009701/10240	171
15	1.2	26	1.2	2424	K813_0970 IE3D112M04	200.7	97.17	31093/320	173
16	1.2	27	1.2	2303	K914_0940 IE3D112M04	328.0	93.78	4177219/44544	174
16	1.1	28	1.1	2187	K714_0890 IE3D112M04	155.7	89.06	227997/2560	171
17	1.2	29	1.2	2190	K813_0880 IE3D112M04	200.7	87.76	7021/80	173
19	1.2	32	1.2	1967	K713_0790 IE3D112M04	147.3	78.83	20181/256	172
18	1.3	32	1.3	1981	K813_0790 IE3D112M04	200.7	79.38	45725/576	174
20	1.3	35	1.3	1789	K813_0720 IE3D112M04	200.7	71.70	10325/144	174
21	1.2	36	1.2	1777	K713_0710 IE3D112M04	147.3	71.20	4557/64	172
23	1.4	39	1.4	1618	K713_0650 IE3D112M04	147.3	64.85	33201/512	172
23	0.91	40	0.91	1590	K613_0640 IE3D112M04	119.0	63.71	130479/2048	171
25	1.4	43	1.4	1461	K713_0590 IE3D112M04	147.3	58.57	7497/128	173
25	1.0	44	1.0	1436	K613_0580 IE3D112M04	119.0	57.55	29463/512	171
29	1.6	51	1.6	1245	K713_0500 IE3D112M04	147.3	49.88	166005/3328	174
30	1.8	52	1.8	1222	K813_0490 IE3D112M04	200.7	48.99	5487/112	179
31	1.2	53	1.2	1191	K613_0480 IE3D112M04	119.0	47.73	39711/832	172
33	1.6	56	1.6	1124	K713_0450 IE3D112M04	147.3	45.05	37485/832	174
34	0.83	58	0.83	1085	K513_0440 IE3D112M04	97.5	43.50	87/2	171
33	1.8	57	1.8	1104	K813_0440 IE3D112M04	200.7	44.25	177/4	179
34	1.3	59	1.3	1076	K613_0430 IE3D112M04	119.0	43.11	8967/208	172
38	0.94	66	0.94	961	K513_0390 IE3D112M04	97.5	38.53	2697/70	171
37	1.8	65	1.8	979	K713_0390 IE3D112M04	147.3	39.23	2511/64	176
38	1.5	66	1.4	956	K613_0380 IE3D112M04	119.0	38.32	156953/4096	173
42	1.0	73	1.0	868	K513_0350 IE3D112M04	97.5	34.80	174/5	172
42	1.7	73	1.5	864	K613_0350 IE3D112M04	119.0	34.61	35441/1024	173
41	1.8	72	1.8	884	K713_0350 IE3D112M04	147.3	35.44	567/16	176
45	1.1	79	1.1	806	K513_0320 IE3D112M04	97.5	32.31	20677/640	172
46	1.8	80	1.6	795	K613_0320 IE3D112M04	119.0	31.86	130479/4096	174
50	1.2	87	1.2	728	K513_0290 IE3D112M04	97.5	29.18	4669/160	172
51	2.0	88	1.7	718	K613_0290 IE3D112M04	119.0	28.77	29463/1024	174
60	1.5	104	1.4	608	K513_0240 IE3D112M04	97.5	24.35	11687/480	173
63	0.93	–	–	590	K402_0230 IE3D112M04	91.7	23.29	559/24	171
67	1.6	115	1.5	549	K513_0220 IE3D112M04	97.5	21.99	2639/120	173
73	1.0	126	0.86	511	K402_0200 IE3D112M04	91.7	20.20	1333/66	171
76	1.9	131	1.7	483	K513_0195 IE3D112M04	97.5	19.35	27869/1440	174
77	2.3	134	2.2	474	K613_0190 IE3D112M04	119.0	18.99	17019/896	178
84	1.1	146	0.95	441	K402_0175 IE3D112M04	91.7	17.41	731/42	171
84	2.1	145	1.8	436	K513_0175 IE3D112M04	97.5	17.48	6293/360	174
86	1.2	150	0.97	429	K402_0170 IE3D112M04	91.7	16.94	559/33	171
85	2.3	148	2.3	428	K613_0170 IE3D112M04	119.0	17.16	549/32	178

n_2 50 Hz [rpm]	S 50 Hz	n_2 87 Hz [rpm]	S 87 Hz	M_{2N} [Nm]	Type	m [kg]	i	i_{exakt}	J_1 [10^{-4}kgm²]
P_N (50 Hz) = 4,00 kW, P_N (87 Hz) = 6,93 kW									
91	2.2	–	–	402	K513_0160 IE3D112M04	97.5	16.09	26071/1620	175
101	2.3	–	–	363	K513_0145 IE3D112M04	97.5	14.54	5887/405	176
105	0.88	–	–	353	K302_0140 IE3D112M04	78.2	13.94	1505/108	171
106	1.3	183	1.1	352	K402_0140 IE3D112M04	91.7	13.89	1333/96	172
116	0.94	–	–	318	K302_0125 IE3D112M04	78.2	12.58	3182/253	171
116	1.4	200	1.2	320	K402_0125 IE3D112M04	91.7	12.66	2924/231	172
126	0.99	219	0.83	294	K302_0115 IE3D112M04	78.2	11.61	1161/100	171
127	1.5	220	1.3	292	K402_0115 IE3D112M04	91.7	11.52	645/56	173
145	1.1	250	0.91	257	K302_0100 IE3D112M04	78.2	10.14	3010/297	171
145	1.6	251	1.4	256	K402_0100 IE3D112M04	91.7	10.10	1333/132	172
158	1.1	274	0.96	235	K302_0093 IE3D112M04	78.2	9.267	1075/116	172
159	1.7	275	1.5	234	K402_0092 IE3D112M04	91.7	9.238	2365/256	174
173	1.2	301	1.0	214	K302_0084 IE3D112M04	78.2	8.444	2322/275	172
175	1.8	303	1.5	212	K402_0084 IE3D112M04	91.7	8.377	645/77	173
198	1.3	343	1.1	187	K302_0074 IE3D112M04	78.2	7.391	473/64	173
219	0.82	–	–	169	K202_0067 IE3D112M04	73.2	6.683	2279/341	171
217	1.4	376	1.2	171	K302_0067 IE3D112M04	78.2	6.740	2150/319	172
218	2.1	378	1.8	170	K402_0067 IE3D112M04	91.7	6.719	215/32	174
244	0.88	–	–	152	K202_0060 IE3D112M04	73.2	6.000	6/1	172
244	1.5	423	1.3	152	K302_0060 IE3D112M04	78.2	6.000	6/1	173
273	1.7	472	1.4	136	K302_0054 IE3D112M04	78.2	5.375	43/8	173
283	0.97	490	0.81	131	K202_0052 IE3D112M04	73.2	5.177	2107/407	172
336	1.1	581	0.91	110	K202_0044 IE3D112M04	73.2	4.364	48/11	172
336	1.9	581	1.6	110	K302_0044 IE3D112M04	78.2	4.364	48/11	174
366	1.1	634	0.96	101	K202_0040 IE3D112M04	73.2	4.000	4/1	172
366	2.0	634	1.7	101	K302_0040 IE3D112M04	78.2	4.000	4/1	175
410	1.2	–	–	90	K202_0071 IE3D112M02	55.2	7.118	2107/296	56
437	1.3	–	–	85	K202_0067 IE3D112M02	55.2	6.683	2279/341	56
433	2.3	–	–	86	K302_0067 IE3D112M02	60.2	6.740	2150/319	57
487	1.4	–	–	76	K202_0060 IE3D112M02	55.2	6.000	6/1	57
564	1.5	–	–	66	K202_0052 IE3D112M02	55.2	5.177	2107/407	57
669	1.7	–	–	55	K202_0044 IE3D112M02	55.2	4.364	48/11	57
730	1.8	–	–	51	K202_0040 IE3D112M02	55.2	4.000	4/1	57
P_N (50 Hz) = 5,50 kW, P_N (87 Hz) = 9,53 kW									
5.1	1.1	–	–	9563	K1014_2900 IE3D132S04	571.0	290.4	392553/1352	353
6.1	0.87	11	0.87	8012	K914_2430 IE3D132S04	362.0	243.3	5667327/23296	353
6.2	1.3	–	–	7819	K1014_2370 IE3D132S04	571.0	237.4	49383/208	354
7.8	1.1	14	1.1	6217	K914_1890 IE3D132S04	362.0	188.8	2706021/14336	353
9.6	0.83	17	0.83	5083	K814_1540 IE3D132S04	247.8	154.3	49383/320	352
9.9	1.9	–	–	4904	K1014_1490 IE3D132S04	571.0	148.9	30969/208	356
10	1.4	17	1.4	4833	K914_1470 IE3D132S04	362.0	146.7	5258871/35840	354
11	0.92	18	0.92	4591	K814_1390 IE3D132S04	247.8	139.4	11151/80	352
12	1.0	21	1.0	4114	K814_1250 IE3D132S04	247.8	124.9	279837/2240	353
12	1.7	21	1.6	4080	K914_1240 IE3D132S04	362.0	123.9	1276425/10304	354
13	1.1	23	1.1	3716	K814_1130 IE3D132S04	247.8	112.8	9027/80	353
15	1.3	26	1.3	3241	K814_0980 IE3D132S04	247.8	98.41	181071/1840	353
16	1.7	27	1.7	3192	K913_0950 IE3D132S04	349.5	95.41	293105/3072	356
16	2.3	28	2.0	3042	K914_0920 IE3D132S04	362.0	92.35	2399679/25984	356
17	1.4	29	1.4	2927	K814_0890 IE3D132S04	247.8	88.89	40887/460	353
19	1.5	32	1.5	2656	K813_0790 IE3D132S04	234.7	79.38	45725/576	354
20	2.7	34	2.7	2510	K913_0750 IE3D132S04	349.5	75.00	62403/832	360
20	1.7	35	1.7	2437	K814_0740 IE3D132S04	247.8	73.99	1201653/16240	354
21	1.5	36	1.5	2399	K813_0720 IE3D132S04	234.7	71.70	10325/144	354
22	1.9	38	1.9	2201	K814_0670 IE3D132S04	247.8	66.83	38763/580	354
23	1.1	40	1.1	2170	K713_0650 IE3D132S04	181.3	64.85	33201/512	352
23	1.9	39	1.9	2189	K813_0650 IE3D132S04	234.7	65.41	188387/2880	355
23	2.7	41	2.7	2110	K913_0630 IE3D132S04	349.5	63.07	209901/3328	363
25	1.2	44	1.2	1960	K713_0590 IE3D132S04	181.3	58.57	7497/128	353
25	2.1	43	2.1	1977	K813_0590 IE3D132S04	234.7	59.08	42539/720	356
30	1.4	51	1.4	1669	K713_0500 IE3D132S04	181.3	49.88	166005/3328	354
30	2.6	52	2.5	1639	K813_0490 IE3D132S04	234.7	48.99	5487/112	359
33	1.6	57	1.5	1508	K713_0450 IE3D132S04	181.3	45.05	37485/832	354
33	2.8	58	2.7	1481	K813_0440 IE3D132S04	234.7	44.25	177/4	359
37	3.1	64	2.9	1339	K813_0400 IE3D132S04	234.7	40.01	12803/320	362
38	1.8	65	1.7	1313	K713_0390 IE3D132S04	181.3	39.23	2511/64	356

n_2 50 Hz [rpm]	S 50 Hz	n_2 87 Hz [rpm]	S 87 Hz	M_{2N} [Nm]	Type	m [kg]	i	i_{exakt}	J_1 [10^{-4}kgm²]
P_N (50 Hz) = 5,50 kW, P_N (87 Hz) = 9,53 kW									
39	1.1	67	1.0	1282	K613_0380 IE3D132S04	153.0	38.32	156953/4096	353
39	3.6	67	3.6	1273	K913_0380 IE3D132S04	349.5	38.04	194773/5120	380
41	3.2	71	3.1	1209	K813_0360 IE3D132S04	234.7	36.14	2891/80	363
43	1.3	74	1.1	1158	K613_0350 IE3D132S04	153.0	34.61	35441/1024	353
42	2.0	72	1.8	1186	K713_0350 IE3D132S04	181.3	35.44	567/16	356
46	0.83	79	0.83	1081	K513_0320 IE3D132S04	131.5	32.31	20677/640	352
46	1.4	80	1.2	1066	K613_0320 IE3D132S04	153.0	31.86	130479/4096	354
46	2.2	79	1.9	1085	K713_0320 IE3D132S04	181.3	32.42	33201/1024	358
51	0.92	88	0.92	976	K513_0290 IE3D132S04	131.5	29.18	4669/160	352
51	1.5	89	1.3	963	K613_0290 IE3D132S04	153.0	28.77	29463/1024	354
51	2.4	88	2.0	980	K713_0290 IE3D132S04	181.3	29.29	7497/256	358
58	4.1	–	–	854	K813_0260 IE3D132S04	234.7	25.51	140833/5520	375
59	2.7	–	–	842	K713_0250 IE3D132S04	181.3	25.18	64449/2560	362
61	1.1	105	1.1	815	K513_0240 IE3D132S04	131.5	24.35	11687/480	353
62	1.7	107	1.4	803	K613_0240 IE3D132S04	153.0	24.01	24583/1024	356
62	4.5	–	–	801	K913_0240 IE3D132S04	349.5	23.94	88877/3712	411
65	2.9	–	–	761	K713_0230 IE3D132S04	181.3	22.74	14553/640	362
67	1.2	117	1.1	736	K513_0220 IE3D132S04	131.5	21.99	2639/120	353
68	1.8	118	1.5	726	K613_0220 IE3D132S04	153.0	21.68	5551/256	356
73	3.1	–	–	677	K713_0200 IE3D132S04	181.3	20.23	119133/5888	366
76	1.4	132	1.2	648	K513_0195 IE3D132S04	131.5	19.35	27869/1440	354
78	2.0	135	1.7	636	K613_0190 IE3D132S04	153.0	18.99	17019/896	358
77	4.6	–	–	642	K813_0190 IE3D132S04	234.7	19.18	133517/6960	388
81	3.3	–	–	611	K713_0185 IE3D132S04	181.3	18.28	26901/1472	367
85	0.85	–	–	591	K402_0175 IE3D132S04	125.7	17.41	731/42	351
85	1.5	147	1.3	585	K513_0175 IE3D132S04	131.5	17.48	6293/360	354
85	4.6	–	–	580	K813_0175 IE3D132S04	234.7	17.33	30149/1740	390
87	0.86	–	–	575	K402_0170 IE3D132S04	125.7	16.94	559/33	351
86	2.1	149	1.8	574	K613_0170 IE3D132S04	153.0	17.16	549/32	358
90	3.6	–	–	548	K713_0165 IE3D132S04	181.3	16.39	6293/384	371
92	1.7	–	–	538	K513_0160 IE3D132S04	131.5	16.09	26071/1620	355
93	2.2	–	–	531	K613_0160 IE3D132S04	153.0	15.87	54839/3456	360
100	3.8	–	–	495	K713_0150 IE3D132S04	181.3	14.80	1421/96	372
102	1.8	–	–	486	K513_0145 IE3D132S04	131.5	14.54	5887/405	356
103	2.4	–	–	480	K613_0145 IE3D132S04	153.0	14.33	12383/864	361
107	0.98	185	0.82	471	K402_0140 IE3D132S04	125.7	13.89	1333/96	352
116	2.0	–	–	429	K513_0130 IE3D132S04	131.5	12.81	1537/120	357
113	4.2	–	–	436	K713_0130 IE3D132S04	181.3	13.04	3339/256	379
117	1.0	203	0.87	430	K402_0125 IE3D132S04	125.7	12.66	2924/231	352
117	2.6	–	–	423	K613_0125 IE3D132S04	153.0	12.63	3233/256	364
126	4.5	–	–	394	K713_0120 IE3D132S04	181.3	11.78	23373/1984	381
128	1.1	223	0.93	391	K402_0115 IE3D132S04	125.7	11.52	645/56	353
128	2.1	–	–	387	K513_0115 IE3D132S04	131.5	11.57	10759/930	358
147	1.2	254	1.0	343	K402_0100 IE3D132S04	125.7	10.10	1333/132	352
146	2.3	–	–	340	K513_0100 IE3D132S04	131.5	10.15	203/20	360
160	1.3	277	1.1	314	K402_0092 IE3D132S04	125.7	9.238	2365/256	354
161	2.4	–	–	307	K513_0092 IE3D132S04	131.5	9.168	1421/155	361
177	1.4	306	1.2	284	K402_0084 IE3D132S04	125.7	8.377	645/77	353
182	2.6	–	–	272	K513_0081 IE3D132S04	131.5	8.134	17081/2100	364
198	1.5	344	1.2	253	K402_0075 IE3D132S04	125.7	7.456	1849/248	355
201	2.8	–	–	246	K513_0073 IE3D132S04	131.5	7.347	551/75	366
220	1.6	382	1.3	228	K402_0067 IE3D132S04	125.7	6.719	215/32	354
247	1.7	427	1.4	204	K402_0060 IE3D132S04	125.7	6.000	6/1	357
273	1.8	473	1.5	184	K402_0054 IE3D132S04	125.7	5.422	1849/341	356
339	2.1	587	1.8	148	K402_0044 IE3D132S04	125.7	4.364	48/11	358
370	2.3	641	1.9	136	K402_0040 IE3D132S04	125.7	4.000	4/1	360
P_N (50 Hz) = 7,50 kW, P_N (87 Hz) = 12,99 kW									
5.1	0.80	–	–	13388	K1014_2900 IE3D132M04	581.0	290.4	392553/1352	433
6.2	0.95	–	–	10947	K1014_2370 IE3D132M04	581.0	237.4	49383/208	434
7.8	0.80	14	0.80	8703	K914_1890 IE3D132M04	372.0	188.8	2706021/14336	433
9.9	1.4	–	–	6865	K1014_1490 IE3D132M04	581.0	148.9	30969/208	436
10	1.0	17	1.0	6766	K914_1470 IE3D132M04	372.0	146.7	5258871/35840	434
12	1.2	21	1.1	5712	K914_1240 IE3D132M04	372.0	123.9	1276425/10304	434
13	0.81	23	0.81	5203	K814_1130 IE3D132M04	257.8	112.8	9027/80	433
15	0.93	26	0.93	4537	K814_0980 IE3D132M04	257.8	98.41	181071/1840	433

n_2 50 Hz [rpm]	S 50 Hz	n_2 87 Hz [rpm]	S 87 Hz	M_{2N} [Nm]	Type	m [kg]	i	i_{exakt}	J_1 [10^{-4}kgm²]
P_N (50 Hz) = 7,50 kW, P_N (87 Hz) = 12,99 kW									
15	1.2	27	1.2	4469	K913_0950 IE3D132M04	359.5	95.41	293105/3072	436
16	1.6	28	1.4	4258	K914_0920 IE3D132M04	372.0	92.35	2399679/25984	436
17	1.0	29	1.0	4098	K814_0890 IE3D132M04	257.8	88.89	40887/460	433
19	1.1	32	1.1	3719	K813_0790 IE3D132M04	244.7	79.38	45725/576	434
20	1.9	34	1.9	3513	K913_0750 IE3D132M04	359.5	75.00	62403/832	440
20	1.2	35	1.2	3412	K814_0740 IE3D132M04	257.8	73.99	1201653/16240	434
21	1.1	36	1.1	3359	K813_0720 IE3D132M04	244.7	71.70	10325/144	434
22	1.4	38	1.4	3082	K814_0670 IE3D132M04	257.8	66.83	38763/580	434
23	1.4	39	1.4	3064	K813_0650 IE3D132M04	244.7	65.41	188387/2880	435
23	1.9	41	1.9	2954	K913_0630 IE3D132M04	359.5	63.07	209901/3328	443
25	0.88	44	0.88	2744	K713_0590 IE3D132M04	191.3	58.57	7497/128	433
25	1.5	43	1.5	2768	K813_0590 IE3D132M04	244.7	59.08	42539/720	436
30	1.0	51	1.0	2337	K713_0500 IE3D132M04	191.3	49.88	166005/3328	434
30	1.8	52	1.8	2295	K813_0490 IE3D132M04	244.7	48.99	5487/112	439
30	2.2	52	2.2	2292	K913_0490 IE3D132M04	359.5	48.94	100223/2048	450
33	1.1	57	1.1	2111	K713_0450 IE3D132M04	191.3	45.05	37485/832	434
33	2.0	58	1.9	2073	K813_0440 IE3D132M04	244.7	44.25	177/4	439
37	2.2	64	2.0	1874	K813_0400 IE3D132M04	244.7	40.01	12803/320	442
38	1.3	65	1.2	1838	K713_0390 IE3D132M04	191.3	39.23	2511/64	436
38	0.81	–	–	1795	K613_0380 IE3D132M04	163.0	38.32	156953/4096	433
39	2.6	67	2.6	1782	K913_0380 IE3D132M04	359.5	38.04	194773/5120	460
41	2.3	71	2.2	1693	K813_0360 IE3D132M04	244.7	36.14	2891/80	443
43	0.89	–	–	1621	K613_0350 IE3D132M04	163.0	34.61	35441/1024	433
42	1.4	72	1.3	1660	K713_0350 IE3D132M04	191.3	35.44	567/16	436
46	0.97	80	0.84	1492	K613_0320 IE3D132M04	163.0	31.86	130479/4096	434
45	1.6	79	1.4	1519	K713_0320 IE3D132M04	191.3	32.42	33201/1024	438
46	2.7	79	2.4	1517	K813_0320 IE3D132M04	244.7	32.39	31093/960	447
51	1.1	89	0.90	1348	K613_0290 IE3D132M04	163.0	28.77	29463/1024	434
50	1.7	87	1.5	1372	K713_0290 IE3D132M04	191.3	29.29	7497/256	438
50	2.7	87	2.5	1370	K813_0290 IE3D132M04	244.7	29.25	7021/240	448
58	2.9	–	–	1195	K813_0260 IE3D132M04	244.7	25.51	140833/5520	455
59	1.9	–	–	1179	K713_0250 IE3D132M04	191.3	25.18	64449/2560	442
61	1.2	106	1.0	1125	K613_0240 IE3D132M04	163.0	24.01	24583/1024	436
62	3.2	–	–	1122	K913_0240 IE3D132M04	359.5	23.94	88877/3712	491
65	2.1	–	–	1065	K713_0230 IE3D132M04	191.3	22.74	14553/640	442
67	0.87	116	0.81	1030	K513_0220 IE3D132M04	141.5	21.99	2639/120	433
68	1.3	118	1.1	1016	K613_0220 IE3D132M04	163.0	21.68	5551/256	436
73	2.2	–	–	948	K713_0200 IE3D132M04	191.3	20.23	119133/5888	446
76	0.99	132	0.89	907	K513_0195 IE3D132M04	141.5	19.35	27869/1440	434
78	1.4	135	1.2	890	K613_0190 IE3D132M04	163.0	18.99	17019/896	438
77	3.3	–	–	899	K813_0190 IE3D132M04	244.7	19.18	133517/6960	468
81	2.4	–	–	856	K713_0185 IE3D132M04	191.3	18.28	26901/1472	447
84	1.1	146	0.95	819	K513_0175 IE3D132M04	141.5	17.48	6293/360	434
85	3.3	–	–	812	K813_0175 IE3D132M04	244.7	17.33	30149/1740	470
86	1.5	149	1.3	804	K613_0170 IE3D132M04	163.0	17.16	549/32	438
90	2.6	–	–	768	K713_0165 IE3D132M04	191.3	16.39	6293/384	451
92	1.2	–	–	754	K513_0160 IE3D132M04	141.5	16.09	26071/1620	435
93	1.6	–	–	743	K613_0160 IE3D132M04	163.0	15.87	54839/3456	440
100	2.7	–	–	693	K713_0150 IE3D132M04	191.3	14.80	1421/96	452
101	1.3	–	–	681	K513_0145 IE3D132M04	141.5	14.54	5887/405	436
103	1.7	–	–	671	K613_0145 IE3D132M04	163.0	14.33	12383/864	441
115	1.4	–	–	600	K513_0130 IE3D132M04	141.5	12.81	1537/120	437
113	3.0	–	–	611	K713_0130 IE3D132M04	191.3	13.04	3339/256	459
117	1.9	–	–	592	K613_0125 IE3D132M04	163.0	12.63	3233/256	444
125	3.2	–	–	552	K713_0120 IE3D132M04	191.3	11.78	23373/1984	461
127	1.5	–	–	542	K513_0115 IE3D132M04	141.5	11.57	10759/930	438
129	2.0	–	–	534	K613_0115 IE3D132M04	163.0	11.41	22631/1984	445
146	0.87	–	–	480	K402_0100 IE3D132M04	135.7	10.10	1333/132	432
145	1.6	–	–	475	K513_0100 IE3D132M04	141.5	10.15	203/20	440
160	0.92	–	–	439	K402_0092 IE3D132M04	135.7	9.238	2365/256	434
161	1.7	–	–	429	K513_0092 IE3D132M04	141.5	9.168	1421/155	441
176	0.98	305	0.82	398	K402_0084 IE3D132M04	135.7	8.377	645/77	433
181	1.9	–	–	381	K513_0081 IE3D132M04	141.5	8.134	17081/2100	444
182	2.5	–	–	380	K613_0081 IE3D132M04	163.0	8.107	85095/10496	457
198	1.1	343	0.89	354	K402_0075 IE3D132M04	135.7	7.456	1849/248	435

n_2 50 Hz [rpm]	S 50 Hz	n_2 87 Hz [rpm]	S 87 Hz	M_{2N} [Nm]	Type	m [kg]	i	i_{exakt}	J_1 [10^{-4}kgm²]
P_N (50 Hz) = 7,50 kW, P_N (87 Hz) = 12,99 kW									
201	2.0	–	–	344	K513_0073 IE3D132M04	141.5	7.347	551/75	446
220	1.1	380	0.95	319	K402_0067 IE3D132M04	135.7	6.719	215/32	434
246	1.2	426	1.0	285	K402_0060 IE3D132M04	135.7	6.000	6/1	437
272	1.3	471	1.1	258	K402_0054 IE3D132M04	135.7	5.422	1849/341	436
338	1.5	585	1.3	207	K402_0044 IE3D132M04	135.7	4.364	48/11	438
369	1.6	639	1.3	190	K402_0040 IE3D132M04	135.7	4.000	4/1	440
P_N (50 Hz) = 11,00 kW, P_N (87 Hz) = 19,05 kW									
7.7	0.94	–	–	12723	K1014_1900 IE3D160M04	606.0	190.4	514941/2704	786
9.7	1.2	–	–	10118	K1014_1510 IE3D160M04	606.0	151.4	409479/2704	787
12	1.5	–	–	8266	K1014_1240 IE3D160M04	606.0	123.7	7359555/59488	789
15	0.83	27	0.83	6476	K913_0950 IE3D160M04	384.5	95.41	293105/3072	786
16	1.1	–	–	6403	K1013_0940 IE3D160M04	577.1	94.33	235445/2496	794
16	1.7	–	–	6236	K1014_0930 IE3D160M04	606.0	93.34	252399/2704	792
20	1.3	34	1.3	5091	K913_0750 IE3D160M04	384.5	75.00	62403/832	790
23	0.95	39	0.95	4440	K813_0650 IE3D160M04	269.7	65.41	188387/2880	785
23	1.3	41	1.3	4281	K913_0630 IE3D160M04	384.5	63.07	209901/3328	793
25	1.0	43	1.0	4010	K813_0590 IE3D160M04	269.7	59.08	42539/720	786
30	1.3	52	1.2	3325	K813_0490 IE3D160M04	269.7	48.99	5487/112	789
30	1.5	52	1.5	3322	K913_0490 IE3D160M04	384.5	48.94	100223/2048	800
33	1.4	58	1.3	3004	K813_0440 IE3D160M04	269.7	44.25	177/4	789
37	1.5	64	1.4	2716	K813_0400 IE3D160M04	269.7	40.01	12803/320	792
38	0.90	65	0.83	2663	K713_0390 IE3D160M04	216.3	39.23	2511/64	786
39	1.8	67	1.8	2582	K913_0380 IE3D160M04	384.5	38.04	194773/5120	810
41	1.6	71	1.5	2453	K813_0360 IE3D160M04	269.7	36.14	2891/80	793
42	1.0	72	0.88	2405	K713_0350 IE3D160M04	216.3	35.44	567/16	786
45	1.1	79	0.94	2201	K713_0320 IE3D160M04	216.3	32.42	33201/1024	788
46	1.9	79	1.6	2198	K813_0320 IE3D160M04	269.7	32.39	31093/960	797
46	1.9	80	1.9	2180	K913_0320 IE3D160M04	384.5	32.12	47275/1472	819
50	1.2	87	1.0	1988	K713_0290 IE3D160M04	216.3	29.29	7497/256	788
50	1.9	87	1.7	1986	K813_0290 IE3D160M04	269.7	29.25	7021/240	798
58	2.0	–	–	1732	K813_0260 IE3D160M04	269.7	25.51	140833/5520	805
59	1.3	–	–	1709	K713_0250 IE3D160M04	216.3	25.18	64449/2560	792
61	0.84	–	–	1629	K613_0240 IE3D160M04	188.0	24.01	24583/1024	786
62	2.2	–	–	1625	K913_0240 IE3D160M04	384.5	23.94	88877/3712	841
65	1.4	–	–	1543	K713_0230 IE3D160M04	216.3	22.74	14553/640	792
64	2.0	–	–	1564	K813_0230 IE3D160M04	269.7	23.04	31801/1380	806
68	0.89	–	–	1472	K613_0220 IE3D160M04	188.0	21.68	5551/256	786
73	1.5	–	–	1373	K713_0200 IE3D160M04	216.3	20.23	119133/5888	796
78	0.98	135	0.82	1289	K613_0190 IE3D160M04	188.0	18.99	17019/896	788
77	2.3	–	–	1302	K813_0190 IE3D160M04	269.7	19.18	133517/6960	818
81	1.6	–	–	1240	K713_0185 IE3D160M04	216.3	18.28	26901/1472	797
85	2.3	–	–	1176	K813_0175 IE3D160M04	269.7	17.33	30149/1740	820
86	1.0	149	0.88	1164	K613_0170 IE3D160M04	188.0	17.16	549/32	788
90	1.8	–	–	1112	K713_0165 IE3D160M04	216.3	16.39	6293/384	801
93	1.1	–	–	1077	K613_0160 IE3D160M04	188.0	15.87	54839/3456	790
100	1.9	–	–	1005	K713_0150 IE3D160M04	216.3	14.80	1421/96	802
103	1.2	–	–	973	K613_0145 IE3D160M04	188.0	14.33	12383/864	791
113	2.1	–	–	885	K713_0130 IE3D160M04	216.3	13.04	3339/256	809
117	1.3	–	–	857	K613_0125 IE3D160M04	188.0	12.63	3233/256	794
125	2.2	–	–	800	K713_0120 IE3D160M04	216.3	11.78	23373/1984	811
129	1.4	–	–	774	K613_0115 IE3D160M04	188.0	11.41	22631/1984	795
182	1.7	–	–	550	K613_0081 IE3D160M04	188.0	8.107	85095/10496	807
201	1.8	–	–	497	K613_0073 IE3D160M04	188.0	7.323	19215/2624	809
P_N (50 Hz) = 15,00 kW, P_N (87 Hz) = 25,98 kW									
9.8	0.88	–	–	13680	K1014_1510 IE3D160L04	656.0	151.4	409479/2704	1574
12	1.1	–	–	11176	K1014_1240 IE3D160L04	656.0	123.7	7359555/59488	1576
16	0.85	–	–	8657	K1013_0940 IE3D160L04	627.1	94.33	235445/2496	1581
16	1.3	–	–	8432	K1014_0930 IE3D160L04	656.0	93.34	252399/2704	1579
20	0.99	34	0.99	6884	K913_0750 IE3D160L04	434.5	75.00	62403/832	1577
24	0.99	41	0.99	5788	K913_0630 IE3D160L04	434.5	63.07	209901/3328	1580
30	0.93	53	0.91	4496	K813_0490 IE3D160L04	319.7	48.99	5487/112	1576
30	1.1	53	1.1	4491	K913_0490 IE3D160L04	434.5	48.94	100223/2048	1587
34	1.0	58	0.97	4061	K813_0440 IE3D160L04	319.7	44.25	177/4	1576
37	1.1	65	1.0	3672	K813_0400 IE3D160L04	319.7	40.01	12803/320	1579
39	1.3	68	1.3	3491	K913_0380 IE3D160L04	434.5	38.04	194773/5120	1597

n_2 50 Hz [rpm]	S 50 Hz	n_2 87 Hz [rpm]	S 87 Hz	M_{2N} [Nm]	Type	m [kg]	i	i_{exakt}	J_1 [10^{-4}kgm²]
P_N (50 Hz) = 15,00 kW, P_N (87 Hz) = 25,98 kW									
41	1.2	71	1.1	3317	K813_0360 IE3D160L04	319.7	36.14	2891/80	1580
46	0.81	–	–	2976	K713_0320 IE3D160L04	266.3	32.42	33201/1024	1575
46	1.4	80	1.2	2973	K813_0320 IE3D160L04	319.7	32.39	31093/960	1584
46	1.4	80	1.4	2947	K913_0320 IE3D160L04	434.5	32.12	47275/1472	1606
51	0.89	–	–	2688	K713_0290 IE3D160L04	266.3	29.29	7497/256	1575
51	1.4	88	1.3	2685	K813_0290 IE3D160L04	319.7	29.25	7021/240	1585
58	1.5	–	–	2341	K813_0260 IE3D160L04	319.7	25.51	140833/5520	1592
59	0.98	–	–	2310	K713_0250 IE3D160L04	266.3	25.18	64449/2560	1579
62	1.6	–	–	2197	K913_0240 IE3D160L04	434.5	23.94	88877/3712	1628
66	1.0	–	–	2087	K713_0230 IE3D160L04	266.3	22.74	14553/640	1579
65	1.5	–	–	2115	K813_0230 IE3D160L04	319.7	23.04	31801/1380	1593
74	1.1	–	–	1857	K713_0200 IE3D160L04	266.3	20.23	119133/5888	1583
78	1.7	–	–	1761	K813_0190 IE3D160L04	319.7	19.18	133517/6960	1605
82	1.2	–	–	1677	K713_0185 IE3D160L04	266.3	18.28	26901/1472	1584
86	1.7	–	–	1590	K813_0175 IE3D160L04	319.7	17.33	30149/1740	1607
91	1.3	–	–	1504	K713_0165 IE3D160L04	266.3	16.39	6293/384	1588
94	0.81	–	–	1456	K613_0160 IE3D160L04	238.0	15.87	54839/3456	1577
101	1.4	–	–	1358	K713_0150 IE3D160L04	266.3	14.80	1421/96	1589
104	0.87	–	–	1315	K613_0145 IE3D160L04	238.0	14.33	12383/864	1578
114	1.5	–	–	1197	K713_0130 IE3D160L04	266.3	13.04	3339/256	1596
118	0.95	–	–	1159	K613_0125 IE3D160L04	238.0	12.63	3233/256	1581
126	1.6	–	–	1081	K713_0120 IE3D160L04	266.3	11.78	23373/1984	1598
131	1.0	–	–	1047	K613_0115 IE3D160L04	238.0	11.41	22631/1984	1582
184	1.3	–	–	744	K613_0081 IE3D160L04	238.0	8.107	85095/10496	1594
203	1.4	–	–	672	K613_0073 IE3D160L04	238.0	7.323	19215/2624	1596
P_N (50 Hz) = 18,50 kW, P_N (87 Hz) = 32,04 kW									
12	0.86	–	–	13970	K1014_1240 IE3D180M04	691.0	123.7	7359555/59488	1689
16	1.0	–	–	10540	K1014_0930 IE3D180M04	691.0	93.34	252399/2704	1692
20	1.3	–	–	8636	K1013_0750 IE3D180M04	662.1	75.28	101773/1352	1702
23	0.97	41	0.97	7236	K913_0630 IE3D180M04	469.5	63.07	209901/3328	1693
24	1.7	–	–	7061	K1013_0620 IE3D180M04	662.1	61.55	12803/208	1711
30	1.2	52	1.2	5614	K913_0490 IE3D180M04	469.5	48.94	100223/2048	1700
37	0.92	64	0.83	4590	K813_0400 IE3D180M04	354.7	40.01	12803/320	1692
38	2.4	–	–	4428	K1013_0390 IE3D180M04	662.1	38.60	8029/208	1746
39	1.6	67	1.6	4364	K913_0380 IE3D180M04	469.5	38.04	194773/5120	1710
41	1.0	71	0.89	4146	K813_0360 IE3D180M04	354.7	36.14	2891/80	1693
46	1.1	79	0.96	3716	K813_0320 IE3D180M04	354.7	32.39	31093/960	1697
46	1.9	80	1.8	3684	K913_0320 IE3D180M04	469.5	32.12	47275/1472	1719
50	1.2	87	1.0	3356	K813_0290 IE3D180M04	354.7	29.25	7021/240	1698
58	1.3	–	–	2927	K813_0260 IE3D180M04	354.7	25.51	140833/5520	1705
62	2.5	–	–	2747	K913_0240 IE3D180M04	469.5	23.94	88877/3712	1741
65	0.84	–	–	2609	K713_0230 IE3D180M04	301.3	22.74	14553/640	1692
64	1.4	–	–	2644	K813_0230 IE3D180M04	354.7	23.04	31801/1380	1706
73	0.91	–	–	2321	K713_0200 IE3D180M04	301.3	20.23	119133/5888	1696
77	1.6	–	–	2201	K813_0190 IE3D180M04	354.7	19.18	133517/6960	1718
77	2.5	–	–	2187	K913_0190 IE3D180M04	469.5	19.06	305/16	1765
81	0.97	–	–	2097	K713_0185 IE3D180M04	301.3	18.28	26901/1472	1697
85	1.7	–	–	1988	K813_0175 IE3D180M04	354.7	17.33	30149/1740	1720
90	1.0	–	–	1880	K713_0165 IE3D180M04	301.3	16.39	6293/384	1701
90	1.8	–	–	1885	K813_0165 IE3D180M04	354.7	16.43	42067/2560	1726
100	1.1	–	–	1698	K713_0150 IE3D180M04	301.3	14.80	1421/96	1702
99	1.9	–	–	1703	K813_0150 IE3D180M04	354.7	14.84	9499/640	1730
113	1.2	–	–	1496	K713_0130 IE3D180M04	301.3	13.04	3339/256	1709
118	2.5	–	–	1437	K913_0125 IE3D180M04	469.5	12.53	73749/5888	1838
125	1.3	–	–	1352	K713_0120 IE3D180M04	301.3	11.78	23373/1984	1711
143	2.5	–	–	1179	K813_0105 IE3D180M04	354.7	10.28	53041/5160	1772
145	1.4	–	–	1167	K713_0100 IE3D180M04	301.3	10.17	651/64	1722
159	2.5	–	–	1065	K813_0093 IE3D180M04	354.7	9.284	11977/1290	1781
161	1.5	–	–	1054	K713_0092 IE3D180M04	301.3	9.188	147/16	1724
176	1.6	–	–	961	K713_0084 IE3D180M04	301.3	8.373	87885/10496	1735
179	2.5	–	–	946	K813_0082 IE3D180M04	354.7	8.243	96937/11760	1809
182	1.0	–	–	930	K613_0081 IE3D180M04	273.0	8.107	85095/10496	1707
195	1.7	–	–	868	K713_0076 IE3D180M04	301.3	7.563	19845/2624	1739
198	2.5	–	–	854	K813_0074 IE3D180M04	354.7	7.445	3127/420	1822
201	1.1	–	–	840	K613_0073 IE3D180M04	273.0	7.323	19215/2624	1709

n_2 50 Hz [rpm]	S 50 Hz	n_2 87 Hz [rpm]	S 87 Hz	M_{2N} [Nm]	Type	m [kg]	i	i_{exakt}	J_1 [10^{-4}kgm²]
P_N (50 Hz) = 22,00 kW, P_N (87 Hz) = 38,11 kW									
16	0.87	–	–	12473	K1014_0930 IE3D180L04	721.0	93.34	252399/2704	2042
20	1.1	–	–	10219	K1013_0750 IE3D180L04	692.1	75.28	101773/1352	2052
23	0.82	41	0.82	8562	K913_0630 IE3D180L04	499.5	63.07	209901/3328	2043
24	1.4	–	–	8356	K1013_0620 IE3D180L04	692.1	61.55	12803/208	2061
30	1.1	52	1.1	6643	K913_0490 IE3D180L04	499.5	48.94	100223/2048	2050
38	2.0	–	–	5240	K1013_0390 IE3D180L04	692.1	38.60	8029/208	2096
39	1.4	67	1.3	5164	K913_0380 IE3D180L04	499.5	38.04	194773/5120	2060
41	0.86	–	–	4906	K813_0360 IE3D180L04	384.7	36.14	2891/80	2043
46	0.96	79	0.81	4397	K813_0320 IE3D180L04	384.7	32.39	31093/960	2047
46	1.6	80	1.5	4360	K913_0320 IE3D180L04	499.5	32.12	47275/1472	2069
51	1.0	88	0.87	3971	K813_0290 IE3D180L04	384.7	29.25	7021/240	2048
58	1.1	–	–	3463	K813_0260 IE3D180L04	384.7	25.51	140833/5520	2055
62	2.1	–	–	3250	K913_0240 IE3D180L04	499.5	23.94	88877/3712	2091
64	1.2	–	–	3128	K813_0230 IE3D180L04	384.7	23.04	31801/1380	2056
77	1.4	–	–	2604	K813_0190 IE3D180L04	384.7	19.18	133517/6960	2068
78	2.1	–	–	2588	K913_0190 IE3D180L04	499.5	19.06	305/16	2115
81	0.82	–	–	2481	K713_0185 IE3D180L04	331.3	18.28	26901/1472	2047
85	1.5	–	–	2352	K813_0175 IE3D180L04	384.7	17.33	30149/1740	2070
90	0.88	–	–	2225	K713_0165 IE3D180L04	331.3	16.39	6293/384	2051
90	1.5	–	–	2231	K813_0165 IE3D180L04	384.7	16.43	42067/2560	2076
100	0.94	–	–	2009	K713_0150 IE3D180L04	331.3	14.80	1421/96	2052
100	1.6	–	–	2015	K813_0150 IE3D180L04	384.7	14.84	9499/640	2080
113	1.0	–	–	1771	K713_0130 IE3D180L04	331.3	13.04	3339/256	2059
118	2.1	–	–	1700	K913_0125 IE3D180L04	499.5	12.53	73749/5888	2188
126	1.1	–	–	1599	K713_0120 IE3D180L04	331.3	11.78	23373/1984	2061
144	2.1	–	–	1395	K813_0105 IE3D180L04	384.7	10.28	53041/5160	2122
145	1.2	–	–	1381	K713_0100 IE3D180L04	331.3	10.17	651/64	2072
159	2.1	–	–	1260	K813_0093 IE3D180L04	384.7	9.284	11977/1290	2131
161	1.3	–	–	1247	K713_0092 IE3D180L04	331.3	9.188	147/16	2074
177	1.4	–	–	1137	K713_0084 IE3D180L04	331.3	8.373	87885/10496	2085
180	2.1	–	–	1119	K813_0082 IE3D180L04	384.7	8.243	96937/11760	2159
183	0.86	–	–	1101	K613_0081 IE3D180L04	303.0	8.107	85095/10496	2057
196	1.5	–	–	1027	K713_0076 IE3D180L04	331.3	7.563	19845/2624	2089
199	2.1	–	–	1011	K813_0074 IE3D180L04	384.7	7.445	3127/420	2172
202	0.92	–	–	994	K613_0073 IE3D180L04	303.0	7.323	19215/2624	2059
P_N (50 Hz) = 30,00 kW, P_N (87 Hz) = 51,96 kW									
24	1.1	–	–	11357	K1013_0620 IE3D200L04	779.1	61.55	12803/208	4141
31	1.3	–	–	8957	K1013_0490 IE3D200L04	779.1	48.54	171647/3536	4156
38	1.7	–	–	7122	K1013_0390 IE3D200L04	779.1	38.60	8029/208	4176
47	2.1	–	–	5818	K1013_0320 IE3D200L04	779.1	31.54	144305/4576	4202
62	2.7	–	–	4390	K1013_0240 IE3D200L04	779.1	23.79	4949/208	4250
78	1.8	–	–	3517	K913_0190 IE3D200L04	586.5	19.06	305/16	4195
94	3.3	–	–	2929	K1013_0160 IE3D200L04	779.1	15.88	37975/2392	4362
119	2.4	–	–	2311	K913_0125 IE3D200L04	586.5	12.53	73749/5888	4268
187	3.3	–	–	1464	K913_0079 IE3D200L04	586.5	7.934	54839/6912	4419
P_N (50 Hz) = 37,00 kW, P_N (87 Hz) = 64,09 kW									
24	0.86	–	–	13946	K1013_0620 IE3D225S04	819.1	61.55	12803/208	4706
31	1.1	–	–	10998	K1013_0490 IE3D225S04	819.1	48.54	171647/3536	4721
39	1.4	–	–	8746	K1013_0390 IE3D225S04	819.1	38.60	8029/208	4741
47	1.7	–	–	7145	K1013_0320 IE3D225S04	819.1	31.54	144305/4576	4767
63	2.2	–	–	5391	K1013_0240 IE3D225S04	819.1	23.79	4949/208	4815
94	2.7	–	–	3597	K1013_0160 IE3D225S04	819.1	15.88	37975/2392	4927
P_N (50 Hz) = 45,00 kW, P_N (87 Hz) = 77,94 kW									
31	0.89	–	–	13458	K1013_0490 IE3D225M04	902.1	48.54	171647/3536	6236
38	1.1	–	–	10702	K1013_0390 IE3D225M04	902.1	38.60	8029/208	6256
47	1.4	–	–	8743	K1013_0320 IE3D225M04	902.1	31.54	144305/4576	6282
62	1.8	–	–	6596	K1013_0240 IE3D225M04	902.1	23.79	4949/208	6330
93	2.2	–	–	4401	K1013_0160 IE3D225M04	902.1	15.88	37975/2392	6442

4.3 Dimensional drawings

In this chapter you can find the dimensions of the geared motors.

There is a dimensional drawing for every possible shaft/housing design, each with the tables for gear unit dimensions, motor dimensions and geared motor dimensions.

Dimensions can exceed the specifications of ISO 2768-mK due to casting tolerances or accumulation of individual tolerances.

We reserve the right to make dimensional changes due to ongoing technical development.

You can download 3D models of our standard drives at http://configurator.stoeber.de.

Tolerances

Axis height in accordance with DIN 747	Tolerance
Up to 50 mm	-0.4 mm
Up to 250 mm	-0.5 mm
Up to 630 mm	-0.6 mm

Solid shaft	Tolerance
Shaft ∅ fit ≤ 50 mm	DIN 748-1, ISO k6
Shaft ∅ fit > 50 mm	DIN 748-1, ISO m6
Feather keys	DIN 6885-1, high form A

Hollow shaft	Tolerance
Hollow shaft hole fit	ISO H7
Feather keys	DIN 6885-1, high form K1 ∅30: DIN 6885-3, low form

Flange	Pilot tolerance
Up to 300 mm	ISO j6
Starting at 350 mm	ISO h6

Centering holes in solid shafts in accordance with DIN 332-2, DR shape

Thread size	M4	M5	M6	M8	M10	M12	M16	M20	M24
Thread depth [mm]	10	12.5	16	19	22	28	36	42	50

4.3.1 A shaft design (hollow shaft), G housing design (pitch circle diameter)

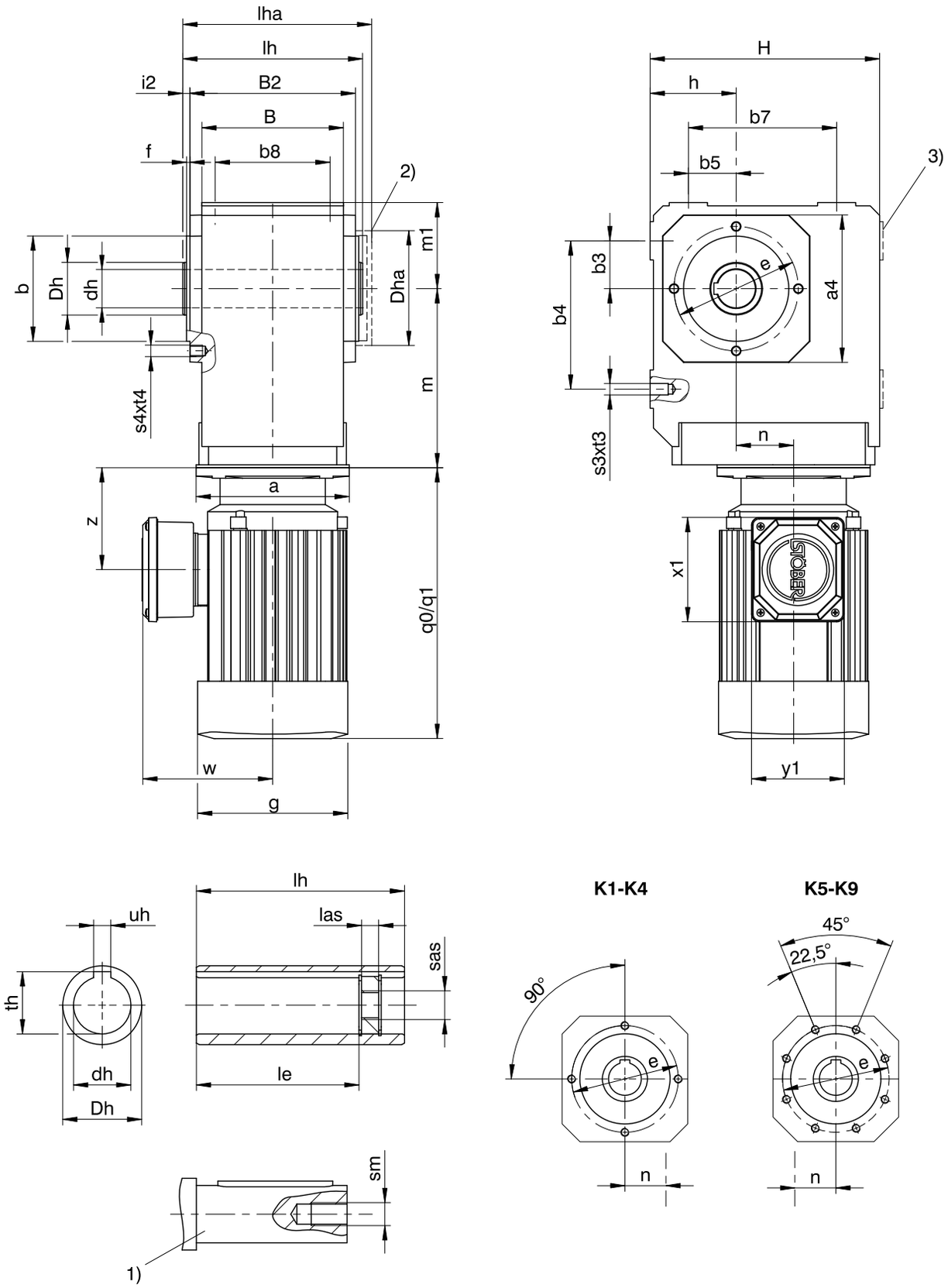

q0	Applies to motors without brake.	q1	Applies to motors with brake.
1)	The length of the machine shaft must be at least 2.2 x ∅dh and the length of the feather key must be at least 2 x ∅dh.	2)	Cover (optional)
3)	Only for K1 (other sizes on request)		

Dimensions of gear units

Type	□a4	Øb	b3	b4	b5	b7	b8	B	B2	Ødh	ØDh	Dha	Øe	f	h	H	i2	le	lh	las	lha	m1	s3	s4	sm	sas	t3	t4	th	uh
K1	105	75_{j6}	30	90	30	90	70	90	106	20^{H7}	40	□105	90	3.0	60	160	7.0	98.0	120	12	127.0	60	M8	M8	M6	M8	13	13	22.8	6^{JS9}
K1	105	75_{j6}	30	90	30	90	70	90	106	25^{H7}	40	□105	90	3.0	60	160	7.0	98.0	120	12	127.0	60	M8	M8	M10	M12	13	13	28.3	8^{JS9}
K1	105	75_{j6}	30	90	30	90	70	90	106	30^{H7}	40	□105	90	3.0	60	160	7.0	93.5	120	12	127.0	60	M8	M8	M10	M12	13	13	32.0	8^{JS9}
K2	116	82_{j6}	35	115	35	115	90	115	134	30^{H7}	45	□116	100	3.0	65	190	7.0	121.5	148	12	156.0	65	M10	M8	M10	M12	16	13	33.3	8^{JS9}
K3	132	95_{j6}	40	130	40	130	105	130	146	35^{H7}	50	□132	115	3.0	75	213	7.0	125.0	160	12	168.0	75	M10	M8	M12	M16	16	13	38.3	10^{JS9}
K4	152	110_{j6}	50	155	50	155	120	148	173	40^{H7}	55	□152	130	3.5	90	240	7.5	157.0	188	12	197.5	90	M12	M10	M16	M20	19	16	43.3	12^{JS9}
K5	145	110_{j6}	40	140	100	140	125	160	185	50^{H7}	65	□145	130	3.5	160	260	7.5	164.0	200	12	209.5	100	M16	M10	M16	M20	26	16	53.8	14^{JS9}
K6	180	140_{j6}	50	160	110	160	130	168	200	50^{H7}	70	∅183	165	3.5	190	310	7.5	179.0	215	12	224.5	120	M16	M10	M16	M20	26	16	53.8	14^{JS9}
K7	195	155_{j6}	55	180	125	180	145	190	226	60^{H7}	85	∅205	185	3.5	212	342	8.0	214.0	242	12	252.0	125	M20	M12	M20	M24	33	19	64.4	18^{JS9}
K8	226	185_{j6}	75	240	165	240	185	235	282	70^{H7}	100	∅184	215	4.0	265	410	9.0	263.0	300	20	311.0	145	M24	M12	M20	M24	38	19	74.9	20^{JS9}
K9	280	230_{j6}	95	280	185	280	225	285	330	90^{H7}	120	∅230	265	5.0	315	495	10.0	302.0	350	26	361.0	180	M30	M16	M24	M30	48	26	95.4	25^{JS9}

Dimensions of motors

Type	g	q0	q1	w	x1	y1	z
D063K04	109	179	231	115	109.0	97.0	81.0
D063M04	109	179	231	115	109.0	97.0	81.0
D071K04	124	208	260	120	109.0	97.0	94.0
D071K02	124	208	260	120	109.0	97.0	94.0
D071L04	124	208	260	120	109.0	97.0	94.0
D071L02	124	208	260	120	109.0	97.0	94.0
D080K04	139	238	295	128	109.0	97.0	97.0

Type	g	q0	q1	w	x1	y1	z
IE3D080K02	139	238	295	128	109.0	97.0	97.0
IE3D080L04	157	283	351	137	109.0	97.0	107.0
IE3D080LX02	157	283	351	137	109.0	97.0	107.0
IE3D090S04	177	310	380	146	120.0	109.0	114.0
IE3D090S02	157	283	351	137	120.0	109.0	107.0
IE3D090LX04	177	365	435	146	120.0	109.0	114.0
IE3D090L02	177	310	380	146	120.0	109.0	114.0
IE3D100KX04	196	404	491	155	120.0	109.0	120.0
IE3D100L02	196	340	427	155	120.0	109.0	120.0
IE3D100LX04	196	444	531	155	120.0	109.0	120.0
IE3D112M02	196	374	461	155	120.0	109.0	120.0
IE3D112M04	217	424	521	178	146.5	156.5	134.0
IE3D132S04	258	476	591	199	146.5	156.5	141.5
IE3D132M04	258	526	641	199	146.5	156.5	141.5
IE3D160M04	313	461	589	242	166.5	193.5	138.0
IE3D160L04	313	549	677	242	166.5	193.5	138.0
IE3D180M04	351	601	748	260	166.5	193.5	178.0
IE3D180L04	351	651	798	260	166.5	193.5	178.0
IE3D200L04	390	729	878	298	207.0	209.0	242.0

The dimensions a, m and n can be found on the next page.

Dimensions of geared motors

Type	D063			D071			D080		
	a	m	n	a	m	n	a	m	n
K102	∅140	124	36.0	∅140	124	36.0	∅160	128	36.0
K202	∅140	143	46.0	∅140	143	46.0	∅160	147	46.0
K203	∅140	180	46.0	∅140	180	46.0	–	–	–
K302	–	–	–	∅140	163	52.5	∅160	167	52.5
K303	∅140	200	52.5	∅140	200	52.5	∅160	210	16.0
K402	–	–	–	–	–	–	∅160	187	60.0
K403	–	–	–	∅140	220	60.0	∅160	230	23.0
K514	–	–	–	–	–	–	∅160	215	15.0
K614	–	–	–	–	–	–	∅160	234	18.0
K714	–	–	–	–	–	–	∅160	263	20.0

Type	IE3D080			IE3D090			IE3D100			IE3D112			IE3D132			IE3D160			IE3D180			IE3D200		
	a	m	n	a	m	n	a	m	n	a	m	n	a	m	n	a	m	n	a	m	n	a	m	n
K102	∅160	128	36.0	∅160	128	36.0	–	–	–	–	–	–	–	–	–	–	–	–	–	–	–	–	–	–
K202	∅160	147	46.0	∅160	147	46.0	∅200	149	46.0	∅200	149	46.0	–	–	–	–	–	–	–	–	–	–	–	–
K302	∅160	167	52.5	∅160	167	52.5	∅200	169	52.5	∅200	169	52.5	–	–	–	–	–	–	–	–	–	–	–	–
K303	∅160	210	16.0	∅160	210	16.0	–	–	–	–	–	–	–	–	–	–	–	–	–	–	–	–	–	–
K402	∅160	187	60.0	∅160	187	60.0	∅200	189	60.0	∅200	189	60.0	∅250	192	60.0	–	–	–	–	–	–	–	–	–
K403	∅160	230	23.0	∅160	230	23.0	–	–	–	–	–	–	–	–	–	–	–	–	–	–	–	–	–	–
K513	∅160	172	15.0	∅160	172	15.0	∅200	174	15.0	∅200	174	15.0	∅250	177	15.0	–	–	–	–	–	–	–	–	–
K514	∅160	215	15.0	∅160	215	15.0	–	–	–	–	–	–	–	–	–	–	–	–	–	–	–	–	–	–
K613	∅160	191	18.0	∅160	191	18.0	∅200	193	18.0	∅200	193	18.0	∅250	196	18.0	∅300	210	18.0	∅300	210	18.0	–	–	–
K614	∅160	234	18.0	∅160	234	18.0	–	–	–	–	–	–	–	–	–	–	–	–	–	–	–	–	–	–
K713	–	–	–	–	–	–	∅200	221	20.0	∅200	221	20.0	∅250	224	20.0	∅300	237	20.0	∅300	237	20.0	–	–	–
K714	∅160	263	20.0	∅160	263	20.0	∅200	283	20.0	∅200	283	20.0	–	–	–	–	–	–	–	–	–	–	–	–
K813	–	–	–	–	–	–	∅200	247	24.0	∅200	247	24.0	∅250	249	24.0	∅300	262	24.0	∅300	262	24.0	–	–	–
K814	–	–	–	–	–	–	∅200	308	24.0	∅200	308	24.0	∅250	320	5.0	–	–	–	–	–	–	–	–	–
K913	–	–	–	–	–	–	–	–	–	–	–	–	∅250	294	25.0	∅300	307	25.0	∅300	307	25.0	∅350	330	25.0
K914	–	–	–	–	–	–	∅200	353	25.0	∅200	353	25.0	∅250	365	25.0	–	–	–	–	–	–	–	–	–

4.3.2 A shaft design (hollow shaft), NG housing design (base + pitch circle diameter)

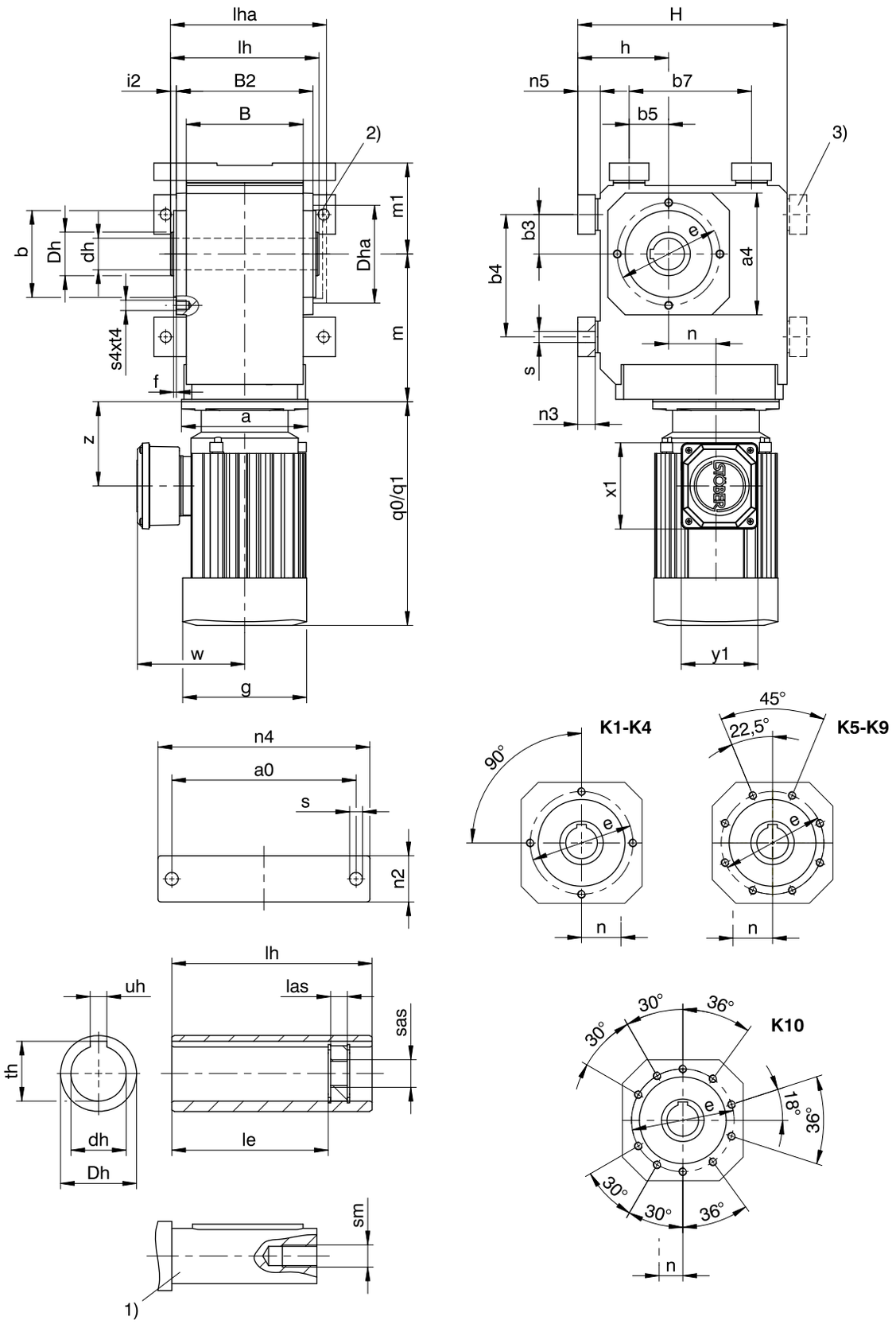

q0	Applies to motors without brake.	q1	Applies to motors with brake.
1)	The length of the machine shaft must be at least 2.2 x ∅dh and the length of the feather key must be at least 2 x ∅dh.	2)	Cover (optional)
3)	Only for K1 (other sizes on request)		

Dimensions of gear units

Type	a0	□a4	Øb	b3	b4	b5	b7	B	B2	Ødh	ØDh	Dha	Øe	f	h	H
K1	115	105	75_{j6}	30	90	30	90	90	106	20^{H7}	40	□105	90	3.0	75	175
K1	115	105	75_{j6}	30	90	30	90	90	106	25^{H7}	40	□105	90	3.0	75	175
K1	115	105	75_{j6}	30	90	30	90	90	106	30^{H7}	40	□105	90	3.0	75	175
K2	155	116	82_{j6}	35	115	35	115	115	134	30^{H7}	45	□116	100	3.0	88	213
K3	170	132	95_{j6}	40	130	40	130	130	146	35^{H7}	50	□132	115	3.0	98	236
K4	200	152	110_{j6}	50	155	50	155	148	173	40^{H7}	55	□152	130	3.5	115	265
K5	200	145	110_{j6}	40	140	100	140	160	185	50^{H7}	65	□145	130	3.5	190	290
K6	210	180	140_{j6}	50	160	110	160	168	200	50^{H7}	70	∅183	165	3.5	220	340
K7	241	195	155_{j6}	55	180	125	180	190	226	60^{H7}	85	∅205	185	3.5	250	380
K8	300	226	185_{j6}	75	240	165	240	235	282	70^{H7}	100	∅184	215	4.0	310	455
K9	360	280	230_{j6}	95	280	185	280	285	330	90^{H7}	120	∅230	265	5.0	365	545
K10	330	340	250_{h6}	115	350	265	420	400	356	100^{H7}	130	∅200	300	20.0	420	636

Type	i2	le	lh	las	lha	m1	n2	n3	n4	n5	Øs	s4	sm	sas	t4	th	uh
K1	7.0	98.0	120	12	127.0	75	30	13	140	15	9.0	M8	M10	M12	13	28.3	8^{JS9}
K1	7.0	98.0	120	12	127.0	75	30	13	140	15	9.0	M8	M6	M8	13	22.8	6^{JS9}
K1	7.0	93.5	120	12	127.0	75	30	13	140	15	9.0	M8	M10	M12	13	32.0	8^{JS9}
K2	7.0	121.5	148	12	156.0	88	40	20	185	23	11.0	M8	M10	M12	13	33.3	8^{JS9}
K3	7.0	125.0	160	12	168.0	98	45	20	200	23	11.0	M8	M12	M16	13	38.3	10^{JS9}
K4	7.5	157.0	188	12	197.5	115	50	22	230	25	14.0	M10	M16	M20	16	43.3	12^{JS9}
K5	7.5	164.0	200	12	209.5	130	60	27	240	30	18.0	M10	M16	M20	16	53.8	14^{JS9}
K6	7.5	179.0	215	12	224.5	150	65	27	250	30	18.5	M10	M16	M20	16	53.8	14^{JS9}
K7	8.0	214.0	242	12	252.0	163	70	35	290	38	23.0	M12	M20	M24	19	64.4	18^{JS9}
K8	9.0	263.0	300	20	311.0	190	85	41	360	45	27.0	M12	M20	M24	19	74.9	20^{JS9}
K9	10.0	302.0	350	26	361.0	230	95	46	430	50	31.0	M16	M24	M30	26	95.4	25^{JS9}
K10	27.0	361.0	410	26	441.0	270	120	–	400	45	39.0	M20	M24	M30	33	106.4	28^{JS9}

Dimensions of motors

Type	g	q0	q1	w	x1	y1	z
D063K04	109	179	231	115	109.0	97.0	81.0
D063M04	109	179	231	115	109.0	97.0	81.0
D071K04	124	208	260	120	109.0	97.0	94.0
D071K02	124	208	260	120	109.0	97.0	94.0
D071L04	124	208	260	120	109.0	97.0	94.0
D071L02	124	208	260	120	109.0	97.0	94.0
D080K04	139	238	295	128	109.0	97.0	97.0

Type	g	q0	q1	w	x1	y1	z
IE3D080K02	139	238	295	128	109.0	97.0	97.0
IE3D080L04	157	283	351	137	109.0	97.0	107.0
IE3D080LX02	157	283	351	137	109.0	97.0	107.0
IE3D090S04	177	310	380	146	120.0	109.0	114.0
IE3D090S02	157	283	351	137	120.0	109.0	107.0
IE3D090LX04	177	365	435	146	120.0	109.0	114.0
IE3D090L02	177	310	380	146	120.0	109.0	114.0
IE3D100KX04	196	404	491	155	120.0	109.0	120.0
IE3D100L02	196	340	427	155	120.0	109.0	120.0
IE3D100LX04	196	444	531	155	120.0	109.0	120.0
IE3D112M02	196	374	461	155	120.0	109.0	120.0
IE3D112M04	217	424	521	178	146.5	156.5	134.0
IE3D132S04	258	476	591	199	146.5	156.5	141.5
IE3D132M04	258	526	641	199	146.5	156.5	141.5
IE3D160M04	313	461	589	242	166.5	193.5	138.0
IE3D160L04	313	549	677	242	166.5	193.5	138.0
IE3D180M04	351	601	748	260	166.5	193.5	178.0
IE3D180L04	351	651	798	260	166.5	193.5	178.0
IE3D200L04	390	729	878	298	207.0	209.0	242.0
IE3D225S04	390	706	855	300	207.0	209.0	169.0
IE3D225M04	440	838	986	324	207.0	209.0	242.0

The dimensions a, m and n can be found on the next page.

Dimensions of geared motors

Type	D063			D071			D080		
	a	m	n	a	m	n	a	m	n
K102	∅140	124	36.0	∅140	124	36.0	∅160	128	36.0
K202	∅140	143	46.0	∅140	143	46.0	∅160	147	46.0
K203	∅140	180	46.0	∅140	180	46.0	–	–	–
K302	–	–	–	∅140	163	52.5	∅160	167	52.5
K303	∅140	200	52.5	∅140	200	52.5	∅160	210	16.0
K402	–	–	–	–	–	–	∅160	187	60.0
K403	–	–	–	∅140	220	60.0	∅160	230	23.0
K514	–	–	–	–	–	–	∅160	215	15.0
K614	–	–	–	–	–	–	∅160	234	18.0
K714	–	–	–	–	–	–	∅160	263	20.0

Type	IE3D080			IE3D090			IE3D100			IE3D112			IE3D132			IE3D160			IE3D180			IE3D200			IE3D225		
	a	m	n	a	m	n	a	m	n	a	m	n	a	m	n	a	m	n	a	m	n	a	m	n	a	m	n
K102	∅160	128	36.0	∅160	128	36.0	–	–	–	–	–	–	–	–	–	–	–	–	–	–	–	–	–	–	–	–	–
K202	∅160	147	46.0	∅160	147	46.0	∅200	149	46.0	∅200	149	46.0	–	–	–	–	–	–	–	–	–	–	–	–	–	–	–
K302	∅160	167	52.5	∅160	167	52.5	∅200	169	52.5	∅200	169	52.5	–	–	–	–	–	–	–	–	–	–	–	–	–	–	–
K303	∅160	210	16.0	∅160	210	16.0	–	–	–	–	–	–	–	–	–	–	–	–	–	–	–	–	–	–	–	–	–
K402	∅160	187	60.0	∅160	187	60.0	∅200	189	60.0	∅200	189	60.0	∅250	192	60.0	–	–	–	–	–	–	–	–	–	–	–	–
K403	∅160	230	23.0	∅160	230	23.0	–	–	–	–	–	–	–	–	–	–	–	–	–	–	–	–	–	–	–	–	–
K513	∅160	172	15.0	∅160	172	15.0	∅200	174	15.0	∅200	174	15.0	∅250	177	15.0	–	–	–	–	–	–	–	–	–	–	–	–
K514	∅160	215	15.0	∅160	215	15.0	–	–	–	–	–	–	–	–	–	–	–	–	–	–	–	–	–	–	–	–	–
K613	∅160	191	18.0	∅160	191	18.0	∅200	193	18.0	∅200	193	18.0	∅250	196	18.0	∅300	210	18.0	∅300	210	18.0	–	–	–	–	–	–
K614	∅160	234	18.0	∅160	234	18.0	–	–	–	–	–	–	–	–	–	–	–	–	–	–	–	–	–	–	–	–	–
K713	–	–	–	–	–	–	∅200	221	20.0	∅200	221	20.0	∅250	224	20.0	∅300	237	20.0	∅300	237	20.0	–	–	–	–	–	–
K714	∅160	263	20.0	∅160	263	20.0	∅200	283	20.0	∅200	283	20.0	–	–	–	–	–	–	–	–	–	–	–	–	–	–	–
K813	–	–	–	–	–	–	∅200	247	24.0	∅200	247	24.0	∅250	249	24.0	∅300	262	24.0	∅300	262	24.0	–	–	–	–	–	–
K814	–	–	–	–	–	–	∅200	308	24.0	∅200	308	24.0	∅250	320	5.0	–	–	–	–	–	–	–	–	–	–	–	–
K913	–	–	–	–	–	–	–	–	–	–	–	–	∅250	294	25.0	∅300	307	25.0	∅300	307	25.0	∅350	330	25.0	–	–	–
K914	–	–	–	–	–	–	∅200	353	25.0	∅200	353	25.0	∅250	365	25.0	–	–	–	–	–	–	–	–	–	–	–	–
K1013	–	–	–	–	–	–	–	–	–	–	–	–	–	–	–	∅300	392	28.0	∅300	392	28.0	∅350	415	28.0	∅400	415	28.0
K1014	–	–	–	–	–	–	–	–	–	–	–	–	∅250	450	28.0	∅300	475	28.0	∅300	475	28.0	–	–	–	–	–	–

4.3.3 A shaft design (hollow shaft), GD housing design (pitch circle diameter + torque arm bracket)

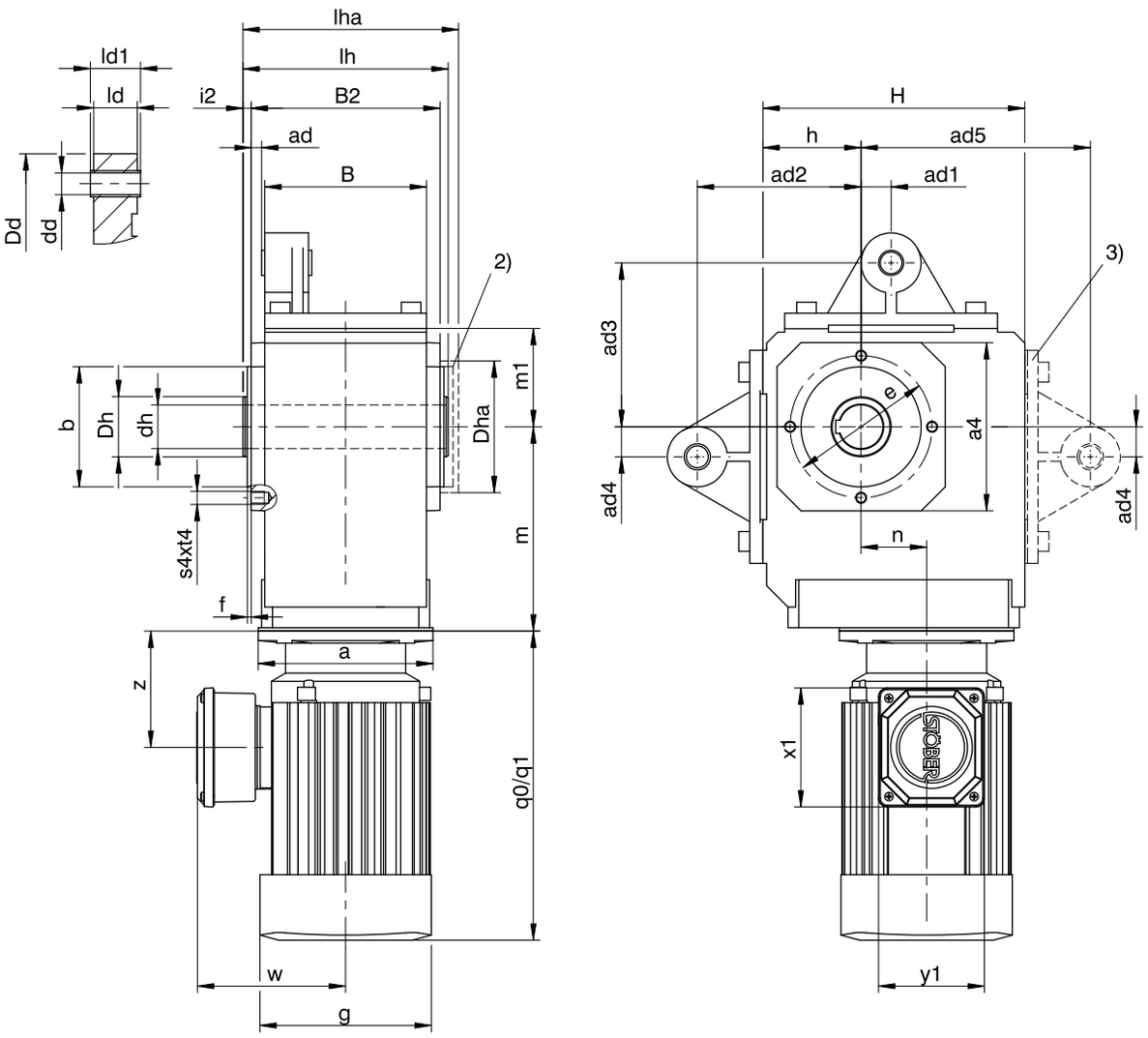

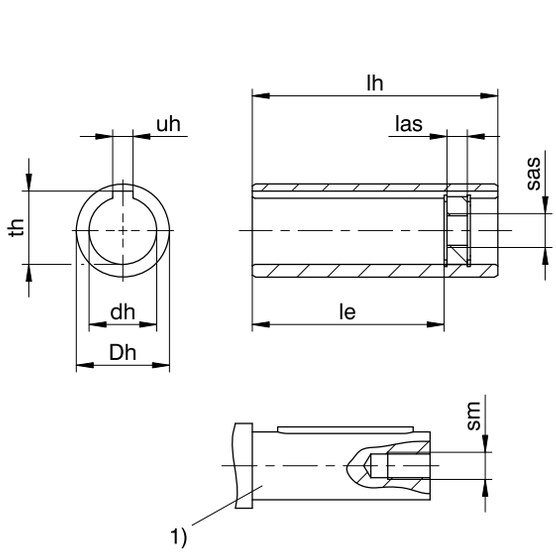

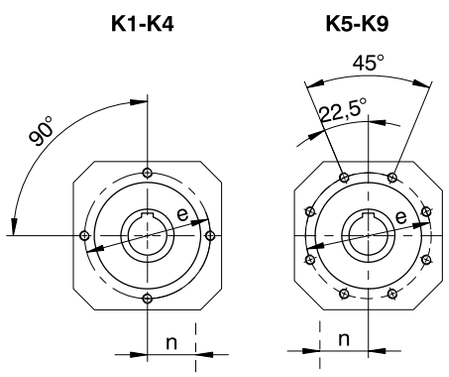

q0	Applies to motors without brake.	q1	Applies to motors with brake.
1)	The length of the machine shaft must be at least 2.2 x ∅dh and the length of the feather key must be at least 2 x ∅dh.	2)	Cover (optional)
3)	Only for K1 (other sizes on request)	–	If you brace the gear units without the factory-adjusted torque arms provided for this purpose, the dimensions for ad2 and ad3 must meet the specified value.

Dimensions of gear units

Type	□a4	ad	ad1	ad2	ad3	ad4	ad5	Øb	B	B2	Ødd	Ødh	ØDd	ØDh	Dha	Øe	f
K1	105	6.0	15.0	90	90	15.0	130	75_{j6}	90	106	12^{H9}	20^{H7}	43	40	□105	90	3.0
K1	105	6.0	15.0	90	90	15.0	130	75_{j6}	90	106	12^{H9}	25^{H7}	43	40	□105	90	3.0
K1	105	6.0	15.0	90	90	15.0	130	75_{j6}	90	106	12^{H9}	30^{H7}	43	40	□105	90	3.0
K2	116	6.5	22.5	100	100	22.5	–	82_{j6}	115	134	16^{H9}	30^{H7}	45	45	□116	100	3.0
K3	132	5.0	25.0	120	120	25.0	–	95_{j6}	130	146	16^{H9}	35^{H7}	45	50	□132	115	3.0
K4	152	9.5	27.5	150	150	27.5	–	110_{j6}	148	173	20^{H9}	40^{H7}	55	55	□152	130	3.5
K5	145	9.5	30.0	250	190	30.0	–	110_{j6}	160	185	20^{H9}	50^{H7}	58	65	□145	130	3.5
K6	180	13.0	30.0	250	180	30.0	–	140_{j6}	168	200	20^{H9}	50^{H7}	58	70	∅183	165	3.5
K7	195	15.0	35.0	300	213	35.0	–	155_{j6}	190	226	20^{H9}	60^{H7}	68	85	∅205	185	3.5
K8	226	17.0	45.0	350	230	45.0	–	185_{j6}	235	282	24^{H9}	70^{H7}	72	100	∅184	215	4.0
K9	280	16.0	45.0	450	315	45.0	–	230_{j6}	285	330	24^{H9}	90^{H7}	75	120	∅230	265	5.0

Dimensions of gear units

Type	h	H	i2	ld	ld1	le	lh	las	lha	m1	s4	sm	sas	t4	th	uh
K1	60	160	7.0	24	28	98.0	120	12	127.0	60	M8	M6	M8	13	22.8	6^{JS9}
K1	60	160	7.0	24	28	98.0	120	12	127.0	60	M8	M10	M12	13	28.3	8^{JS9}
K1	60	160	7.0	24	28	93.5	120	12	127.0	60	M8	M10	M12	13	32.0	8^{JS9}
K2	65	190	7.0	32	38	121.5	148	12	156.0	65	M8	M10	M12	13	33.3	8^{JS9}
K3	75	213	7.0	32	38	125.0	160	12	168.0	75	M8	M12	M16	13	38.3	10^{JS9}
K4	90	240	7.5	40	46	157.0	188	12	197.5	90	M10	M16	M20	16	43.3	12^{JS9}
K5	160	260	7.5	40	46	164.0	200	12	209.5	100	M10	M16	M20	16	53.8	14^{JS9}
K6	190	310	7.5	40	46	179.0	215	12	224.5	120	M10	M16	M20	16	53.8	14^{JS9}
K7	212	342	8.0	64	70	214.0	242	12	252.0	125	M12	M20	M24	19	64.4	18^{JS9}
K8	265	410	9.0	102	115	263.0	300	20	311.0	145	M12	M20	M24	19	74.9	20^{JS9}
K9	315	495	10.0	102	115	302.0	350	26	361.0	180	M16	M24	M30	26	95.4	25^{JS9}

Dimensions of motors

Type	g	q0	q1	w	x1	y1	z
D063K04	109	179	231	115	109.0	97.0	81.0
D063M04	109	179	231	115	109.0	97.0	81.0
D071K04	124	208	260	120	109.0	97.0	94.0
D071K02	124	208	260	120	109.0	97.0	94.0
D071L04	124	208	260	120	109.0	97.0	94.0
D071L02	124	208	260	120	109.0	97.0	94.0
D080K04	139	238	295	128	109.0	97.0	97.0

Type	g	q0	q1	w	x1	y1	z
IE3D080K02	139	238	295	128	109.0	97.0	97.0
IE3D080L04	157	283	351	137	109.0	97.0	107.0
IE3D080LX02	157	283	351	137	109.0	97.0	107.0
IE3D090S04	177	310	380	146	120.0	109.0	114.0
IE3D090S02	157	283	351	137	120.0	109.0	107.0
IE3D090LX04	177	365	435	146	120.0	109.0	114.0
IE3D090L02	177	310	380	146	120.0	109.0	114.0
IE3D100KX04	196	404	491	155	120.0	109.0	120.0
IE3D100L02	196	340	427	155	120.0	109.0	120.0
IE3D100LX04	196	444	531	155	120.0	109.0	120.0
IE3D112M02	196	374	461	155	120.0	109.0	120.0
IE3D112M04	217	424	521	178	146.5	156.5	134.0
IE3D132S04	258	476	591	199	146.5	156.5	141.5
IE3D132M04	258	526	641	199	146.5	156.5	141.5
IE3D160M04	313	461	589	242	166.5	193.5	138.0
IE3D160L04	313	549	677	242	166.5	193.5	138.0
IE3D180M04	351	601	748	260	166.5	193.5	178.0
IE3D180L04	351	651	798	260	166.5	193.5	178.0
IE3D200L04	390	729	878	298	207.0	209.0	242.0

The dimensions a, m and n can be found on the next page.

Dimensions of geared motors

Type	D063			D071			D080		
	a	m	n	a	m	n	a	m	n
K102	∅140	124	36.0	∅140	124	36.0	∅160	128	36.0
K202	∅140	143	46.0	∅140	143	46.0	∅160	147	46.0
K203	∅140	180	46.0	∅140	180	46.0	–	–	–
K302	–	–	–	∅140	163	52.5	∅160	167	52.5
K303	∅140	200	52.5	∅140	200	52.5	∅160	210	16.0
K402	–	–	–	–	–	–	∅160	187	60.0
K403	–	–	–	∅140	220	60.0	∅160	230	23.0
K514	–	–	–	–	–	–	∅160	215	15.0
K614	–	–	–	–	–	–	∅160	234	18.0
K714	–	–	–	–	–	–	∅160	263	20.0

Type	IE3D080			IE3D090			IE3D100			IE3D112			IE3D132			IE3D160			IE3D180			IE3D200		
	a	m	n	a	m	n	a	m	n	a	m	n	a	m	n	a	m	n	a	m	n	a	m	n
K102	∅160	128	36.0	∅160	128	36.0	–	–	–	–	–	–	–	–	–	–	–	–	–	–	–	–	–	–
K202	∅160	147	46.0	∅160	147	46.0	∅200	149	46.0	∅200	149	46.0	–	–	–	–	–	–	–	–	–	–	–	–
K302	∅160	167	52.5	∅160	167	52.5	∅200	169	52.5	∅200	169	52.5	–	–	–	–	–	–	–	–	–	–	–	–
K303	∅160	210	16.0	∅160	210	16.0	–	–	–	–	–	–	–	–	–	–	–	–	–	–	–	–	–	–
K402	∅160	187	60.0	∅160	187	60.0	∅200	189	60.0	∅200	189	60.0	∅250	192	60.0	–	–	–	–	–	–	–	–	–
K403	∅160	230	23.0	∅160	230	23.0	–	–	–	–	–	–	–	–	–	–	–	–	–	–	–	–	–	–
K513	∅160	172	15.0	∅160	172	15.0	∅200	174	15.0	∅200	174	15.0	∅250	177	15.0	–	–	–	–	–	–	–	–	–
K514	∅160	215	15.0	∅160	215	15.0	–	–	–	–	–	–	–	–	–	–	–	–	–	–	–	–	–	–
K613	∅160	191	18.0	∅160	191	18.0	∅200	193	18.0	∅200	193	18.0	∅250	196	18.0	∅300	210	18.0	∅300	210	18.0	–	–	–
K614	∅160	234	18.0	∅160	234	18.0	–	–	–	–	–	–	–	–	–	–	–	–	–	–	–	–	–	–
K713	–	–	–	–	–	–	∅200	221	20.0	∅200	221	20.0	∅250	224	20.0	∅300	237	20.0	∅300	237	20.0	–	–	–
K714	∅160	263	20.0	∅160	263	20.0	∅200	283	20.0	∅200	283	20.0	–	–	–	–	–	–	–	–	–	–	–	–
K813	–	–	–	–	–	–	∅200	247	24.0	∅200	247	24.0	∅250	249	24.0	∅300	262	24.0	∅300	262	24.0	–	–	–
K814	–	–	–	–	–	–	∅200	308	24.0	∅200	308	24.0	∅250	320	5.0	–	–	–	–	–	–	–	–	–
K913	–	–	–	–	–	–	–	–	–	–	–	–	∅250	294	25.0	∅300	307	25.0	∅300	307	25.0	∅350	330	25.0
K914	–	–	–	–	–	–	∅200	353	25.0	∅200	353	25.0	∅250	365	25.0	–	–	–	–	–	–	–	–	–

4.3.4 A shaft design (hollow shaft), NGD housing design (foot + pitch circle diameter + torque arm bracket)

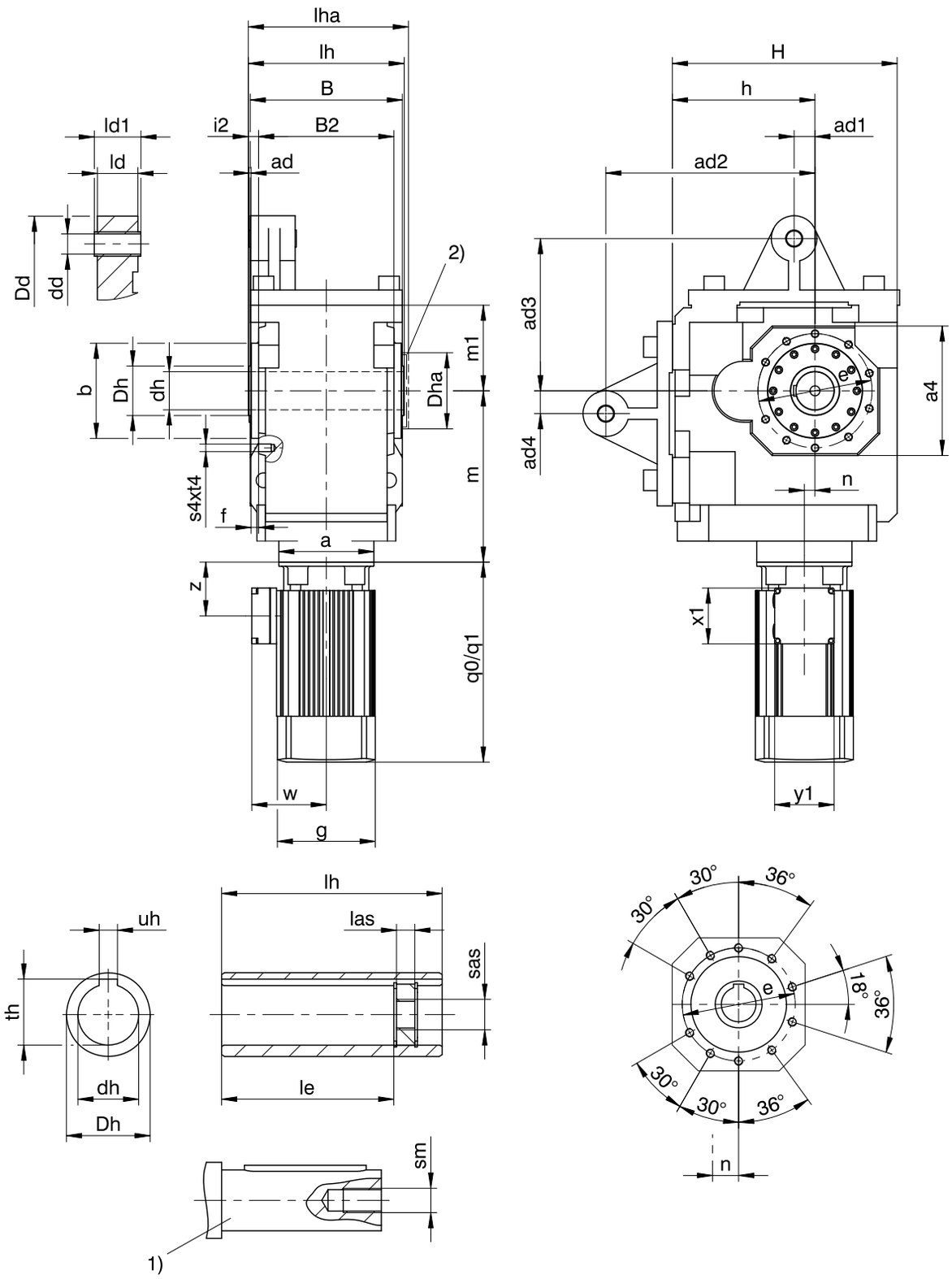

q0	Applies to motors without brake.	q1	Applies to motors with brake.
1)	The length of the machine shaft must be at least 2.2 x ∅dh and the length of the feather key must be at least 2 x ∅dh.	2)	Cover (optional)
–	If you brace the gear units without the factory-adjusted torque arms provided for this purpose, the dimensions for ad2 and ad3 must meet the specified value.		

Dimensions of gear units

Type	□a4	ad	ad1	ad2	ad3	ad4	Øb	B	B2	Ødd	Ødh	ØDd	ØDh	Dha	Øe	f
K10	340	5	60	550	400	55	250_{h6}	400	356	40^{H9}	100^{H7}	120	130	∅200	300	20

Dimensions of gear units

Type	h	H	i2	ld	ld1	le	lh	las	lha	m1	s4	sm	sas	t4	th	uh
K10	375	591	27	118	124	361	410	26	441	225	M20	M24	M30	33	106.4	28^{JS9}

Dimensions of motors

Type	□g	q0	q1	w	x1	y1	z
IE3D132M04	258	526	641	199	146.5	156.5	141.5
IE3D132S04	258	476	591	199	146.5	156.5	141.5
IE3D160L04	313	549	677	242	166.5	193.5	138.0
IE3D160M04	313	461	589	242	166.5	193.5	138.0
IE3D180L04	351	651	798	260	166.5	193.5	178.0
IE3D180M04	351	601	748	260	166.5	193.5	178.0
IE3D200L04	390	729	878	298	207.0	209.0	242.0
IE3D225M04	440	838	986	324	207.0	209.0	242.0
IE3D225S04	390	706	855	300	207.0	209.0	169.0

Dimensions of geared motors

Type	IE3D132			IE3D160			IE3D180			IE3D200			IE3D225		
	a	m	n	a	m	n	a	m	n	a	m	n	a	m	n
K1013	–	–	–	∅300	392	28.0	∅300	392	28.0	∅350	415	28.0	∅400	415	28.0
K1014	∅250	450	28.0	∅300	475	28.0	∅300	475	28.0	–	–	–	–	–	–

4.3.5 A shaft design (hollow shaft), F housing design (round flange)

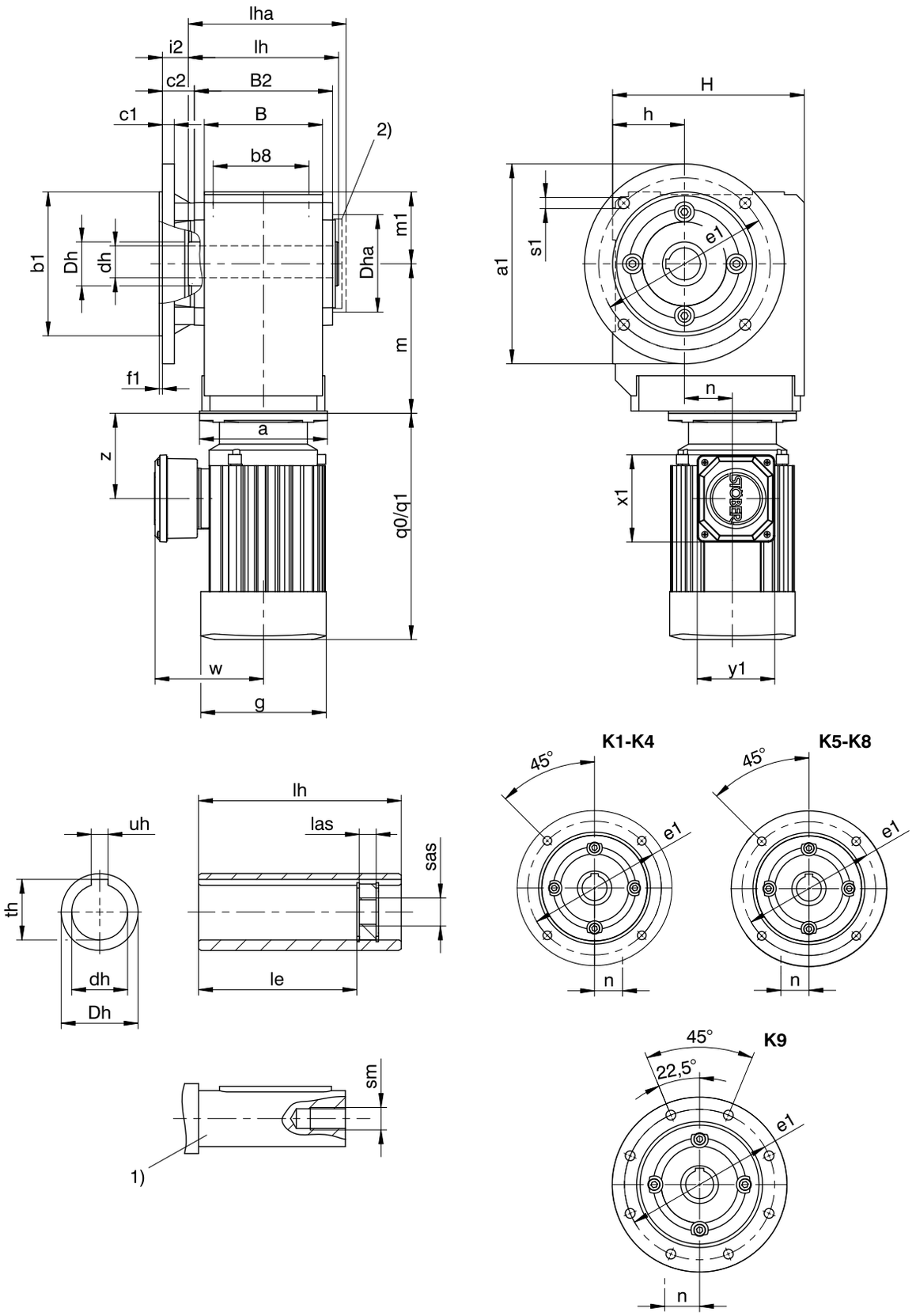

q0	Applies to motors without brake.	q1	Applies to motors with brake.
1)	The length of the machine shaft must be at least 2.2 x ∅dh and the length of the feather key must be at least 2 x ∅dh.	2)	Cover (optional)

Dimensions of gear units

Type	Øa1	Øb1	b8	B	B2	c1	c2	Ødh	ØDh	Dha	Øe1	f1	h	H	i2	le	lh	las	lha	m1	Øs1	sm	sas	th	uh
K1	160	110_{j6}	70	90	106	10	32.0	20^{H7}	40	□105	130	3.5	60	160	25.0	98.0	120	12	127.0	60	9	M6	M8	22.8	6^{JS9}
K1	160	110_{j6}	70	90	106	10	32.0	25^{H7}	40	□105	130	3.5	60	160	25.0	98.0	120	12	127.0	60	9	M10	M12	28.3	8^{JS9}
K1	160	110_{j6}	70	90	106	10	32.0	30^{H7}	40	□105	130	3.5	60	160	25.0	93.5	120	12	127.0	60	9	M10	M12	32.0	8^{JS9}
K2	200	130_{j6}	90	115	134	12	32.0	30^{H7}	45	□116	165	3.5	65	190	25.0	121.5	148	12	156.0	65	11	M10	M12	33.3	8^{JS9}
K3	200	130_{j6}	105	130	146	14	38.0	35^{H7}	50	□132	165	3.5	75	213	31.0	125.0	160	12	168.0	75	11	M12	M16	38.3	10^{JS9}
K4	250	180_{j6}	120	148	173	15	40.0	40^{H7}	55	□152	215	4.0	90	240	32.5	157.0	188	12	197.5	90	14	M16	M20	43.3	12^{JS9}
K5	250	180_{j6}	125	160	185	15	39.5	50^{H7}	65	□145	215	4.0	160	260	32.0	164.0	200	12	209.5	100	14	M16	M20	53.8	14^{JS9}
K6	300	230_{j6}	130	168	200	17	36.0	50^{H7}	70	∅183	265	4.0	190	310	28.5	179.0	215	12	224.5	120	14	M16	M20	53.8	14^{JS9}
K7	350	250_{h6}	145	190	226	18	44.0	60^{H7}	85	∅205	300	5.0	212	342	36.0	214.0	242	12	252.0	125	18	M20	M24	64.4	18^{JS9}
K8	400	300_{h6}	185	235	282	20	45.0	70^{H7}	100	∅184	350	5.0	265	410	36.0	263.0	300	20	311.0	145	18	M20	M24	74.9	20^{JS9}
K9	450	350_{h6}	225	285	330	23	50.0	90^{H7}	120	∅230	400	5.0	315	495	40.0	302.0	350	26	361.0	180	18	M24	M30	95.4	25^{JS9}

Dimensions of additional round flanges

Type	Øa1	Øb1	c1	Øe1	f1	Øs1
K1	140	95_{j6}	10	115	3.0	9
K2	160	110_{j6}	12	130	3.5	9
K3	160	110_{j6}	14	130	3.5	9
K3	250	180_{j6}	14	215	4.0	14
K8	350	250_{h6}	18	300	5.0	18
K8	450	350_{h6}	20	400	5.0	18

Dimensions of motors

Type	g	q0	q1	w	x1	y1	z
D063K04	109	179	231	115	109.0	97.0	81.0
D063M04	109	179	231	115	109.0	97.0	81.0
D071K04	124	208	260	120	109.0	97.0	94.0
D071K02	124	208	260	120	109.0	97.0	94.0
D071L04	124	208	260	120	109.0	97.0	94.0
D071L02	124	208	260	120	109.0	97.0	94.0
D080K04	139	238	295	128	109.0	97.0	97.0

Type	g	q0	q1	w	x1	y1	z
IE3D080K02	139	238	295	128	109.0	97.0	97.0
IE3D080L04	157	283	351	137	109.0	97.0	107.0
IE3D080LX02	157	283	351	137	109.0	97.0	107.0
IE3D090S04	177	310	380	146	120.0	109.0	114.0
IE3D090S02	157	283	351	137	120.0	109.0	107.0
IE3D090LX04	177	365	435	146	120.0	109.0	114.0
IE3D090L02	177	310	380	146	120.0	109.0	114.0
IE3D100KX04	196	404	491	155	120.0	109.0	120.0
IE3D100L02	196	340	427	155	120.0	109.0	120.0
IE3D100LX04	196	444	531	155	120.0	109.0	120.0
IE3D112M02	196	374	461	155	120.0	109.0	120.0
IE3D112M04	217	424	521	178	146.5	156.5	134.0
IE3D132S04	258	476	591	199	146.5	156.5	141.5
IE3D132M04	258	526	641	199	146.5	156.5	141.5
IE3D160M04	313	461	589	242	166.5	193.5	138.0
IE3D160L04	313	549	677	242	166.5	193.5	138.0
IE3D180M04	351	601	748	260	166.5	193.5	178.0
IE3D180L04	351	651	798	260	166.5	193.5	178.0
IE3D200L04	390	729	878	298	207.0	209.0	242.0

The dimensions a, m and n can be found on the next page.

Dimensions of geared motors

Type	D063			D071			D080		
	a	m	n	a	m	n	a	m	n
K102	∅140	124	36.0	∅140	124	36.0	∅160	128	36.0
K202	∅140	143	46.0	∅140	143	46.0	∅160	147	46.0
K203	∅140	180	46.0	∅140	180	46.0	–	–	–
K302	–	–	–	∅140	163	52.5	∅160	167	52.5
K303	∅140	200	52.5	∅140	200	52.5	∅160	210	16.0
K402	–	–	–	–	–	–	∅160	187	60.0
K403	–	–	–	∅140	220	60.0	∅160	230	23.0
K514	–	–	–	–	–	–	∅160	215	15.0
K614	–	–	–	–	–	–	∅160	234	18.0
K714	–	–	–	–	–	–	∅160	263	20.0

Type	IE3D080			IE3D090			IE3D100			IE3D112			IE3D132			IE3D160			IE3D180			IE3D200		
	a	m	n	a	m	n	a	m	n	a	m	n	a	m	n	a	m	n	a	m	n	a	m	n
K102	∅160	128	36.0	∅160	128	36.0	–	–	–	–	–	–	–	–	–	–	–	–	–	–	–	–	–	–
K202	∅160	147	46.0	∅160	147	46.0	∅200	149	46.0	∅200	149	46.0	–	–	–	–	–	–	–	–	–	–	–	–
K302	∅160	167	52.5	∅160	167	52.5	∅200	169	52.5	∅200	169	52.5	–	–	–	–	–	–	–	–	–	–	–	–
K303	∅160	210	16.0	∅160	210	16.0	–	–	–	–	–	–	–	–	–	–	–	–	–	–	–	–	–	–
K402	∅160	187	60.0	∅160	187	60.0	∅200	189	60.0	∅200	189	60.0	∅250	192	60.0	–	–	–	–	–	–	–	–	–
K403	∅160	230	23.0	∅160	230	23.0	–	–	–	–	–	–	–	–	–	–	–	–	–	–	–	–	–	–
K513	∅160	172	15.0	∅160	172	15.0	∅200	174	15.0	∅200	174	15.0	∅250	177	15.0	–	–	–	–	–	–	–	–	–
K514	∅160	215	15.0	∅160	215	15.0	–	–	–	–	–	–	–	–	–	–	–	–	–	–	–	–	–	–
K613	∅160	191	18.0	∅160	191	18.0	∅200	193	18.0	∅200	193	18.0	∅250	196	18.0	∅300	210	18.0	∅300	210	18.0	–	–	–
K614	∅160	234	18.0	∅160	234	18.0	–	–	–	–	–	–	–	–	–	–	–	–	–	–	–	–	–	–
K713	–	–	–	–	–	–	∅200	221	20.0	∅200	221	20.0	∅250	224	20.0	∅300	237	20.0	∅300	237	20.0	–	–	–
K714	∅160	263	20.0	∅160	263	20.0	∅200	283	20.0	∅200	283	20.0	–	–	–	–	–	–	–	–	–	–	–	–
K813	–	–	–	–	–	–	∅200	247	24.0	∅200	247	24.0	∅250	249	24.0	∅300	262	24.0	∅300	262	24.0	–	–	–
K814	–	–	–	–	–	–	∅200	308	24.0	∅200	308	24.0	∅250	320	5.0	–	–	–	–	–	–	–	–	–
K913	–	–	–	–	–	–	–	–	–	–	–	–	∅250	294	25.0	∅300	307	25.0	∅300	307	25.0	∅350	330	25.0
K914	–	–	–	–	–	–	∅200	353	25.0	∅200	353	25.0	∅250	365	25.0	–	–	–	–	–	–	–	–	–

4.3.6 A shaft design (hollow shaft), NF housing design (base + round flange)

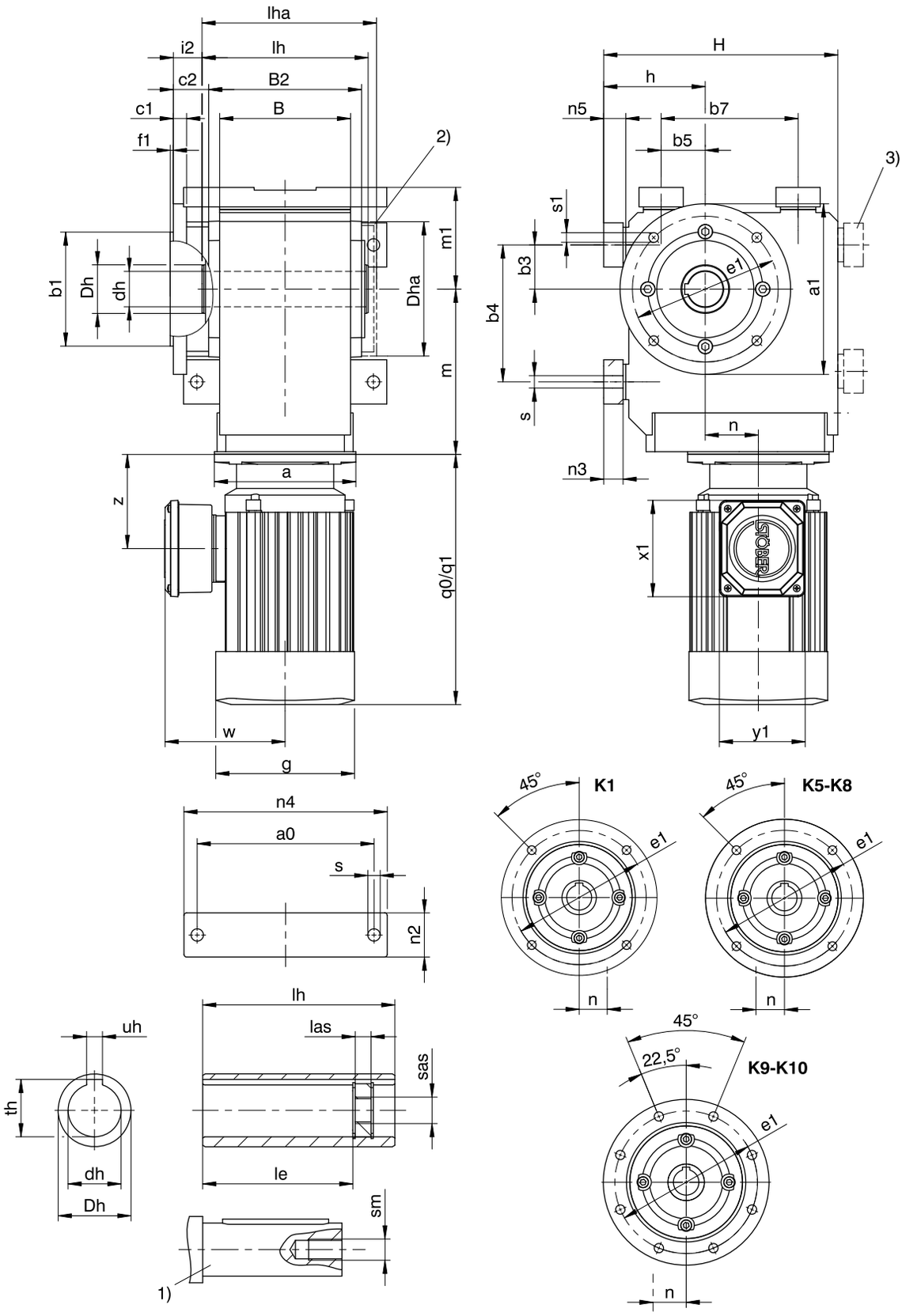

q0	Applies to motors without brake.	q1	Applies to motors with brake.
1)	The length of the machine shaft must be at least 2.2 x ∅dh and the length of the feather key must be at least 2 x ∅dh.	2)	Cover (optional)
3)	Only for K1 (other sizes on request)		

Dimensions of gear units

Type	a0	Øa1	Øb1	b3	b4	b5	b7	B	B2	c1	c2	Ødh	ØDh	Dha	Øe1	f1	h
K1	115	160	110_{j6}	30	90	30	90	90	106	10	32.0	20^{H7}	40	□105	130	3.5	75
K1	115	160	110_{j6}	30	90	30	90	90	106	10	32.0	25^{H7}	40	□105	130	3.5	75
K1	115	160	110_{j6}	30	90	30	90	90	106	10	32.0	30^{H7}	40	□105	130	3.5	75
K3	170	160	110_{j6}	40	130	40	130	130	146	14	38.0	35^{H7}	50	□132	130	3.5	98
K5	200	250	180_{j6}	40	140	100	140	160	185	15	39.5	50^{H7}	65	□145	215	4.0	190
K6	210	300	230_{j6}	50	160	110	160	168	200	17	36.0	50^{H7}	70	∅183	265	4.0	220
K7	241	350	250_{h6}	55	180	125	180	190	226	18	44.0	60^{H7}	85	∅205	300	5.0	250
K8	300	400	300_{h6}	75	240	165	240	235	282	20	45.0	70^{H7}	100	∅184	350	5.0	310
K9	360	450	350_{h6}	95	280	185	280	285	330	23	50.0	90^{H7}	120	∅230	400	5.0	365
K10	330	550	450_{h6}	115	350	265	420	400	356	25	78.0	100^{H7}	130	∅200	500	5.0	420

Dimensions of gear units

Type	H	i2	las	le	lh	lha	m1	n2	n3	n4	n5	Øs	Øs1	sm	sas	th	uh
K1	175	25.0	12	98.0	120	127.0	75	30	13	140	15	9.0	9	M10	M12	28.3	8^{JS9}
K1	175	25.0	12	98.0	120	127.0	75	30	13	140	15	9.0	9	M6	M8	22.8	6^{JS9}
K1	175	25.0	12	93.5	120	127.0	75	30	13	140	15	9.0	9	M10	M12	32.0	8^{JS9}
K3	236	31.0	12	125.0	160	168.0	98	45	20	200	23	11.0	9	M12	M16	38.3	10^{JS9}
K5	290	32.0	12	164.0	200	209.5	130	60	27	240	30	18.0	14	M16	M20	53.8	14^{JS9}
K6	340	28.5	12	179.0	215	224.5	150	65	27	250	30	18.5	14	M16	M20	53.8	14^{JS9}
K7	380	36.0	12	214.0	242	252.0	163	70	35	290	38	23.0	18	M20	M24	64.4	18^{JS9}
K8	455	36.0	20	263.0	300	311.0	190	85	41	360	45	27.0	18	M20	M24	74.9	20^{JS9}
K9	545	40.0	26	302.0	350	361.0	230	95	46	430	50	31.0	18	M24	M30	95.4	25^{JS9}
K10	636	51.0	26	361.0	410	441.0	270	120	–	400	45	39.0	18	M24	M30	106.4	28^{JS9}

Dimensions of additional round flanges

Type	Øa1	Øb1	c1	Øe1	f1	Øs1
K1	140	95_{j6}	10	115	3	9
K8	350	250_{h6}	18	300	5	18
K8	450	350_{h6}	20	400	5	18

Dimensions of motors

Type	g	q0	q1	w	x1	y1	z
D063K04	109	179	231	115	109.0	97.0	81.0
D063M04	109	179	231	115	109.0	97.0	81.0
D071K04	124	208	260	120	109.0	97.0	94.0
D071K02	124	208	260	120	109.0	97.0	94.0
D071L04	124	208	260	120	109.0	97.0	94.0
D071L02	124	208	260	120	109.0	97.0	94.0
D080K04	139	238	295	128	109.0	97.0	97.0

All other dimensions can be found on the next page.

Type	g	q0	q1	w	x1	y1	z
IE3D080K02	139	238	295	128	109.0	97.0	97.0
IE3D080L04	157	283	351	137	109.0	97.0	107.0
IE3D080LX02	157	283	351	137	109.0	97.0	107.0
IE3D090S04	177	310	380	146	120.0	109.0	114.0
IE3D090S02	157	283	351	137	120.0	109.0	107.0
IE3D090LX04	177	365	435	146	120.0	109.0	114.0
IE3D090L02	177	310	380	146	120.0	109.0	114.0
IE3D100KX04	196	404	491	155	120.0	109.0	120.0
IE3D100L02	196	340	427	155	120.0	109.0	120.0
IE3D100LX04	196	444	531	155	120.0	109.0	120.0
IE3D112M02	196	374	461	155	120.0	109.0	120.0
IE3D112M04	217	424	521	178	146.5	156.5	134.0
IE3D132S04	258	476	591	199	146.5	156.5	141.5
IE3D132M04	258	526	641	199	146.5	156.5	141.5
IE3D160M04	313	461	589	242	166.5	193.5	138.0
IE3D160L04	313	549	677	242	166.5	193.5	138.0
IE3D180M04	351	601	748	260	166.5	193.5	178.0
IE3D180L04	351	651	798	260	166.5	193.5	178.0
IE3D200L04	390	729	878	298	207.0	209.0	242.0
IE3D225S04	390	706	855	300	207.0	209.0	169.0
IE3D225M04	440	838	986	324	207.0	209.0	242.0

Dimensions of geared motors

Type	D063			D071			D080		
	a	m	n	a	m	n	a	m	n
K102	∅140	124	36.0	∅140	124	36.0	∅160	128	36.0
K302	–	–	–	∅140	163	52.5	∅160	167	52.5
K303	∅140	200	52.5	∅140	200	52.5	∅160	210	16.0
K514	–	–	–	–	–	–	∅160	215	15.0
K614	–	–	–	–	–	–	∅160	234	18.0
K714	–	–	–	–	–	–	∅160	263	20.0

Type	IE3D080			IE3D090			IE3D100			IE3D112			IE3D132			IE3D160			IE3D180			IE3D200			IE3D225		
	a	m	n	a	m	n	a	m	n	a	m	n	a	m	n	a	m	n	a	m	n	a	m	n	a	m	n
K102	∅160	128	36.0	∅160	128	36.0	–	–	–	–	–	–	–	–	–	–	–	–	–	–	–	–	–	–	–	–	–
K302	∅160	167	52.5	∅160	167	52.5	∅200	169	52.5	∅200	169	52.5	–	–	–	–	–	–	–	–	–	–	–	–	–	–	–
K303	∅160	210	16.0	∅160	210	16.0	–	–	–	–	–	–	–	–	–	–	–	–	–	–	–	–	–	–	–	–	–
K513	∅160	172	15.0	∅160	172	15.0	∅200	174	15.0	∅200	174	15.0	∅250	177	15.0	–	–	–	–	–	–	–	–	–	–	–	–
K514	∅160	215	15.0	∅160	215	15.0	–	–	–	–	–	–	–	–	–	–	–	–	–	–	–	–	–	–	–	–	–
K613	∅160	191	18.0	∅160	191	18.0	∅200	193	18.0	∅200	193	18.0	∅250	196	18.0	∅300	210	18.0	∅300	210	18.0	–	–	–	–	–	–
K614	∅160	234	18.0	∅160	234	18.0	–	–	–	–	–	–	–	–	–	–	–	–	–	–	–	–	–	–	–	–	–
K713	–	–	–	–	–	–	∅200	221	20.0	∅200	221	20.0	∅250	224	20.0	∅300	237	20.0	∅300	237	20.0	–	–	–	–	–	–
K714	∅160	263	20.0	∅160	263	20.0	∅200	283	20.0	∅200	283	20.0	–	–	–	–	–	–	–	–	–	–	–	–	–	–	–
K813	–	–	–	–	–	–	∅200	247	24.0	∅200	247	24.0	∅250	249	24.0	∅300	262	24.0	∅300	262	24.0	–	–	–	–	–	–
K814	–	–	–	–	–	–	∅200	308	24.0	∅200	308	24.0	∅250	320	5.0	–	–	–	–	–	–	–	–	–	–	–	–
K913	–	–	–	–	–	–	–	–	–	–	–	–	∅250	294	25.0	∅300	307	25.0	∅300	307	25.0	∅350	330	25.0	–	–	–
K914	–	–	–	–	–	–	∅200	353	25.0	∅200	353	25.0	∅250	365	25.0	–	–	–	–	–	–	–	–	–	–	–	–
K1013	–	–	–	–	–	–	–	–	–	–	–	–	–	–	–	∅300	392	28.0	∅300	392	28.0	∅350	415	28.0	∅400	415	28.0
K1014	–	–	–	–	–	–	–	–	–	–	–	–	∅250	450	28.0	∅300	475	28.0	∅300	475	28.0	–	–	–	–	–	–

4.3.7 S shaft design (hollow shaft with shrink disk), G housing design (pitch circle diameter)

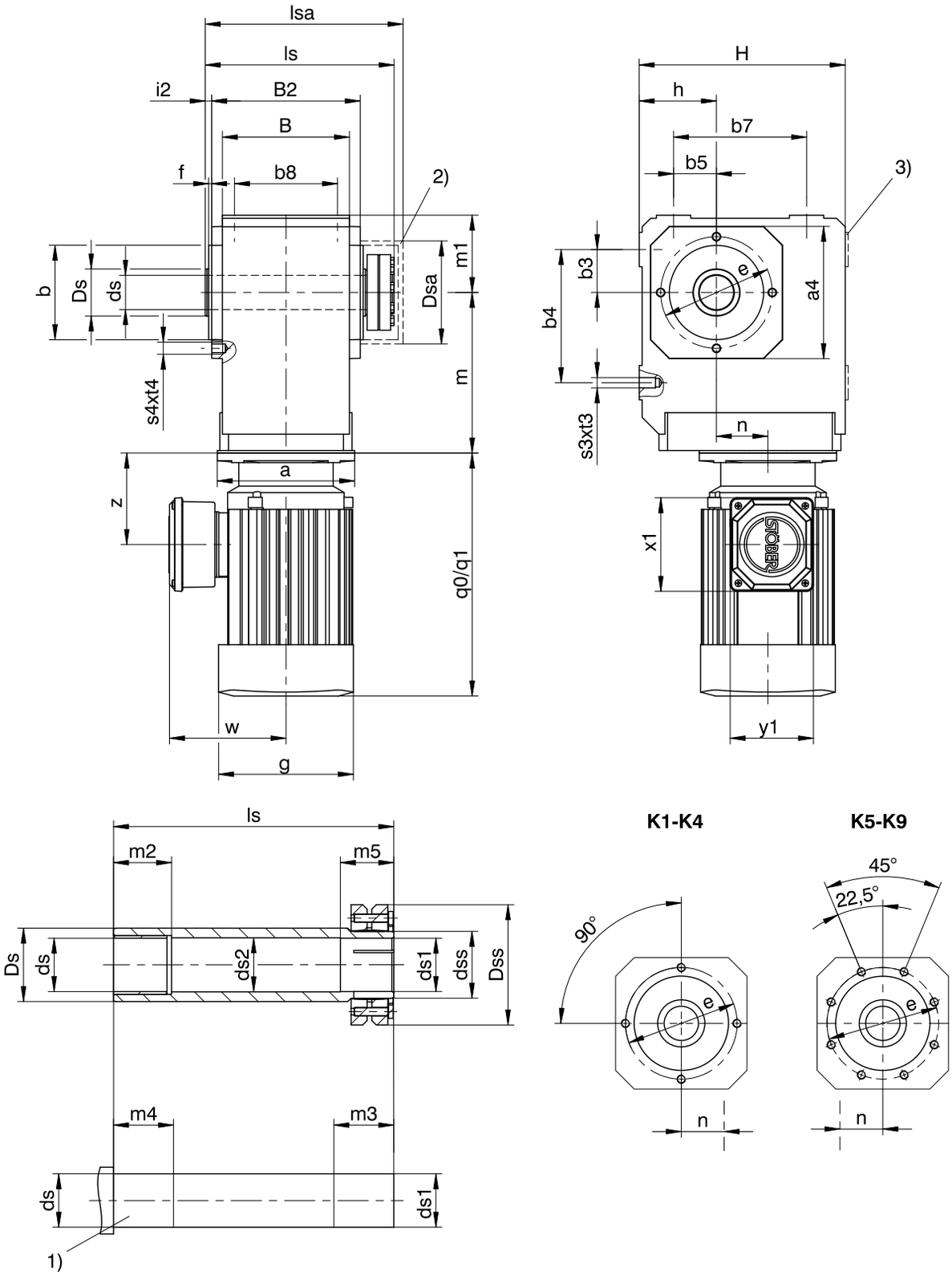

q0	Applies to motors without brake.	q1	Applies to motors with brake.
1)	Machine shaft: The dimension ls must meet or exceed the specified value.	2)	Cover (optional)
3)	Only for K1 (other sizes on request)		

Dimensions of gear units

Type	□a4	Øb	b3	b4	b5	b7	b8	B	B2	Ød	Ød1	Ød2	Ødss	ØD	ØDsa	ØDss	Øe	f	h	H	i2	ls	lsa	m1	m2	m3	m4	m5	s3	s4	t3	t4
K1	105	75_{j6}	30	90	30	90	70	90	106	25_{h9}	25_{h9}^{H7}	25.5	30	40	80	60	90	3.0	60	160	7.0	149	163	60	20	34	25	29	M8	M8	13	13
K2	116	82_{j6}	35	115	35	115	90	115	134	30_{h9}	30_{h9}^{H7}	30.5	36	45	88	72	100	3.0	65	190	7.0	178	193	65	25	39	30	34	M10	M8	16	13
K3	132	95_{j6}	40	130	40	130	105	130	146	35_{h9}	35_{h9}^{H7}	35.5	44	50	101	80	115	3.0	75	213	7.0	190	206	75	30	39	35	34	M10	M8	16	13
K4	152	110_{j6}	50	155	50	155	120	148	173	40_{h9}	40_{h9}^{H7}	40.5	50	55	114	88	130	3.5	90	240	7.5	220	243	90	40	39	45	34	M12	M10	19	16
K5	145	110_{j6}	40	140	100	140	125	160	185	50_{h9}	50_{h9}^{H7}	50.5	62	65	116	106	130	3.5	160	260	7.5	237	254	100	40	44	45	39	M16	M10	26	16
K6	180	140_{j6}	50	160	110	160	130	168	200	50_{h9}	50_{h9}^{H7}	50.5	62	70	128	106	165	3.5	190	310	7.5	254	276	120	40	45	45	40	M16	M10	26	16
K7	195	155_{h6}	55	180	125	180	145	190	226	60_{h6}	60_{h6}^{H7}	62.0	75	85	161.5	138	185	3.5	212	342	8.0	278	314	125	40	45	45	40	M20	M12	33	19
K8	226	185_{h6}	75	240	165	240	185	235	282	70_{h6}	70_{h6}^{H7}	72.0	90	100	193	155	215	4.0	265	410	9.0	352	378	145	50	60	60	50	M24	M12	38	19
K9	280	230_{h6}	95	280	185	280	225	285	330	90_{h6}	90_{h6}^{H7}	92.0	120	120	244	200	265	5.0	315	495	10.0	418	428	180	60	70	70	60	M30	M16	48	26

Dimensions of motors

Type	g	q0	q1	w	x1	y1	z
D063K04	109	179	231	115	109.0	97.0	81.0
D063M04	109	179	231	115	109.0	97.0	81.0
D071K04	124	208	260	120	109.0	97.0	94.0
D071K02	124	208	260	120	109.0	97.0	94.0
D071L04	124	208	260	120	109.0	97.0	94.0
D071L02	124	208	260	120	109.0	97.0	94.0
D080K04	139	238	295	128	109.0	97.0	97.0

Type	g	q0	q1	w	x1	y1	z
IE3D080K02	139	238	295	128	109.0	97.0	97.0
IE3D080L04	157	283	351	137	109.0	97.0	107.0
IE3D080LX02	157	283	351	137	109.0	97.0	107.0
IE3D090S04	177	310	380	146	120.0	109.0	114.0
IE3D090S02	157	283	351	137	120.0	109.0	107.0
IE3D090LX04	177	365	435	146	120.0	109.0	114.0
IE3D090L02	177	310	380	146	120.0	109.0	114.0
IE3D100KX04	196	404	491	155	120.0	109.0	120.0
IE3D100L02	196	340	427	155	120.0	109.0	120.0
IE3D100LX04	196	444	531	155	120.0	109.0	120.0
IE3D112M02	196	374	461	155	120.0	109.0	120.0
IE3D112M04	217	424	521	178	146.5	156.5	134.0
IE3D132S04	258	476	591	199	146.5	156.5	141.5
IE3D132M04	258	526	641	199	146.5	156.5	141.5
IE3D160M04	313	461	589	242	166.5	193.5	138.0
IE3D160L04	313	549	677	242	166.5	193.5	138.0
IE3D180M04	351	601	748	260	166.5	193.5	178.0
IE3D180L04	351	651	798	260	166.5	193.5	178.0
IE3D200L04	390	729	878	298	207.0	209.0	242.0

The dimensions a, m and n can be found on the next page.

Dimensions of geared motors

Type	D063			D071			D080		
	a	m	n	a	m	n	a	m	n
K102	∅140	124	36.0	∅140	124	36.0	∅160	128	36.0
K202	∅140	143	46.0	∅140	143	46.0	∅160	147	46.0
K203	∅140	180	46.0	∅140	180	46.0	–	–	–
K302	–	–	–	∅140	163	52.5	∅160	167	52.5
K303	∅140	200	52.5	∅140	200	52.5	∅160	210	16.0
K402	–	–	–	–	–	–	∅160	187	60.0
K403	–	–	–	∅140	220	60.0	∅160	230	23.0
K514	–	–	–	–	–	–	∅160	215	15.0
K614	–	–	–	–	–	–	∅160	234	18.0
K714	–	–	–	–	–	–	∅160	263	20.0

Type	IE3D080			IE3D090			IE3D100			IE3D112			IE3D132			IE3D160			IE3D180			IE3D200		
	a	m	n	a	m	n	a	m	n	a	m	n	a	m	n	a	m	n	a	m	n	a	m	n
K102	∅160	128	36.0	∅160	128	36.0	–	–	–	–	–	–	–	–	–	–	–	–	–	–	–	–	–	–
K202	∅160	147	46.0	∅160	147	46.0	∅200	149	46.0	∅200	149	46.0	–	–	–	–	–	–	–	–	–	–	–	–
K302	∅160	167	52.5	∅160	167	52.5	∅200	169	52.5	∅200	169	52.5	–	–	–	–	–	–	–	–	–	–	–	–
K303	∅160	210	16.0	∅160	210	16.0	–	–	–	–	–	–	–	–	–	–	–	–	–	–	–	–	–	–
K402	∅160	187	60.0	∅160	187	60.0	∅200	189	60.0	∅200	189	60.0	∅250	192	60.0	–	–	–	–	–	–	–	–	–
K403	∅160	230	23.0	∅160	230	23.0	–	–	–	–	–	–	–	–	–	–	–	–	–	–	–	–	–	–
K513	∅160	172	15.0	∅160	172	15.0	∅200	174	15.0	∅200	174	15.0	∅250	177	15.0	–	–	–	–	–	–	–	–	–
K514	∅160	215	15.0	∅160	215	15.0	–	–	–	–	–	–	–	–	–	–	–	–	–	–	–	–	–	–
K613	∅160	191	18.0	∅160	191	18.0	∅200	193	18.0	∅200	193	18.0	∅250	196	18.0	∅300	210	18.0	∅300	210	18.0	–	–	–
K614	∅160	234	18.0	∅160	234	18.0	–	–	–	–	–	–	–	–	–	–	–	–	–	–	–	–	–	–
K713	–	–	–	–	–	–	∅200	221	20.0	∅200	221	20.0	∅250	224	20.0	∅300	237	20.0	∅300	237	20.0	–	–	–
K714	∅160	263	20.0	∅160	263	20.0	∅200	283	20.0	∅200	283	20.0	–	–	–	–	–	–	–	–	–	–	–	–
K813	–	–	–	–	–	–	∅200	247	24.0	∅200	247	24.0	∅250	249	24.0	∅300	262	24.0	∅300	262	24.0	–	–	–
K814	–	–	–	–	–	–	∅200	308	24.0	∅200	308	24.0	∅250	320	5.0	–	–	–	–	–	–	–	–	–
K913	–	–	–	–	–	–	–	–	–	–	–	–	∅250	294	25.0	∅300	307	25.0	∅300	307	25.0	∅350	330	25.0
K914	–	–	–	–	–	–	∅200	353	25.0	∅200	353	25.0	∅250	365	25.0	–	–	–	–	–	–	–	–	–

4.3.8 S shaft design (hollow shaft with shrink disk), NG housing design (base + pitch circle diameter)

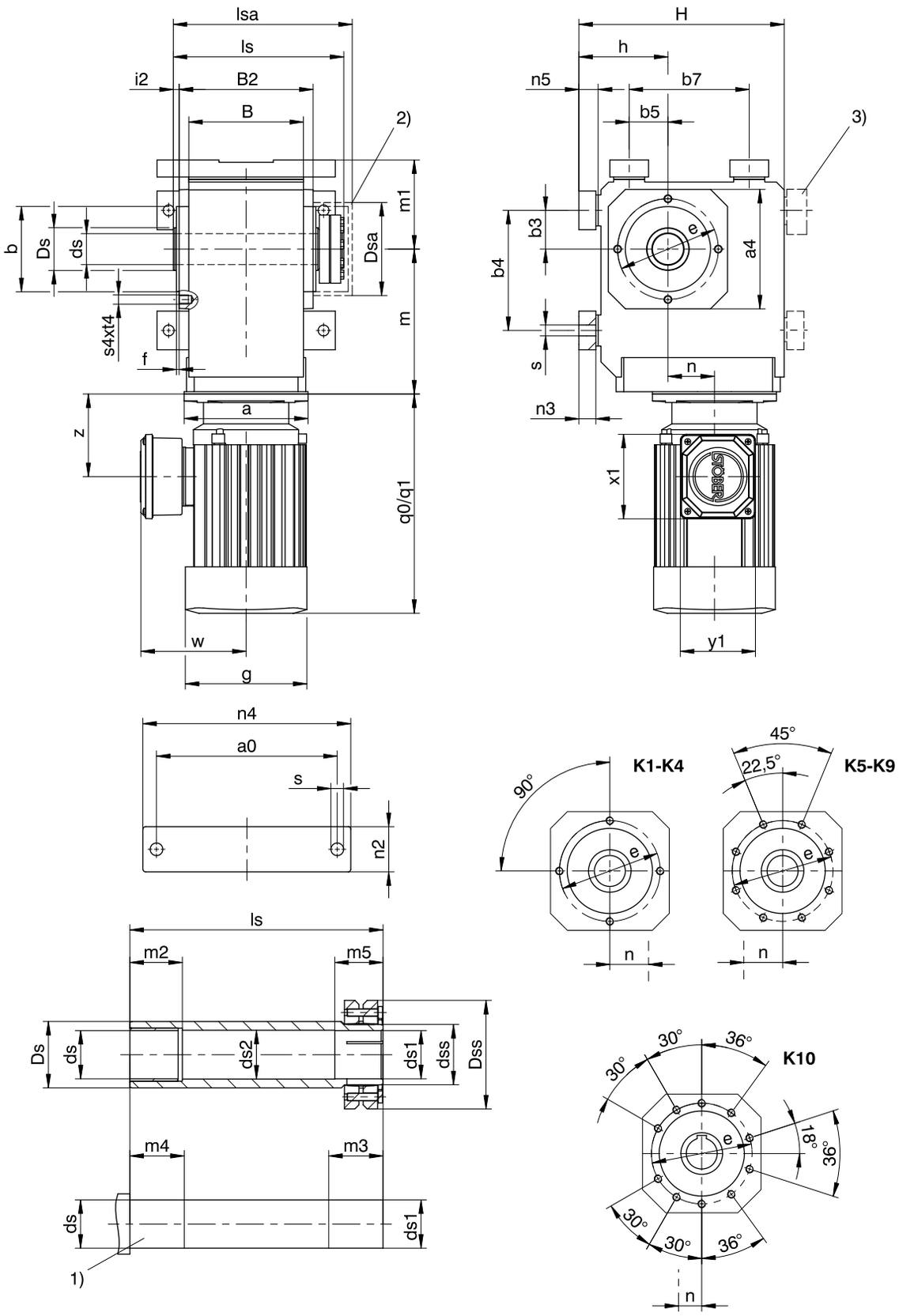

q0	Applies to motors without brake.	q1	Applies to motors with brake.
1)	Machine shaft: The dimension ls must meet or exceed the specified value.	2)	Cover (optional)
3)	Only for K1 (other sizes on request)		

Dimensions of gear units

Type	a0	a4	Øb	b3	b4	b5	b7	B	B2	Ød$_s$	Ød$_{s1}$	Ød$_{s2}$	Ød$_{ss}$	ØD$_s$	ØD$_{sa}$
K1	115	105	75_{j6}	30	90	30	90	90	106	25_{h9}	25_{h9}^{H7}	25.5	30	40	80
K2	155	116	82_{j6}	35	115	35	115	115	134	30_{h9}	30_{h9}^{H7}	30.5	36	45	88
K3	170	132	95_{j6}	40	130	40	130	130	146	35_{h9}	35_{h9}^{H7}	35.5	44	50	101
K4	200	152	110_{j6}	50	155	50	155	148	173	40_{h9}	40_{h9}^{H7}	40.5	50	55	114
K5	200	145	110_{j6}	40	140	100	140	160	185	50_{h9}	50_{h9}^{H7}	50.5	62	65	116
K6	210	180	140_{j6}	50	160	110	160	168	200	50_{h9}	50_{h9}^{H7}	50.5	62	70	128
K7	241	195	155_{j6}	55	180	125	180	190	226	60_{h6}	60_{h6}^{H7}	62.0	75	85	161.5
K8	300	226	185_{j6}	75	240	165	240	235	282	70_{h6}	70_{h6}^{H7}	72.0	90	100	193
K9	360	280	230_{j6}	95	280	185	280	285	330	90_{h6}	90_{h6}^{H7}	92.0	120	120	244
K10	330	340	250_{h6}	115	350	265	420	400	356	100_{h6}	100_{h6}^{H7}	102.0	130	130	274

Dimensions of gear units

Type	ØDss	Øe	f	h	H	i2	ls	lsa	m1	m2	m3	m4	m5	n2	n3	n4	n5	Øs	s4	t4
K1	60	90	3.0	75	175	7.0	149	163	75	20	34	25	29	30	13	140	15	9.0	M8	13
K2	72	100	3.0	88	213	7.0	178	193	88	25	39	30	34	40	20	185	23	11.0	M8	13
K3	80	115	3.0	98	236	7.0	190	206	98	30	39	35	34	45	20	200	23	11.0	M8	13
K4	88	130	3.5	115	265	7.5	220	243	115	40	39	45	34	50	22	230	25	14.0	M10	16
K5	106	130	3.5	190	290	7.5	237	254	130	40	44	45	39	60	27	240	30	18.0	M10	16
K6	106	165	3.5	220	340	7.5	254	276	150	40	45	45	40	65	27	250	30	18.5	M10	16
K7	138	185	3.5	250	380	8.0	278	314	163	40	45	45	40	70	35	290	38	23.0	M12	19
K8	155	215	4.0	310	455	9.0	352	378	190	50	60	60	50	85	41	360	45	27.0	M12	19
K9	200	265	5.0	365	545	10.0	418	428	230	60	70	70	60	95	46	430	50	31.0	M16	26
K10	215	300	20.0	420	636	27.0	483	497	270	60	80	70	70	120	–	400	45	39.0	M20	33

Dimensions of motors

Type	g	q0	q1	w	x1	y1	z
D063K04	109	179	231	115	109.0	97.0	81.0
D063M04	109	179	231	115	109.0	97.0	81.0
D071K04	124	208	260	120	109.0	97.0	94.0
D071K02	124	208	260	120	109.0	97.0	94.0
D071L04	124	208	260	120	109.0	97.0	94.0
D071L02	124	208	260	120	109.0	97.0	94.0
D080K04	139	238	295	128	109.0	97.0	97.0

Type	g	q0	q1	w	x1	y1	z
IE3D080K02	139	238	295	128	109.0	97.0	97.0
IE3D080L04	157	283	351	137	109.0	97.0	107.0
IE3D080LX02	157	283	351	137	109.0	97.0	107.0
IE3D090S04	177	310	380	146	120.0	109.0	114.0
IE3D090S02	157	283	351	137	120.0	109.0	107.0
IE3D090LX04	177	365	435	146	120.0	109.0	114.0
IE3D090L02	177	310	380	146	120.0	109.0	114.0
IE3D100KX04	196	404	491	155	120.0	109.0	120.0
IE3D100L02	196	340	427	155	120.0	109.0	120.0
IE3D100LX04	196	444	531	155	120.0	109.0	120.0
IE3D112M02	196	374	461	155	120.0	109.0	120.0
IE3D112M04	217	424	521	178	146.5	156.5	134.0
IE3D132S04	258	476	591	199	146.5	156.5	141.5
IE3D132M04	258	526	641	199	146.5	156.5	141.5
IE3D160M04	313	461	589	242	166.5	193.5	138.0
IE3D160L04	313	549	677	242	166.5	193.5	138.0
IE3D180M04	351	601	748	260	166.5	193.5	178.0
IE3D180L04	351	651	798	260	166.5	193.5	178.0
IE3D200L04	390	729	878	298	207.0	209.0	242.0
IE3D225S04	390	706	855	300	207.0	209.0	169.0
IE3D225M04	440	838	986	324	207.0	209.0	242.0

The dimensions a, m and n can be found on the next page.

Dimensions of geared motors

Type	D063			D071			D080		
	a	m	n	a	m	n	a	m	n
K102	∅140	124	36.0	∅140	124	36.0	∅160	128	36.0
K202	∅140	143	46.0	∅140	143	46.0	∅160	147	46.0
K203	∅140	180	46.0	∅140	180	46.0	–	–	–
K302	–	–	–	∅140	163	52.5	∅160	167	52.5
K303	∅140	200	52.5	∅140	200	52.5	∅160	210	16.0
K402	–	–	–	–	–	–	∅160	187	60.0
K403	–	–	–	∅140	220	60.0	∅160	230	23.0
K514	–	–	–	–	–	–	∅160	215	15.0
K614	–	–	–	–	–	–	∅160	234	18.0
K714	–	–	–	–	–	–	∅160	263	20.0

Type	IE3D080			IE3D090			IE3D100			IE3D112			IE3D132			IE3D160			IE3D180			IE3D200			IE3D225		
	a	m	n	a	m	n	a	m	n	a	m	n	a	m	n	a	m	n	a	m	n	a	m	n	a	m	n
K102	∅160	128	36.0	∅160	128	36.0	–	–	–	–	–	–	–	–	–	–	–	–	–	–	–	–	–	–	–	–	–
K202	∅160	147	46.0	∅160	147	46.0	∅200	149	46.0	∅200	149	46.0	–	–	–	–	–	–	–	–	–	–	–	–	–	–	–
K302	∅160	167	52.5	∅160	167	52.5	∅200	169	52.5	∅200	169	52.5	–	–	–	–	–	–	–	–	–	–	–	–	–	–	–
K303	∅160	210	16.0	∅160	210	16.0	–	–	–	–	–	–	–	–	–	–	–	–	–	–	–	–	–	–	–	–	–
K402	∅160	187	60.0	∅160	187	60.0	∅200	189	60.0	∅200	189	60.0	∅250	192	60.0	–	–	–	–	–	–	–	–	–	–	–	–
K403	∅160	230	23.0	∅160	230	23.0	–	–	–	–	–	–	–	–	–	–	–	–	–	–	–	–	–	–	–	–	–
K513	∅160	172	15.0	∅160	172	15.0	∅200	174	15.0	∅200	174	15.0	∅250	177	15.0	–	–	–	–	–	–	–	–	–	–	–	–
K514	∅160	215	15.0	∅160	215	15.0	–	–	–	–	–	–	–	–	–	–	–	–	–	–	–	–	–	–	–	–	–
K613	∅160	191	18.0	∅160	191	18.0	∅200	193	18.0	∅200	193	18.0	∅250	196	18.0	∅300	210	18.0	∅300	210	18.0	–	–	–	–	–	–
K614	∅160	234	18.0	∅160	234	18.0	–	–	–	–	–	–	–	–	–	–	–	–	–	–	–	–	–	–	–	–	–
K713	–	–	–	–	–	–	∅200	221	20.0	∅200	221	20.0	∅250	224	20.0	∅300	237	20.0	∅300	237	20.0	–	–	–	–	–	–
K714	∅160	263	20.0	∅160	263	20.0	∅200	283	20.0	∅200	283	20.0	–	–	–	–	–	–	–	–	–	–	–	–	–	–	–
K813	–	–	–	–	–	–	∅200	247	24.0	∅200	247	24.0	∅250	249	24.0	∅300	262	24.0	∅300	262	24.0	–	–	–	–	–	–
K814	–	–	–	–	–	–	∅200	308	24.0	∅200	308	24.0	∅250	320	5.0	–	–	–	–	–	–	–	–	–	–	–	–
K913	–	–	–	–	–	–	–	–	–	–	–	–	∅250	294	25.0	∅300	307	25.0	∅300	307	25.0	∅350	330	25.0	–	–	–
K914	–	–	–	–	–	–	∅200	353	25.0	∅200	353	25.0	∅250	365	25.0	–	–	–	–	–	–	–	–	–	–	–	–
K1013	–	–	–	–	–	–	–	–	–	–	–	–	–	–	–	∅300	392	28.0	∅300	392	28.0	∅350	415	28.0	∅400	415	28.0
K1014	–	–	–	–	–	–	–	–	–	–	–	–	∅250	450	28.0	∅300	475	28.0	∅300	475	28.0	–	–	–	–	–	–

4.3.9 S shaft design (hollow shaft with shrink disk), GD housing design (pitch circle diameter + torque arm bracket)

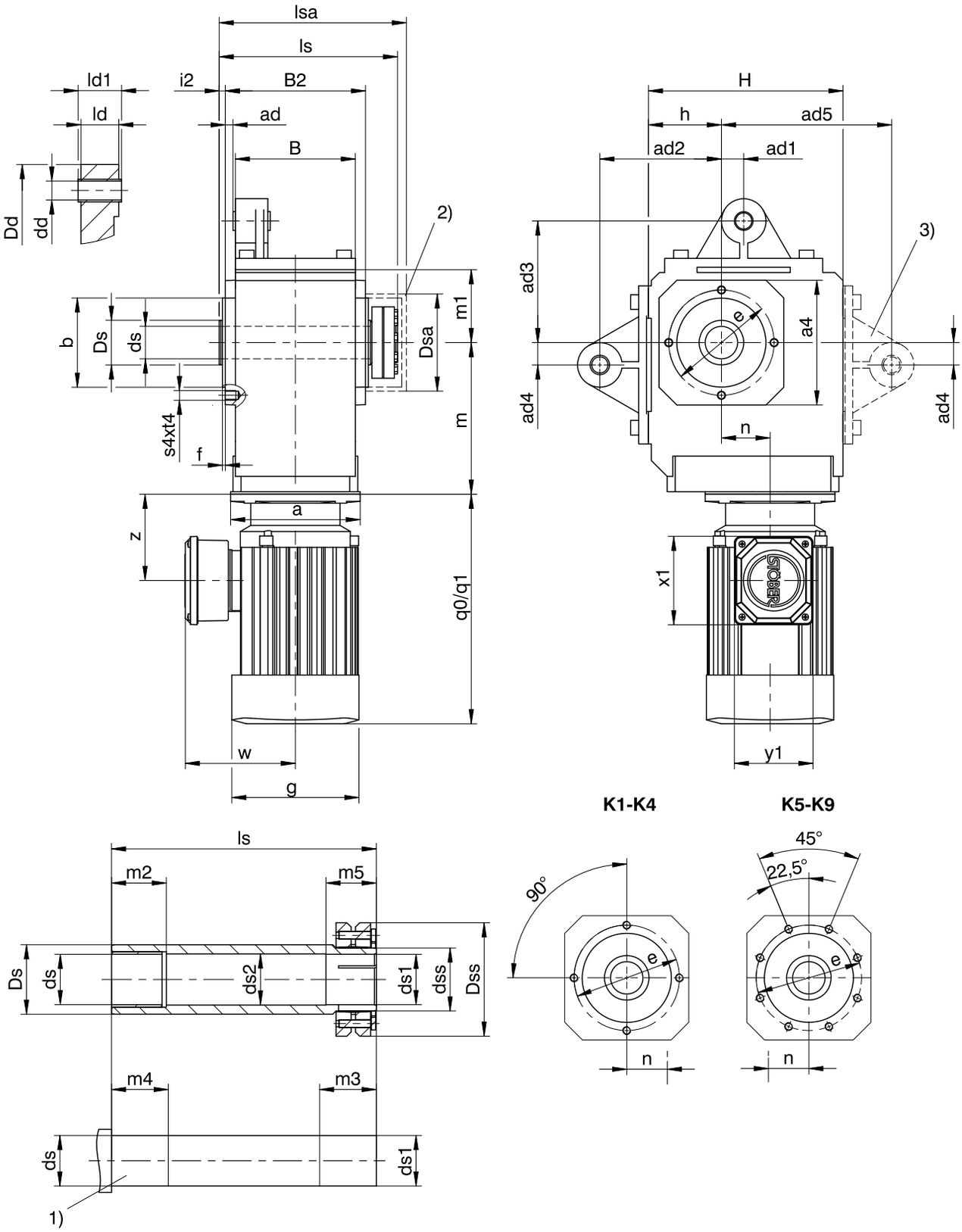

q0	Applies to motors without brake.	q1	Applies to motors with brake.
1)	Machine shaft: The dimension ls must meet or exceed the specified value.	2)	Cover (optional)
3)	Only for K1 (other sizes on request)	–	If you brace the gear units without the factory-adjusted torque arms provided for this purpose, the dimensions for ad2 and ad3 must meet the specified value.

Dimensions of gear units

Type	□a4	ad	ad1	ad2	ad3	ad4	ad5	Øb	B	B2	Ødd	Øds	Øds1	Øds2	Ødss	ØDd	ØDs	ØDsa
K1	105	6.0	15.0	90	90	15.0	130	75_{j6}	90	106	12^{H9}	25_{h9}	$25_{h9}{}^{H7}$	25.5	30	43	40	80
K2	116	6.5	22.5	100	100	22.5	–	82_{j6}	115	134	16^{H9}	30_{h9}	$30_{h9}{}^{H7}$	30.5	36	45	45	88
K3	132	5.0	25.0	120	120	25.0	–	95_{j6}	130	146	16^{H9}	35_{h9}	$35_{h9}{}^{H7}$	35.5	44	45	50	101
K4	152	9.5	27.5	150	150	27.5	–	110_{j6}	148	173	20^{H9}	40_{h9}	$40_{h9}{}^{H7}$	40.5	50	55	55	114
K5	145	9.5	30.0	250	190	30.0	–	110_{j6}	160	185	20^{H9}	50_{h9}	$50_{h9}{}^{H7}$	50.5	62	58	65	116
K6	180	13.0	30.0	250	180	30.0	–	140_{j6}	168	200	20^{H9}	50_{h9}	$50_{h9}{}^{H7}$	50.5	62	58	70	128
K7	195	15.0	35.0	300	213	35.0	–	155_{h6}	190	226	20^{H9}	60_{h6}	$60_{h6}{}^{H7}$	62.0	75	68	85	161.5
K8	226	17.0	45.0	350	230	45.0	–	185_{h6}	235	282	24^{H9}	70_{h6}	$70_{h6}{}^{H7}$	72.0	90	72	100	193
K9	280	16.0	45.0	450	315	45.0	–	230_{h6}	285	330	24^{H9}	90_{h6}	$90_{h6}{}^{H7}$	92.0	120	75	120	244

Dimensions of gear units

Type	ØDss	Øe	f	h	H	i2	ld	ld1	ls	lsa	m1	m2	m3	m4	m5	s4	t4
K1	60	90	3.0	60	160	7.0	24	28	149	163	60	20	34	25	29	M8	13
K2	72	100	3.0	65	190	7.0	32	38	178	193	65	25	39	30	34	M8	13
K3	80	115	3.0	75	213	7.0	32	38	190	206	75	30	39	35	34	M8	13
K4	88	130	3.5	90	240	7.5	40	46	220	243	90	40	39	45	34	M10	16
K5	106	130	3.5	160	260	7.5	40	46	237	254	100	40	44	45	39	M10	16
K6	106	165	3.5	190	310	7.5	40	46	254	276	120	40	45	45	40	M10	16
K7	138	185	3.5	212	342	8.0	64	70	278	314	125	40	45	45	40	M12	19
K8	155	215	4.0	265	410	9.0	102	115	352	378	145	50	60	60	50	M12	19
K9	200	265	5.0	315	495	10.0	102	115	418	428	180	60	70	70	60	M16	26

Dimensions of motors

Type	g	q0	q1	w	x1	y1	z
D063K04	109	179	231	115	109.0	97.0	81.0
D063M04	109	179	231	115	109.0	97.0	81.0
D071K04	124	208	260	120	109.0	97.0	94.0
D071K02	124	208	260	120	109.0	97.0	94.0
D071L04	124	208	260	120	109.0	97.0	94.0
D071L02	124	208	260	120	109.0	97.0	94.0
D080K04	139	238	295	128	109.0	97.0	97.0

Type	g	q0	q1	w	x1	y1	z
IE3D080K02	139	238	295	128	109.0	97.0	97.0
IE3D080L04	157	283	351	137	109.0	97.0	107.0
IE3D080LX02	157	283	351	137	109.0	97.0	107.0
IE3D090S04	177	310	380	146	120.0	109.0	114.0
IE3D090S02	157	283	351	137	120.0	109.0	107.0
IE3D090LX04	177	365	435	146	120.0	109.0	114.0
IE3D090L02	177	310	380	146	120.0	109.0	114.0
IE3D100KX04	196	404	491	155	120.0	109.0	120.0
IE3D100L02	196	340	427	155	120.0	109.0	120.0
IE3D100LX04	196	444	531	155	120.0	109.0	120.0
IE3D112M02	196	374	461	155	120.0	109.0	120.0
IE3D112M04	217	424	521	178	146.5	156.5	134.0
IE3D132S04	258	476	591	199	146.5	156.5	141.5
IE3D132M04	258	526	641	199	146.5	156.5	141.5
IE3D160M04	313	461	589	242	166.5	193.5	138.0
IE3D160L04	313	549	677	242	166.5	193.5	138.0
IE3D180M04	351	601	748	260	166.5	193.5	178.0
IE3D180L04	351	651	798	260	166.5	193.5	178.0
IE3D200L04	390	729	878	298	207.0	209.0	242.0

The dimensions a, m and n can be found on the next page.

Dimensions of geared motors

Type	D063			D071			D080		
	a	m	n	a	m	n	a	m	n
K102	∅140	124	36.0	∅140	124	36.0	∅160	128	36.0
K202	∅140	143	46.0	∅140	143	46.0	∅160	147	46.0
K203	∅140	180	46.0	∅140	180	46.0	–	–	–
K302	–	–	–	∅140	163	52.5	∅160	167	52.5
K303	∅140	200	52.5	∅140	200	52.5	∅160	210	16.0
K402	–	–	–	–	–	–	∅160	187	60.0
K403	–	–	–	∅140	220	60.0	∅160	230	23.0
K514	–	–	–	–	–	–	∅160	215	15.0
K614	–	–	–	–	–	–	∅160	234	18.0
K714	–	–	–	–	–	–	∅160	263	20.0

Type	IE3D080			IE3D090			IE3D100			IE3D112			IE3D132			IE3D160			IE3D180			IE3D200		
	a	m	n	a	m	n	a	m	n	a	m	n	a	m	n	a	m	n	a	m	n	a	m	n
K102	∅160	128	36.0	∅160	128	36.0	–	–	–	–	–	–	–	–	–	–	–	–	–	–	–	–	–	–
K202	∅160	147	46.0	∅160	147	46.0	∅200	149	46.0	∅200	149	46.0	–	–	–	–	–	–	–	–	–	–	–	–
K302	∅160	167	52.5	∅160	167	52.5	∅200	169	52.5	∅200	169	52.5	–	–	–	–	–	–	–	–	–	–	–	–
K303	∅160	210	16.0	∅160	210	16.0	–	–	–	–	–	–	–	–	–	–	–	–	–	–	–	–	–	–
K402	∅160	187	60.0	∅160	187	60.0	∅200	189	60.0	∅200	189	60.0	∅250	192	60.0	–	–	–	–	–	–	–	–	–
K403	∅160	230	23.0	∅160	230	23.0	–	–	–	–	–	–	–	–	–	–	–	–	–	–	–	–	–	–
K513	∅160	172	15.0	∅160	172	15.0	∅200	174	15.0	∅200	174	15.0	∅250	177	15.0	–	–	–	–	–	–	–	–	–
K514	∅160	215	15.0	∅160	215	15.0	–	–	–	–	–	–	–	–	–	–	–	–	–	–	–	–	–	–
K613	∅160	191	18.0	∅160	191	18.0	∅200	193	18.0	∅200	193	18.0	∅250	196	18.0	∅300	210	18.0	∅300	210	18.0	–	–	–
K614	∅160	234	18.0	∅160	234	18.0	–	–	–	–	–	–	–	–	–	–	–	–	–	–	–	–	–	–
K713	–	–	–	–	–	–	∅200	221	20.0	∅200	221	20.0	∅250	224	20.0	∅300	237	20.0	∅300	237	20.0	–	–	–
K714	∅160	263	20.0	∅160	263	20.0	∅200	283	20.0	∅200	283	20.0	–	–	–	–	–	–	–	–	–	–	–	–
K813	–	–	–	–	–	–	∅200	247	24.0	∅200	247	24.0	∅250	249	24.0	∅300	262	24.0	∅300	262	24.0	–	–	–
K814	–	–	–	–	–	–	∅200	308	24.0	∅200	308	24.0	∅250	320	5.0	–	–	–	–	–	–	–	–	–
K913	–	–	–	–	–	–	–	–	–	–	–	–	∅250	294	25.0	∅300	307	25.0	∅300	307	25.0	∅350	330	25.0
K914	–	–	–	–	–	–	∅200	353	25.0	∅200	353	25.0	∅250	365	25.0	–	–	–	–	–	–	–	–	–

4.3.10 S shaft design (hollow shaft with shrink disk), NGD housing design (foot + pitch circle diameter + torque arm bracket)

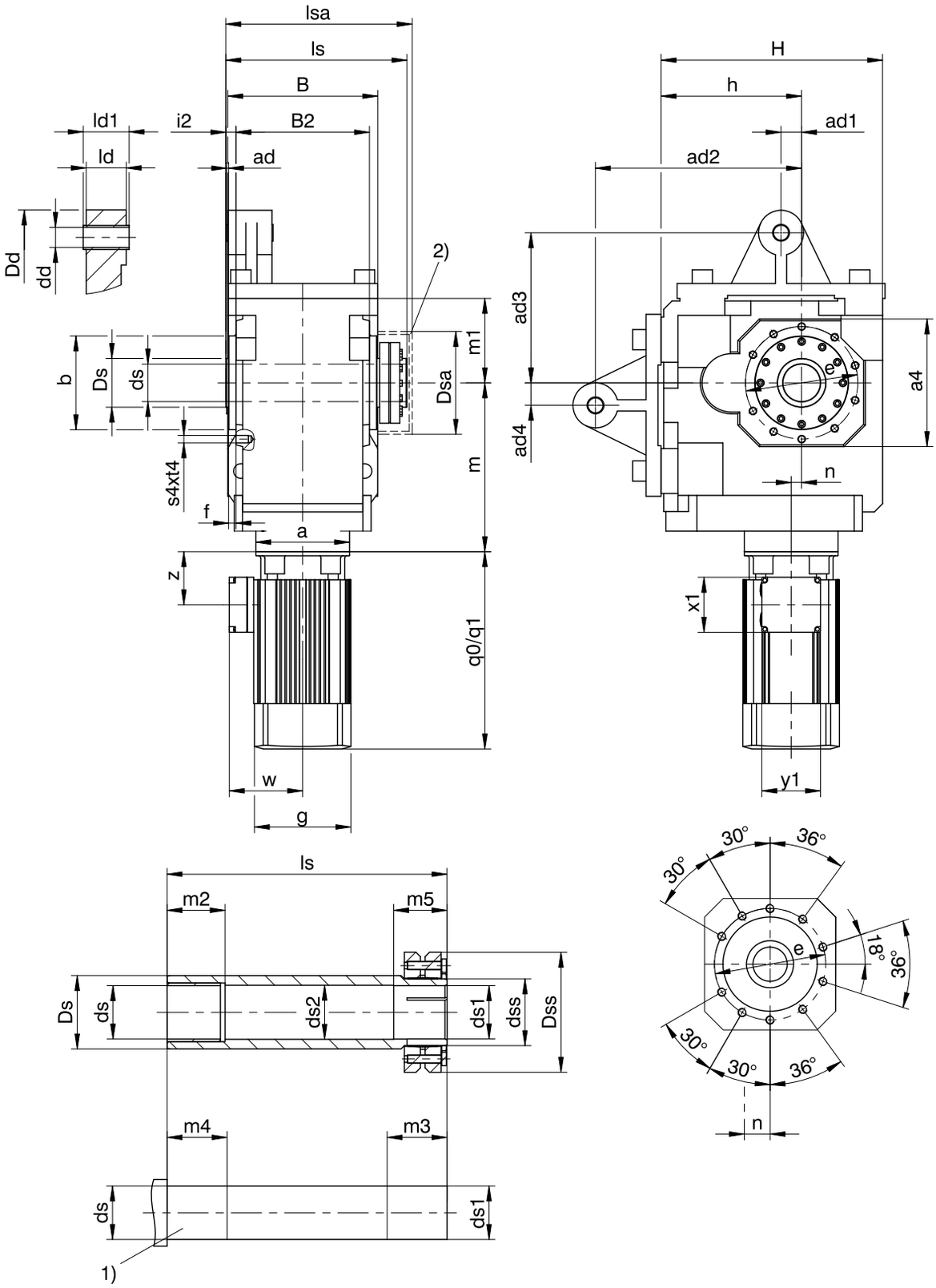

q0	Applies to motors without brake.	q1	Applies to motors with brake.
1)	Machine shaft: The dimension ls must meet or exceed the specified value.	2)	Cover (optional)
–	If you brace the gear units without the factory-adjusted torque arms provided for this purpose, the dimensions for ad2 and ad3 must meet the specified value.		

Dimensions of gear units

Type	□a4	ad	ad1	ad2	ad3	ad4	Øb	B	B2	Ødd	Ød$_s$	Ød$_{s1}$	Ød$_{s2}$	Ød$_{ss}$	ØDd	ØD$_s$	ØD$_{sa}$
K10	340	5	55	550	400	60	250_{h6}	400	356	40^{H9}	100_{h6}	100_{h6}^{H7}	102	130	120	130	274

Dimensions of gear units

Type	ØD$_{ss}$	Øe	f	h	H	i2	ld	ld1	ls	lsa	m1	m2	m3	m4	m5	s4	t4
K10	215	300	20	375	591	27	118	124	483	497	225	60	80	70	70	M20	33

Dimensions of motors

Type	□g	q0	q1	w	x1	y1	z
IE3D132M04	258	526	641	199	146.5	156.5	141.5
IE3D132S04	258	476	591	199	146.5	156.5	141.5
IE3D160L04	313	549	677	242	166.5	193.5	138.0
IE3D160M04	313	461	589	242	166.5	193.5	138.0
IE3D180L04	351	651	798	260	166.5	193.5	178.0
IE3D180M04	351	601	748	260	166.5	193.5	178.0
IE3D200L04	390	729	878	298	207.0	209.0	242.0
IE3D225M04	440	838	986	324	207.0	209.0	242.0
IE3D225S04	390	706	855	300	207.0	209.0	169.0

Dimensions of geared motors

Type	IE3D132			IE3D160			IE3D180			IE3D200			IE3D225		
	a	m	n	a	m	n	a	m	n	a	m	n	a	m	n
K1013	–	–	–	∅300	392	28.0	∅300	392	28.0	∅350	415	28.0	∅400	415	28.0
K1014	∅250	450	28.0	∅300	475	28.0	∅300	475	28.0	–	–	–	–	–	–

4.3.11 S shaft design (hollow shaft with shrink disk), F housing design (round flange)

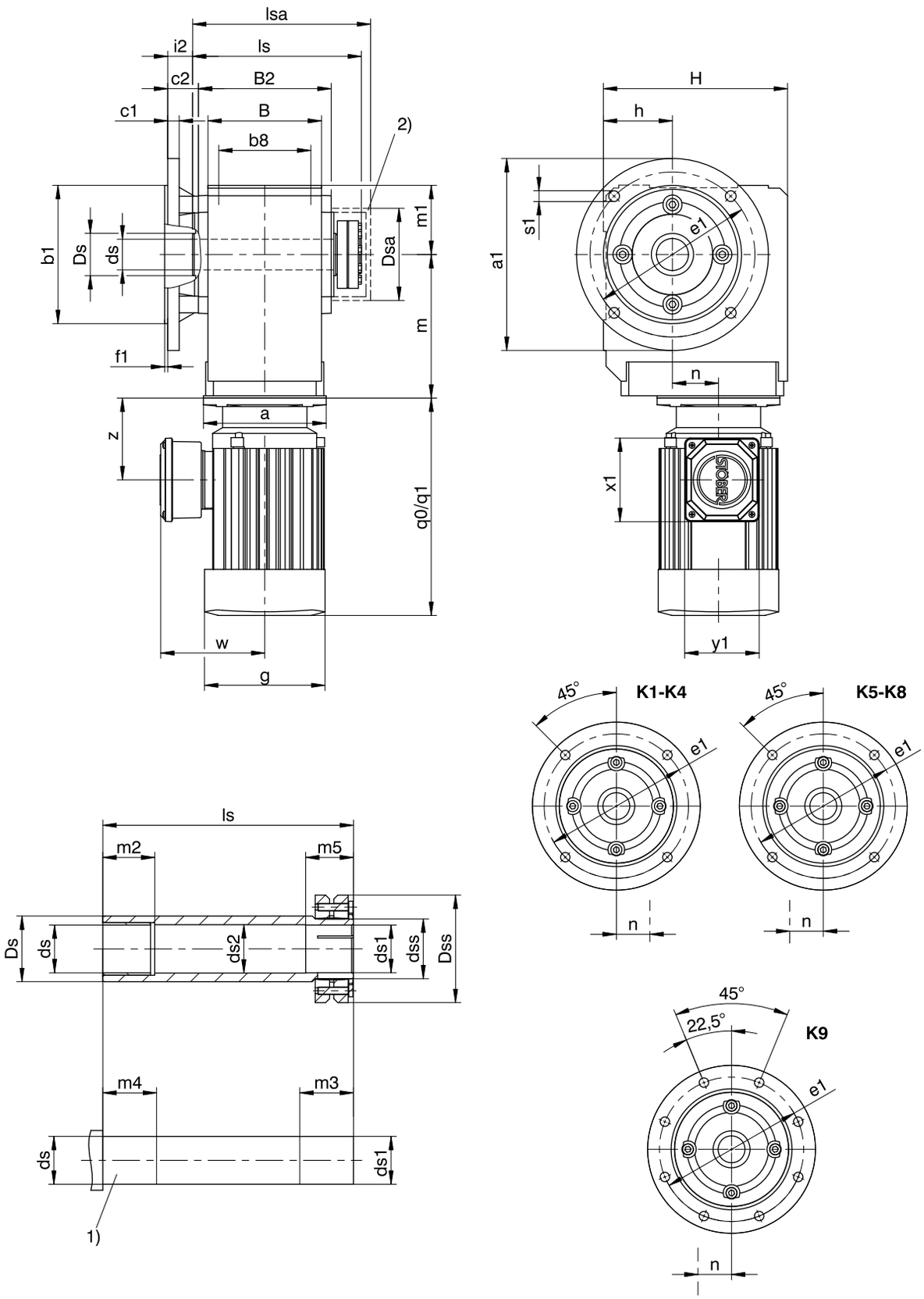

q0	Applies to motors without brake.	q1	Applies to motors with brake.
1)	Machine shaft: The dimension ls must meet or exceed the specified value.	2)	Cover (optional)

Dimensions of gear units

Type	Øa1	Øb1	b8	B	B2	c1	c2	Øds	Øds1	Øds2	Ødss	ØDs	ØDsa	ØDss	Øe1	f1	h	H	i2	ls	lsa	m1	m2	m3	m4	m5	Øs1
K1	160	110_{j6}	70	90	106	10	32.0	25_{h9}	25_{h9}^{H7}	25.5	30	40	80	60	130	3.5	60	160	25.0	149	163	60	20	34	25	29	9
K2	200	130_{j6}	90	115	134	12	32.0	30_{h9}	30_{h9}^{H7}	30.5	36	45	88	72	165	3.5	65	190	25.0	178	193	65	25	39	30	34	11
K3	200	130_{j6}	105	130	146	14	38.0	35_{h9}	35_{h9}^{H7}	35.5	44	50	101	80	165	3.5	75	213	31.0	190	206	75	30	39	35	34	11
K4	250	180_{j6}	120	148	173	15	40.0	40_{h9}	40_{h9}^{H7}	40.5	50	55	114	88	215	4.0	90	240	32.5	220	243	90	40	39	45	34	14
K5	250	180_{j6}	125	160	185	15	39.5	50_{h9}	50_{h9}^{H7}	50.5	62	65	116	106	215	4.0	160	260	32.0	237	254	100	40	44	45	39	14
K6	300	230_{j6}	130	168	200	17	36.0	50_{h9}	50_{h9}^{H7}	50.5	62	70	128	106	265	4.0	190	310	28.5	254	276	120	40	45	45	40	14
K7	350	250_{h6}	145	190	226	18	44.0	60_{h6}	60_{h6}^{H7}	62.0	75	85	161.5	138	300	5.0	212	342	36.0	278	314	125	40	45	45	40	18
K8	400	300_{h6}	185	235	282	20	45.0	70_{h6}	70_{h6}^{H7}	72.0	90	100	193	155	350	5.0	265	410	36.0	352	378	145	50	60	60	50	18
K9	450	350_{h6}	225	285	330	23	50.0	90_{h6}	90_{h6}^{H7}	92.0	120	120	244	200	400	5.0	315	495	40.0	418	428	180	60	70	70	60	18

Dimensions of additional round flanges

Type	Øa1	Øb1	c1	Øe1	f1	Øs1
K1	140	95_{j6}	10	115	3.0	9
K2	160	110_{j6}	12	130	3.5	9
K3	160	110_{j6}	14	130	3.5	9
K3	250	180_{j6}	14	215	4.0	14
K8	350	250_{h6}	18	300	5.0	18
K8	450	350_{h6}	20	400	5.0	18

Dimensions of motors

Type	g	q0	q1	w	x1	y1	z
D063K04	109	179	231	115	109.0	97.0	81.0
D063M04	109	179	231	115	109.0	97.0	81.0
D071K04	124	208	260	120	109.0	97.0	94.0
D071K02	124	208	260	120	109.0	97.0	94.0
D071L04	124	208	260	120	109.0	97.0	94.0
D071L02	124	208	260	120	109.0	97.0	94.0
D080K04	139	238	295	128	109.0	97.0	97.0

Type	g	q0	q1	w	x1	y1	z
IE3D080K02	139	238	295	128	109.0	97.0	97.0
IE3D080L04	157	283	351	137	109.0	97.0	107.0
IE3D080LX02	157	283	351	137	109.0	97.0	107.0
IE3D090S04	177	310	380	146	120.0	109.0	114.0
IE3D090S02	157	283	351	137	120.0	109.0	107.0
IE3D090LX04	177	365	435	146	120.0	109.0	114.0
IE3D090L02	177	310	380	146	120.0	109.0	114.0
IE3D100KX04	196	404	491	155	120.0	109.0	120.0
IE3D100L02	196	340	427	155	120.0	109.0	120.0
IE3D100LX04	196	444	531	155	120.0	109.0	120.0
IE3D112M02	196	374	461	155	120.0	109.0	120.0
IE3D112M04	217	424	521	178	146.5	156.5	134.0
IE3D132S04	258	476	591	199	146.5	156.5	141.5
IE3D132M04	258	526	641	199	146.5	156.5	141.5
IE3D160M04	313	461	589	242	166.5	193.5	138.0
IE3D160L04	313	549	677	242	166.5	193.5	138.0
IE3D180M04	351	601	748	260	166.5	193.5	178.0
IE3D180L04	351	651	798	260	166.5	193.5	178.0
IE3D200L04	390	729	878	298	207.0	209.0	242.0

The dimensions a, m and n can be found on the next page.

Dimensions of geared motors

Type	D063			D071			D080		
	a	m	n	a	m	n	a	m	n
K102	∅140	124	36.0	∅140	124	36.0	∅160	128	36.0
K202	∅140	143	46.0	∅140	143	46.0	∅160	147	46.0
K203	∅140	180	46.0	∅140	180	46.0	–	–	–
K302	–	–	–	∅140	163	52.5	∅160	167	52.5
K303	∅140	200	52.5	∅140	200	52.5	∅160	210	16.0
K402	–	–	–	–	–	–	∅160	187	60.0
K403	–	–	–	∅140	220	60.0	∅160	230	23.0
K514	–	–	–	–	–	–	∅160	215	15.0
K614	–	–	–	–	–	–	∅160	234	18.0
K714	–	–	–	–	–	–	∅160	263	20.0

Type	IE3D080			IE3D090			IE3D100			IE3D112			IE3D132			IE3D160			IE3D180			IE3D200		
	a	m	n	a	m	n	a	m	n	a	m	n	a	m	n	a	m	n	a	m	n	a	m	n
K102	∅160	128	36.0	∅160	128	36.0	–	–	–	–	–	–	–	–	–	–	–	–	–	–	–	–	–	–
K202	∅160	147	46.0	∅160	147	46.0	∅200	149	46.0	∅200	149	46.0	–	–	–	–	–	–	–	–	–	–	–	–
K302	∅160	167	52.5	∅160	167	52.5	∅200	169	52.5	∅200	169	52.5	–	–	–	–	–	–	–	–	–	–	–	–
K303	∅160	210	16.0	∅160	210	16.0	–	–	–	–	–	–	–	–	–	–	–	–	–	–	–	–	–	–
K402	∅160	187	60.0	∅160	187	60.0	∅200	189	60.0	∅200	189	60.0	∅250	192	60.0	–	–	–	–	–	–	–	–	–
K403	∅160	230	23.0	∅160	230	23.0	–	–	–	–	–	–	–	–	–	–	–	–	–	–	–	–	–	–
K513	∅160	172	15.0	∅160	172	15.0	∅200	174	15.0	∅200	174	15.0	∅250	177	15.0	–	–	–	–	–	–	–	–	–
K514	∅160	215	15.0	∅160	215	15.0	–	–	–	–	–	–	–	–	–	–	–	–	–	–	–	–	–	–
K613	∅160	191	18.0	∅160	191	18.0	∅200	193	18.0	∅200	193	18.0	∅250	196	18.0	∅300	210	18.0	∅300	210	18.0	–	–	–
K614	∅160	234	18.0	∅160	234	18.0	–	–	–	–	–	–	–	–	–	–	–	–	–	–	–	–	–	–
K713	–	–	–	–	–	–	∅200	221	20.0	∅200	221	20.0	∅250	224	20.0	∅300	237	20.0	∅300	237	20.0	–	–	–
K714	∅160	263	20.0	∅160	263	20.0	∅200	283	20.0	∅200	283	20.0	–	–	–	–	–	–	–	–	–	–	–	–
K813	–	–	–	–	–	–	∅200	247	24.0	∅200	247	24.0	∅250	249	24.0	∅300	262	24.0	∅300	262	24.0	–	–	–
K814	–	–	–	–	–	–	∅200	308	24.0	∅200	308	24.0	∅250	320	5.0	–	–	–	–	–	–	–	–	–
K913	–	–	–	–	–	–	–	–	–	–	–	–	∅250	294	25.0	∅300	307	25.0	∅300	307	25.0	∅350	330	25.0
K914	–	–	–	–	–	–	∅200	353	25.0	∅200	353	25.0	∅250	365	25.0	–	–	–	–	–	–	–	–	–

4.3.12 S shaft design (hollow shaft with shrink disk), NF housing design (base + round flange)

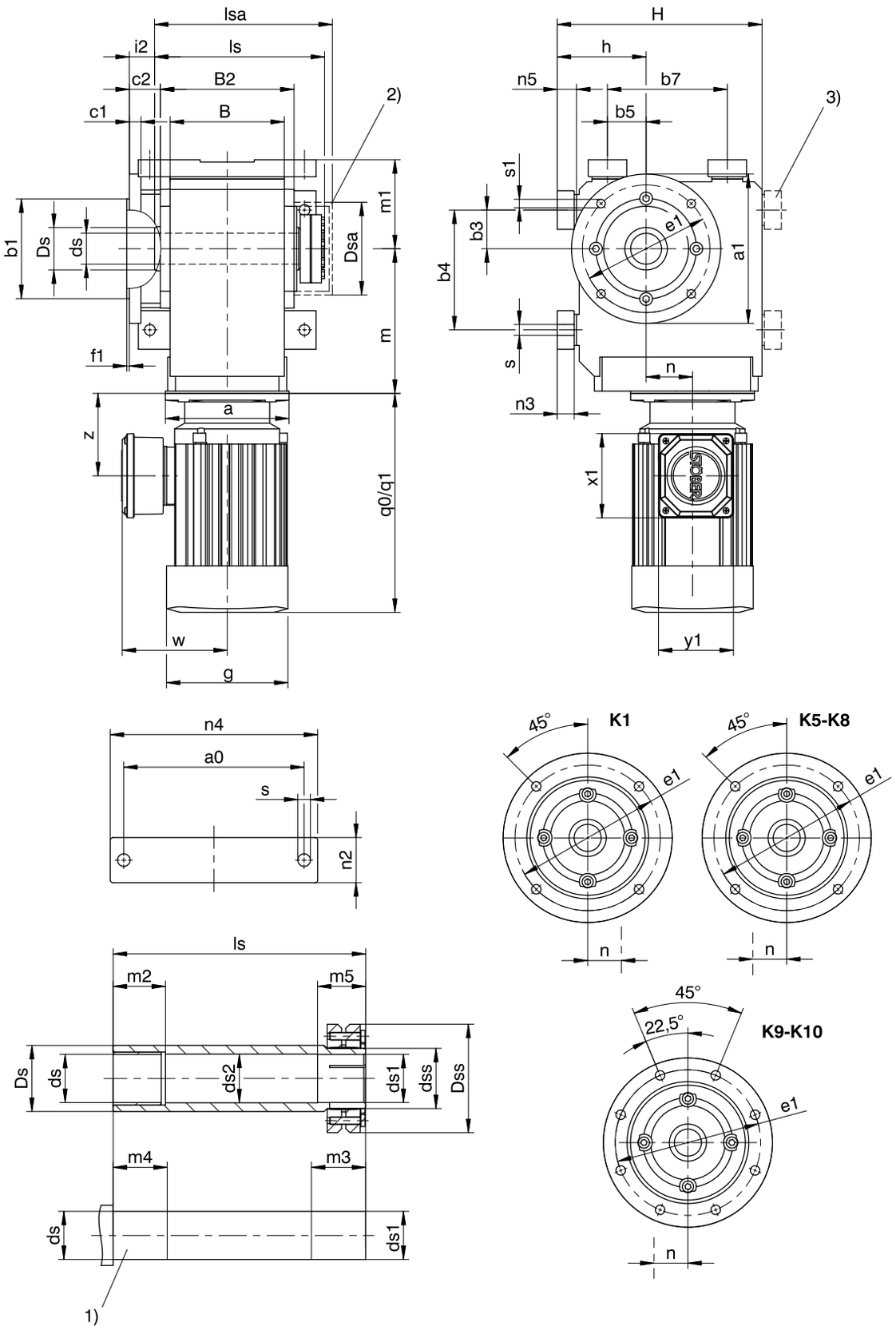

q0	Applies to motors without brake.	q1	Applies to motors with brake.
1)	Machine shaft: The dimension ls must meet or exceed the specified value.	2)	Cover (optional)
3)	Only for K1 (other sizes on request)		

Dimensions of gear units

Type	a0	Øa1	Øb1	b3	b4	b5	b7	B	B2	c1	c2	Ød	Ød1	Ød2	Ødss	ØD	ØDa	ØDss
K1	115	160	110_{j6}	30	90	30	90	90	106	10	32.0	25_{h9}	25_{h9}^{H7}	25.5	30	40	80.0	60
K3	170	160	110_{j6}	40	130	40	130	130	146	14	38.0	35_{h9}	35_{h9}^{H7}	35.5	44	50	101.0	80
K5	200	250	180_{j6}	40	140	100	140	160	185	15	39.5	50_{h9}	50_{h9}^{H7}	50.5	62	65	116.0	106
K6	210	300	230_{j6}	50	160	110	160	168	200	17	36.0	50_{h9}	50_{h9}^{H7}	50.5	62	70	128.0	106
K7	241	350	250_{h6}	55	180	125	180	190	226	18	44.0	60_{h6}	60_{h6}^{H7}	62.0	75	85	161.5	138
K8	300	400	300_{h6}	75	240	165	240	235	282	20	45.0	70_{h6}	70_{h6}^{H7}	72.0	90	100	193.0	155
K9	360	450	350_{h6}	95	280	185	280	285	330	23	50.0	90_{h6}	90_{h6}^{H7}	92.0	120	120	244.0	200
K10	330	550	450_{h6}	115	350	265	420	400	356	25	78.0	100_{h6}	100_{h6}^{H7}	102.0	130	130	274.0	215

Dimensions of gear units

Type	Øe1	f1	h	H	i2	ls	lsa	m1	m2	m3	m4	m5	n2	n3	n4	n5	Øs	Øs1
K1	130	3.5	75	175	25.0	149	163	75	20	34	25	29	30	13	140	15	9.0	9
K3	130	3.5	98	236	31.0	190	206	98	30	39	35	34	45	20	200	23	11.0	9
K5	215	4.0	190	290	32.0	237	254	130	40	44	45	39	60	27	240	30	18.0	14
K6	265	4.0	220	340	28.5	254	276	150	40	45	45	40	65	27	250	30	18.5	14
K7	300	5.0	250	380	36.0	278	314	163	40	45	45	40	70	35	290	38	23.0	18
K8	350	5.0	310	455	36.0	352	378	190	50	60	60	50	85	41	360	45	27.0	18
K9	400	5.0	365	545	40.0	418	428	230	60	70	70	60	95	46	430	50	31.0	18
K10	500	5.0	420	636	51.0	483	497	270	60	80	70	70	120	–	400	45	39.0	18

Dimensions of additional round flanges

Type	Øa1	Øb1	c1	Øe1	f1	Øs1
K1	140	95_{j6}	10	115	3	9
K8	350	250_{h6}	18	300	5	18
K8	450	350_{h6}	20	400	5	18

Dimensions of motors

Type	g	q0	q1	w	x1	y1	z
D063K04	109	179	231	115	109.0	97.0	81.0
D063M04	109	179	231	115	109.0	97.0	81.0
D071K04	124	208	260	120	109.0	97.0	94.0
D071K02	124	208	260	120	109.0	97.0	94.0
D071L04	124	208	260	120	109.0	97.0	94.0
D071L02	124	208	260	120	109.0	97.0	94.0
D080K04	139	238	295	128	109.0	97.0	97.0

Type	g	q0	q1	w	x1	y1	z
IE3D080K02	139	238	295	128	109.0	97.0	97.0
IE3D080L04	157	283	351	137	109.0	97.0	107.0
IE3D080LX02	157	283	351	137	109.0	97.0	107.0
IE3D090S04	177	310	380	146	120.0	109.0	114.0
IE3D090S02	157	283	351	137	120.0	109.0	107.0
IE3D090LX04	177	365	435	146	120.0	109.0	114.0
IE3D090L02	177	310	380	146	120.0	109.0	114.0
IE3D100KX04	196	404	491	155	120.0	109.0	120.0
IE3D100L02	196	340	427	155	120.0	109.0	120.0
IE3D100LX04	196	444	531	155	120.0	109.0	120.0
IE3D112M02	196	374	461	155	120.0	109.0	120.0
IE3D112M04	217	424	521	178	146.5	156.5	134.0
IE3D132S04	258	476	591	199	146.5	156.5	141.5
IE3D132M04	258	526	641	199	146.5	156.5	141.5
IE3D160M04	313	461	589	242	166.5	193.5	138.0
IE3D160L04	313	549	677	242	166.5	193.5	138.0
IE3D180M04	351	601	748	260	166.5	193.5	178.0
IE3D180L04	351	651	798	260	166.5	193.5	178.0
IE3D200L04	390	729	878	298	207.0	209.0	242.0
IE3D225S04	390	706	855	300	207.0	209.0	169.0
IE3D225M04	440	838	986	324	207.0	209.0	242.0

The dimensions a, m and n can be found on the next page.

Dimensions of geared motors

Type	D063			D071			D080		
	a	m	n	a	m	n	a	m	n
K102	∅140	124	36.0	∅140	124	36.0	∅160	128	36.0
K302	–	–	–	∅140	163	52.5	∅160	167	52.5
K303	∅140	200	52.5	∅140	200	52.5	∅160	210	16.0
K514	–	–	–	–	–	–	∅160	215	15.0
K614	–	–	–	–	–	–	∅160	234	18.0
K714	–	–	–	–	–	–	∅160	263	20.0

Type	IE3D080			IE3D090			IE3D100			IE3D112			IE3D132			IE3D160			IE3D180			IE3D200			IE3D225		
	a	m	n	a	m	n	a	m	n	a	m	n	a	m	n	a	m	n	a	m	n	a	m	n	a	m	n
K102	∅160	128	36.0	∅160	128	36.0	–	–	–	–	–	–	–	–	–	–	–	–	–	–	–	–	–	–	–	–	–
K302	∅160	167	52.5	∅160	167	52.5	∅200	169	52.5	∅200	169	52.5	–	–	–	–	–	–	–	–	–	–	–	–	–	–	–
K303	∅160	210	16.0	∅160	210	16.0	–	–	–	–	–	–	–	–	–	–	–	–	–	–	–	–	–	–	–	–	–
K513	∅160	172	15.0	∅160	172	15.0	∅200	174	15.0	∅200	174	15.0	∅250	177	15.0	–	–	–	–	–	–	–	–	–	–	–	–
K514	∅160	215	15.0	∅160	215	15.0	–	–	–	–	–	–	–	–	–	–	–	–	–	–	–	–	–	–	–	–	–
K613	∅160	191	18.0	∅160	191	18.0	∅200	193	18.0	∅200	193	18.0	∅250	196	18.0	∅300	210	18.0	∅300	210	18.0	–	–	–	–	–	–
K614	∅160	234	18.0	∅160	234	18.0	–	–	–	–	–	–	–	–	–	–	–	–	–	–	–	–	–	–	–	–	–
K713	–	–	–	–	–	–	∅200	221	20.0	∅200	221	20.0	∅250	224	20.0	∅300	237	20.0	∅300	237	20.0	–	–	–	–	–	–
K714	∅160	263	20.0	∅160	263	20.0	∅200	283	20.0	∅200	283	20.0	–	–	–	–	–	–	–	–	–	–	–	–	–	–	–
K813	–	–	–	–	–	–	∅200	247	24.0	∅200	247	24.0	∅250	249	24.0	∅300	262	24.0	∅300	262	24.0	–	–	–	–	–	–
K814	–	–	–	–	–	–	∅200	308	24.0	∅200	308	24.0	∅250	320	5.0	–	–	–	–	–	–	–	–	–	–	–	–
K913	–	–	–	–	–	–	–	–	–	–	–	–	∅250	294	25.0	∅300	307	25.0	∅300	307	25.0	∅350	330	25.0	–	–	–
K914	–	–	–	–	–	–	∅200	353	25.0	∅200	353	25.0	∅250	365	25.0	–	–	–	–	–	–	–	–	–	–	–	–
K1013	–	–	–	–	–	–	–	–	–	–	–	–	–	–	–	∅300	392	28.0	∅300	392	28.0	∅350	415	28.0	∅400	415	28.0
K1014	–	–	–	–	–	–	–	–	–	–	–	–	∅250	450	28.0	∅300	475	28.0	∅300	475	28.0	–	–	–	–	–	–

4.3.13 A shaft design (solid shaft), G housing design (pitch circle diameter)

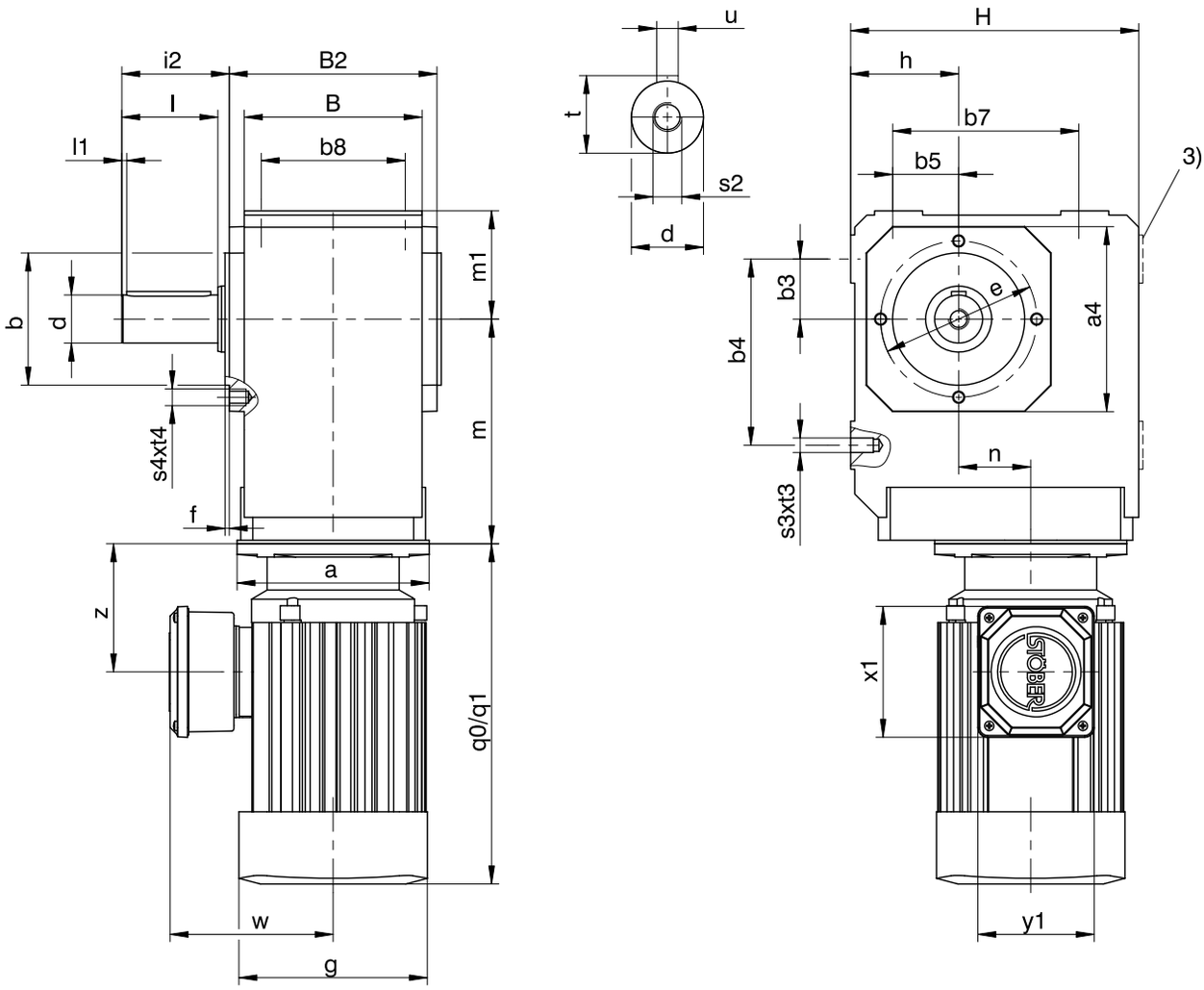

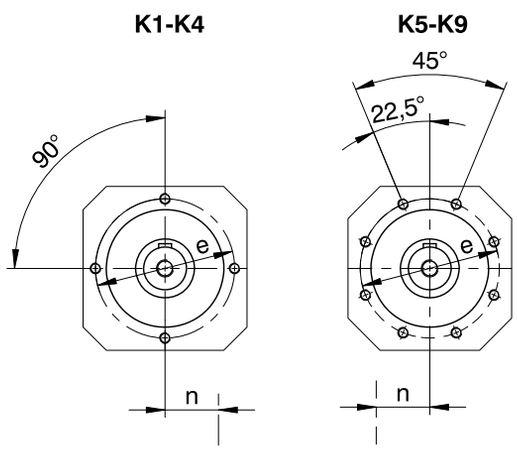

q0	Applies to motors without brake.	q1	Applies to motors with brake.
3)	Only for K1 (other sizes on request)	–	K1 – K4: solid shaft without feather key available, on request starting at K5.
–	K1 – K9: Solid shaft on both sides available.		

Dimensions of gear units

Type	□a4	Øb	b3	b4	b5	b7	b8	B	B2	Ød	Øe	f	h	H	i2	l	l1	m1	s2	s3	s4	t	t3	t4	u
K1	105	75_{j6}	30	90	30	90	70	90	106	25_{k6}	90	3.0	60	160	62.0	50	4	60	M10	M8	M8	28.0	13	13	A8×7×40
K2	116	82_{j6}	35	115	35	115	90	115	134	30_{k6}	100	3.0	65	190	68.0	60	4	65	M10	M10	M8	33.0	16	13	A8×7×50
K3	132	95_{j6}	40	130	40	130	105	130	146	30_{k6}	115	3.0	75	213	69.0	60	4	75	M10	M10	M8	33.0	16	13	A8×7×50
K4	152	110_{j6}	50	155	50	155	120	148	173	40_{k6}	130	3.5	90	240	89.5	80	4	90	M16	M12	M10	43.0	19	16	A12×8×70
K5	145	110_{j6}	40	140	100	140	125	160	185	45_{k6}	130	3.5	160	260	129.5	90	4	100	M16	M16	M10	48.5	26	16	A14×9×80
K6	180	140_{j6}	50	160	110	160	130	168	200	50_{k6}	165	3.5	190	310	136.0	100	4	120	M16	M16	M10	53.5	26	16	A14×9×90
K7	195	155_{j6}	55	180	125	180	145	190	226	60_{m6}	185	3.5	212	342	164.0	120	4	125	M20	M20	M12	64.0	33	19	A18×11×110
K8	226	185_{j6}	75	240	165	240	185	235	282	70_{m6}	215	4.0	265	410	185.0	140	5	145	M20	M24	M12	74.5	38	19	A20×12×125
K9	280	230_{j6}	95	280	185	280	225	285	330	90_{m6}	265	5.0	315	495	220.0	170	8	180	M24	M30	M16	95.0	48	26	A25×14×140

Dimensions of motors

Type	g	q0	q1	w	x1	y1	z
D063K04	109	179	231	115	109.0	97.0	81.0
D063M04	109	179	231	115	109.0	97.0	81.0
D071K04	124	208	260	120	109.0	97.0	94.0
D071K02	124	208	260	120	109.0	97.0	94.0
D071L04	124	208	260	120	109.0	97.0	94.0
D071L02	124	208	260	120	109.0	97.0	94.0
D080K04	139	238	295	128	109.0	97.0	97.0

Type	g	q0	q1	w	x1	y1	z
IE3D080K02	139	238	295	128	109.0	97.0	97.0
IE3D080L04	157	283	351	137	109.0	97.0	107.0
IE3D080LX02	157	283	351	137	109.0	97.0	107.0
IE3D090S04	177	310	380	146	120.0	109.0	114.0
IE3D090S02	157	283	351	137	120.0	109.0	107.0
IE3D090LX04	177	365	435	146	120.0	109.0	114.0
IE3D090L02	177	310	380	146	120.0	109.0	114.0
IE3D100KX04	196	404	491	155	120.0	109.0	120.0
IE3D100L02	196	340	427	155	120.0	109.0	120.0
IE3D100LX04	196	444	531	155	120.0	109.0	120.0
IE3D112M02	196	374	461	155	120.0	109.0	120.0
IE3D112M04	217	424	521	178	146.5	156.5	134.0
IE3D132S04	258	476	591	199	146.5	156.5	141.5
IE3D132M04	258	526	641	199	146.5	156.5	141.5
IE3D160M04	313	461	589	242	166.5	193.5	138.0
IE3D160L04	313	549	677	242	166.5	193.5	138.0
IE3D180M04	351	601	748	260	166.5	193.5	178.0
IE3D180L04	351	651	798	260	166.5	193.5	178.0
IE3D200L04	390	729	878	298	207.0	209.0	242.0

The dimensions a, m and n can be found on the next page.

Dimensions of geared motors

Type	D063			D071			D080		
	a	m	n	a	m	n	a	m	n
K102	∅140	124	36.0	∅140	124	36.0	∅160	128	36.0
K202	∅140	143	46.0	∅140	143	46.0	∅160	147	46.0
K203	∅140	180	46.0	∅140	180	46.0	–	–	–
K302	–	–	–	∅140	163	52.5	∅160	167	52.5
K303	∅140	200	52.5	∅140	200	52.5	∅160	210	16.0
K402	–	–	–	–	–	–	∅160	187	60.0
K403	–	–	–	∅140	220	60.0	∅160	230	23.0
K514	–	–	–	–	–	–	∅160	215	15.0
K614	–	–	–	–	–	–	∅160	234	18.0
K714	–	–	–	–	–	–	∅160	263	20.0

Type	IE3D080			IE3D090			IE3D100			IE3D112			IE3D132			IE3D160			IE3D180			IE3D200		
	a	m	n	a	m	n	a	m	n	a	m	n	a	m	n	a	m	n	a	m	n	a	m	n
K102	∅160	128	36.0	∅160	128	36.0	–	–	–	–	–	–	–	–	–	–	–	–	–	–	–	–	–	–
K202	∅160	147	46.0	∅160	147	46.0	∅200	149	46.0	∅200	149	46.0	–	–	–	–	–	–	–	–	–	–	–	–
K302	∅160	167	52.5	∅160	167	52.5	∅200	169	52.5	∅200	169	52.5	–	–	–	–	–	–	–	–	–	–	–	–
K303	∅160	210	16.0	∅160	210	16.0	–	–	–	–	–	–	–	–	–	–	–	–	–	–	–	–	–	–
K402	∅160	187	60.0	∅160	187	60.0	∅200	189	60.0	∅200	189	60.0	∅250	192	60.0	–	–	–	–	–	–	–	–	–
K403	∅160	230	23.0	∅160	230	23.0	–	–	–	–	–	–	–	–	–	–	–	–	–	–	–	–	–	–
K513	∅160	172	15.0	∅160	172	15.0	∅200	174	15.0	∅200	174	15.0	∅250	177	15.0	–	–	–	–	–	–	–	–	–
K514	∅160	215	15.0	∅160	215	15.0	–	–	–	–	–	–	–	–	–	–	–	–	–	–	–	–	–	–
K613	∅160	191	18.0	∅160	191	18.0	∅200	193	18.0	∅200	193	18.0	∅250	196	18.0	∅300	210	18.0	∅300	210	18.0	–	–	–
K614	∅160	234	18.0	∅160	234	18.0	–	–	–	–	–	–	–	–	–	–	–	–	–	–	–	–	–	–
K713	–	–	–	–	–	–	∅200	221	20.0	∅200	221	20.0	∅250	224	20.0	∅300	237	20.0	∅300	237	20.0	–	–	–
K714	∅160	263	20.0	∅160	263	20.0	∅200	283	20.0	∅200	283	20.0	–	–	–	–	–	–	–	–	–	–	–	–
K813	–	–	–	–	–	–	∅200	247	24.0	∅200	247	24.0	∅250	249	24.0	∅300	262	24.0	∅300	262	24.0	–	–	–
K814	–	–	–	–	–	–	∅200	308	24.0	∅200	308	24.0	∅250	320	5.0	–	–	–	–	–	–	–	–	–
K913	–	–	–	–	–	–	–	–	–	–	–	–	∅250	294	25.0	∅300	307	25.0	∅300	307	25.0	∅350	330	25.0
K914	–	–	–	–	–	–	∅200	353	25.0	∅200	353	25.0	∅250	365	25.0	–	–	–	–	–	–	–	–	–

4.3.14 V shaft design (solid shaft), NG housing design (base + pitch circle diameter)

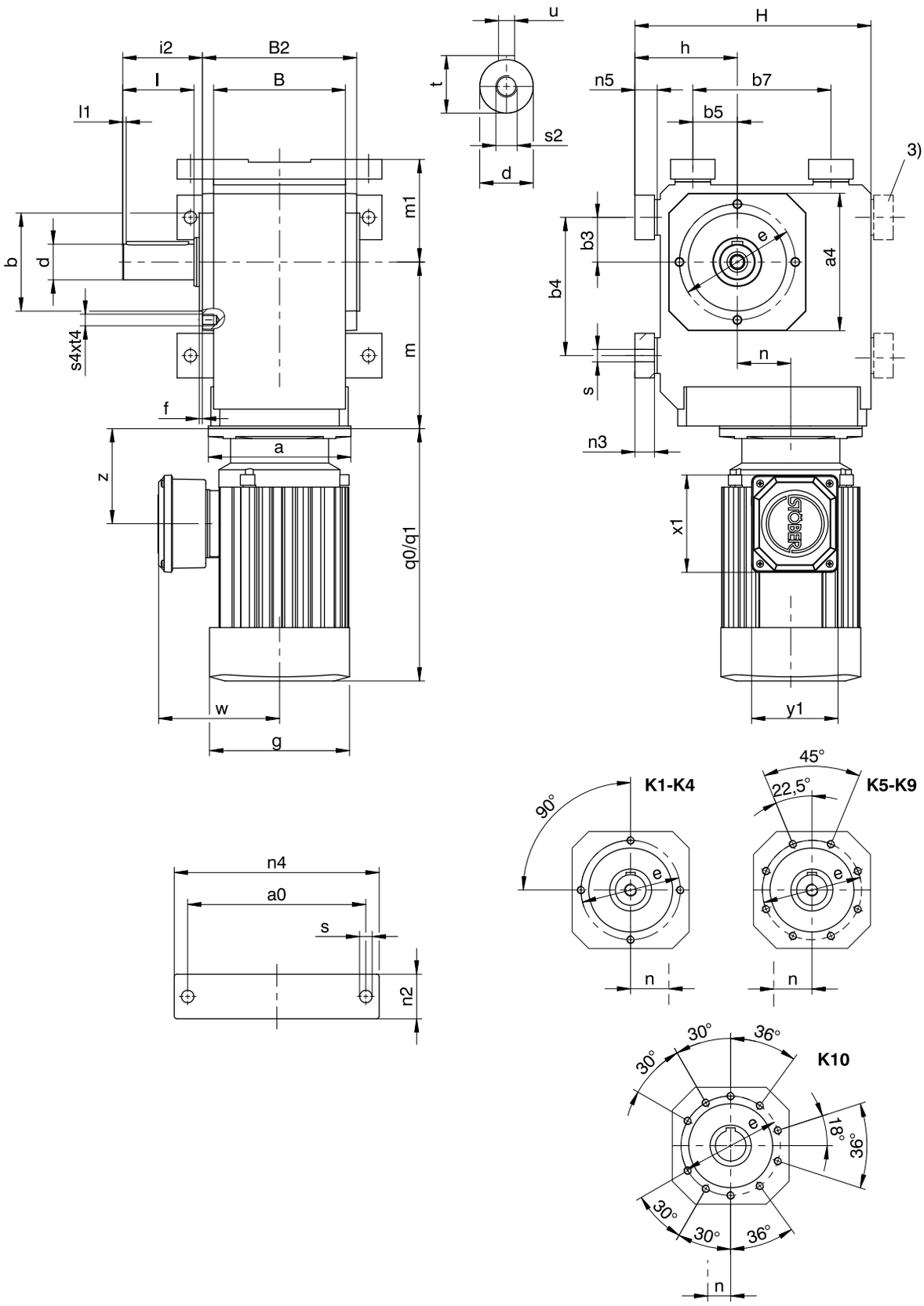

q0	Applies to motors without brake.	q1	Applies to motors with brake.
3)	Only for K1 (other sizes on request)	–	K1 – K4: solid shaft without feather key available, on request starting at K5.
–	K1 – K9: Solid shaft on both sides available.		

Dimensions of gear units

Type	a0	□a4	Øb	b3	b4	b5	b7	B	B2	Ød	Øe	f	h	H	i2	l	l1	m1	n2	n3	n4	n5	Øs	s2	s4	t	t4	u
K1	115	105	75_{j6}	30	90	30	90	90	106	25_{k6}	90	3.0	75	175	62.0	50	4	75	30	13	140	15	9.0	M10	M8	28.0	13	A8×7×40
K2	155	116	82_{j6}	35	115	35	115	115	134	30_{k6}	100	3.0	88	213	68.0	60	4	88	40	20	185	23	11.0	M10	M8	33.0	13	A8×7×50
K3	170	132	95_{j6}	40	130	40	130	130	146	30_{k6}	115	3.0	98	236	69.0	60	4	98	45	20	200	23	11.0	M10	M8	33.0	13	A8×7×50
K4	200	152	110_{j6}	50	155	50	155	148	173	40_{k6}	130	3.5	115	265	89.5	80	4	115	50	22	230	25	14.0	M16	M10	43.0	16	A12×8×70
K5	200	145	110_{j6}	40	140	100	140	160	185	45_{k6}	130	3.5	190	290	129.5	90	4	130	60	27	240	30	18.0	M16	M10	48.5	16	A14×9×80
K6	210	180	140_{j6}	50	160	110	160	168	200	50_{k6}	165	3.5	220	340	136.0	100	4	150	65	27	250	30	18.5	M16	M10	53.5	16	A14×9×90
K7	241	195	155_{j6}	55	180	125	180	190	226	60_{m6}	185	3.5	250	380	164.0	120	4	163	70	35	290	38	23.0	M20	M12	64.0	19	A18×11×110
K8	300	226	185_{j6}	75	240	165	240	235	282	70_{m6}	215	4.0	310	455	185.0	140	5	190	85	41	360	45	27.0	M20	M12	74.5	19	A20×12×125
K9	360	280	230_{j6}	95	280	185	280	285	330	90_{m6}	265	5.0	365	545	220.0	170	8	230	95	46	430	50	31.0	M24	M16	95.0	26	A25×14×140
K10	330	340	250_{h6}	115	350	265	420	400	356	110_{m6}	300	20.0	420	636	240.0	210	15	270	120	–	400	45	39.0	M24	M20	116.0	33	A28×16×180

Dimensions of motors

Type	g	q0	q1	w	x1	y1	z
D063K04	109	179	231	115	109.0	97.0	81.0
D063M04	109	179	231	115	109.0	97.0	81.0
D071K04	124	208	260	120	109.0	97.0	94.0
D071K02	124	208	260	120	109.0	97.0	94.0
D071L04	124	208	260	120	109.0	97.0	94.0
D071L02	124	208	260	120	109.0	97.0	94.0
D080K04	139	238	295	128	109.0	97.0	97.0

Type	g	q0	q1	w	x1	y1	z
IE3D080K02	139	238	295	128	109.0	97.0	97.0
IE3D080L04	157	283	351	137	109.0	97.0	107.0
IE3D080LX02	157	283	351	137	109.0	97.0	107.0
IE3D090S04	177	310	380	146	120.0	109.0	114.0
IE3D090S02	157	283	351	137	120.0	109.0	107.0
IE3D090LX04	177	365	435	146	120.0	109.0	114.0
IE3D090L02	177	310	380	146	120.0	109.0	114.0
IE3D100KX04	196	404	491	155	120.0	109.0	120.0
IE3D100L02	196	340	427	155	120.0	109.0	120.0
IE3D100LX04	196	444	531	155	120.0	109.0	120.0
IE3D112M02	196	374	461	155	120.0	109.0	120.0
IE3D112M04	217	424	521	178	146.5	156.5	134.0
IE3D132S04	258	476	591	199	146.5	156.5	141.5
IE3D132M04	258	526	641	199	146.5	156.5	141.5
IE3D160M04	313	461	589	242	166.5	193.5	138.0
IE3D160L04	313	549	677	242	166.5	193.5	138.0
IE3D180M04	351	601	748	260	166.5	193.5	178.0
IE3D180L04	351	651	798	260	166.5	193.5	178.0
IE3D200L04	390	729	878	298	207.0	209.0	242.0
IE3D225S04	390	706	855	300	207.0	209.0	169.0
IE3D225M04	440	838	986	324	207.0	209.0	242.0

The dimensions a, m and n can be found on the next page.

Dimensions of geared motors

Type	D063			D071			D080		
	a	m	n	a	m	n	a	m	n
K102	∅140	124	36.0	∅140	124	36.0	∅160	128	36.0
K202	∅140	143	46.0	∅140	143	46.0	∅160	147	46.0
K203	∅140	180	46.0	∅140	180	46.0	–	–	–
K302	–	–	–	∅140	163	52.5	∅160	167	52.5
K303	∅140	200	52.5	∅140	200	52.5	∅160	210	16.0
K402	–	–	–	–	–	–	∅160	187	60.0
K403	–	–	–	∅140	220	60.0	∅160	230	23.0
K514	–	–	–	–	–	–	∅160	215	15.0
K614	–	–	–	–	–	–	∅160	234	18.0
K714	–	–	–	–	–	–	∅160	263	20.0

Type	IE3D080			IE3D090			IE3D100			IE3D112			IE3D132			IE3D160			IE3D180			IE3D200			IE3D225		
	a	m	n	a	m	n	a	m	n	a	m	n	a	m	n	a	m	n	a	m	n	a	m	n	a	m	n
K102	∅160	128	36.0	∅160	128	36.0	–	–	–	–	–	–	–	–	–	–	–	–	–	–	–	–	–	–	–	–	–
K202	∅160	147	46.0	∅160	147	46.0	∅200	149	46.0	∅200	149	46.0	–	–	–	–	–	–	–	–	–	–	–	–	–	–	–
K302	∅160	167	52.5	∅160	167	52.5	∅200	169	52.5	∅200	169	52.5	–	–	–	–	–	–	–	–	–	–	–	–	–	–	–
K303	∅160	210	16.0	∅160	210	16.0	–	–	–	–	–	–	–	–	–	–	–	–	–	–	–	–	–	–	–	–	–
K402	∅160	187	60.0	∅160	187	60.0	∅200	189	60.0	∅200	189	60.0	∅250	192	60.0	–	–	–	–	–	–	–	–	–	–	–	–
K403	∅160	230	23.0	∅160	230	23.0	–	–	–	–	–	–	–	–	–	–	–	–	–	–	–	–	–	–	–	–	–
K513	∅160	172	15.0	∅160	172	15.0	∅200	174	15.0	∅200	174	15.0	∅250	177	15.0	–	–	–	–	–	–	–	–	–	–	–	–
K514	∅160	215	15.0	∅160	215	15.0	–	–	–	–	–	–	–	–	–	–	–	–	–	–	–	–	–	–	–	–	–
K613	∅160	191	18.0	∅160	191	18.0	∅200	193	18.0	∅200	193	18.0	∅250	196	18.0	∅300	210	18.0	∅300	210	18.0	–	–	–	–	–	–
K614	∅160	234	18.0	∅160	234	18.0	–	–	–	–	–	–	–	–	–	–	–	–	–	–	–	–	–	–	–	–	–
K713	–	–	–	–	–	–	∅200	221	20.0	∅200	221	20.0	∅250	224	20.0	∅300	237	20.0	∅300	237	20.0	–	–	–	–	–	–
K714	∅160	263	20.0	∅160	263	20.0	∅200	283	20.0	∅200	283	20.0	–	–	–	–	–	–	–	–	–	–	–	–	–	–	–
K813	–	–	–	–	–	–	∅200	247	24.0	∅200	247	24.0	∅250	249	24.0	∅300	262	24.0	∅300	262	24.0	–	–	–	–	–	–
K814	–	–	–	–	–	–	∅200	308	24.0	∅200	308	24.0	∅250	320	5.0	–	–	–	–	–	–	–	–	–	–	–	–
K913	–	–	–	–	–	–	–	–	–	–	–	–	∅250	294	25.0	∅300	307	25.0	∅300	307	25.0	∅350	330	25.0	–	–	–
K914	–	–	–	–	–	–	∅200	353	25.0	∅200	353	25.0	∅250	365	25.0	–	–	–	–	–	–	–	–	–	–	–	–
K1013	–	–	–	–	–	–	–	–	–	–	–	–	–	–	–	∅300	392	28.0	∅300	392	28.0	∅350	415	28.0	∅400	415	28.0
K1014	–	–	–	–	–	–	–	–	–	–	–	–	∅250	450	28.0	∅300	475	28.0	∅300	475	28.0	–	–	–	–	–	–

4.3.15 V shaft design (solid shaft), F housing design (round flange)

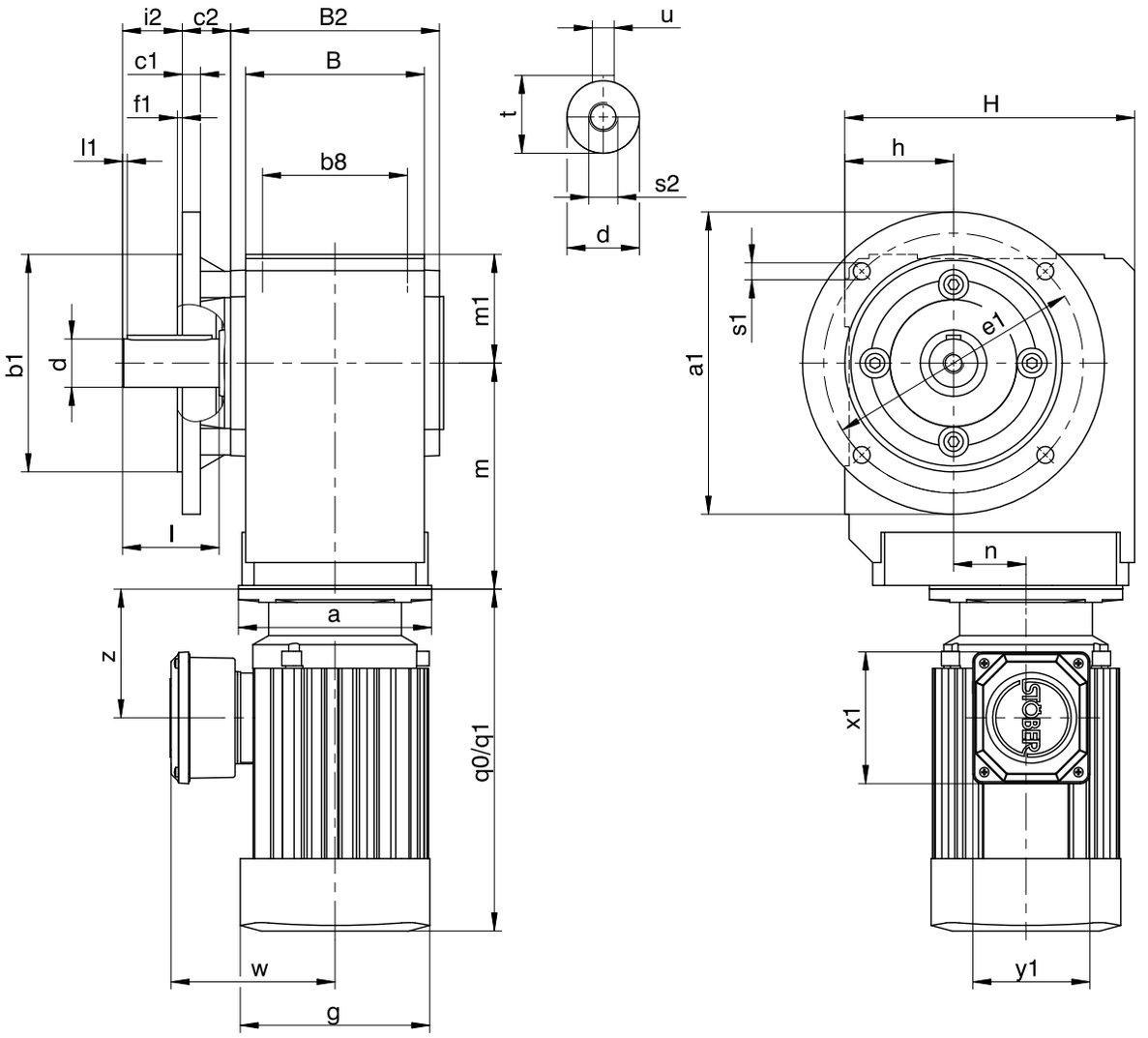

K1-K4

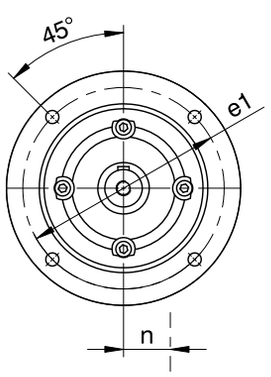

K5-K8

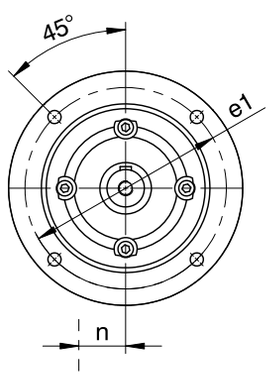

K9

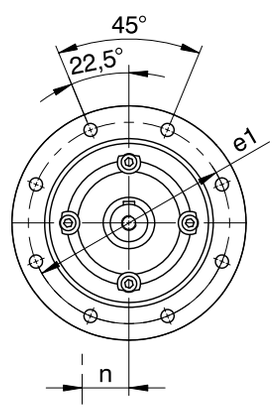

q0	Applies to motors without brake.	q1	Applies to motors with brake.
–	K1 – K4: solid shaft without feather key available, on request starting at K5.	–	K1 – K9: Solid shaft on both sides available.

Dimensions of gear units

Type	Øa1	Øb1	b8	B	B2	c1	c2	Ød	Øe1	f1	h	H	i2	l	l1	m1	Øs1	s2	t	u
K1	160	110_{j6}	70	90	106	10	32.0	25_{k6}	130	3.5	60	160	30.0	50	4	60	9	M10	28.0	A8×7×40
K2	200	130_{j6}	90	115	134	12	32.0	30_{k6}	165	3.5	65	190	36.0	60	4	65	11	M10	33.0	A8×7×50
K3	200	130_{j6}	105	130	146	14	38.0	30_{k6}	165	3.5	75	213	31.0	60	4	75	11	M10	33.0	A8×7×50
K4	250	180_{j6}	120	148	173	15	40.0	40_{k6}	215	4.0	90	240	49.5	80	4	90	14	M16	43.0	A12×8×70
K5	250	180_{j6}	125	160	185	15	39.5	45_{k6}	215	4.0	160	260	90.0	90	4	100	14	M16	48.5	A14×9×80
K6	300	230_{j6}	130	168	200	17	36.0	50_{k6}	265	4.0	190	310	100.0	100	4	120	14	M16	53.5	A14×9×90
K7	350	250_{h6}	145	190	226	18	44.0	60_{m6}	300	5.0	212	342	120.0	120	4	125	18	M20	64.0	A18×11×110
K8	400	300_{h6}	185	235	282	20	45.0	70_{m6}	350	5.0	265	410	140.0	140	5	145	18	M20	74.5	A20×12×125
K9	450	350_{h6}	225	285	330	23	50.0	90_{m6}	400	5.0	315	495	170.0	170	8	180	18	M24	95.0	A25×14×140

Dimensions of additional round flanges

Type	Øa1	Øb1	c1	Øe1	f1	Øs1
K1	140	95_{j6}	10	115	3.0	9
K2	160	110_{j6}	12	130	3.5	9
K3	160	110_{j6}	14	130	3.5	9
K3	250	180_{j6}	14	215	4.0	14
K8	350	250_{h6}	18	300	5.0	18
K8	450	350_{h6}	20	400	5.0	18

Dimensions of motors

Type	g	q0	q1	w	x1	y1	z
D063K04	109	179	231	115	109.0	97.0	81.0
D063M04	109	179	231	115	109.0	97.0	81.0
D071K04	124	208	260	120	109.0	97.0	94.0
D071K02	124	208	260	120	109.0	97.0	94.0
D071L04	124	208	260	120	109.0	97.0	94.0
D071L02	124	208	260	120	109.0	97.0	94.0
D080K04	139	238	295	128	109.0	97.0	97.0

Type	g	q0	q1	w	x1	y1	z
IE3D080K02	139	238	295	128	109.0	97.0	97.0
IE3D080L04	157	283	351	137	109.0	97.0	107.0
IE3D080LX02	157	283	351	137	109.0	97.0	107.0
IE3D090S04	177	310	380	146	120.0	109.0	114.0
IE3D090S02	157	283	351	137	120.0	109.0	107.0
IE3D090LX04	177	365	435	146	120.0	109.0	114.0
IE3D090L02	177	310	380	146	120.0	109.0	114.0
IE3D100KX04	196	404	491	155	120.0	109.0	120.0
IE3D100L02	196	340	427	155	120.0	109.0	120.0
IE3D100LX04	196	444	531	155	120.0	109.0	120.0
IE3D112M02	196	374	461	155	120.0	109.0	120.0
IE3D112M04	217	424	521	178	146.5	156.5	134.0
IE3D132S04	258	476	591	199	146.5	156.5	141.5
IE3D132M04	258	526	641	199	146.5	156.5	141.5
IE3D160M04	313	461	589	242	166.5	193.5	138.0
IE3D160L04	313	549	677	242	166.5	193.5	138.0
IE3D180M04	351	601	748	260	166.5	193.5	178.0
IE3D180L04	351	651	798	260	166.5	193.5	178.0
IE3D200L04	390	729	878	298	207.0	209.0	242.0

The dimensions a, m and n can be found on the next page.

Dimensions of geared motors

Type	D063			D071			D080		
	a	m	n	a	m	n	a	m	n
K102	∅140	124	36.0	∅140	124	36.0	∅160	128	36.0
K202	∅140	143	46.0	∅140	143	46.0	∅160	147	46.0
K203	∅140	180	46.0	∅140	180	46.0	–	–	–
K302	–	–	–	∅140	163	52.5	∅160	167	52.5
K303	∅140	200	52.5	∅140	200	52.5	∅160	210	16.0
K402	–	–	–	–	–	–	∅160	187	60.0
K403	–	–	–	∅140	220	60.0	∅160	230	23.0
K514	–	–	–	–	–	–	∅160	215	15.0
K614	–	–	–	–	–	–	∅160	234	18.0
K714	–	–	–	–	–	–	∅160	263	20.0

Type	IE3D080			IE3D090			IE3D100			IE3D112			IE3D132			IE3D160			IE3D180			IE3D200		
	a	m	n	a	m	n	a	m	n	a	m	n	a	m	n	a	m	n	a	m	n	a	m	n
K102	∅160	128	36.0	∅160	128	36.0	–	–	–	–	–	–	–	–	–	–	–	–	–	–	–	–	–	–
K202	∅160	147	46.0	∅160	147	46.0	∅200	149	46.0	∅200	149	46.0	–	–	–	–	–	–	–	–	–	–	–	–
K302	∅160	167	52.5	∅160	167	52.5	∅200	169	52.5	∅200	169	52.5	–	–	–	–	–	–	–	–	–	–	–	–
K303	∅160	210	16.0	∅160	210	16.0	–	–	–	–	–	–	–	–	–	–	–	–	–	–	–	–	–	–
K402	∅160	187	60.0	∅160	187	60.0	∅200	189	60.0	∅200	189	60.0	∅250	192	60.0	–	–	–	–	–	–	–	–	–
K403	∅160	230	23.0	∅160	230	23.0	–	–	–	–	–	–	–	–	–	–	–	–	–	–	–	–	–	–
K513	∅160	172	15.0	∅160	172	15.0	∅200	174	15.0	∅200	174	15.0	∅250	177	15.0	–	–	–	–	–	–	–	–	–
K514	∅160	215	15.0	∅160	215	15.0	–	–	–	–	–	–	–	–	–	–	–	–	–	–	–	–	–	–
K613	∅160	191	18.0	∅160	191	18.0	∅200	193	18.0	∅200	193	18.0	∅250	196	18.0	∅300	210	18.0	∅300	210	18.0	–	–	–
K614	∅160	234	18.0	∅160	234	18.0	–	–	–	–	–	–	–	–	–	–	–	–	–	–	–	–	–	–
K713	–	–	–	–	–	–	∅200	221	20.0	∅200	221	20.0	∅250	224	20.0	∅300	237	20.0	∅300	237	20.0	–	–	–
K714	∅160	263	20.0	∅160	263	20.0	∅200	283	20.0	∅200	283	20.0	–	–	–	–	–	–	–	–	–	–	–	–
K813	–	–	–	–	–	–	∅200	247	24.0	∅200	247	24.0	∅250	249	24.0	∅300	262	24.0	∅300	262	24.0	–	–	–
K814	–	–	–	–	–	–	∅200	308	24.0	∅200	308	24.0	∅250	320	5.0	–	–	–	–	–	–	–	–	–
K913	–	–	–	–	–	–	–	–	–	–	–	–	∅250	294	25.0	∅300	307	25.0	∅300	307	25.0	∅350	330	25.0
K914	–	–	–	–	–	–	∅200	353	25.0	∅200	353	25.0	∅250	365	25.0	–	–	–	–	–	–	–	–	–

4.3.16 V shaft design (solid shaft), NF housing design (base + round flange)

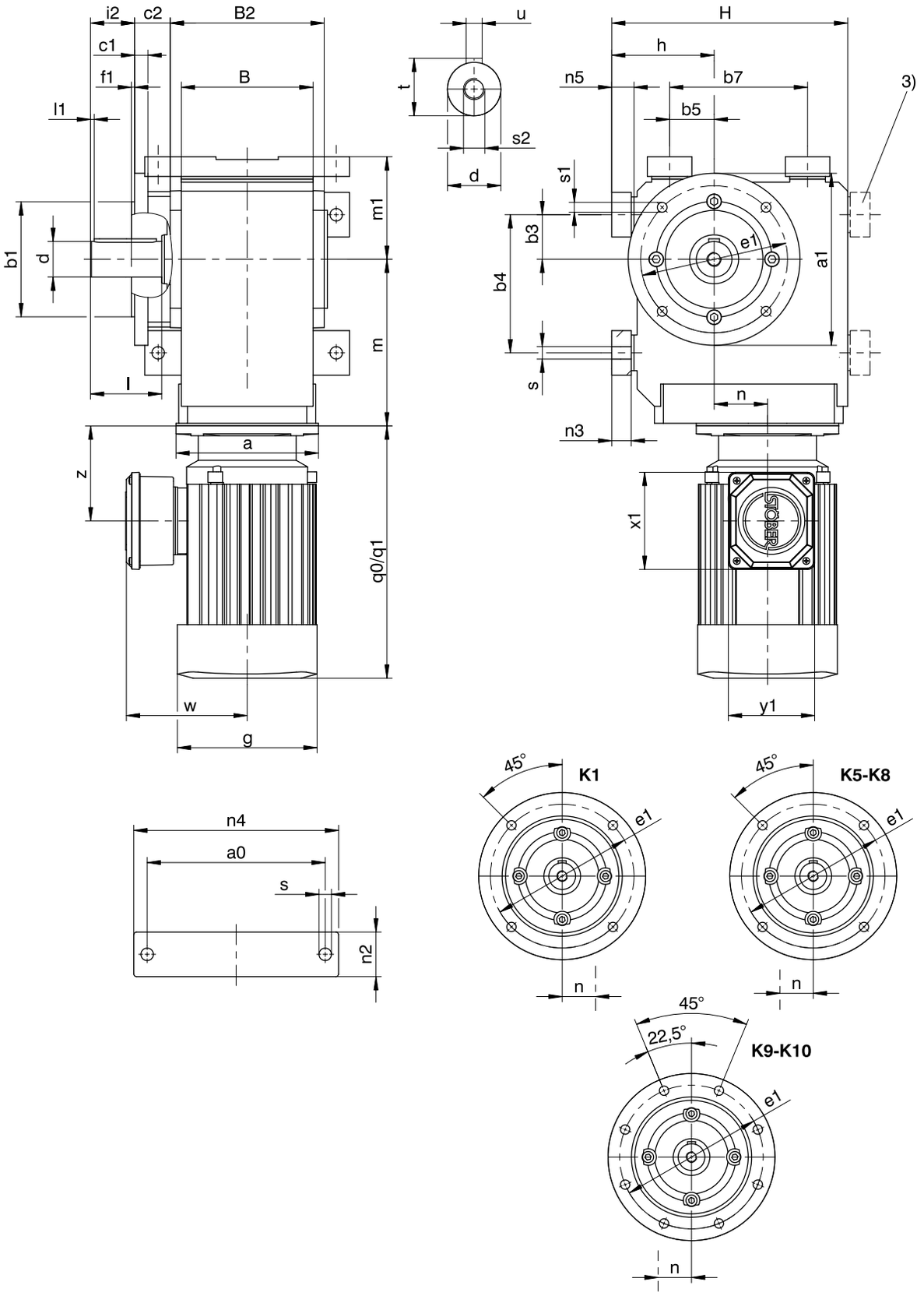

q0 Applies to motors without brake.

q1 Applies to motors with brake.

3) Only for K1 (other sizes on request)

– K1 – K4: solid shaft without feather key available, on request starting at K5.

– K1 – K10: Solid shaft on both sides available.

Dimensions of gear units

Type	a0	Øa1	Øb1	b3	b4	b5	b7	B	B2	c1	c2	Ød	Øe1	f1	h	H	i2	l	l1	m1	n2	n3	n4	n5	Øs	Øs1	s2	t	u
K1	115	160	110_{j6}	30	90	30	90	90	106	10	32.0	25_{k6}	130	3.5	75	175	30.0	50	4	75	30	13	140	15	9.0	9	M10	28.0	A8×7×40
K3	170	160	110_{j6}	40	130	40	130	130	146	14	38.0	30_{k6}	130	3.5	98	236	31.0	60	4	98	45	20	200	23	11.0	9	M10	33.0	A8×7×50

Type	a0	Øa1	Øb1	b3	b4	b5	b7	B	B2	c1	c2	Ød	Øe1	f1	h	H	i2	l	l1	m1	n2	n3	n4	n5	Øs	Øs1	s2	t	u
K5	200	250	180_{j6}	40	140	100	140	160	185	15	39.5	45_{k6}	215	4.0	190	290	90.0	90	4	130	60	27	240	30	18.0	14	M16	48.5	A14×9×80
K6	210	300	230_{j6}	50	160	110	160	168	200	17	36.0	50_{k6}	265	4.0	220	340	100.0	100	4	150	65	27	250	30	18.5	14	M16	53.5	A14×9×90
K7	241	350	250_{h6}	55	180	125	180	190	226	18	44.0	60_{m6}	300	5.0	250	380	120.0	120	4	163	70	35	290	38	23.0	18	M20	64.0	A18×11×110
K8	300	400	300_{h6}	75	240	165	240	235	282	20	45.0	70_{m6}	350	5.0	310	455	140.0	140	5	190	85	41	360	45	27.0	18	M20	74.5	A20×12×125
K9	360	450	350_{h6}	95	280	185	280	285	330	23	50.0	90_{m6}	400	5.0	365	545	170.0	170	8	230	95	46	430	50	31.0	18	M24	95.0	A25×14×140
K10	330	550	450_{h6}	115	350	265	420	400	356	25	78.0	110_{m6}	500	5.0	420	636	210.0	210	15	270	120	–	400	45	39.0	18	M24	116.0	A28×16×180

Dimensions of additional round flanges

Type	Øa1	Øb1	c1	Øe1	f1	Øs1
K1	140	95_{j6}	10	115	3	9
K8	350	250_{h6}	18	300	5	18
K8	450	350_{h6}	20	400	5	18

Dimensions of motors

Type	g	q0	q1	w	x1	y1	z
D063K04	109	179	231	115	109.0	97.0	81.0
D063M04	109	179	231	115	109.0	97.0	81.0
D071K04	124	208	260	120	109.0	97.0	94.0
D071K02	124	208	260	120	109.0	97.0	94.0
D071L04	124	208	260	120	109.0	97.0	94.0
D071L02	124	208	260	120	109.0	97.0	94.0
D080K04	139	238	295	128	109.0	97.0	97.0

Type	g	q0	q1	w	x1	y1	z
IE3D080K02	139	238	295	128	109.0	97.0	97.0
IE3D080L04	157	283	351	137	109.0	97.0	107.0
IE3D080LX02	157	283	351	137	109.0	97.0	107.0
IE3D090S04	177	310	380	146	120.0	109.0	114.0
IE3D090S02	157	283	351	137	120.0	109.0	107.0
IE3D090LX04	177	365	435	146	120.0	109.0	114.0
IE3D090L02	177	310	380	146	120.0	109.0	114.0
IE3D100KX04	196	404	491	155	120.0	109.0	120.0
IE3D100L02	196	340	427	155	120.0	109.0	120.0
IE3D100LX04	196	444	531	155	120.0	109.0	120.0
IE3D112M02	196	374	461	155	120.0	109.0	120.0
IE3D112M04	217	424	521	178	146.5	156.5	134.0
IE3D132S04	258	476	591	199	146.5	156.5	141.5
IE3D132M04	258	526	641	199	146.5	156.5	141.5
IE3D160M04	313	461	589	242	166.5	193.5	138.0
IE3D160L04	313	549	677	242	166.5	193.5	138.0
IE3D180M04	351	601	748	260	166.5	193.5	178.0
IE3D180L04	351	651	798	260	166.5	193.5	178.0
IE3D200L04	390	729	878	298	207.0	209.0	242.0
IE3D225S04	390	706	855	300	207.0	209.0	169.0
IE3D225M04	440	838	986	324	207.0	209.0	242.0

The dimensions a, m and n can be found on the next page.

Dimensions of geared motors

Type	D063			D071			D080		
	a	m	n	a	m	n	a	m	n
K102	∅140	124	36.0	∅140	124	36.0	∅160	128	36.0
K302	–	–	–	∅140	163	52.5	∅160	167	52.5
K303	∅140	200	52.5	∅140	200	52.5	∅160	210	16.0
K514	–	–	–	–	–	–	∅160	215	15.0
K614	–	–	–	–	–	–	∅160	234	18.0
K714	–	–	–	–	–	–	∅160	263	20.0

Type	IE3D080			IE3D090			IE3D100			IE3D112			IE3D132			IE3D160			IE3D180			IE3D200			IE3D225		
	a	m	n	a	m	n	a	m	n	a	m	n	a	m	n	a	m	n	a	m	n	a	m	n	a	m	n
K102	∅160	128	36.0	∅160	128	36.0	–	–	–	–	–	–	–	–	–	–	–	–	–	–	–	–	–	–	–	–	–
K302	∅160	167	52.5	∅160	167	52.5	∅200	169	52.5	∅200	169	52.5	–	–	–	–	–	–	–	–	–	–	–	–	–	–	–
K303	∅160	210	16.0	∅160	210	16.0	–	–	–	–	–	–	–	–	–	–	–	–	–	–	–	–	–	–	–	–	–
K513	∅160	172	15.0	∅160	172	15.0	∅200	174	15.0	∅200	174	15.0	∅250	177	15.0	–	–	–	–	–	–	–	–	–	–	–	–
K514	∅160	215	15.0	∅160	215	15.0	–	–	–	–	–	–	–	–	–	–	–	–	–	–	–	–	–	–	–	–	–
K613	∅160	191	18.0	∅160	191	18.0	∅200	193	18.0	∅200	193	18.0	∅250	196	18.0	∅300	210	18.0	∅300	210	18.0	–	–	–	–	–	–
K614	∅160	234	18.0	∅160	234	18.0	–	–	–	–	–	–	–	–	–	–	–	–	–	–	–	–	–	–	–	–	–
K713	–	–	–	–	–	–	∅200	221	20.0	∅200	221	20.0	∅250	224	20.0	∅300	237	20.0	∅300	237	20.0	–	–	–	–	–	–
K714	∅160	263	20.0	∅160	263	20.0	∅200	283	20.0	∅200	283	20.0	–	–	–	–	–	–	–	–	–	–	–	–	–	–	–
K813	–	–	–	–	–	–	∅200	247	24.0	∅200	247	24.0	∅250	249	24.0	∅300	262	24.0	∅300	262	24.0	–	–	–	–	–	–
K814	–	–	–	–	–	–	∅200	308	24.0	∅200	308	24.0	∅250	320	5.0	–	–	–	–	–	–	–	–	–	–	–	–
K913	–	–	–	–	–	–	–	–	–	–	–	–	∅250	294	25.0	∅300	307	25.0	∅300	307	25.0	∅350	330	25.0	–	–	–
K914	–	–	–	–	–	–	∅200	353	25.0	∅200	353	25.0	∅250	365	25.0	–	–	–	–	–	–	–	–	–	–	–	–
K1013	–	–	–	–	–	–	–	–	–	–	–	–	–	–	–	∅300	392	28.0	∅300	392	28.0	∅350	415	28.0	∅400	415	28.0
K1014	–	–	–	–	–	–	–	–	–	–	–	–	∅250	450	28.0	∅300	475	28.0	∅300	475	28.0	–	–	–	–	–	–

4.3.17 Oil expansion tank

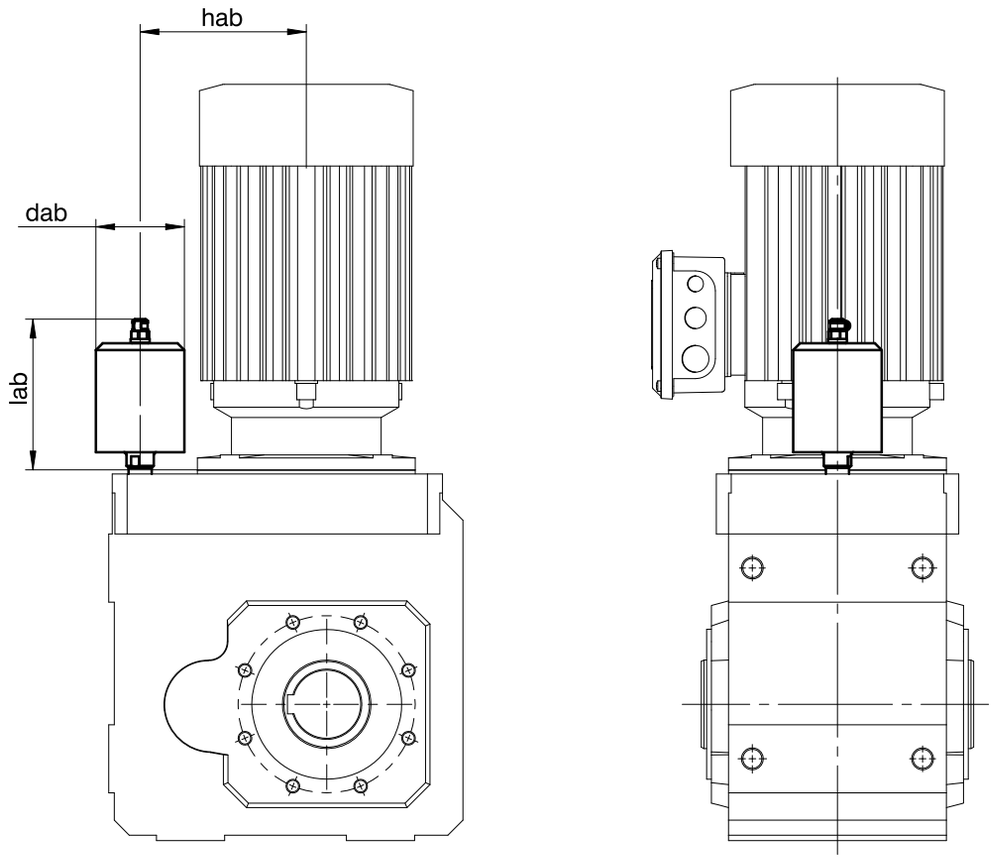

Dimensions

Type	IE3D080			IE3D090			IE3D100			IE3D112			IE3D132			IE3D160			IE3D180			IE3D200		
	dab	hab	lab	dab	hab	lab	dab	hab	lab	dab	hab	lab	dab	hab	lab	dab	hab	lab	dab	hab	lab	dab	hab	lab
K513	65	122.0	113.5	65	122.0	113.5	65	130.0	165.0	65	130.0	165.0	65	167.0	165.0	–	–	–	–	–	–	–	–	–
K613	65	148.5	116.5	65	148.5	116.5	65	148.5	116.5	65	148.5	116.5	65	198.5	165.0	65	194.5	191.0	65	194.5	191.0	–	–	–
K713	–	–	–	–	–	–	65	170.0	114.5	65	170.0	114.5	65	170.0	115.5	65	214.0	191.5	65	214.0	191.5	–	–	–
K813	–	–	–	–	–	–	73	205.0	129.5	73	205.0	129.5	73	205.0	129.5	73	205.0	129.5	73	205.0	129.5	–	–	–
K913	–	–	–	–	–	–	–	–	–	–	–	–	73	255.0	129.5	73	255.0	129.5	73	255.0	129.5	73	255.0	129.5
K1013	–	–	–	–	–	–	–	–	–	–	–	–	–	–	–	73	305.0	126.0	73	305.0	126.0	73	305.0	112.0

More information can be found in Chapter [4.6.3]

4.4 Type designation

In this chapter, you can find an explanation of the type designation with the associated options.

Additional ordering information not included in the type designation can be found at the end of the chapter.

Sample code

K	4	0	2	A	G	0560	IE3D080L04

Explanation

Code	Designation	Design
K	Type	Helical bevel gear unit
4	Size	4 (example)
0	Generation	Generation 0
1		Generation 1
2	Stages	Two-stage
3		Three-stage
4		Four-stage
A	Shaft	Hollow shaft with keyway
S		Hollow shaft with shrink ring
V		Solid shaft
G	Housing	Pitch circle diameter
F		Round flange
NG		Foot + pitch circle diameter
NF		Foot + round flange
GD		Pitch circle diameter + torque arm bracket
NGD		Foot + pitch circle diameter + torque arm bracket
0560	Transmission ratio (i x 10 rounded)	i = 55.71 (example)
IE3D080 L04	Motor	IE3D asynchronous motor
D080K04		Asynchronous motor

In order to complete the type designation, also specify:

- A detailed type designation of the motor, see the chapter [▶ 5.4]
- The mounting position, see the chapter [▶ 4.5.4]
- Attachment of solid shaft: gear unit side 3 or 4; solid shaft on both sides
- Attachment of hollow shaft with keyway: insertion side 3 or 4
- Attachment of hollow shaft with shrink ring: shrink ring on gear unit side 3 or 4
- Attachment of baseboards: gear unit side 1 or 5
- Attachment of flange: gear unit side 3 or 4
- Pitch circle diameter: gear unit side 3 or 4
- Attachment of torque arm bracket: torque arm bracket on gear unit side 1 or 5, eye on gear unit side 3 or 4
- The position of the terminal box, see the chapter [▶ 4.5.6]
- Oil expansion tank (recommended for gear units in mounting position EL5), see the chapter [▶ 4.6.3]
- Standard or reinforced output bearing

An explanation of the gear unit sides can be found in the chapter [▶ 4.5.4].

4.5 Product description

4.5.1 Housing design

Pitch circle diameter G	Round flange F
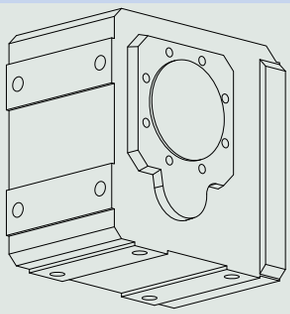	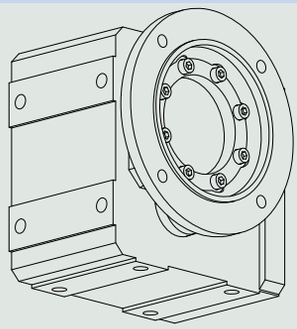

Foot + pitch circle diameter NG	Foot + round flange NF
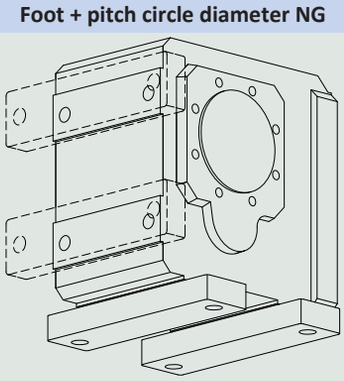	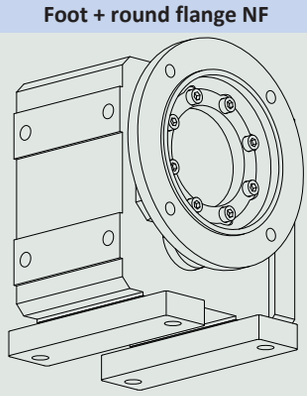

Pitch circle diameter + torque arm bracket GD	Foot + pitch circle diameter + torque arm bracket NGD
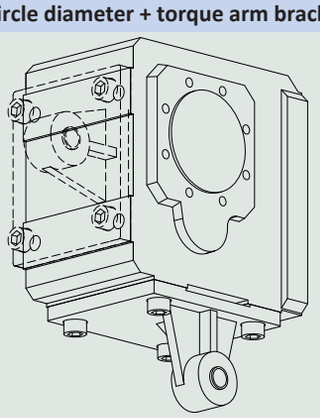	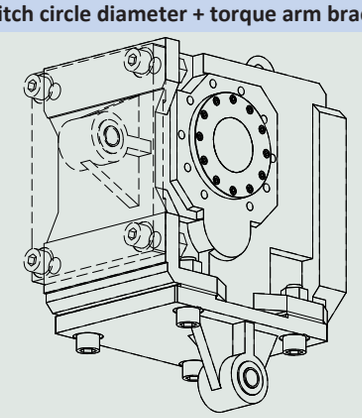

	G	F	NG	NF	GD	NGD
K1	✓	✓	✓	✓	✓	–
K2	✓	✓	✓	–	✓	–
K3	✓	✓	✓	–	✓	–
K4	✓	✓	✓	–	✓	–
K5	✓	✓	✓	✓	✓	–
K6	✓	✓	✓	✓	✓	–
K7	✓	✓	✓	✓	✓	–
K8	✓	✓	✓	✓	✓	–
K9	✓	✓	✓	✓	✓	–
K10	–	–	✓	✓	–	✓

4.5.2 Combinatorial shaft/housing design

	Housing design						
Shaft design	**Code**	**G**	**F**	**NG**	**NF**	**GD**	**NGD**
Hollow shaft with keyway	**A**	AG	AF	ANG	ANF	AGD	ANGD
Hollow shaft with shrink ring	**S**	SG	SF	SNG	SNF	SGD	SNGD
Solid shaft [1)]	**V**	VG	VF	VNG	VNF	–	–

[1)] Gear units in sizes K1 – K10 come with a solid shaft with feather key as standard. Gear units in sizes K1 – K4 can be ordered with the option of a solid shaft without feather key. Only upon request starting at size K5.

4.5.3 Installation conditions

Hollow shaft

The hollow shaft hole tolerance is ISO H7. The tolerance of the machine shaft must be ISO k6.

Take care to align the machine shaft with the gear unit hollow shaft when attaching the gear unit.

Maximum deviation ≤ 0.03 mm.

For simpler assembly and disassembly of the machine shaft, the hollow shafts are equipped with a spiral groove (as a grease deposit).

A hardened, threaded keeper plate is included in the scope of delivery. You also have the option to order the hollow shaft without a keeper plate.

Hollow shaft with shrink ring

The tolerance of the hollow shaft hole is ISO H7.

The machine shaft must be executed as follows:

Gear unit type	Tolerance
K1 to K6	ISO h9
K7 to K10	ISO h6

Select a material for the machine shaft with a permitted surface pressure of $p \geq 325\ N/mm^2$.

Possible materials:

- C45E +QT
- 42CrMo4

Fastening the gear units on the machine side using the pitch circle diameter

The specified torques and forces only apply when fastening gear units at the machine side using screws of quality 10.9. In addition, the gear unit housings must be adjusted at the pilot. The machine-side fit must be H7.

4.5.4 Mounting positions

The following table shows the standard mounting positions.

The numbers identify the gear unit sides. The mounting position is defined by the gear side facing downwards.

Mounting positions for gear unit sizes K1 – K4

EL1	EL2	EL3
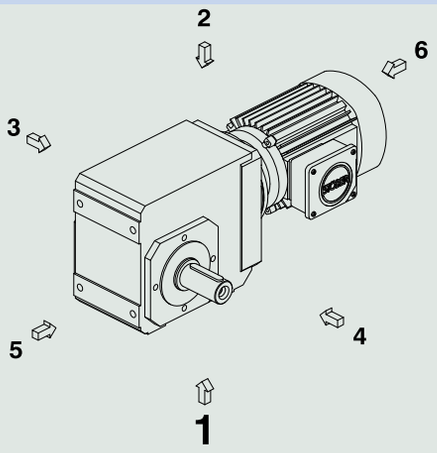	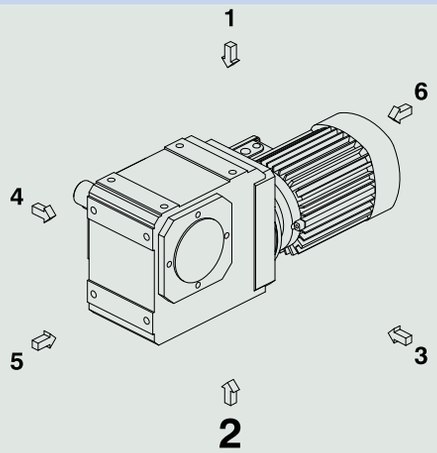	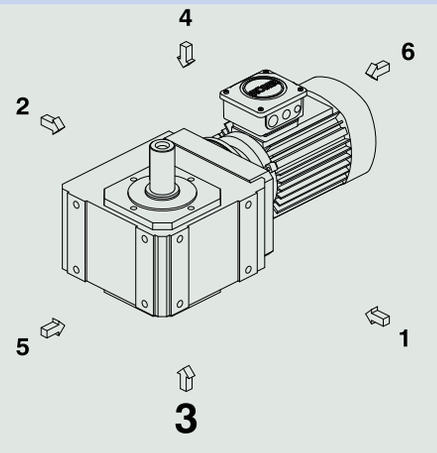
EL4	**EL5**	**EL6**
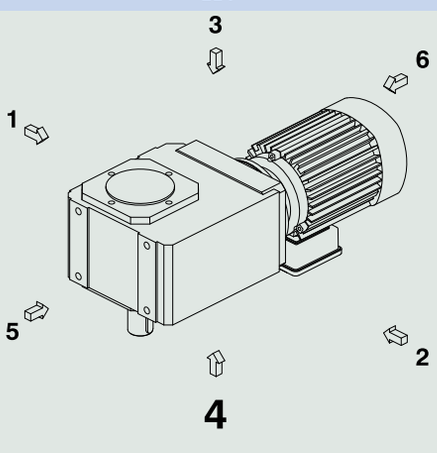	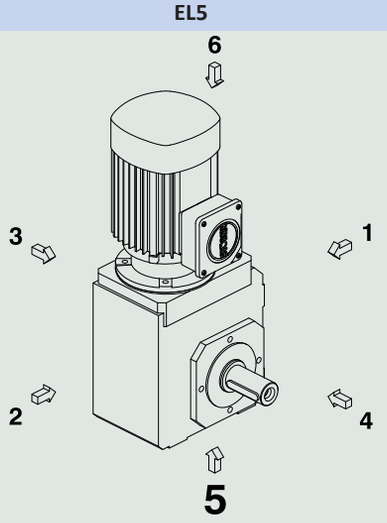	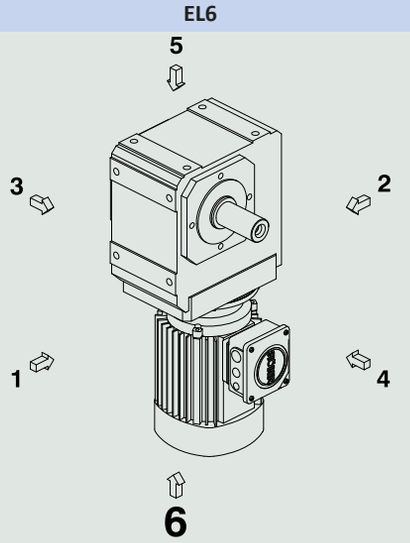

Mounting positions for gear unit sizes K5 – K10

EL1	EL2	EL3
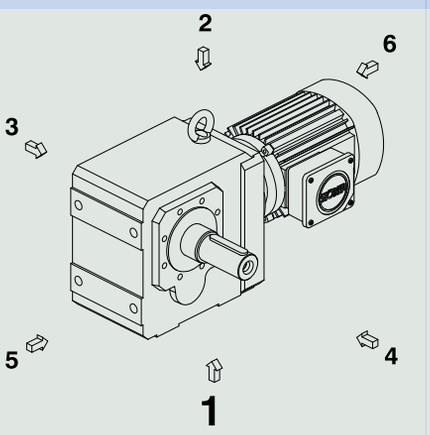	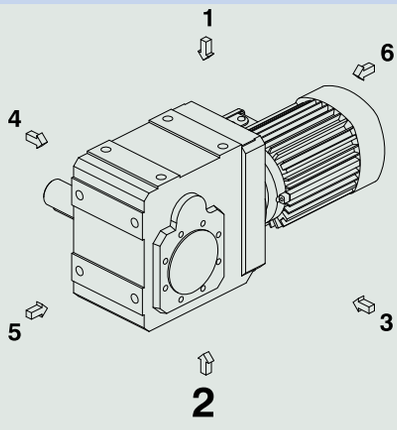	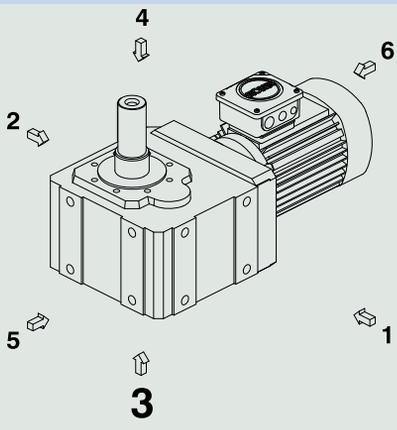
1	**2**	**3**

EL4	EL5	EL6
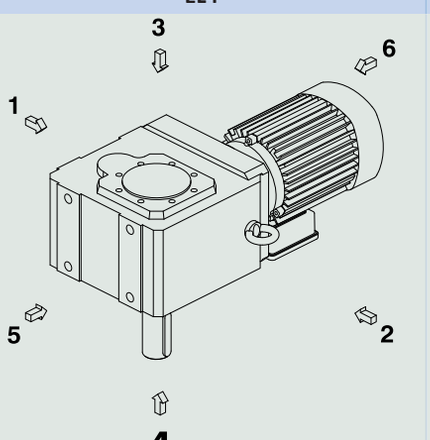	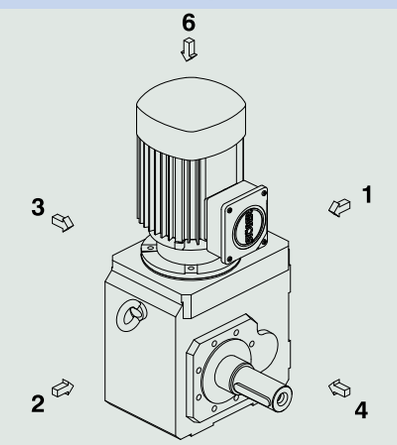	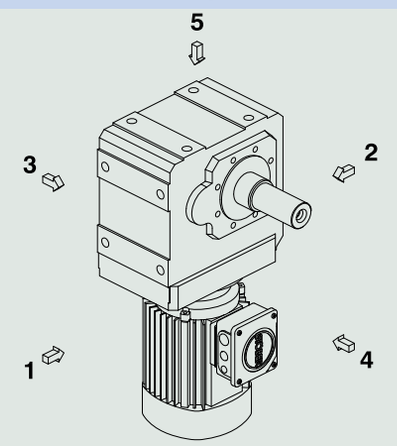
4	**5**	**6**

Since the lubricant filling volume of the gear unit depends on the mounting position, the mounting position must be specified when ordering.

4.5.5 Lubricants

STOBER fills the gear units with the amount and type of lubricant specified on the nameplate. The filling volume and the structure of the gear units depend on the mounting position.

Only install the gear units in the intended mounting position! Reposition the gear units only after consulting STOBER. Otherwise, STOBER assumes no liability for the gear units.

4.5.6 Position of the terminal box

Mounting position EL1 Terminal box in the 0° position (standard)	Mounting position EL4 Terminal box in the 0° position (standard)
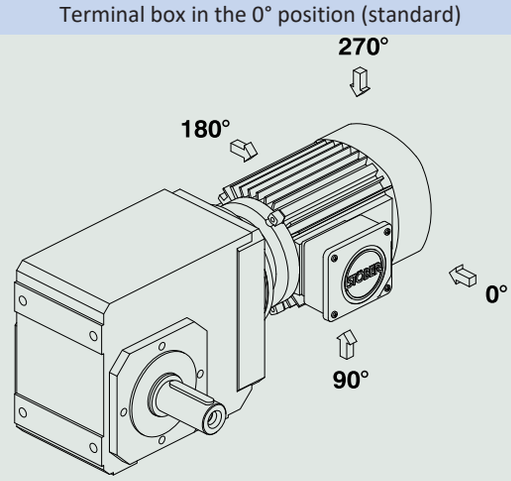	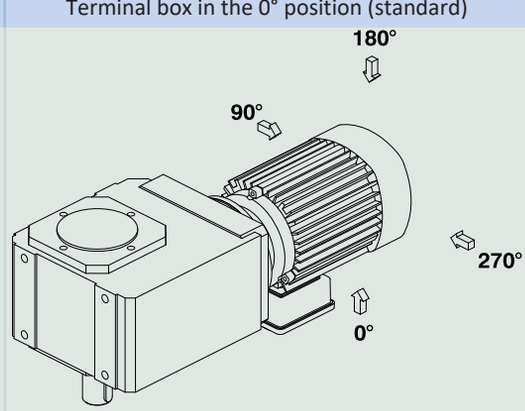

Indicate variations for your geared motor in the purchase order.

Note that the terminal box position rotates along with the geared motor if the geared motor rotates to another mounting position.

4.5.7 Other product features

Feature	Value
Max. permitted gear unit temperature (on the surface of the gear unit)	≤ 80 °C
Paint	RAL 7035 light gray Optional selection of various RAL colors.
(ATEX) Directive 2014/34/EU	You can get asynchronous motors for use in potentially explosive atmospheres on request.
Protection class	IP56

4.5.8 Losses due to splashing

Increased losses due to splashing can occur in individual cases under certain operating conditions. These can lead to oil leakage or unacceptably high operating temperatures.

Please coordinate with STOBER to determine a suitable course of action if:

- The surrounding temperature is under −10 °C or over +40 °C
- The gear unit type meets the following conditions:

Type	Mounting position	n_{1N} [rpm]	ED	i
K5, K6	EL5, EL6	> 2500	> 60%, > 20 min	< 18
K7, K8	EL5, EL6	> 2000	> 60%, > 20 min	< 15
K9, K10	EL5, EL6	> 1750	> 60%, > 20 min	< 15

4.5.9 Maintenance

The instructions for maintenance can be found in the operating manual, ID 443027_en, at http://www.stoeber.de/en/downloads/. Enter the ID of the documentation in the Search... field.

Ventilation

Air release valves are fitted as a standard feature and independently of installation position for gear unit sizes K5 to K10.

For the position and dimensions of the air release valve, refer to the 3D model.

Download the 3D model at http://configurator.stoeber.de.

4.5.10 Direction of rotation

Solid shaft (V), solid shaft on both sides (V), hollow shaft with keyway (A)

Type	Output side 4	Output side 3
K102 – K402	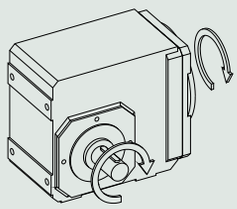	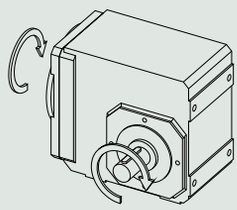
K203 – K403	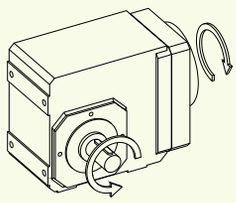	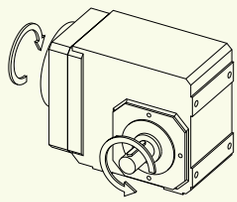
K513 – K1013	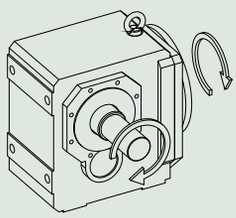	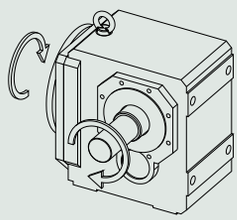
K514 – K1014	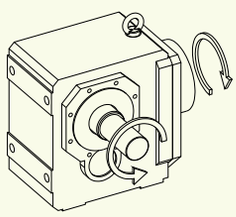	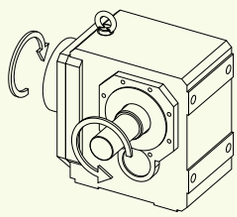

The specified directions of rotation also apply to gear units with hollow shaft (A) if the insertion side of the machine shaft corresponds to the side of the solid shaft that is shown.

The pictures show mounting position EL1.

Hollow shaft with shrink ring (S)

Type	Shrink ring side 4	Shrink ring side 3
K102 – K402	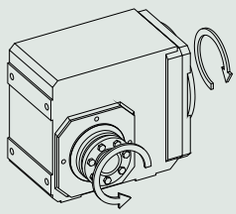	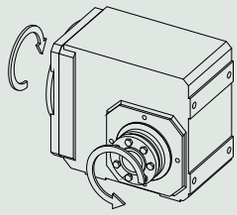
K203 – K403	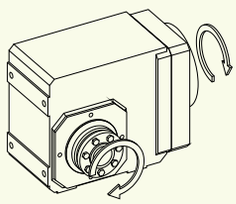	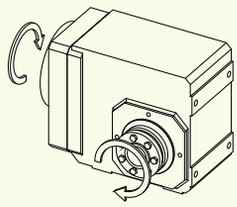
K513 – K813	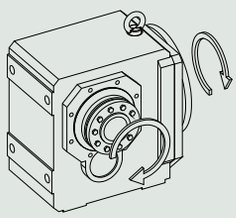	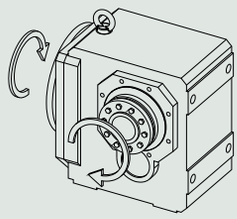
K514 – K814	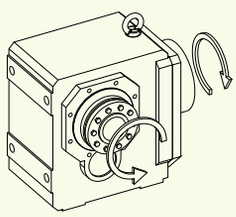	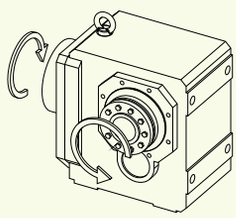
K913 – K1013	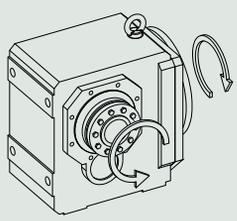	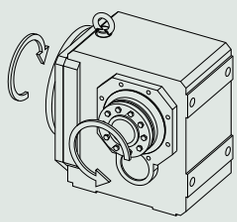
K914 – K1014	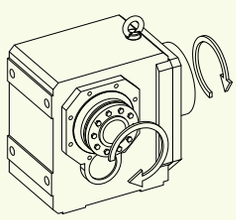	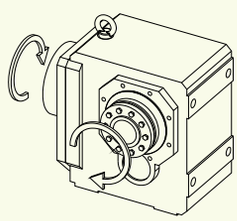

The pictures show mounting position EL1.

4.6 Project configuration

Project your drives using the information in this chapter. In doing so, observe the limit conditions in this chapter to ensure a safe design.

An explanation of the formula symbols can be found in Chapter [▷ 13.1]

Determine the following for your application:

- The actual torque M_{2N*}
- The actual speed n_{2*}
- The operating mode operating factor fB_{op}
- The run-time operating factor fB_t
- The motor operating factor fB_{mot}
- The duty cycle ED in %

$$ED = \frac{t_{op}}{T} \cdot 100\%$$

For the S4 and S8 operating mode:

- The mass moment of inertia J_{2*}

$$J_{1*} = \frac{J_{2*}}{i^2}$$

Calculate the motor rating necessary for your application:

$$P_{N*} = \frac{M_{2N*} \cdot n_{2*} \cdot fB_{mot}}{9550}$$

Using the determined values and the calculated motor rating, select a suitable drive from the selection table.

Then check the following conditions:

$$M_{2N*} \cdot fB_{op} \cdot fB_t < M_{2N} \cdot S$$

$$P_N* < P_N$$

Operating factors

Run time	fB_t
Daily run time ≤ 8 h	1.00
Daily run time ≤ 16 h	1.15
Daily run time ≤ 24 h	1.20

Operating mode	Characteristic output curve	ED	fB_{op}	fB_{mot}
S1 Continuous operation with soft start • Start time up to 30 s	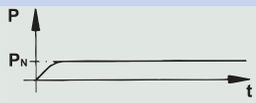	100 %	1.00	1.00
S1 Continuous operation with normal start • Asynchronous motors with direct switch-on or dynamic loading • Start time up to 30 s	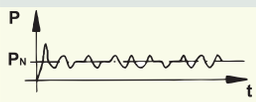	100 %	1.25	1.00
S1 Continuous operation with high-load start • Start time up to 30 s	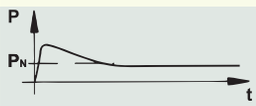	100 %	1.25	1.25
S2 brief operation • Operating time t_{op} ≤ 3 minutes	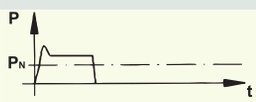	≤ 30 %	0.75	0.75
S3 Periodic cyclic operation	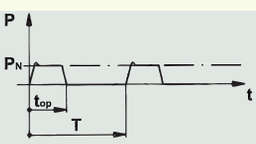	≤ 25 %	0.70	0.70
• Cycle time T ≤ 10 minutes		≤ 40 %	1.00	1.00
• Cyclic operation with braking motor		≤ 60 %	1.25	1.25
• Low additional flywheel weights $J_{1*} < 0,5 \cdot J_1$				
S4 Periodic cyclic operation with the effect of the start-up process • Cycle time T ≤ 10 minutes • Cyclic operation with braking motor • Larger additional flywheel weights	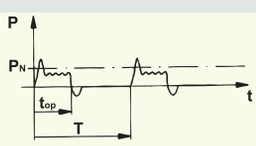	40 %	$J_{1*} \le J_1$: 1.40 $J_{1*} \sim 3 \cdot J_1$: 1.60	1.40
S6 Uninterrupted periodic operation	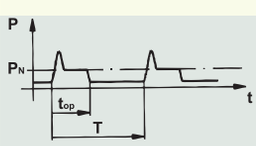	100 %	1.25	1.00
S6 Uninterrupted periodic operation with short-term loading • Low speeds • Low additional flywheel weights $J_{1*} < 0,5 \cdot J_1$	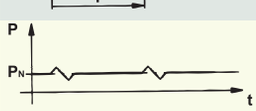	100 %	1.40	1.00
S6 Uninterrupted periodic operation with impact loading • High speeds • Large additional flywheel weights	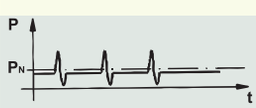	100 %	1.60	1.25
S8 Uninterrupted periodic operation • With load changes • With speed changes	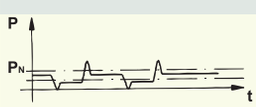	100 %	$J_{1*} \le J_1$: 1.40 $J_{1*} \sim 3 \cdot J_1$: 1.60	$J_{1*} \le J_1$: 1.25 $J_{1*} \sim 3 \cdot J_1$: 1.40
S9 Non-periodic operation • With load changes • With speed changes	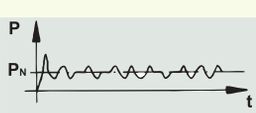	100 %	$J_{1*} \le J_1$: 1.40 $J_{1*} \sim 3 \cdot J_1$: 1.60	$J_{1*} \le J_1$: 1.25 $J_{1*} \sim 3 \cdot J_1$: 1.40
S10 Operation with individual constant loads	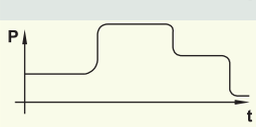	100 %	1.00	1.00

Tab. 1: Operating factors for operating modes S1 to S10

4.6.1 Permitted shaft loads for the output shaft

The values specified in the tables apply to the permitted shaft loads:

- For shaft dimensions in accordance with the catalog
- For output speeds $n_{2m*} \leq 20$ rpm ($F_{2axN} = F_{2ax20}$; $F_{2radN} = F_{2rad20}$; $M_{2kN} = M_{2k20}$)
- Only if radial forces on the gear unit are stabilized by its pilots for the pitch circle diameter and flange housing design

4.6.1.1 V shaft design

Permitted shaft loads for V shaft design (solid shaft)

Type	z_2 [mm]	F_{2ax20} [N]	F_{2rad20} [N]	$F_{2rad,acc}$ [N]	M_{2k20} [Nm]	$M_{2k,acc}$ [Nm]
K1	40.0	1900	5000	5000	360	360
K2	42.0	2100	6000	6000	430	430
K3	45.0	2400	7000	7000	525	525
K4	52.0	3500	11200	11200	1050	1050
K5	72.0	3500	13450	13450	1580	1580
K6	72.0	4000	16000	16000	1960	1960
K8	60.0	7250	29000	29000	3800	3800
K9	87.0	16500	65000	65000	11200	11200
K10	84.0	25000	80000	80000	15200	15200

Reduced values apply in the case of a V shaft design (solid shaft) in conjunction with an NF housing design (foot + round flange):

Type	z_2 [mm]	F_{2ax20} [N]	F_{2rad20} [N]	$F_{2rad,acc}$ [N]	M_{2k20} [Nm]	$M_{2k,acc}$ [Nm]
K10	132.0	25000	64000	64000	15200	15200

For the V solid shaft design on both sides, the values for F_{2rad20} and M_{2k20} must be multiplied by a factor of 0.7.

For other output speeds, download diagrams at http://configurator.stoeber.de.

The following applies to output speeds $n_{2m*} > 20$ rpm:

$$F_{2axN} = \frac{F_{2ax20}}{\sqrt[3]{\frac{n_{2m*}}{20\ \text{rpm}}}} \qquad F_{2radN} = \frac{F_{2rad20}}{\sqrt[3]{\frac{n_{2m*}}{20\ \text{rpm}}}} \qquad M_{2kN} = \frac{M_{2k20}}{\sqrt[3]{\frac{n_{2m*}}{20\ \text{rpm}}}}$$

The values for F_{2ax20}, F_{2rad20} and M_{2k20} can be found in the table "Permitted shaft loads" in this chapter.

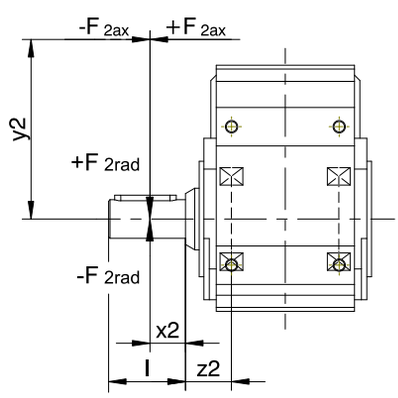

Fig. 1: Force application points for solid shaft

The specified values for F_{2rad20} are based on application of force at the middle of the output shaft: $x_2 = l/2$.

Shaft dimensions can be found in the "Dimensional drawings" chapter.

The following applies to other force application points:

$$M_{2k^*} = \frac{2 \cdot F_{2ax^*} \cdot y_2 + F_{2rad^*} \cdot (x_2 + z_2)}{1000} \leq M_{2kN}$$

$$F_{2rad^*} \leq F_{2radN}$$

$$F_{2ax^*} \leq F_{2axN}$$

For applications with multiple axial and/or radial forces, you must add the forces as vectors.

In the event of EMERGENCY OFF operation (max. 1000 load changes), you can multiply the permitted forces and torques for F_{2ax20}, F_{2rad20} and M_{2k20} by a factor of two.

4.6.1.2 A and S shaft design

Permitted shaft loads for A shaft design (hollow shaft with keyway)

Type	z_2	F_{2ax20}	F_{2rad20}	$F_{2rad,acc}$	M_{2k20}	$M_{2k,acc}$
	[mm]	[N]	[N]	[N]	[Nm]	[Nm]
K1	40.0	1900	5000	5000	240	240
K2	42.0	2100	6000	6000	310	310
K3	45.0	2400	7000	7000	380	380
K4	52.0	3500	11200	11200	740	740
K5	39.0	2500	13450	13450	1000	1000
K6	42.0	3000	16000	16000	1300	1300
K7	45.0	4100	22000	22000	2100	2100
K8	50.0	5300	29000	29000	2600	2600
K9	56.0	7000	65000	65000	3600	3600
K10	56.0	9000	80000	80000	5000	5000

Permitted shaft loads for S shaft design (hollow shaft with shrink ring)

Type	z_2	F_{2ax20}	F_{2rad20}	$F_{2rad,acc}$	M_{2k20}	$M_{2k,acc}$
	[mm]	[N]	[N]	[N]	[Nm]	[Nm]
K1	40.0	1900	5000	5000	240	240
K2	42.0	2100	6000	6000	310	310
K3	45.0	2400	7000	7000	380	380
K4	52.0	3500	11200	11200	740	740
K5	39.0	2500	13450	13450	1000	1000
K6	42.0	3000	16000	16000	1300	1300
K7	45.0	4100	22000	22000	2100	2100
K8	50.0	5300	29000	29000	2600	2600
K9	56.0	7000	65000	65000	3600	3600
K10	56.0	9000	80000	80000	5000	5000

For other output speeds, download diagrams at http://configurator.stoeber.de.

The following applies to output speeds n_{2m^*} > 20 rpm:

$$F_{2axN} = \frac{F_{2ax20}}{\sqrt[3]{\frac{n_{2m^*}}{20\ \text{rpm}}}} \qquad F_{2radN} = \frac{F_{2rad20}}{\sqrt[3]{\frac{n_{2m^*}}{20\ \text{rpm}}}} \qquad M_{2kN} = \frac{M_{2k20}}{\sqrt[3]{\frac{n_{2m^*}}{20\ \text{rpm}}}}$$

The values for F_{2ax20}, F_{2rad20} and M_{2k20} can be found in the table "Permitted shaft loads" in this chapter.

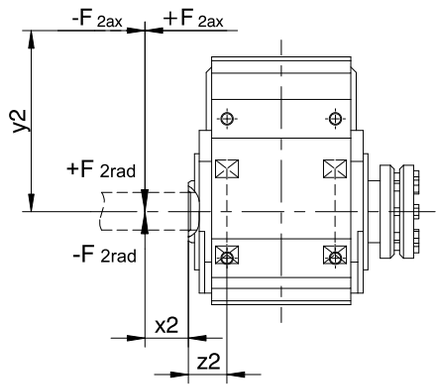

Fig. 2: Force application points for hollow shaft

You can determine the permitted radial forces from the permitted breakdown torque M_{2kN}. The actual radial forces may not exceed the permitted radial forces. The permitted radial forces are in relation to the end of the hollow shaft (x2 = 0).

$$M_{2k*} = \frac{2 \cdot F_{2ax*} \cdot y_2 + F_{2rad*} \cdot (x_2 + z_2)}{1000} \leq M_{2kN}$$

$$F_{2ax*} \leq F_{2axN}$$

For applications with multiple axial and/or radial forces, you must add the forces as vectors.

In the event of EMERGENCY OFF operation (max. 1000 load changes), you can multiply the permitted forces and torques for F_{2ax20}, F_{2rad20} and M_{2k20} by a factor of two.

4.6.2 Radial shaft seal rings

Leak-proofness

Our gear units are equipped with high-quality radial shaft seal rings and checked for leak-proofness. However, a leak cannot be fully ruled out over the length of use of a gear unit. If you use a gear unit with goods incompatible with the lubricant, you must take measures to prevent direct contact with the gear unit lubricant in case of a leak.

4.6.3 Oil expansion tank

The gear units have a higher fill level in mounting position EL5. The oil expansion tank prevents oil from escaping out of the gear unit.

Notes

- We recommend using an oil expansion tank in mounting position EL5 (additional cost) for fast running gear units with an input speed n_1 > 1750 rpm and gear ratios i < 20.
- It is not possible to use an oil expansion tank if the plug connector is at 90°!
- The oil expansion tank can only be used with certain sizes; see the chapter [▷ 4.3.17]

4.7 Additional documentation

Additional documentation related to the product can be found at http://www.stoeber.de/en/downloads/

Enter the ID of the documentation in the Search... field.

Documentation	ID
Operating manual for C/F/K/S gear units and gear motors	443027_en

5 Asynchronous motors

Table of contents

5.1 Overview ... 194

5.2 Selection tables ... 195

5.3 Dimensional drawings ... 197

5.3.1 Motors with self-ventilation ... 198

5.3.2 Motors with self-ventilation and encoder ... 199

5.3.3 Motors with forced ventilation ... 200

5.3.4 Motors with forced ventilation and encoder ... 201

5.4 Type designation ... 202

5.5 Product description ... 202

5.5.1 General features ... 202

5.5.2 Electrical features ... 202

5.5.3 Ambient conditions ... 203

5.5.4 Encoders ... 203

5.5.5 PTC thermistor ... 204

5.5.6 Cooling ... 205

5.5.7 Brake ... 205

5.5.8 Connection method ... 208

5.6 Project configuration ... 211

5.6.1 Legal requirements ... 211

5.6.2 Operation on a drive controller ... 212

5.7 Further information ... 213

5.7.1 Directives and standards ... 213

5.7.2 Marks and test symbols ... 214

5.7.3 Additional documentation ... 214

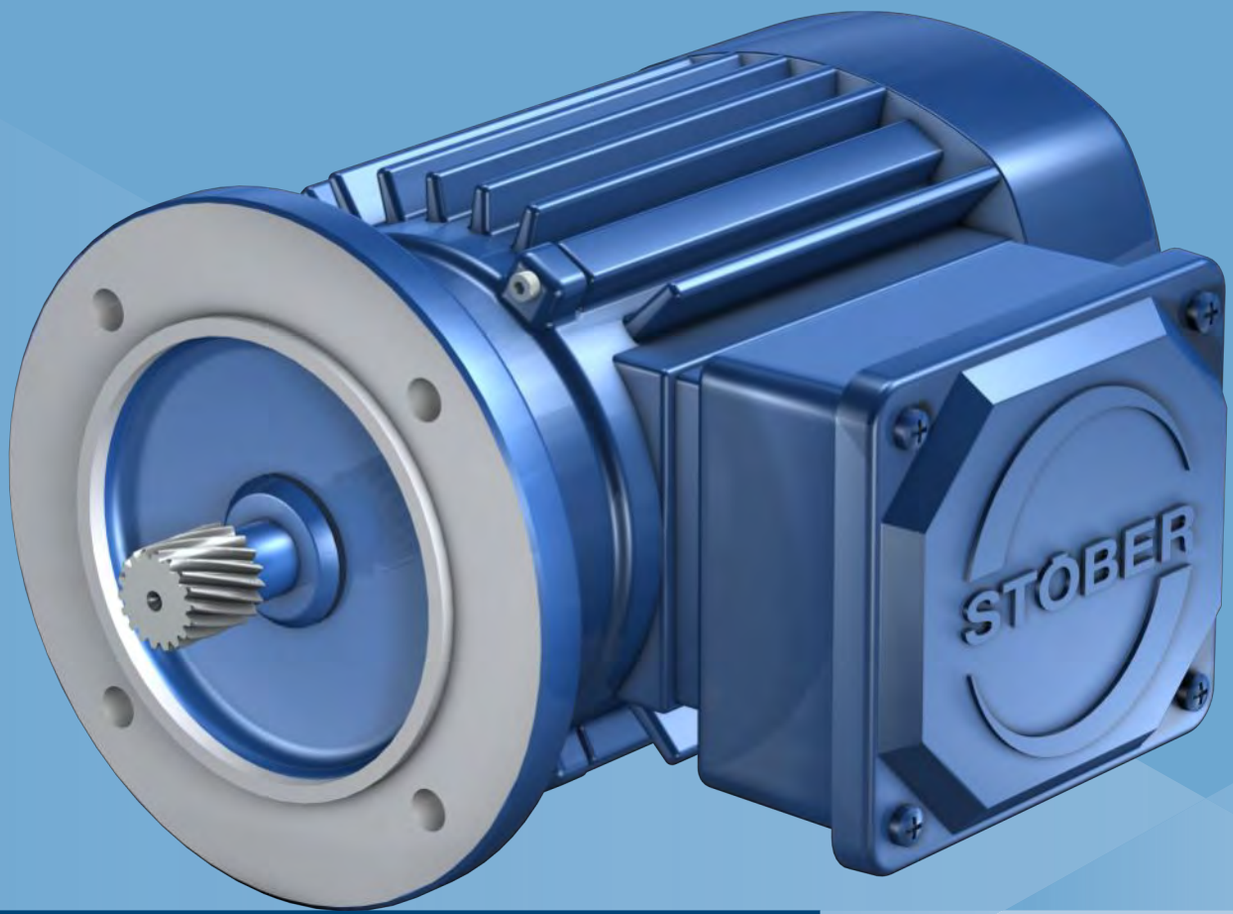

5 Asynchronous motors

5.1 Overview

Asynchronous motors

Features

Self-ventilation or forced ventilation (optional)	✓
Spring-loaded brake (optional)	✓
Incremental encoder (optional) or SSI absolute encoder (optional)	✓
Elimination of referencing with multi-turn absolute encoders (optional)	✓
Terminal box	✓
Energy efficiency class IE3 in accordance with EN 60034-30-1 starting from 0.75 kW	✓

Technical data (400 V ± 10%, 50 Hz)

n_2	1360 – 2920 rpm
P_N	0.12 – 45 kW
M_N	0.62 – 290 Nm
I_N	0.44 – 84 A

5.2 Selection tables

The technical data specified in the following selection table applies to:

- Installation altitudes up to 1000 m above sea level
- Surrounding temperatures from 0 °C to 40 °C
- 230 / 400 V AC nominal voltage
- 50 Hz nominal frequency
- Number of poles: 2 or 4

For technical data for other motor designs, go to http://configurator.stoeber.de.

An explanation of the formula symbols can be found in the chapter [▶ 13.1].

Observe the legal requirements in the chapter [▶ 5.6.1].

The type designation for the motors in this product catalog and on the nameplate of the motor are different. The allocation is shown in the following table.

Type on nameplate	Type in catalog
K21R 63 K4	D063K04
K21R 63 K2	D063K02
K21R 63 G4	D063M04
K21R 63 G2	D063M02
K21R 71 K4	D071K04
K21R 71 K2	D071K02
K21R 71 G4	D071L04
K21R 71 G2	D071L02
K21R 80 K4	D080K04
IE3-W42R 80 K2	IE3D080K02
IE3-W41R 80 G4	IE3D080L04
IE3-W41R 80 G2	IE3D080LX02
IE3-W41R 90 SY4	IE3D090S04
IE3-W42R 90 S2	IE3D090S02
IE3-W41R 90 LX4	IE3D090LX04
IE3-W41R 90 LY2	IE3D090L02
IE3-W41R 100 L4	IE3D100KX04
IE3-W41R 100 LY2	IE3D100L02
IE3-W41R 100 LU4	IE3D100LX04
IE3-W41R 112 MY2	IE3D112M02
IE3-W41R 112 MW4	IE3D112M04
IE3-W41R 132 S4	IE3D132S04
IE3-W41R 132 M4	IE3D132M04
IE3-W41R 160 M4	IE3D160M04
IE3-W41R 160 L4C	IE3D160L04
IE3-W41R 180 M4	IE3D180M04
IE3-W41R 180 L4	IE3D180L04
IE3-W41R 200 L4C	IE3D200L04
IE3-W41R 225 S4C	IE3D225S04
IE3-W41R 225 M4	IE3D225M04

The technical data for the motors can be found in the following selection table.

Motors, 4-pole:

Type	Y/Δ	η [%] 100%	η [%] 75%	η [%] 50%	cosϕ$_N$	P$_N$ [kW]	n$_N$ [rpm]	I$_N$ [A]	M$_N$ [Nm]	I$_{1mot}$/ I$_N$	M$_{1mot}$/ M$_N$	M$_k$/ M$_N$	J [10^{-4} kgm^2]	m [kg]
D063K04	Y	57.50	56.70	–	0.68	0.12	1370	0.44	0.84	3.2	1.9	2.2	1.9	4.8
D063M04	Y	61.00	56.50	–	0.66	0.18	1360	0.65	1.26	3.3	2.0	2.3	2.4	5.2
D071K04	Y	64.60	62.30	–	0.72	0.25	1385	0.78	1.72	3.6	1.8	2.1	4.0	6.8
D071L04	Y	67.80	66.90	–	0.74	0.37	1370	1.06	2.58	3.8	2.0	2.2	5.0	7.8
D080K04	Y	71.50	69.30	–	0.69	0.55	1400	1.60	3.75	4.1	2.1	2.3	8.7	10.6
IE3D080L04	Y	82.50	82.30	80.00	0.77	0.75	1445	1.70	5.00	7.0	3.1	3.7	26.0	17.0
IE3D090S04	Y	84.10	82.60	80.00	0.76	1.10	1440	2.50	7.30	6.7	2.8	3.7	40.0	22.5
IE3D090LX04	Y	85.30	85.80	83.00	0.75	1.50	1455	3.40	9.80	9.5	4.5	4.9	58.0	31.0
IE3D100KX04	Y	86.70	87.00	85.00	0.81	2.20	1450	4.55	14.50	8.2	2.9	3.8	110.0	45.0
IE3D100LX04	Y	87.70	88.80	88.00	0.77	3.00	1450	6.35	19.80	7.7	3.0	4.0	130.0	50.0
IE3D112M04	Δ	88.60	88.90	87.00	0.82	4.00	1465	7.90	26.10	9.4	3.0	4.5	170.0	56.0
IE3D132S04	Δ	91.00	90.20	88.00	0.73	5.50	1480	12.00	35.00	9.9	3.4	5.4	350.0	90.0
IE3D132M04	Δ	91.30	91.30	90.00	0.83	7.50	1475	14.50	49.00	8.6	2.4	3.9	430.0	100.0
IE3D160M04	Δ	91.40	91.50	90.00	0.83	11.00	1475	21.00	71.00	7.5	2.5	3.2	780.0	125.0
IE3D160L04	Δ	92.80	92.50	91.00	0.83	15.00	1490	28.00	96.00	10.5	2.8	3.9	1567.0	175.0
IE3D180M04	Δ	92.70	92.90	92.00	0.84	18.50	1475	34.50	120.00	6.9	1.9	3.0	1680.0	210.0
IE3D180L04	Δ	93.00	93.00	92.00	0.84	22.00	1480	40.50	142.00	7.6	2.2	3.2	2030.0	240.0
IE3D200L04	Δ	93.60	92.40	92.00	0.85	30.00	1485	54.50	193.00	7.0	1.6	2.6	4110.0	327.0
IE3D225S04	Δ	93.90	93.80	93.00	0.85	37.00	1490	67.00	237.00	7.4	1.9	2.7	4675.0	367.0
IE3D225M04	Δ	94.20	94.30	94.00	0.82	45.00	1482	84.00	290.00	8.1	2.6	2.6	6190.0	450.0

Motors, 2-pole:

Type	Y/Δ	η [%] 100%	η [%] 75%	η [%] 50%	cosϕ$_N$	P$_N$ [kW]	n$_N$ [rpm]	I$_N$ [A]	M$_N$ [Nm]	I$_{1mot}$/ I$_N$	M$_{1mot}$/ M$_N$	M$_k$/ M$_N$	J [10^{-4} kgm^2]	m [kg]
D063K02	Y	67.10	63.10	–	0.76	0.18	2790	0.50	0.62	4.1	1.9	2.2	1.3	4.9
D063M02	Y	68.10	65.60	–	0.72	0.25	2800	0.74	0.85	4.2	2.2	2.4	1.5	5.2
D071K02	Y	71.50	69.70	–	0.79	0.37	2780	0.94	1.27	4.4	2.1	2.3	2.5	6.7
D071L02	Y	74.30	72.70	–	0.81	0.55	2775	1.32	1.89	5.1	2.3	2.6	3.2	7.6
IE3D080K02	Y	80.70	80.70	78.00	0.81	0.75	2870	1.65	2.50	6.4	2.6	3.5	7.2	11.5
IE3D080LX02	Y	82.70	82.10	81.00	0.89	1.10	2885	2.15	3.60	7.8	2.5	2.8	17.0	18.0
IE3D090S02	Y	84.20	85.40	83.00	0.81	1.50	2900	3.12	4.90	7.9	3.5	4.4	17.0	19.0
IE3D090L02	Y	85.90	85.70	84.00	0.88	2.20	2880	4.25	7.30	8.0	2.5	2.9	27.5	23.5
IE3D100L02	Y	87.10	86.90	85.00	0.82	3.00	2920	6.00	9.80	7.7	2.3	3.5	45.0	31.0
IE3D112M02	Δ	88.10	87.50	87.00	0.84	4.00	2920	7.90	13.10	8.3	2.3	3.3	55.0	38.0

5.3 Dimensional drawings

In the following dimensional drawings, motors are shown with an output flange for direct attachment onto STOBER gear units. Note that other dimensions may apply to motors with IEC output flange, cURus test symbol or EISA 2007 certification in some cases. You can find corresponding dimensional drawings at http://configurator.stoeber.de.

For IE3D080 – IE3D112 motors, the center of the terminal box is not at the center line of the motor axis.

Dimensions can exceed the specifications of ISO 2768-mK due to casting tolerances or accumulation of individual tolerances.

We reserve the right to make dimensional changes due to ongoing technical development.

You can download 3D models of our standard drives at http://configurator.stoeber.de.

5.3.1 Motors with self-ventilation

In the following dimensional drawings, motors are shown with an output flange for direct attachment onto STOBER gear units. Note that other dimensions may apply to motors with IEC output flange, cURus test symbol or EISA 2007 certification in some cases. You can find corresponding dimensional drawings at http://configurator.stoeber.de.

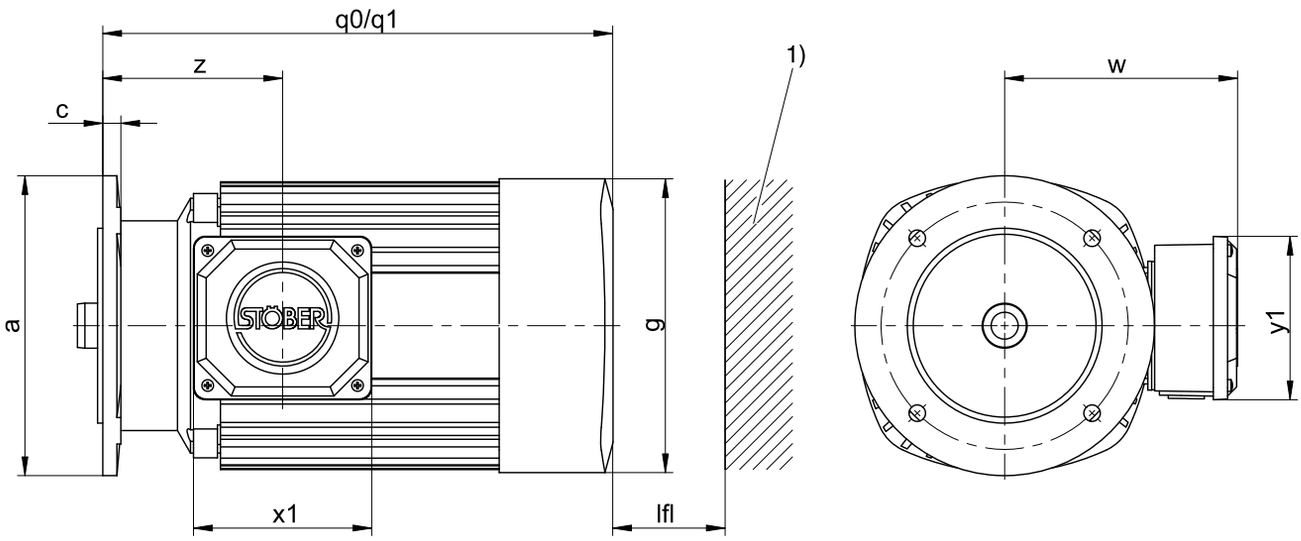

q0 Applies to motors without brake

q1 Applies to motors with brake

1) Machine wall

Type	pz	Øa	c	g	lfl	q0	q1	w	x1	y1	z
D063K04	4	140	10	109	14	179	231	115	109	97	81
D063K02	2	140	10	109	14	179	231	115	109	97	81
D063M04	4	140	10	109	14	179	231	115	109	97	81
D063M02	2	140	10	109	14	179	231	115	109	97	81
D071K04	4	140	11	124	14	208	260	120	109	97	94
D071K02	2	140	11	124	14	208	260	120	109	97	94
D071L04	4	140	11	124	14	208	260	120	109	97	94
D071L02	2	140	11	124	14	208	260	120	109	97	94
D080K04	4	160	11	139	16	238	295	128	109	97	97
IE3D080K02	2	160	11	139	16	238	295	128	109	97	97
IE3D080L04	4	160	11	157	16	283	351	137	109	97	107
IE3D080LX02	2	160	11	157	16	283	351	137	109	97	107
IE3D090S04	4	160	11	177	18	310	380	146	120	109	114
IE3D090S02	2	160	11	157	18	283	351	137	120	109	107
IE3D090LX04	4	160	11	177	18	365	435	146	120	109	114
IE3D090L02	2	160	11	177	18	310	380	146	120	109	114
IE3D100KX04	4	200	12	196	20	404	491	155	120	109	120
IE3D100L02	2	200	12	196	20	340	427	155	120	109	120
IE3D100LX04	4	200	12	196	20	444	531	155	120	109	120
IE3D112M02	2	200	12	196	20	374	461	155	120	109	120
IE3D112M04	4	200	12	217	35	424	521	178	147	157	134
IE3D132S04	4	250	11	258	35	476	591	199	147	157	142
IE3D132M04	4	250	11	258	35	526	641	199	147	157	142
IE3D160M04	4	300	12	313	35	461	589	242	167	194	138
IE3D160L04	4	300	12	313	35	549	677	242	167	194	138
IE3D180M04	4	300	16	351	35	601	748	260	167	194	178
IE3D180L04	4	300	16	351	35	651	798	260	167	194	178
IE3D200L04	4	350	20	390	35	729	878	298	207	209	242
IE3D225S04	4	400	15	390	40	706	855	300	207	209	169
IE3D225M04	4	400	20	440	45	838	986	324	207	209	242

5.3.2 Motors with self-ventilation and encoder

In the following dimensional drawings, motors are shown with an output flange for direct attachment onto STOBER gear units. Note that other dimensions may apply to motors with IEC output flange, cURus test symbol or EISA 2007 certification in some cases. You can find corresponding dimensional drawings at http://configurator.stoeber.de.

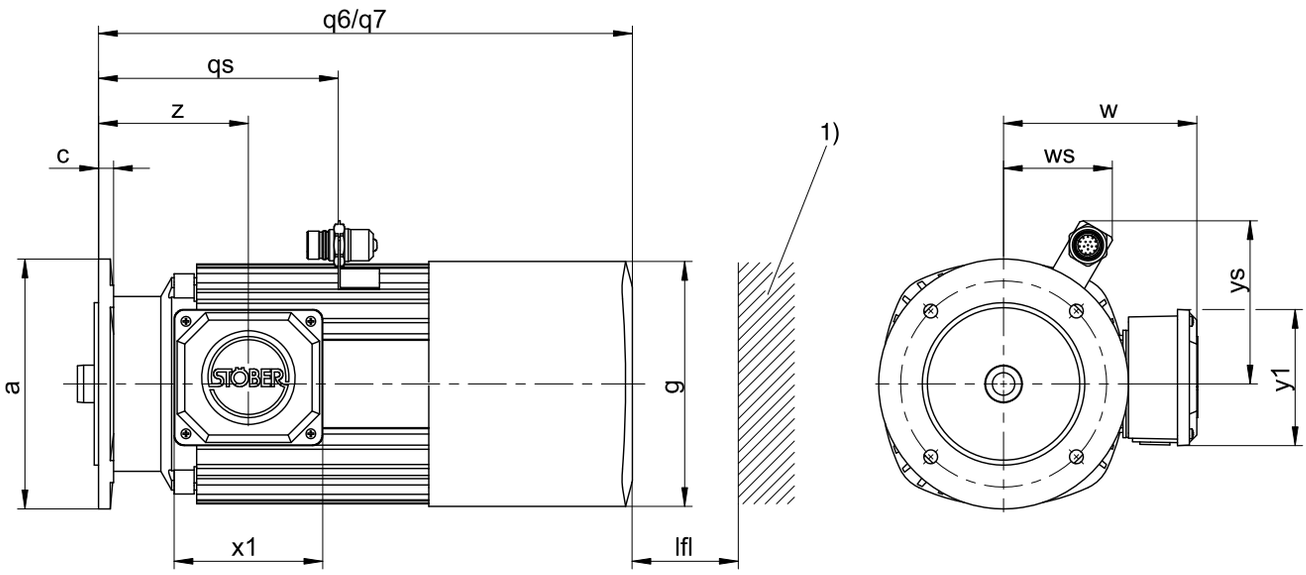

q6 Applies to motors without brake

q7 Applies to motors with brake

1) Machine wall

Type	pz	Øa	c	g	lfl	q6	q7	qs	w	ws	x1	y1	ys	z
D063K04	4	140	10	109	14	231	285	111	115	58	109	97	83	81
D063K02	2	140	10	109	14	231	285	111	115	58	109	97	83	81
D063M04	4	140	10	109	14	231	285	111	115	58	109	97	83	81
D063M02	2	140	10	109	14	231	285	111	115	58	109	97	83	81
D071K04	4	140	11	124	14	260	315	123	120	63	109	97	90	94
D071K02	2	140	11	124	14	260	315	123	120	63	109	97	90	94
D071L04	4	140	11	124	14	260	315	123	120	63	109	97	90	94
D071L02	2	140	11	124	14	260	315	123	120	63	109	97	90	94
D080K04	4	160	11	139	16	295	354	126	128	67	109	97	97	97
IE3D080K02	2	160	11	139	16	295	353	172	128	77	109	97	113	97
IE3D080L04	4	160	11	157	16	351	408	172	137	77	109	97	113	107
IE3D080LX02	2	160	11	157	16	351	408	172	137	77	109	97	113	107
IE3D090S04	4	160	11	177	18	380	437	186	146	82	120	109	121	114
IE3D090S02	2	160	11	157	18	351	408	186	137	82	120	109	121	107
IE3D090LX04	4	160	11	177	18	435	492	186	146	82	120	109	121	114
IE3D090L02	2	160	11	177	18	380	437	186	146	82	120	109	121	114
IE3D100KX04	4	200	12	196	20	491	543	192	155	87	120	109	131	120
IE3D100L02	2	200	12	196	20	427	479	192	155	87	120	109	131	120
IE3D100LX04	4	200	12	196	20	531	583	192	155	87	120	109	131	120
IE3D112M02	2	200	12	196	20	461	513	192	155	87	120	109	131	120
IE3D112M04	4	200	12	217	35	521	569	–	178	–	147	157	–	134
IE3D132S04	4	250	11	258	35	591	706	213	199	102	147	157	145	142
IE3D132M04	4	250	11	258	35	641	756	213	199	102	147	157	145	142
IE3D160M04	4	300	12	313	35	589	717	285	242	123	167	194	166	138
IE3D160L04	4	300	12	313	35	677	805	285	242	123	167	194	166	138
IE3D180M04	4	300	16	351	35	748	895	326	260	136	167	194	179	178
IE3D180L04	4	300	16	351	35	798	945	326	260	136	167	194	179	178
IE3D200L04	4	350	20	390	35	878	1026	361	298	155	207	209	198	242
IE3D225S04	4	400	15	390	40	855	1003	399	300	155	207	209	198	169
IE3D225M04	4	400	20	440	45	986	1090	472	324	180	207	209	223	242

5.3.3 Motors with forced ventilation

In the following dimensional drawings, motors are shown with an output flange for direct attachment onto STOBER gear units. Note that other dimensions may apply to motors with IEC output flange, cURus test symbol or EISA 2007 certification in some cases. You can find corresponding dimensional drawings at http://configurator.stoeber.de.

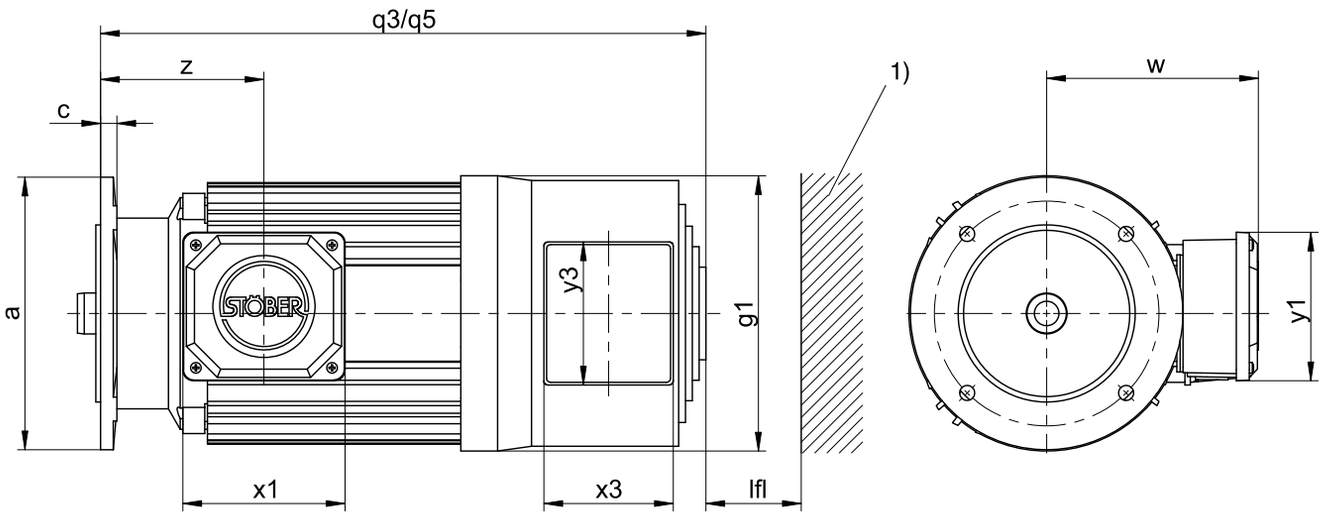

q3 Applies to motors without brake

q5 Applies to motors with brake

1) Machine wall

Type	pz	Øa	c	g1	lfl	q3	q5	w	x1	x3	y1	y3	z
D063K04	4	140	10	115	14	286	340	115	109	109	97	97	81
D063K02	2	140	10	115	14	286	340	115	109	109	97	97	81
D063M04	4	140	10	115	14	286	340	115	109	109	97	97	81
D063M02	2	140	10	115	14	286	340	115	109	109	97	97	81
D071K04	4	140	11	131	14	324	378	120	109	109	97	97	94
D071K02	2	140	11	131	14	324	378	120	109	109	97	97	94
D071L04	4	140	11	131	14	324	378	120	109	109	97	97	94
D071L02	2	140	11	131	14	324	378	120	109	109	97	97	94
D080K04	4	160	11	146	16	354	409	128	109	109	97	97	97
IE3D080K02	2	160	11	146	16	343	388	128	109	95	97	105	97
IE3D080L04	4	160	11	162	16	384	443	137	109	95	97	105	107
IE3D080LX02	2	160	11	162	16	384	443	137	109	95	97	105	107
IE3D090S04	4	160	11	180	18	416	467	146	120	95	109	105	114
IE3D090S02	2	160	11	162	18	384	443	137	120	95	109	105	107
IE3D090LX04	4	160	11	180	18	471	522	146	120	95	109	105	114
IE3D090L02	2	160	11	180	18	416	467	146	120	95	109	105	114
IE3D100KX04	4	200	12	202	20	508	590	155	120	95	109	105	120
IE3D100L02	2	200	12	202	20	445	526	155	120	95	109	105	120
IE3D100LX04	4	200	12	202	20	548	630	155	120	95	109	105	120
IE3D112M02	2	200	12	202	20	478	560	155	120	95	109	105	120
IE3D112M04	4	200	12	217	35	514	559	178	147	95	157	105	134
IE3D132S04	4	250	11	258	35	615	715	199	147	95	157	105	142
IE3D132M04	4	250	11	258	35	665	765	199	147	95	157	105	142
IE3D160M04	4	300	12	313	35	637	747	242	167	95	194	105	138
IE3D160L04	4	300	12	313	35	725	835	242	167	95	194	105	138
IE3D180M04	4	300	16	351	35	774	910	260	167	95	194	105	178
IE3D180L04	4	300	16	351	35	824	960	260	167	95	194	105	178
IE3D200L04	4	350	20	390	35	923	1108	298	207	95	209	105	242
IE3D225S04	4	400	15	390	40	900	1085	300	207	95	209	105	169
IE3D225M04	4	400	20	440	45	993	1143	324	207	95	209	105	242

5.3.4 Motors with forced ventilation and encoder

In the following dimensional drawings, motors are shown with an output flange for direct attachment onto STOBER gear units. Note that other dimensions may apply to motors with IEC output flange, cURus test symbol or EISA 2007 certification in some cases. You can find corresponding dimensional drawings at http://configurator.stoeber.de.

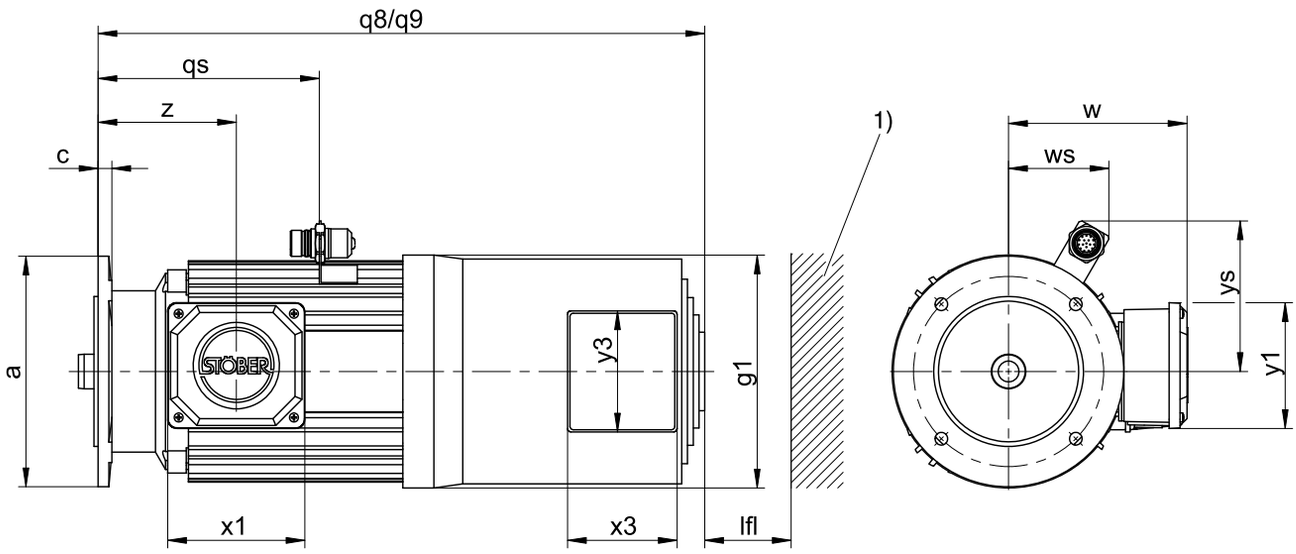

q8 Applies to motors without brake

q9 Applies to motors with brake

1) Machine wall

Type	pz	Øa	c	g1	lfl	q8	q9	qs	w	ws	x1	x3	y1	y3	ys	z
D063K04	4	140	10	115	14	340	392	111	115	58	109	109	97	97	83	81
D063K02	2	140	10	115	14	340	392	111	115	58	109	109	97	97	83	81
D063M04	4	140	10	115	14	340	392	111	115	58	109	109	97	97	83	81
D063M02	2	140	10	115	14	340	392	111	115	58	109	109	97	97	83	81
D071K04	4	140	11	131	14	378	427	123	120	63	109	109	97	97	90	94
D071K02	2	140	11	131	14	378	427	123	120	63	109	109	97	97	90	94
D071L04	4	140	11	131	14	378	427	123	120	63	109	109	97	97	90	94
D071L02	2	140	11	131	14	378	427	123	120	63	109	109	97	97	90	94
D080K04	4	160	11	146	16	409	464	126	128	67	109	109	97	97	97	97
IE3D080K02	2	160	11	146	16	388	423	172	128	77	109	95	97	105	113	97
IE3D080L04	4	160	11	162	16	443	473	172	137	77	109	95	97	105	113	107
IE3D080LX02	2	160	11	162	16	443	473	172	137	77	109	95	97	105	113	107
IE3D090S04	4	160	11	180	18	467	517	186	146	82	120	95	109	105	121	114
IE3D090S02	2	160	11	162	18	443	473	186	137	82	120	95	109	105	121	107
IE3D090LX04	4	160	11	180	18	522	608	186	146	82	120	95	109	105	121	114
IE3D090L02	2	160	11	180	18	467	517	186	146	82	120	95	109	105	121	114
IE3D100KX04	4	200	12	202	20	590	618	192	155	87	120	95	109	105	131	120
IE3D100L02	2	200	12	202	20	526	554	192	155	87	120	95	109	105	131	120
IE3D100LX04	4	200	12	202	20	630	658	192	155	87	120	95	109	105	131	120
IE3D112M02	2	200	12	202	20	560	588	192	155	87	120	95	109	105	131	120
IE3D112M04	4	200	12	217	35	559	624	–	178	–	147	95	157	105	–	134
IE3D132S04	4	250	11	258	35	715	815	213	199	102	147	95	157	105	145	142
IE3D132M04	4	250	11	258	35	765	865	213	199	102	147	95	157	105	145	142
IE3D160M04	4	300	12	313	35	747	847	285	242	123	167	95	194	105	166	138
IE3D160L04	4	300	12	313	35	835	935	285	242	123	167	95	194	105	166	138
IE3D180M04	4	300	16	351	35	910	1010	326	260	136	167	95	194	105	179	178
IE3D180L04	4	300	16	351	35	960	1060	326	260	136	167	95	194	105	179	178
IE3D200L04	4	350	20	390	35	1108	1216	361	298	155	207	95	209	105	198	242
IE3D225S04	4	400	15	390	40	1085	1193	399	300	155	207	95	209	105	198	169
IE3D225M04	4	400	20	440	45	1143	1243	472	324	180	207	95	209	105	223	242

5.4 Type designation

IE3	D	080	K	04

Explanation

Code	Designation	Design
IE3	Energy efficiency class in accordance with EN 60034-30-1	IE3
D	Type	Asynchronous motor
080	Size	80 (example)
K	Length	Short
L/LX		Long
M		Medium
S		Small
02	Number of poles	2
04		4

The type designation on the motor nameplate differs from the type designation in the product catalog. The allocation can be found in the Selection Tables chapter.

In order to complete the type designation, also specify:

- With IEC output flange or for direct attachment to STOBER gear units?
- With spring-loaded brake? (see the chapter [▶ 5.5.7])?
- With cURUs test symbol option?
- With EISA 2007 certification option?
- With forced ventilation option (see the chapter [▶ 5.5.6.1])?
- With forced ventilation and encoder option (see the chapter Encoders)?
- Side for cable entry (see the chapter [▶ 5.5.8.1])

5.5 Product description

5.5.1 General features

Feature	Description
Design	IM B5, IM V1, IM V3 in accordance with EN 60034-7
Protection class	IP54
Thermal class	155 (F) in accordance with EN 60034-1 (155 °C, heating $\Delta\vartheta$ = 100 K)
Cooling	IC 411 self-ventilation IC 416 forced ventilation (option)
Paint	RAL 7035 light gray Optional selection of various RAL colors.
Bearing	Rolling bearing with lifetime lubrication
Vibration intensity	A in accordance with EN 60034-14
Noise level	Limit values in accordance with EN 60034-9

5.5.2 Electrical features

General electrical features of the asynchronous motors are described in this chapter. Details can be found in the "Selection tables" chapter.

Motors D063 – D080, IE3D080 – IE3D100

	50 Hz	60 Hz
Nominal voltage	Delta connection: AC 230 V Star connection: AC 400 V	Delta connection: AC 265 V Star connection: AC 460 V
Voltage range	Delta connection: AC 220 – 240 V Star connection: AC 380 – 420 V	Delta connection: AC 220 – 275 V Star connection: AC 380 – 480 V

IE3D112 – IE3D225 motors

	50 Hz	60 Hz
Nominal voltage	Delta connection: AC 400 V	Delta connection: AC 460 V
Voltage range	Delta connection: AC 380 – 420 V	Delta connection: AC 380 – 480 V

5.5.3 Ambient conditions

Standard ambient conditions for transport, storage and operation of the motor are described in this chapter.

Feature	Description
Surrounding temperature for transport/storage	−30 °C to +85 °C
Surrounding temperature for operation	−15 °C to +40 °C
Installation altitude	≤ 1000 m above sea level
Shock load	≤ 50 m/s² (5 g), 6 ms in accordance with EN 60068-2-27

Notes

- STOBER Asynchronous motors are not suitable for potentially explosive atmospheres in accordance with (ATEX) Directive2014/34/EU. You can get asynchronous motors for use in potentially explosive atmospheres on request.
- Secure the connection cables close to the motor so that cable vibrations do not place impermissible loads on the screw connections, terminal boxes or plug connectors.
- Also take into consideration the shock load of the motor due to output units (such as gear units and pumps) which are coupled with the motor.

5.5.4 Encoders

Asynchronous motors with forced ventilation can optionally be equipped with an incremental or absolute encoder. Self-ventilated asynchronous motors are optionally available with an incremental encoder. The encoder connection method is described in Chapter [▷ 5.5.8].

5.5.4.1 Incremental encoders

Incremental encoder technical data can be found in this chapter.

Feature	Description
Sensing principle	Optical
Pulses per revolution	2048
Reference signal	Zero pulse
TTL output level	RS422
HTL output level	Push-pull
TTL operating voltage	DC 5 V ± 5%
HTL operating voltage	DC 8 – 30 V

5.5.4.2 Multi-turn absolute encoders

Multi-turn absolute encoder technical data can be found in this chapter. This encoder is used to detect several revolutions of the motor shaft, making it possible to reduce the amount of referencing.

Technical Data

Feature	Description
Type	EQN 425
Interface	SSI
Code	Gray
Position values per revolution	8192 (13 bits)
Recordable revolutions	4096 (12 bits)
Operating voltage	DC 4.75 – 30 V

5.5.5 PTC thermistor

In this chapter, you can find technical data on the PTC thermistor that can optionally be installed in STOBER asynchronous motors for implementing thermal winding protection. To prevent damage to the motor, always monitor the PTC thermistor with appropriate devices that will turn off the motor if the maximum permitted winding temperature is exceeded.

The PTC thermistor is a triple thermistor in accordance with DIN 44082 that allows the temperature of each winding phase to be monitored. The resistance values in the following table and curve refer to a single thermistor in accordance with DIN 44081. These values must be multiplied by 3 for a triple thermistor in accordance with DIN 44082.

Feature	Description
Nominal response temperature ϑ_{NAT}	145 °C ± 5 K
Resistance R −20 °C up to ϑ_{NAT} − 20 K	≤ 250 Ω
Resistance R with ϑ_{NAT} − 5 K	≤ 550 Ω
Resistance R with ϑ_{NAT} + 5 K	≥ 1330 Ω
Resistance R with ϑ_{NAT} + 15 K	≥ 4000 Ω
Operating voltage	≤ DC 7.5 V
Thermal response time	< 5 s
Thermal class	155 (F) in accordance with EN 60034-1 (155 °C, heating Δϑ = 100 K)

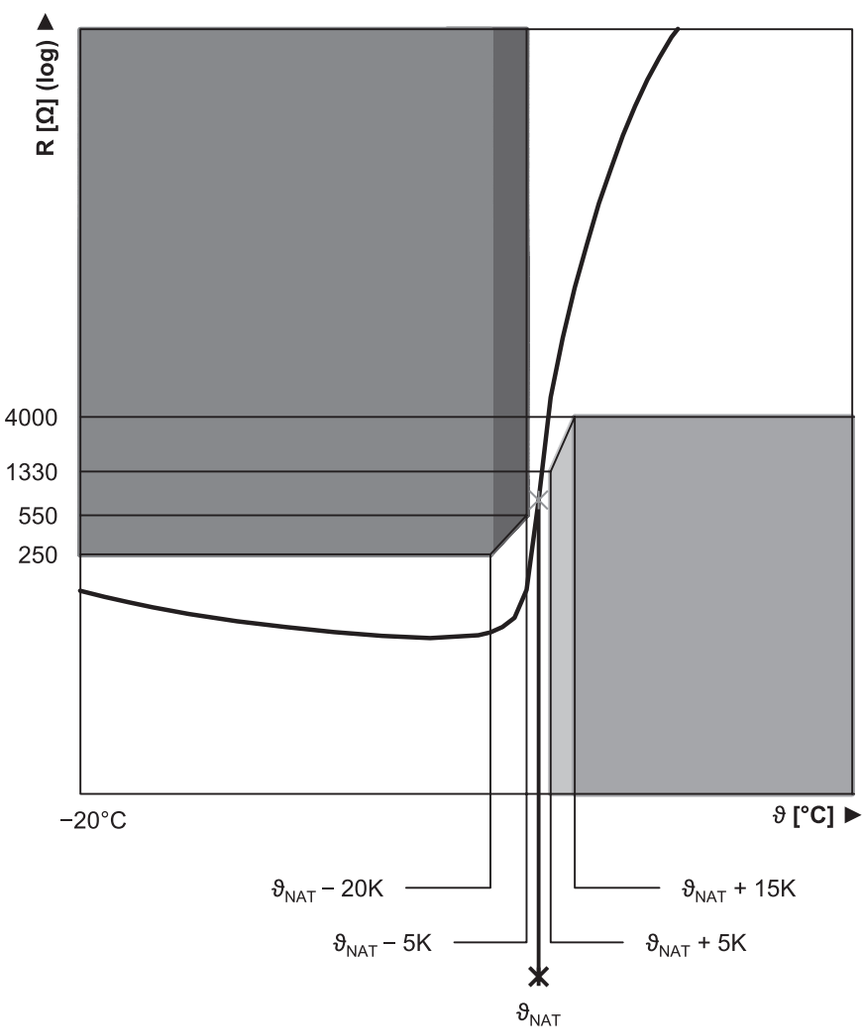

Fig. 1: PTC thermistor curve (single thermistor)

5.5.6 Cooling

STOBER asynchronous motors in the standard design are cooled using the impeller installed on the motor shaft (self-ventilation). In this process, the motor waste heat is transported away by the air aspirated by the impeller and blown over the motor cooling fins.

5.5.6.1 Forced ventilation

STOBER asynchronous motors can be equipped with an optional forced ventilation unit. This may be necessary at low speeds or for operation on a drive controller in order to ensure cooling independent of the motor speed. A forced ventilation unit can also be added later. The performance data for motors with forced ventilation can be found in Chapter [▶ 5.2] and the dimensional drawings in Chapter [▶ 5.3].

Technical data (50 Hz)

Motor	Type	$U_{N,F}$ [V]	$I_{N,F}$ [A]	$\cos\varphi_F$	n_F [rpm]	q_{vF} [m³/h]	$L_{pA,F}$ [dBA]	C_F [µF]
D063K02.D063K04.D063M02.D063M04	FL-63	Δ_C	0.3	0.90	2830	55	35	3
D063K02.D063K04.D063M02.D063M04	FL-63	Δ 220–240 / Y 380–420	0.30/0.17	0.56	2700	55	35	–
D071K02.D071K04.D071L02.D071L04	FL-71	Δ_C	0.3	0.90	2830	78	35	3
D071K02.D071K04.D071L02.D071L04	FL-71	Δ 220–240 / Y 380–420	0.30/0.17	0.56	2700	78	35	–
D080K04	FL-80	Δ_C	0.3	0.90	2830	103	35	3
D080K04	FL-80	Δ 220–240 / Y 380–420	0.30/0.17	0.56	2700	103	35	–
IE3D080K02.IE3D080L04.IE3D080LX02	FL-90	Δ_C	0.29	0.91	2845	200	58	3
IE3D080K02.IE3D080L04.IE3D080LX02	FL-90	Δ 220–240 / Y 380–420	0.38/0.22	0.56	2865	200	58	–
IE3D090L02.IE3D090LX04.IE3D090S02.IE3D090S04	FL-100	Δ_C	0.28	0.96	2732	260	59	3
IE3D090L02.IE3D090LX04.IE3D090S02.IE3D090S04	FL-100	Δ 220–240 / Y 380–420	0.37/0.22	0.66	2803	260	59	–
IE3D100KX04.IE3D100L02.IE3D100LX04.IE3D112M02.IE3D112M04	FL-112	Δ_C	0.28	0.99	2480	337	61	3
IE3D100KX04.IE3D100L02.IE3D100LX04.IE3D112M02.IE3D112M04	FL-112	Δ 220–240 / Y 380–420	0.35/0.20	0.74	2733	337	61	–
IE3D132M04.IE3D132S04	FL-132/132	Δ_C	0.4	1.00	2610	532	69	6
IE3D132M04.IE3D132S04	FL-132/132	Δ 220–240 / Y 380–420	0.58/0.33	0.83	2700	532	69	–

Technical data for force-ventilated motors of size 160 or larger are available on request.

Technical data (60 Hz)

Motor	Type	$U_{N,F}$ [V]	$I_{N,F}$ [A]	$\cos\varphi_F$	n_F [rpm]	q_{vF} [m³/h]	$L_{pA,F}$ [dBA]	C_F [µF]
D080K04	FL-80	Δ_C	0.28	0.96	3410	133	35	3
D080K04	FL-80	Δ 220–275 / Y 380–480	0.26/0.15	0.63	3240	133	35	–
IE3D080K02.IE3D080L04.IE3D080LX02	FL-90	Δ_C	0.25	0.99	3279	240	66	3
IE3D080K02.IE3D080L04.IE3D080LX02	FL-90	Δ 220–275 / Y 380–480	0.33/0.19	0.72	3327	240	66	–
IE3D090L02.IE3D090LX04.IE3D090S02.IE3D090S04	FL-100	Δ_C	0.3	0.99	2734	310	70	3
IE3D090L02.IE3D090LX04.IE3D090S02.IE3D090S04	FL-100	Δ 220–275 / Y 380–480	0.31/0.18	0.84	3171	310	70	–
IE3D100KX04.IE3D100L02.IE3D100LX04.IE3D112M02.IE3D112M04	FL-112	Δ_C	0.37	0.99	1979	411	70	3
IE3D100KX04.IE3D100L02.IE3D100LX04.IE3D112M02.IE3D112M04	FL-112	Δ 220–275 / Y 380–480	0.31/0.18	0.91	2941	411	70	–
IE3D132M04.IE3D132S04	FL-132/132	Δ_C	0.57	0.99	2360	633	75	6
IE3D132M04.IE3D132S04	FL-132/132	Δ 220–275 / Y 380–480	0.44/0.25	0.92	2980	633	75	–

Technical data for force-ventilated motors of size 160 or larger are available on request.

5.5.7 Brake

STOBER asynchronous motors can optionally be equipped with a spring-loaded brake that engages automatically when switching off the supply voltage and quickly brings the motor shaft to a stop. The spring-loaded brake is designed for dynamic applications with regular braking operations at high speed.

The spring-loaded brake can be released in the de-energized state using an optional manual release lever.

5.5.7.1 Power supply

DC voltage is needed to supply power to the spring-loaded brake. The DC voltage can be provided by an external DC voltage source or by rectifiers installed in the motor terminal box or control cabinet. If you use an external DC voltage source, connect a S14 K35 varistor (or comparable) in parallel to the brake coil to protect your machine from switching surges.

The brake coil is designed for 115 V DC (K38 brake type) or 127 V DC (L48 brake type) by default. Additional designs are optionally available.

Rectifiers installed in the motor terminal box can be supplied with AC voltage directly from the motor terminal board in many applications. During project configuration, ensure that the permitted input voltage U_{1rf} for the rectifier and the nominal voltage for the brake are not exceeded. The following interactions apply depending on the rectifier design:

- Half-wave rectifier: $U_{2rf} = 0.45 \times U_{1rf}$
- Bridge rectifier: $U_{2rf} = 0.9 \times U_{1rf}$
- Powerbox rectifier: 220 V AC ≤ U_{1rf} ≤ 277 V AC

Supplying the rectifier with power from the motor terminal board is not permitted in the following applications:

- Motors operated on a frequency inverter;
- Motors with polarity reversal;
- Motors operated in a star/delta circuit.

5.5.7.2 Connection

The spring-loaded brake engages once its power supply is switched off. In terms of the circuitry, the power supply can be switched off in two ways. The alternating current side of the rectifier always has to be switched. Simultaneously switching the alternating current side of the rectifier significantly reduces the linking time $t_{1,B}$ and trigger delay $t_{11,B}$ until the brake engages. The following diagrams and technical data illustrate this point.

For more information, refer to the connection plan included in the delivery of every motor.

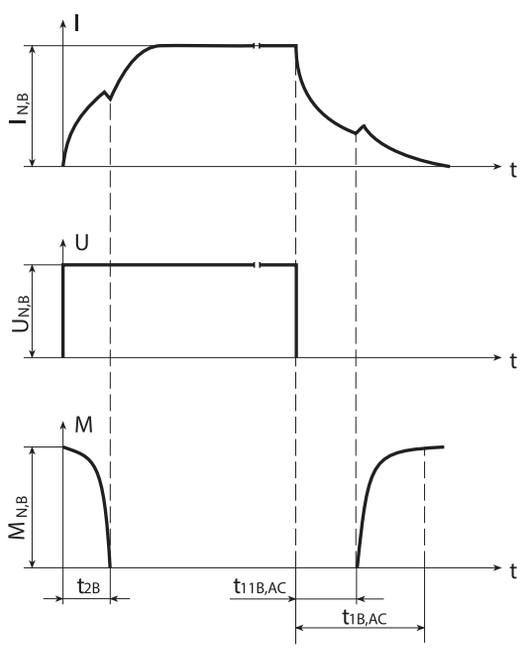

Switching behavior of the brake during AC-side switching

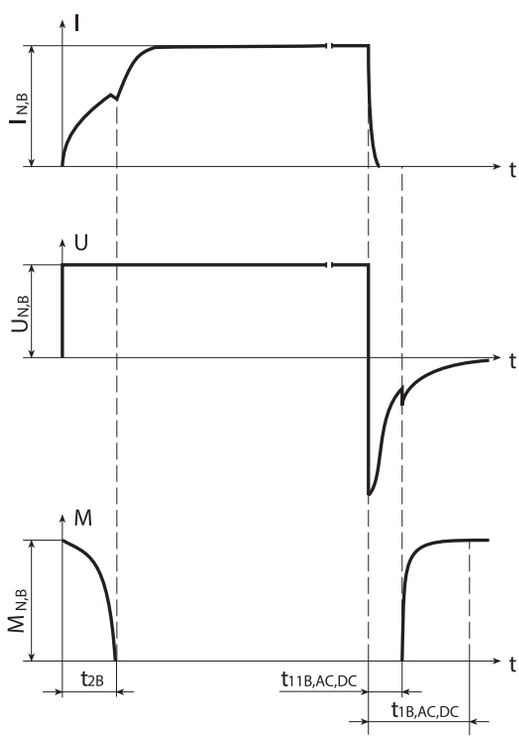

Switching behavior of the brake during DC-side switching

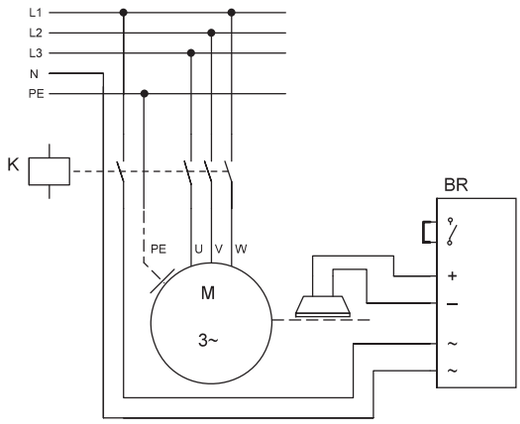

Switching example for AC-side switching

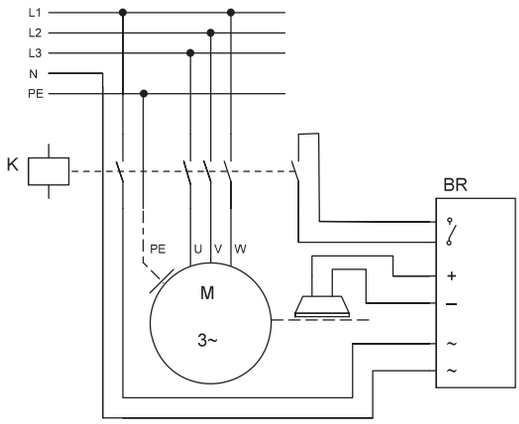

Switching example for AC and DC-side switching

5.5.7.3 Powerbox rectifier

STOBER asynchronous motors with spring-loaded brake are equipped with a device called a Powerbox rectifier as standard. A Powerbox rectifier acts as a bridge rectifier during overexcitation and then as a half-wave rectifier afterwards. This provides the following advantages:

- Faster brake engaging;
- Longer intervals between maintenance because the maximum permitted air gap x_{Bmax} increases;
- Increase in brake life span.

The Powerbox rectifier also offers the advantage that it is possible to supply the rectifier with power from the motor terminal board in many applications for wide-range motors.

Features

Feature	Description
Installation location	D063 – D080, IE3D80 – IE3D132 motors: terminal box or control cabinet IE3D160 to IE3D225 motors: control cabinet
Input voltage	180 – 300 V AC ± 0%, 50/60 Hz (applicable for a wide range of 220 – 275 V AC ± 5%, 50/60 Hz)
Overexcitation time	350 ms ± 10%
Conductor length	Maximum of 100 m (from Powerbox rectifier to brake coil)
Max. permitted output current at 45 °C	1.2 A continuously 2.4 A for 350 ms
Max. permitted output current at 75 °C	0.7 A continuously 1.4 A for 350 ms

The following table describes the technical data for spring-loaded brakes operated using a Powerbox rectifier.

Technical data

Motor	Type	$M_{N,B}$ [Nm]	$U_{N,B}$ [V]	U_{1rf} [V] 50-60 [Hz]	$x_{B,N}$ [mm]	x_{Bmax} [mm]	t_{2B} [ms]	$t_{11B,AC,DC}$ [ms]	$t_{11B,AC}$ [ms]	K_{Bpb}	Z_B [1/h]
D063K_B. D063M_B	K38-02R	2.5	115	220 – 275	0.2	0.8 – 1.02	26 – 21	9 – 11	30 – 33	3.0 – 4.1	3300
D071K_B. D071L_B	K38-02	5.0	115	220 – 275	0.2	0.8 – 1.02	26 – 21	9 – 11	30 – 33	3.0 – 4.1	3300
D080K_B	K38-03	10	115	220 – 275	0.2	1.36 – 1.75	31 – 26	13 – 16	78 – 85	3.9 – 5.2	2400
IE3D090L_B. IE3D090S_B	K38-04	20	115	220 – 275	0.2	1.6 – 2.1	50 – 44	17 – 21	126 – 139	3.5 – 5.3	2400
IE3D100K_B. IE3D100L_B	K38-05	36	115	220 – 275	0.2	2.1 - 2.8	55 – 48	35 – 42	186 – 198	4.8 – 6.5	1500
IE3D112M_B	L48-14	60	127	220 – 275	0.3	2.5 – 3.4	89 – 76	54 – 65	359 – 390	4.6 – 6.2	300
IE3D132K_B. IE3D132L_B. IE3D132M_B. IE3D132S_B	L48-16	80	127	220 – 275	0.3	2.5 – 3.4	107 – 91	75 – 90	497 – 540	4.1 – 5.6	300
IE3D160K_B. IE3D160L_B. IE3D160M_B	L48-18	150	127	220 – 275	0.4	2.5 – 3.4	179 – 152	91 – 110	608 – 660	4.7 – 6.3	300
IE3D180K_B. IE3D180L_B	L48-20	260	127	220 – 275	0.4	2.5 – 3.4	238 – 203	166 – 200	1105 – 1200	3.5 – 5.9	120
IE3D200L_B. IE3D200M_B	L48-25	400	127	220 – 275	0.5	2.5 – 3.4	286 – 244	224 – 270	1492 – 1620	4.3 – 6.0	60

Notes

Note that the performance data for the brake depends on the Powerbox rectifier input voltage U_{1rf}.

An explanation of the formula symbols can be found in the Chapter [▶ 13.1].

5.5.7.4 Half-wave or bridge rectifier

The DC voltage for the spring-loaded brake can also be converted from AC voltage by an optional half-wave rectifier or bridge rectifier.

Half-wave rectifiers are intended for applications lacking an AC voltage ≤ 277 V AC for the rectifier. If lower voltages are available, a bridge rectifier with better DC voltage quality should be used.

The following table describes the technical data for spring-loaded brakes operated using a half-wave or bridge rectifier.

Technical data

Motor	Type	$M_{N,B}$ [Nm]	P_{B20} [W]	$W_{B,Radj}$ [10^6 J]	$W_{B,R01}$ [10^6 J]	$x_{B,N}$ [mm]	x_{Bmax} [mm]	y_{Blim} [mm]	t_{2B} [ms]	$t_{11B,AC,DC}$ [ms]	$t_{11B,AC}$ [ms]	ΔJ_B [10^{-4} kgm²]	Δm_B [kg]
D063K_B. D063M_B	K38-02R	2.5	25	15.0	7.5	0.2	0.4	5.5	40	10	70	0.28	1.1
D071K_B. D071L_B	K38-02	5.0	25	15.0	7.5	0.2	0.4	5.5	40	10	70	0.28	1.1
D080K_B	K38-03	10	30	37.5	12.5	0.2	0.5	6.5	55	15	100	0.79	1.7
IE3D090L_B. IE3D090S_B	K38-04	20	30	76.0	19.0	0.2	0.6	8.0	90	25	180	1.50	3.3
IE3D100K_B. IE3D100L_B	K38-05	36	48	112.0	28.0	0.2	0.6	10.0	110	25	220	3.85	5.0
IE3D112M_B	L48-14	60	50	215.0	43.0	0.3	0.8	6.0	150	65	390	6.93	5.7
IE3D132K_B. IE3D132L_B. IE3D132M_B. IE3D132S_B	L48-16	80	55	434.0	62.0	0.3	1.0	7.5	180	90	540	16.5	8.7
IE3D160K_B. IE3D160L_B. IE3D160M_B	L48-18	150	85	540.0	90.0	0.4	1.0	8.0	300	110	660	31.9	13.2
IE3D180K_B. IE3D180L_B	L48-20	260	100	612.0	76.5	0.4	1.2	9.6	400	200	1200	80.3	21.2
IE3D200L_B. IE3D200M_B	L48-25	400	110	792.0	88.0	0.5	1.4	12.5	500	270	1620	220	32.0

An explanation of the formula symbols can be found in the Chapter [▶ 13.1].

5.5.8 Connection method

5.5.8.1 Position of the connections

In the following figure, there are markings on both sides of the terminal box through which the connecting cables can be routed into the terminal box. Specify one of the two sides when placing your purchase order. If the motor is installed in another mounting position, the position of the terminal box and optional connections changes accordingly.

You can find the position of the motor terminal box in relation to the geared motor in the corresponding chapter of this catalog.

You can find the dimensions of the terminal box in Chapter [▶ 5.3].

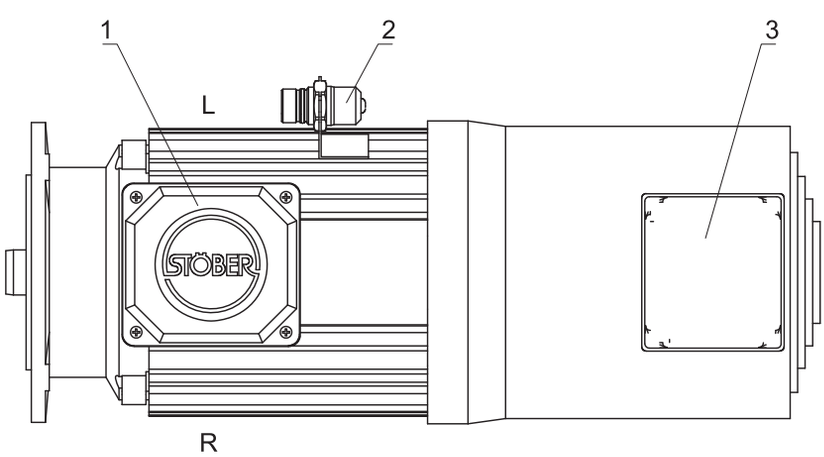

1	Motor terminal box	2	Encoder plug connector (optional)
3	Forced ventilation unit terminal box (optional)	L	Left side of the terminal box
R	Right side of the terminal box		

5.5.8.2 Motor terminal box

The motor power connections and other connections are located in the terminal box.

In the terminal box, there are three metric tapped holes for screw connections. The tapped holes are closed with plugs. The diameter of the tapped holes depends on the size of the motor, as shown in the following table.

Size	1st bore	2nd bore	3rd bore
080	M20	M16	M12
090	M25	M20	M12
100	M25	M20	M12
112	M25	M20	M12
132	M32	M32	M20
160	M40	M40	M20
180	M40	M40	M20
200	M50	M50	M20
225	M50	M50	M20

For the motor connection, use shielded cables and screw connections connected to the cable shielding in order to avoid EMC problems.

Power connection

The terminal box contains a terminal board with connections labeled in accordance with EN 60034-8. Terminal links are provided for a wye or delta connection. The terminal box contains 3 metric threaded holes for connection cable screw connections. The screw connections are not included in the scope of delivery.

The connection schema for the different connection types is shown in the following table.

Connection type	Connection schema
Delta connection	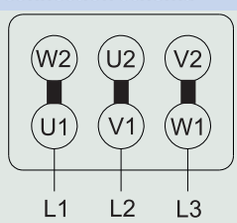
Star connection	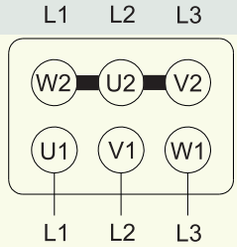
Star/Delta connection	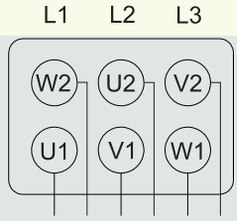

Grounding conductor connection

For connecting the grounding conductor, the terminal box contains a grounding screw that is marked with the ⏚ symbol in accordance with IEC 60417-DB. The cross-section of the grounding conductor has to be at least as large as the cross-section of the lines in the power connection.

PTC thermistor connection

The terminal box contains connection terminals for the PTC thermistor for implementing thermal winding protection (optional).

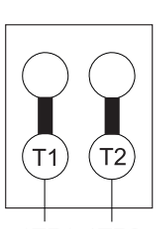

Spring-loaded brake connection

The terminal box also contains connection terminals for the spring-loaded brake (optional).

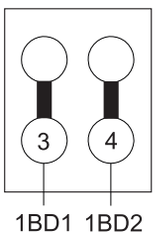

5.5.8.3 Encoder connection

A plug connector with a quick lock is installed on the motor housing for the optional encoder connection. You can find the dimensions and position of the plug connector in Chapter [▶ 5.3]. You can find appropriate cables for the connection to the drive controller in Chapter [▶ 11].

In the following connection assignment, the colors of the motor-internal connecting wires are specified in accordance with IEC 60757.

SSI digital encoder, plug connector size con.23

Connection diagram	Pin	Connection	Color
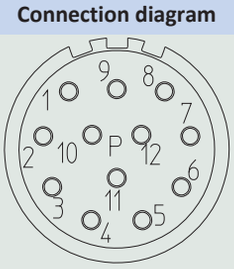	1	Clock +	VT
	2	Up sense	WH GN
	3		
	4		
	5	Data –	PK
	6	Data +	GY
	7		
	8	Clock –	YE
	9		
	10	0 V GND	WH GN
	11		
	12	Up +	BN GN
	Pin 2 is connected to pin 12 in the plug connector		

HTL/TTL incremental encoder, plug connector size con.23

Color 1 of the motor-internal connecting wires applies up to motor size 80, color 2 applies starting with motor size 90.

Connection diagram	Pin	Connection	Color 1	Color 2
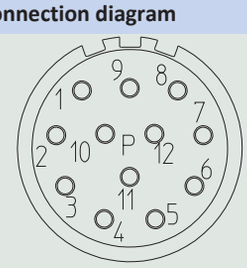	1	B –	PK	BK
	2	Up sense	–	YE
	3	N +	BU	PK
	4	N –	RD	WH
	5	A +	GN	GN
	6	A –	YE	BN
	7			
	8	B +	GY	GY
	9			
	10	0 V GND	WH	BU
	11	0 V GND	–	VT
	12	Up +	BN	RD

5.5.8.4 Forced ventilation unit terminal box

The power connections for the optional forced ventilation unit are located in a separate terminal box.

The terminal box contains a terminal board with connections labeled in accordance with EN 60034-8. Terminal links are provided for a wye or delta connection. The terminal box contains 3 metric threaded holes for connection cable screw connections. The screw connections are not included in the scope of delivery.

The connection types for the forced ventilation unit power supply are described in the following table.

Connection type	Connection schema
Delta connection	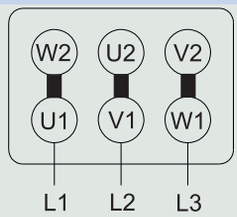
Star connection	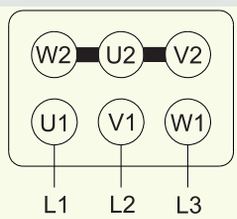
Steinmetz connection with operating capacitor C	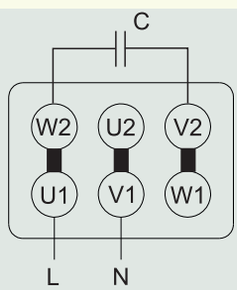

The operating capacitor C for the Steinmetz connection is not included in the forced ventilation unit scope of delivery.

For connecting the grounding conductor, the terminal box contains a grounding screw that is marked with the ⏚ symbol in accordance with IEC 60417-DB. The cross-section of the grounding conductor has to be at least as large as the cross-section of the lines in the power connection.

5.6 Project configuration

5.6.1 Legal requirements

In many countries or economic regions, putting asynchronous motors on the market requires complying with certain laws. Below you can find information on a few legal requirements to be observed in conjunction with projecting STOBER asynchronous motors.

European Union

Asynchronous motors fall under the scope of the (Low Voltage) Directive 2014/35/EU and must bear the CE mark.

In addition, asynchronous motors (without brake) are subject to the (Ecodesign) Directive 2009/125/EC along with the resulting Regulation (EC) No. 640/2009, Regulation (EU) No. 4/2014 and 2016/2282 from the European Commission. Accordingly, asynchronous motors brought onto the market on or after 2017-01-01 that have a nominal output voltage of 0.75 to 375 kW must meet at least efficiency class IE3. As an alternative to operating IE3 motors, the law allows the operation of IE2 motors on a drive controller. IE2 motors must be marked with "VSD use only" on the nameplate and must not be operated directly on the grid network.

USA

Asynchronous motors brought onto the market in the United States are subject to the Energy Independence and Security Act of 2007 (EISA) under US law and must be registered with the US Department of Energy (DoE). This includes labeling the asynchronous motor's nameplate with the "ee" logo and the CC registration number.

Certificates and standards

The following certificates and standards are not required by law but are common in some countries:

- Registration with Underwriters Laboratory (UL). This includes labeling the asynchronous motor's nameplate with the CURus logo and registration number.

- Electrical design of the asynchronous motor in accordance with the NEMA-MG 1 standard in the United States.

Available combinations

STOBER Asynchronous motors are available in the following combinations in relation to the properties listed above:

Conformity/Certificate	Nominal frequency
CE	50 Hz
CE, cURus, NEMA	50/60 Hz
EISA, cURus (size 112 and higher)	60 Hz

5.6.2 Operation on a drive controller

Drive controllers can adjust the speed of asynchronous motors to any value with minimal losses. In this chapter, you can find information on operating asynchronous motors above and below the nominal frequency.

Operation below the nominal frequency

Operating asynchronous motors with self-ventilation below approximately 60% of the nominal frequency requires limiting the motor current as well as the torque as a result. Otherwise the motor may overheat. This type of limiting is not necessary on motors with forced ventilation.

5.6.2.1 Operation above the nominal frequency

The motor can also be operated above its nominal frequency. Two basic operating modes for doing so are explained below:

- Operation in a field weakening range
- Operation per the 87 Hz characteristic

Operation in a field weakening range

If the motor is operated above its nominal frequency at a constant nominal voltage, operation is considered in the field weakening range. For this operating mode, the drive controller is configured to a maximum frequency that is larger than the nominal frequency (e.g. 80 Hz/400 V). Speed increases as the drive controller frequency increases; torque, in contrast, decreases proportionally because the flux in the motor drops.

You can operate the motor in the field weakening range using both a delta and a star connection.

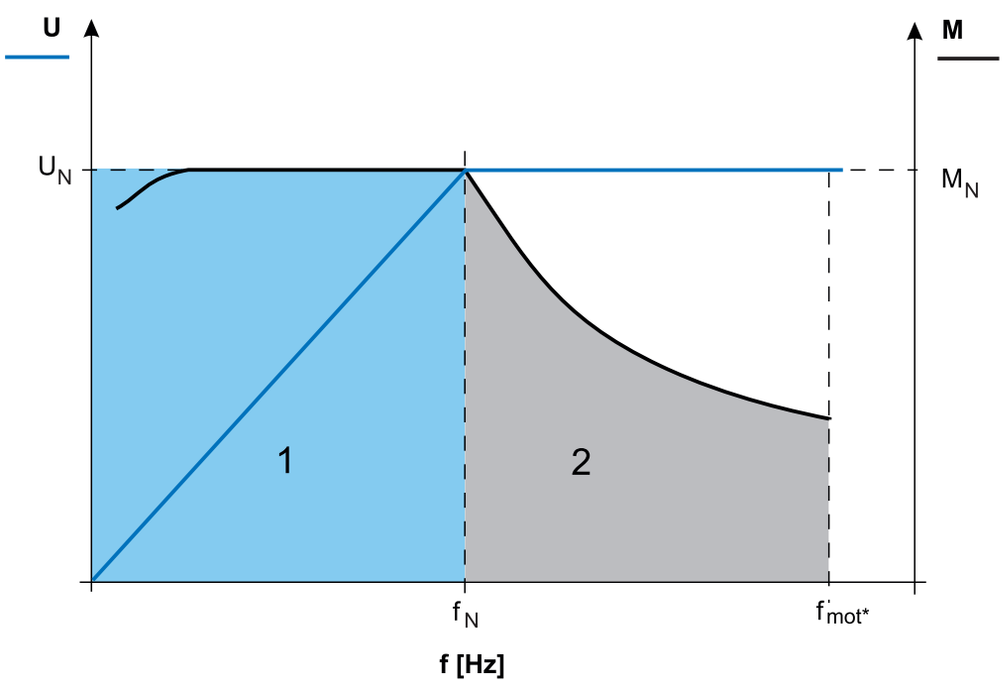

1 Constant torque range 2 Field weakening range

Operation per the 87 Hz characteristic

In this operating mode, the speed of the motor also increases proportionally to the motor voltage to a value above its nominal frequency. In this process, the torque remains almost constant. To this end, a 50 Hz, 230/400 V motor is connected with a delta setup (50 Hz, 230 V), but the drive controller is configured to 87 Hz, 400 V. This can increase the speed by √3x times the nominal frequency (87 Hz) with virtually constant torque. In doing so, the motor voltage is also increased continuously so that the motor operates with constant flux instead of field weakening.

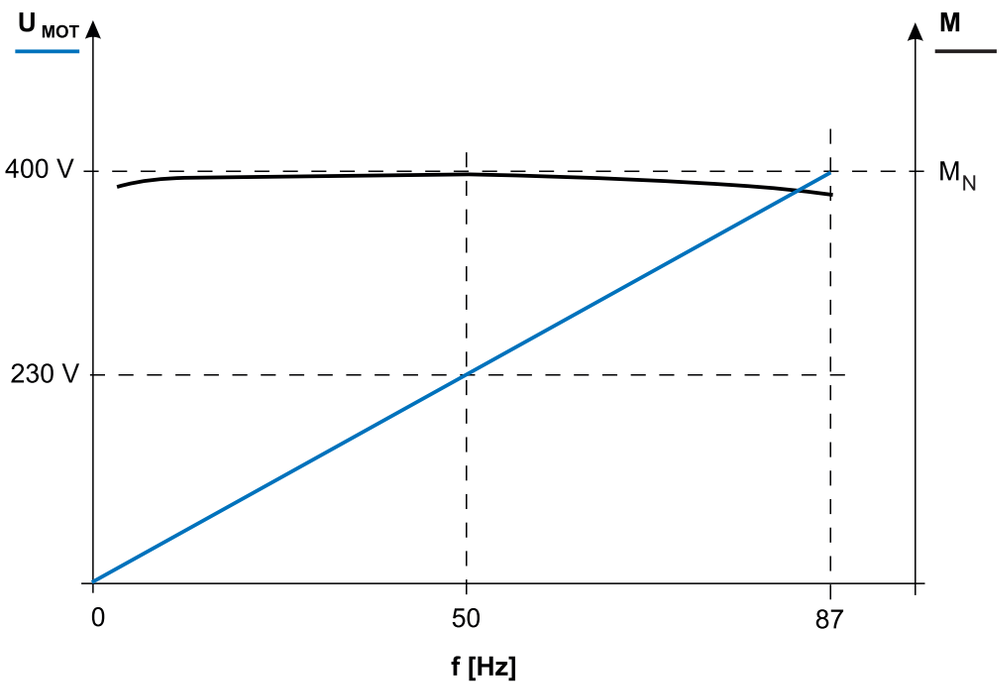

Keep the following information in mind in this context:

- The motor must be designed for operation per the 87 Hz characteristic. Keep this in mind when placing a purchase order.
- Take the higher (√3-times) current requirement of the motor when selecting the drive controller.
- You can find the connection schema for the delta connection in the chapter [▶ 5.5.8.2].

5.7 Further information

5.7.1 Directives and standards

STOBER asynchronous motors correspond to the following directives and standards:

- (Low Voltage) Directive 2014/35/EU
- (Ecodesign) Directive 2009/125/EC (if applicable)
- EN 60034-1:2010 + Cor.:2010
- EN 60204-1:2018
- EN 60038:2011

5.7.2 Marks and test symbols

STOBER asynchronous motors can be provided with the following marks and test symbols:

CE mark: The product meets the requirements of EU directives (standard).

cURus test symbol "Systems, Electrical Insulation - Component", registered with Underwriters Laboratories USA (optional).

CC301B

ee logo: The asynchronous motor conforms to the Energy Independence and Security Act of 2007 (EISA) under US law and is registered with the US Department of Energy (DoE) under registration number CC301B (optional).

5.7.3 Additional documentation

Additional documentation related to the product can be found at http://www.stoeber.de/en/downloads/

Enter the ID of the documentation in the Search... field.

Documentation	ID
Operating manual for asynchronous motors	442577_en
Operating manual for asynchronous motor encoder	442025_en
Operating manual for brake for asynchronous motors	442015_de

6 SC6 Drive controllers

Table of contents

6.1 Overview ... 216

6.1.1 Features ... 217

6.1.2 Software components ... 218

6.1.3 Application training ... 218

6.2 Technical data ... 219

6.2.1 Type designation ... 219

6.2.2 Sizes ... 219

6.2.3 General technical data ... 220

6.2.4 Electrical data ... 220

6.2.5 Derating ... 226

6.2.6 Dimensions ... 227

6.2.7 Weight ... 227

6.2.8 Minimum clearances ... 228

6.3 Drive controller/motor combinations ... 229

6.4 Accessories ... 230

6.4.1 Safety technology ... 230

6.4.2 Communication ... 230

6.4.3 Terminal set ... 231

6.4.4 DC link connection ... 231

6.4.5 Braking resistor ... 232

6.4.6 HTL-to-TTL adapter ... 236

6.5 Further information ... 236

6.5.1 Directives and standards ... 236

6.5.2 Symbols, marks and test symbols ... 236

6.5.3 Additional documentation ... 236

6 Drive controllers

SC6

6.1 Overview

Our more compact version for the encoderless Lean motor

Features

- Single or double-axis controller with a nominal output current up to 19 A and 250% overload capacity
- Sensorless position control by STOBER Lean motors
- Control of rotary synchronous servo motors, asynchronous motors and torque motors
- HIPERFACE DSL One Cable Solution
- Electronic motor nameplate via HIPERFACE DSL or EnDat 2.2 digital encoder interface
- Integrated EtherCAT or PROFINET communication
- STO safety technology using terminals or STO and SS1 using FSoE (Safety over EtherCAT): SIL 3, PL e (cat. 4)
- Integrated brake control
- Single-ended nominal power consumption on double-axis controllers for operation of motors with different power
- Energy supply through direct power supply
- Flexible DC link connection for multi-axis applications

6.1.1 Features

The compact stand-alone SC6 drive controller allows for sensorless control of STOBER Lean motors of series LM. These motors provide energy efficiency at the performance level of synchronous servo motors. They also guarantee high investment protection, thanks to energy efficiency class IE5 and the corresponding higher efficiency compared to IE4 asynchronous motors. However, the SC6 can also be used in combination with asynchronous motors or synchronous servo motors with encoders (e.g. the STOBER EZ series). SC6 is available in three sizes with a nominal output current of up to 19 A: sizes 0 and 1 as a double-axis controller, size 2 as a single-axis controller.

The optimized vector control, sensorless vector control, U/f slip-compensated and U/f controller control types are available for use with asynchronous motors.

The compact SC6 for Lean motors of the LM series

As small as a paperback

You save valuable space in your control cabinet because, with a width of just 45 mm, this drive controller is the most compact solution on the market. It offers all the features that a designer requires.

Quick DC-Link

The drive controllers have the option of a DC link connection. This technology makes it possible for the regenerative production of energy from one drive to be used as motor energy by another drive. The Quick DC-Link rear structure element has been developed to set up a reliable and efficient rail connection to the DC link connection. This optionally available accessory connects the DC links of the individual drive controllers by means of copper rails that can carry a load of up to 200 A. The rails can be attached without any tools using quick fastening clamps.

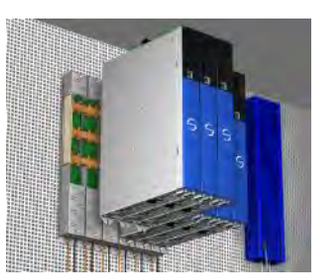

Perfectly adapted combinations

SC6 drive controllers can be combined with the STOBER SI6 and SD6 series as needed. For the general energy supply, the drive controllers from the SC6, SI6 and SD6 series are connected to each other using Quick DC-Link modules.

Tailored energy usage

When using double-axis modules, the unused power reserves of one axis can be used for other axes.

Fewer clicks, less wiring

The installation of the drive controller is as easy as you could imagine. There is no difficult wiring. Even if you are connecting the drive controllers in a DC link, the patented Quick DC-Link modules allow for a simple "click" into the standard copper rails as well as the simple installation and connection of the drive controllers.

Safety functions

The safety concept of the drive controller is based on the STO (Safe Torque Off) function. The concept corresponds to SIL 3 according to DIN EN 61800-5-2 and PL e (Cat. 4) according to DIN EN ISO 13849-1. For double-axis controllers, the STO safety function has a two-channel structure that acts upon both axes. For connection to a higher-level safety circuit, different interfaces are available (terminals or FSoE).

Heavy duty

There is an extremely robust design concealed behind the elegant exterior. All components—from the stable, well-shielded sheet steel housing to the motor connectors—far exceed the set values of industry standards. The inside is also anything but small-scale: ample computer capacities, high-quality components, careful workmanship.

6.1.2 Software components

Project configuration and commissioning

The 6th generation of DriveControlSuite project configuration and commissioning software has all the functions for the efficient use of drive controllers in single-axis and multi-axis applications. The program guides you step by step through the complete project configuration and parameterization process using wizards.

Open communication

The Ethernet-based EtherCAT and PROFINET fieldbus systems are available in the drive controller.

Applications

Drive-based motion control is recommended for the decentralized motion control of sophisticated machines.

The drive-based application package from STOBER is the right choice wherever universal and flexible solutions are needed. The Drive Based application provides drive-based motion control for positioning, velocity and torque/force with the PLCopen Motion Control command set. These standard commands have been combined into operating modes for different applications and supplemented with additional functions such as motion block linking, cams and much more. For the command operating mode, all properties of the movements are specified directly by the controller. The properties of the movements in the drive are predefined in the motion block operating mode so that only a start signal is necessary to perform the movement. Linking can be used to define complete motion sequences. There is a separate operating mode available for applications controlled by velocity or torque/force such as pumps, fans or conveyor belts. This also allows for operation without a controller.

In addition, the CiA 402 application is also available, which includes both the controller-based and drive-based operating modes (csp, csv, cst, ip, pp, pv, pt).

6.1.3 Application training

STOBER offers a multi-level training program that focuses essentially on application programming of the motion controller and drive controller.

G6 Basic

Training content: System overview, installation and commissioning of the drive controller. Use of option modules. Parameterization, commissioning and diagnostics using the commissioning software. Remote maintenance. Basics of controller optimization. Configuration of the drive train. Integrated software functions. Software applications. Connection to a higher-level controller. Basics of safety technology. Practical exercises on training topics.

Software used: DriveControlSuite.

G6 Advanced

Training content: Special knowledge for regulating, control and safety technology. Practical exercises on training topics.

6.2 Technical data

Technical data for the drive controller can be found in the following chapters.

6.2.1 Type designation

SC	6	A	0	6	2	Z

Tab. 1: Example code for type designation

Code	Designation	Design
SC	Series	ServoCompact
6	Generation	Generation 6
A	Version	
0 – 2	Size	
6	Power output stage	Power output stage within the size
2	Axis controller	Double-axis controller
1		Single-axis controller
Z	Safety technology	SZ6: Without safety technology
R		SR6: STO using terminals
Y		SY6: STO and SS1 using FSoE

Tab. 2: Meaning of the example code

6.2.2 Sizes

Type	ID No.	Size
SC6A062	56690	Size 0
SC6A162	56691	Size 1
SC6A261	56692	Size 2

Tab. 3: Available SC6 types and sizes

SC6 in sizes 0 to 2

Note that the basic device is delivered without terminals. Suitable terminal sets are available separately for each size.

6.2.3 General technical data

The following information applies to all device types.

Device features	
Protection class of the device	IP20
Protection class of the installation space	At least IP54
Radio interference suppression	Integrated line filter in accordance with EN 61800-3:2012, interference emission class C3
Overvoltage category	III in accordance with EN 61800-5-1:2008
Test symbols	CE cULus (cULus in preparation)

Tab. 4: Device features

Transport and storage conditions	
Storage/ transport temperature	−20 °C to +70 °C Maximum change: 20 K/h
Relative humidity	Maximum relative humidity 85%, non-condensing
Vibration (transport) in accordance with DIN EN 60068-2-6	5 Hz ≤ f ≤ 9 Hz: 3.5 mm 9 Hz ≤ f ≤ 200 Hz: 10 m/s² 200 Hz ≤ f ≤ 500 Hz: 15 m/s²
Fall height for freefall[1] Weight < 100 kg in accordance with DIN EN 61800-2 (or DIN EN 60721-3-2:1997, class 2M1)	0.25 m

Tab. 5: Transport and storage conditions

Operating conditions	
Surrounding temperature during operation	0 °C to 45 °C with nominal data 45 °C to 55 °C with derating −2.5% / K
Relative humidity	Maximum relative humidity 85%, non-condensing
Installation altitude	0 m to 1000 m above sea level without restrictions 1000 m to 2000 m above sea level with −1.5%/100 m derating
Pollution degree	Pollution degree 2 in accordance with EN 50178
Ventilation	Installed fan
Vibration (operation) in accordance with DIN EN 60068-2-6	5 Hz ≤ f ≤ 9 Hz: 0.35 mm 9 Hz ≤ f ≤ 200 Hz: 1 m/s²

Tab. 6: Operating conditions

Discharge times	
Self-discharge of DC link	15 min

Tab. 7: Discharge times of the DC link circuit

6.2.4 Electrical data

The electrical data of the available SC6 sizes as well as the properties of the brake chopper can be found in the following sections.

Information

For the time span between two energizing processes, note that:

a) Direct, repeat activation of the supply voltage is possible for power-on/power-off operation.

b) A time span of > 15 must be observed between two energizing processes during continuous, cyclical power-on/power-off operation with increased charging capacity.

[1] Only valid for components in original packaging

Information

The STO safety function is available for safe stopping as an alternative to continuous, cyclical power-on/power-off operation.

An explanation of the formula symbols used can be found in the chapter [▶ 13.1].

6.2.4.1 Control unit

Electrical data	All types
U_{1CU}	24 V_{DC}, +20%/−15%
I_{1maxCU}	0.5 A

Tab. 8: Control unit electrical data

6.2.4.2 Power unit: Size 0

Electrical data	SC6A062
U_{1PU}	3 × 400 V_{AC}, +32% / −50%, 50/60 Hz; 3 × 480 V_{AC}, +10% / −58%, 50/60 Hz
f_{2PU}	0 – 700 Hz
U_{2PU}	0 – max. U_{1PU}
C_{PU}	270 µF
C_{maxPU}	1400 µF

Tab. 9: SC6 electrical data, size 0

The maximum charging capacity depends on the time between energizing two devices:

Information

If a time span of ≥ 15 min is maintained between energizing two devices, the maximum charging capacity C_{maxPU} increases to 1880 µF.

Nominal currents up to +45 °C (in the control cabinet)

Electrical data	SC6A062
$f_{PWM,PU}$	4 kHz
$I_{1N,PU}$	10 A
$I_{2N,PU}$	2 × 4.5 A
I_{2maxPU}	210% for 2 s

Tab. 10: SC6 electrical data, size 0, for 4 kHz clock frequency

Electrical data	SC6A062
$f_{PWM,PU}$	8 kHz
$I_{1N,PU}$	8.9 A
$I_{2N,PU}$	2 × 4 A
I_{2maxPU}	250% for 2 s

Tab. 11: SC6 electrical data, size 0, for 8 kHz clock frequency

Electrical data	SC6A062
U_{onCH}	780 – 800 V_{DC}
U_{offCH}	740 – 760 V_{DC}
R_{2minRB}	100 Ω
P_{maxRB}	6.4 kW
P_{effRB}	2.9 kW

Tab. 12: Brake chopper electrical data, size 0

6.2.4.3 Power unit: Size 1

Electrical data	SC6A162
U_{1PU}	3 × 400 V_{AC}, +32% / −50%, 50/60 Hz; 3 × 480 V_{AC}, +10% / −58%, 50/60 Hz
f_{2PU}	0 – 700 Hz
U_{2PU}	0 – max. U_{1PU}
C_{PU}	940 µF
C_{maxPU}	1400 µF

Tab. 13: SC6 electrical data, size 1

Information

If a time span of ≥ 15 min is maintained between energizing two devices, the maximum charging capacity C_{maxPU} increases to 1880 µF.

Nominal currents up to +45 °C (in the control cabinet)

Electrical data	SC6A162
$f_{PWM,PU}$	4 kHz
$I_{1N,PU}$	23.2 A
$I_{2N,PU}$	2 × 10 A
I_{2maxPU}	210% for 2 s

Tab. 14: SC6 electrical data, size 1, for 4 kHz clock frequency

Electrical data	SC6A162
$f_{PWM,PU}$	8 kHz
$I_{1N,PU}$	20.9 A
$I_{2N,PU}$	2 × 9 A
I_{2maxPU}	250% for 2 s

Tab. 15: SC6 electrical data, size 1, for 8 kHz clock frequency

Electrical data	SC6A162
U_{onCH}	780 – 800 V_{DC}
U_{offCH}	740 – 760 V_{DC}
R_{2minRB}	47 Ω
P_{maxRB}	13.6 kW
P_{effRB}	6.2 kW

Tab. 16: Brake chopper electrical data, size 1

6.2.4.4 Power unit: Size 2

Electrical data	SC6A261
U_{1PU}	3 × 400 V_{AC}, +32% / −50%, 50/60 Hz; 3 × 480 V_{AC}, +10% / −58%, 50/60 Hz
f_{2PU}	0 – 700 Hz
U_{2PU}	0 – max. U_{1PU}
C_{PU}	940 µF
C_{maxPU}	1400 µF

Tab. 17: SC6 electrical data, size 2

Information

If a time span of ≥ 15 min is maintained between energizing two devices, the maximum charging capacity C_{maxPU} increases to 1880 µF.

Nominal currents up to +45 °C (in the control cabinet)

Electrical data	SC6A261
$f_{PWM,PU}$	4 kHz
$I_{1N,PU}$	22.6 A
$I_{2N,PU}$	19 A
I_{2maxPU}	210% for 2 s

Tab. 18: SC6 electrical data, size 2, for 4 kHz clock frequency

Electrical data	SC6A261
$f_{PWM,PU}$	8 kHz
$I_{1N,PU}$	17.9 A
$I_{2N,PU}$	15 A
I_{2maxPU}	250% for 2 s

Tab. 19: SC6 electrical data, size 2, for 8 kHz clock frequency

Electrical data	SC6A261
U_{onCH}	780 – 800 V_{DC}
U_{offCH}	740 – 760 V_{DC}
R_{2minRB}	47 Ω
P_{maxRB}	13.6 kW
P_{effRB}	6.2 kW

Tab. 20: Brake chopper electrical data, size 2

6.2.4.5 Parallel connection

The charging capacity of the drive controllers can be increased by a parallel connection only if the power grid supply is connected to all drive controllers simultaneously.

6.2.4.6 Single-ended nominal power consumption on double-axis controllers

Operating two motors on one double-axis controller makes it possible to operate one of the motors with a continuous current above the nominal current of drive controller if the continuous current of the second connected motor is lower than the nominal current of drive controller. This enables economical combinations of double-axis controllers and motors.

The nominal output current for axis B can be determined using the following formula if the output current for axis A is known:

Example 1

$$I_{2PU(B)} = I_{2N,PU} - \left(I_{2PU(A)} - I_{2N,PU} \right) \times \frac{3}{5}$$ where $0 \le I_{2PU(A)} \le I_{2N,PU}$

Example 2

$$I_{2PU(B)} = I_{2N,PU} - \left(I_{2PU(A)} - I_{2N,PU} \right) \times \frac{5}{3}$$ where $I_{2N,PU} \le I_{2PU(A)} \le 1{,}6 \times I_{2N,PU}$

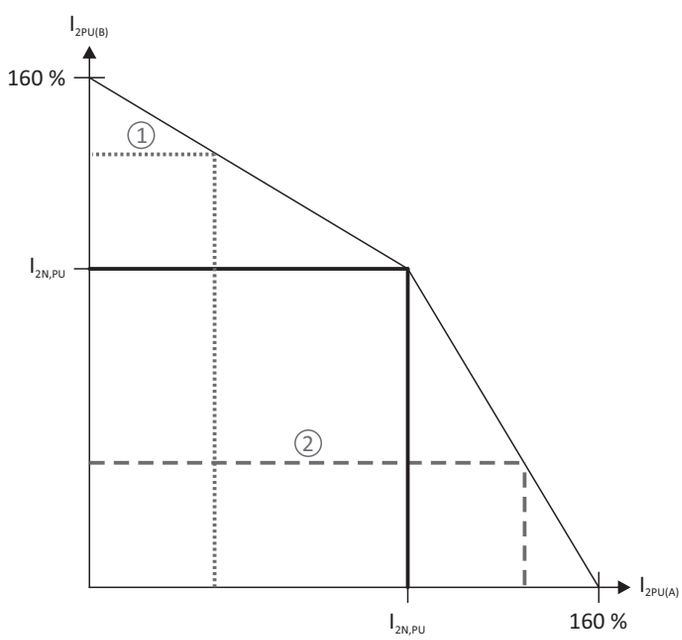

Fig. 1: Asymmetric load on double-axis controllers

Information

Note that the available maximum currents I_{2maxPU} of the axis controllers are also relative to the nominal output current $I_{2N,PU}$ for single-ended nominal power consumption.

6.2.4.7 Power loss data in accordance with EN 61800-9-2

Type	Nominal current $I_{2N,PU}$	Apparent power	Absolute losses $P_{V,CU}$[2]	Operating points[3]								IE class[4]	Comparison[5]
				(0/25)	(0/50)	(0/100)	(50/25)	(50/50)	(50/100)	(90/50)	(90/100)		
				Relative losses									
	[A]	[kVA]	[W]	[%]									
SC6A062	4.5	6.2	Max. 10	1.34	1.49	1.86	1.40	1.63	2.19	1.84	2.77	IE2	
SC6A162	10	13.9	Max. 10	0.76	0.92	1.43	0.81	1.04	1.75	1.22	2.29	IE2	
SC6A261	19	13.2	10	0.77	0.95	1.56	0.82	1.08	1.89	1.25	2.43	IE2	
				Absolute losses P_V									
	[A]	[kVA]	[W]	[W]									[%]
SC6A062	4.5	6.2	Max. 10	83.2	92.5	115.2	86.7	100.8	135.8	113.9	171.7	IE2	36.0
SC6A162	10	13.9	Max. 10	105.5	128.3	198.8	113.1	145.1	243.5	170.1	318.7	IE2	40.8
SC6A261	19	13.2	Max. 10	101.2	125.8	206.1	108.5	142.0	249.5	165.6	320.4	IE2	41.0

Tab. 21: Power loss data of SC6 drive controllers in accordance with EN 61800-9-2

General conditions

The specified losses apply to a drive controller. They apply to both axes together in the case of double-axis controllers.

The loss data applies to drive controllers without accessories.

The power loss calculation is based on a three-phase supply voltage with 400 V_{AC}/50 Hz.

The calculated data includes a supplement of 10% in accordance with EN 61800-9-2.

The power loss specifications refer to a clock frequency of 4 kHz.

The absolute losses for a power unit that is switched off refer to the 24 V_{DC} power supply of the control electronics.

[2] Absolute losses for a power unit that is switched off

[3] Operating points for relative motor stator frequency in % and relative torque current in %

[4] IE class in accordance with EN 61800-9-2

[5] Comparison of the losses for the reference related to IE2 in the nominal point (90, 100)

6.2.5 Derating

When dimensioning the drive controller, observe the derating of the nominal output current as a function of the clock frequency, surrounding temperature and installation altitude. There is no restriction for a surrounding temperature from 0 °C to 45 °C and an installation altitude of 0 m to 1000 m. The details given below apply to values outside these ranges.

6.2.5.1 Effect of the clock frequency

Changing the clock frequency f_{PWM} affects the amount of noise produced by the drive, among other things. However, increasing the clock frequency results in increased losses. During project configuration, define the highest clock frequency and use it to determine the nominal output current $I_{2N,PU}$ for dimensioning the drive controller.

Type	$I_{2N,PU}$ 4 kHz [A]	$I_{2N,PU}$ 8 kHz [A]	$I_{2N,PU}$ 16 kHz [A]
SC6A062	2 × 4.5	2 × 4	2 × 3
SC6A162	2 × 10	2 × 9	2 × 5
SC6A261	19	15	8

Tab. 22: Nominal output current $I_{2N,PU}$ dependent on the clock frequency

6.2.5.2 Effect of the surrounding temperature

Derating as a function of the surrounding temperature is determined as follows:

- 0 °C to 45 °C: No restrictions (D_T = 100%)
- 45 °C to 55 °C: Derating −2.5%/K

Example

The drive controller needs to be operated at 50 °C.

The derating factor D_T is calculated as follows

D_T= 100% − 5 × 2.5% = 87.5%

6.2.5.3 Effect of the installation altitude

Derating as a function of the installation altitude is determined as follows:

- 0 m to 1000 m: No restriction (D_{IA} = 100%)
- 1000 m to 2000 m: Derating −1.5%/100 m

Example

The drive controller needs to be installed at an altitude of 1500 m above sea level.

The derating factor D_{IA} is calculated as follows:

D_{IA} = 100% − 5 × 1.5% = 92.5%

6.2.5.4 Calculating the derating

Follow these steps for the calculation:

1. Determine the highest clock frequency (f_{PWM}) that will be used during operation and use it to determine the nominal current $I_{2N,PU}$.
2. Determine the derating factors for installation altitude and surrounding temperature.
3. Calculate the reduced nominal current $I_{2N,PU(red)}$ in accordance with the following formula:
   $I_{2N,PU(red)} = I_{2N,PU} \times D_T \times D_{IA}$

Example

A drive controller of type SC6A062 needs to be operated at a clock frequency of 8 kHz at an altitude of 1500 m above sea level and a surrounding temperature of 50 °C.

The nominal current of the SC6A062 at 8 kHz is 4 A per axis. The derating factor D_T is calculated as follows:

D_T = 100% − 5 × 2.5% = 87.5%

The derating factor D_{IA} is calculated as follows:

D_{IA} = 100% − 5 × 1.5% = 92.5%

The output current of importance for the project configuration is:

$I_{2N,PU(red)}$ = 4 A × 0.875 × 0.925 = 3.24 A

6.2.6 Dimensions

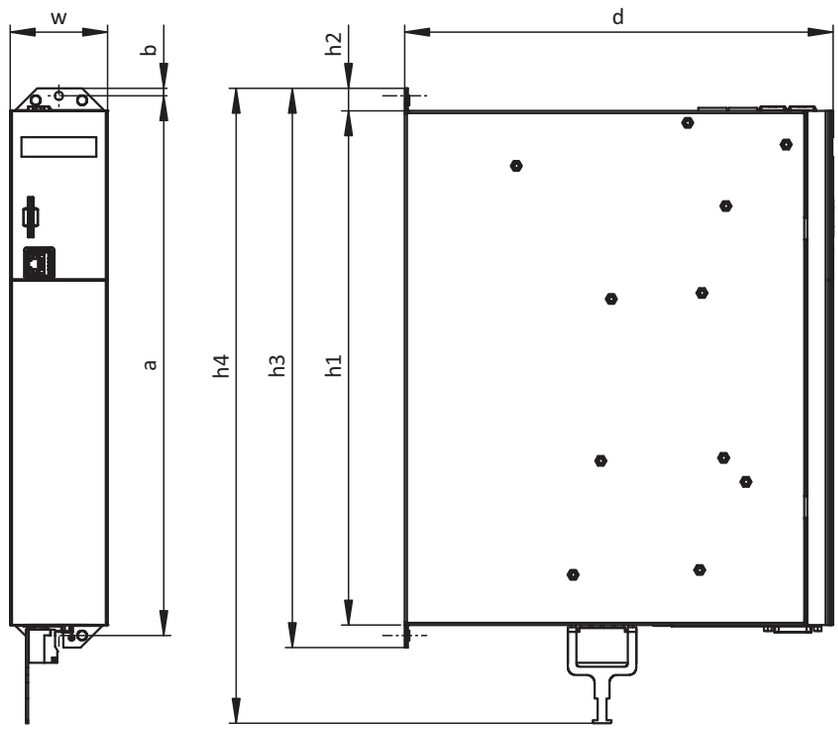

Fig. 2: SC6 dimensional drawing

Dimension			Size 0	Size 1	Size 2
Drive controllers	Width	w	45	65	
	Depth	d	265	286	
	Body height	h1	343		
	Fastening clip height	h2	15		
	Height incl. fastening clips	h3	373		
	Total height incl. shield connection	h4	423		
Fastening holes (M5)	Vertical distance	a	360+2		
	Vertical distance to the upper edge	b	5		

Tab. 23: SC6 dimensions [mm]

6.2.7 Weight

Type	Weight without packaging [g]	Weight with packaging [g]
SC6A062	3600	5200
SC6A162	5300	6700
SC6A261	5200	6400

Tab. 24: SC6 weight [g]

6.2.8 Minimum clearances

Drive controllers

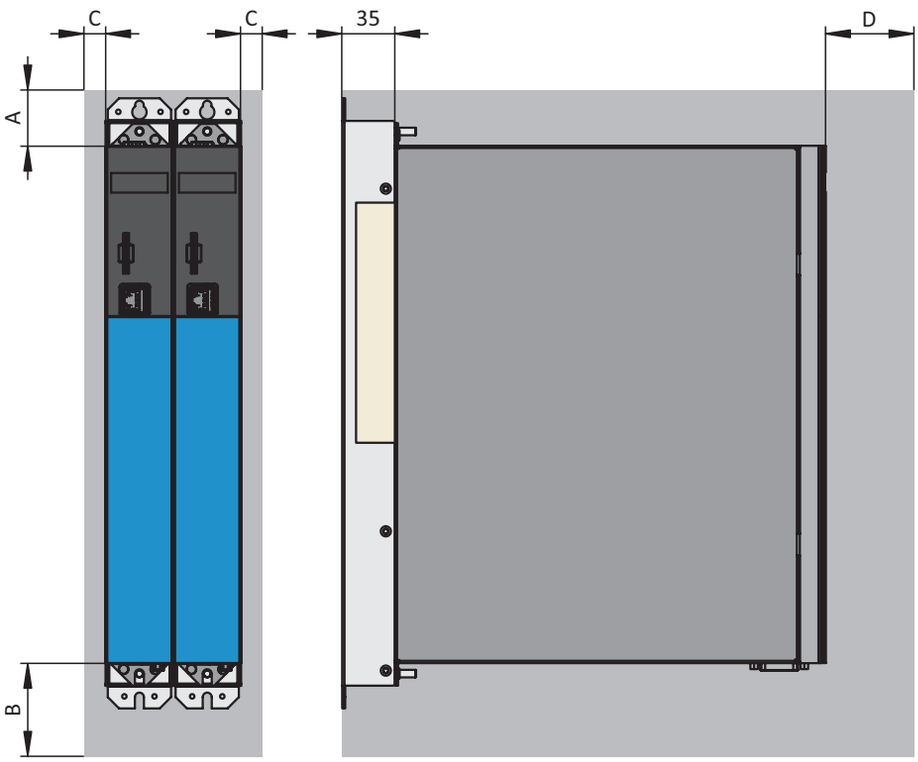

Fig. 3: Minimum clearances

The specified dimensions refer to the outside edges of the drive controller.

Minimum clearance	A (above)	B (below)	C (on the side)	D (in front)
All sizes	100	200	5	50[6]

Tab. 25: Minimum clearances [mm]

Braking resistors

Avoid installation below drive controllers or supply modules. In order for heated air to flow out unimpeded, a minimum clearance of approximately 200 mm must be maintained in relation to neighboring components or walls and approximately 300 mm must be maintained to components above or ceilings.

[6] Minimum clearance to be taken into account for permanent connection of the X9 service interface

6.3 Drive controller/motor combinations

Parameterization of a STOBER drive controller is exceptionally easy, especially together with four-pole STOBER asynchronous motors. The motor is fully typified by inputting just the motor size (e.g. 90L) and its wiring (star or delta). A delta connection (measurement point 230 V, 50 Hz) is available for motors up to 3 kW (size 100). By increasing the voltage at higher frequencies, the full torque can be drawn through the motor up to 87 Hz. It usually makes sense to take this expanded speed adjustment range into account when selecting the gear unit. You can find more detailed information in the chapter [▶ 5.6].

An explanation of the formula symbols used can be found in the chapter [▶ 13.1].

									SC6A062	SC6A162	SC6A261
										$I_{2N,PU}$ [A] ($f_{PWM,PU}$ = 4 kHz)	
	f_T [Hz]	pz	Con-nec-tion	P_N [kW]	n_N [rpm]	M_N [Nm]	M_k/M_N	I_N [A]	4.5	10	19
Δ 230 V / Y 400 V motor winding									**$I_{2N,PU}$ / I_N**		
IE3D080L04	50	4	Y	0.75	1445	5.0	3.7	1.7	2.6		
IE3D080L04	87	4	Δ	1.3	2503	5.0	3.7	2.94	1.5		
IE3D090S04	50	4	Y	1.1	1440	7.3	3.7	2.5	1.8		
IE3D090S04	87	4	Δ	1.91	2494	7.3	3.7	4.33	1.0		
IE3D090LX04	50	4	Y	1.5	1445	9.8	4.9	3.4	1.3		
IE3D090LX04	87	4	Δ	2.6	2503	9.8	4.9	5.89		1.7	
IE3D100KX04	50	4	Y	2.2	1450	14.5	3.8	4.55		2.2	
IE3D100KX04	87	4	Δ	3.81	2511	14.5	3.8	7.88		1.3	
IE3D100LX04	50	4	Y	3.0	1450	19.8	4	6.35		1.6	
IE3D100LX04	87	4	Δ	5.2	2511	19.8	4	11			1.7
IE3D112M04	50	4	Δ	4.0	1465	26.1	4.5	7.9		1.3	
IE3D132S04	50	4	Δ	5.5	1480	35	5.4	12			1.6
IE3D132M04	50	4	Δ	7.5	1475	49	3.9	14.5			1.3

6.4 Accessories

You can find information about the available accessories in the following chapters.

6.4.1 Safety technology

Information

Note that the drive controller is delivered as a standard version without safety technology (SZ6 option). If you want a drive controller with integrated safety technology, you must order it together with the drive controller. The safety modules are an integrated part of the drive controllers and must not be modified.

SZ6 option – Without safety technology

ID No. 56660
Standard version.

SR6 safety module – STO using terminals

ID No. 56661
Optional accessory for the use of the Safe Torque Off safety function (STO) in safety-relevant applications (PL e, SIL 3) in accordance with DIN EN ISO 13849-1 and DIN EN 61800-5-2. Connection to higher-level safety circuit through terminal X12 (included in the terminal set scope of delivery).

SY6 safety module – STO and SS1 using FSoE

Safety over EtherCAT

ID No. 56662
Optional accessory for the use of the Safe Torque Off (STO) and Safe Stop 1 (SS1) safety functions in safety-relevant applications (PL e, SIL 3) in accordance with DIN EN ISO 13849-1 and DIN EN 61800-5-2. Connection to the higher-level safety circuit using Fail Safe over EtherCAT (FSoE).

6.4.2 Communication

The drive controller has two interfaces for the fieldbus connection on the top of the device as well as an Ethernet service interface on the front of the device. Cables for the connection are available separately.

EtherCAT or PROFINET fieldbus system

EtherCAT

PROFINET

Please specify the desired fieldbus system when placing your purchase order for the base device.

EtherCAT cables

Ethernet patch cable, CAT5e, yellow.
The following designs are available:
ID No. 49313: Length approx. 0.2 m.
ID No. 49314: Length approx. 0.35 m.

PC connecting cables

ID No. 49857
Cable for connecting the X9 service interface to the PC, CAT5e, blue, 5 m.

USB 2.0 Ethernet adapter

ID No. 49940
Adapter for connecting Ethernet to a USB port.

6.4.3 Terminal set

For connection, you need the fitting terminal set for each SC6 drive controller.

Terminal set for drive controllers

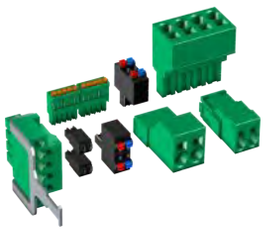

The following designs are available:
ID No. 138652
Terminal set for SC6A062Z/Y.
ID No. 138653
Terminal set for SC6A162Z/Y.
ID No. 138654
Terminal set for SC6A261Z/Y.

6.4.4 DC link connection

If you want to connect SC6 drive controllers into the DC link group, you will need Quick DC-Link modules of type DL6B.

You receive the DL6B rear section modules in different designs for a horizontal connection, suitable for the size of the drive controller.

The quick fastening clamps for attaching the copper rails and an insulation connection piece are contained in the scope of delivery. The copper rails are not included in the scope of delivery. These must have a cross-section of 5 x 12 mm. Insulation end sections are available separately.

Quick DC-Link DL6B for drive controllers

The following designs are available:
DL6B10
ID No. 56655
Rear section module for drive controllers of size 0:
SC6A062
DL6B11
ID No. 56656
Rear section module for drive controllers of size 1 or 2:
SC6A162 and SC6A261

Quick DC-Link DL6B insulation end section

ID No. 56659
Insulation end sections for the left and right termination of the group, 2 pcs.

6.4.5 Braking resistor

In addition to the drive controller, STOBER offers braking resistors in different sizes and performance classes described below. For the selection, note the minimum permitted braking resistances specified in the technical data of the individual types of drive controllers.

6.4.5.1 Tubular fixed resistor FZMU, FZZMU

Type	FZMU 400×65	FZZMU 400×65
ID No.	49010	53895
SC6A062	X	—
SC6A162	(X)	X
SC6A261	(X)	X

Tab. 26: Assignment for FZMU, FZZMU braking resistor – SC6 drive controller

X	Recommended
(X)	Possible
—	Not possible

Properties

Specification	FZMU 400×65	FZZMU 400×65
ID No.	49010	53895
Type	Tubular fixed resistor	Tubular fixed resistor
Resistance [Ω]	100	47
Power [W]	600	1200
Therm. time const. τ_{th} [s]	40	40
Pulse power for < 1 s [kW]	18	36
U_{max} [V]	848	848
Weight [kg]	Approx. 2.2	Approx. 4.2
Protection class	IP20	IP20
Test symbols	c UL us CE	c UL us CE

Tab. 27: FZMU, FZZMU specification

Dimensions

Dimension	FZMU 400×65	FZZMU 400×65
ID No.	49010	53895
L x D	400 × 65	400 × 65
H	120	120
K	6.5 × 12	6.5 × 12
M	430	426
O	485	450
R	92	185
U	64	150
X	10	10

Tab. 28: FZMU, FZZMU dimensions [mm]

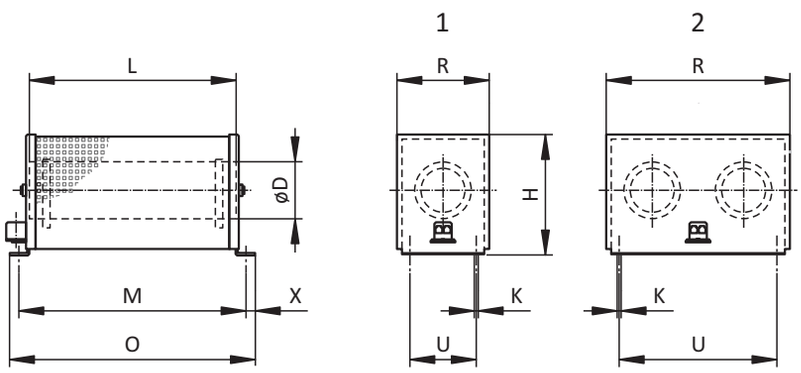

Fig. 4: FZMU (1), FZZMU (2) dimensional drawing

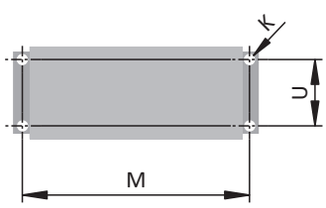

Fig. 5: FZMU, FZZMU drilling diagram

6.4.5.2 Flat resistor GVADU, GBADU

Type	GVADU 210×20	GBADU 265×30	GBADU 335×30
ID No.	55441	55442	55443
SC6A062	X	X	—
SC6A162	(X)	(X)	X
SC6A261	(X)	(X)	X

Tab. 29: Assignment for GVADU, GBADU braking resistor – SC6 drive controller

X	Recommended
(X)	Possible
—	Not possible

Properties

Specification	GVADU 210×20	GBADU 265×30	GBADU 335×30
ID No.	55441	55442	55443
Type	Flat resistor	Flat resistor	Flat resistor
Resistance [Ω]	100	100	47
Power [W]	150	300	400
Therm. time const. τ_{th} [s]	60	60	60
Pulse power for < 1 s [kW]	3.3	6.6	8.8
U_{max} [V]	848	848	848
Cable design	Radox	FEP	FEP
Cable length [mm]	500	500	500
Conductor cross-section [AWG]	18/19 (0.82 mm²)	14/19 (1.9 mm²)	14/19 (1.9 mm²)
Weight [g]	300	950	1200
Protection class	IP54	IP54	IP54
Test symbols			

Tab. 30: GVADU, GBADU specification

Dimensions

Dimension	GVADU 210×20	GBADU 265×30	GBADU 335×30
ID No.	55441	55442	55443
A	210	265	335
H	192	246	316
C	20	30	30
D	40	60	60
E	18.2	28.8	28.8
F	6.2	10.8	10.8
G	2	3	3
K	2.5	4	4
J	4.3	5.3	5.3
β	65°	73°	73°

Tab. 31: GVADU, GBADU dimensions [mm]

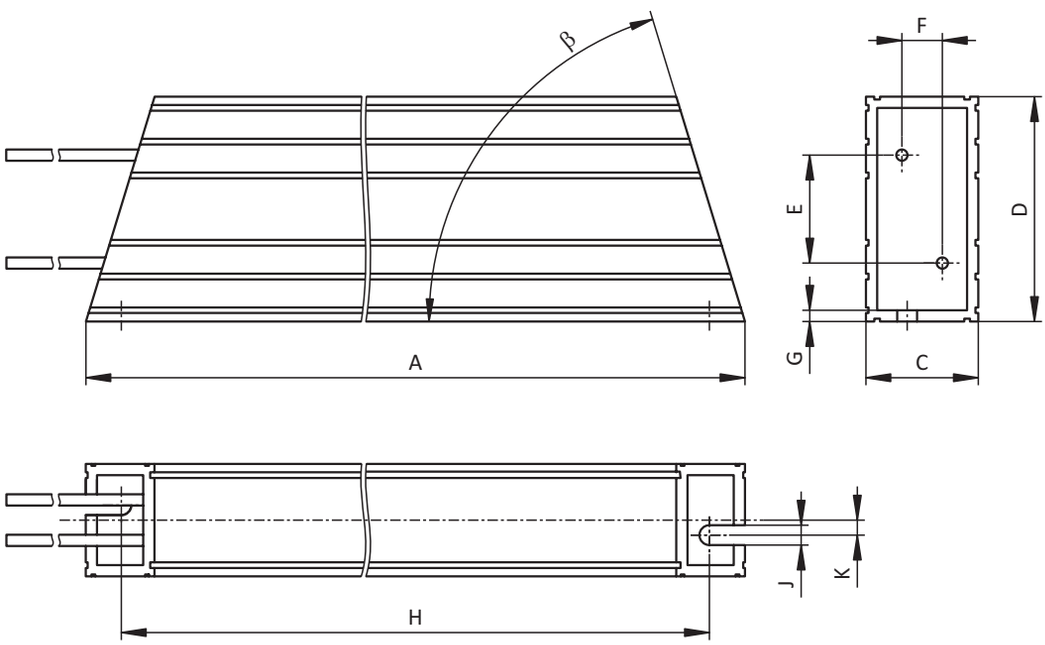

Fig. 6: GVADU, GBADU dimensional drawing

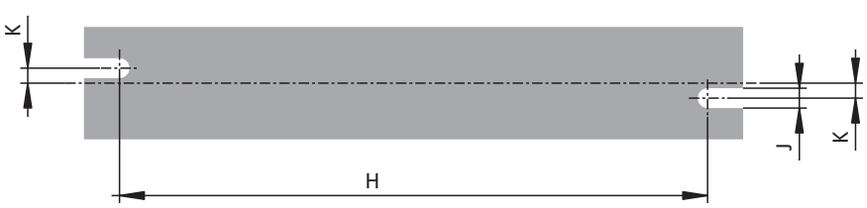

Fig. 7: GVADU, GBADU drilling diagram

6.4.6 HTL-to-TTL adapter

HT6 HTL-to-TTL adapter

ID No. 56665
Adapters for SC6 and SI6 series drive controllers for level conversion from HTL signals to TTL signals.
It is used to connect an HTL differential incremental encoder to terminal X4 of the drive controller.

6.5 Further information

6.5.1 Directives and standards

The following European directives and standards are relevant for drive controllers:

- Machinery Directive 2006/42/EC
- Low Voltage Directive 2014/35/EU
- EMC Directive 2014/30/EU
- EN 61326-3-1:2008
- EN 61800-3:2004 and A1:2012
- EN 61800-5-1:2007
- EN 61800-5-2:2007
- EN 50178:1997
- IEC 61784-3:2010

6.5.2 Symbols, marks and test symbols

Grounding symbol
Grounding symbol in accordance with IEC 60417, symbol 5019.

RoHS lead-free mark
Marking in accordance with RoHS directive 2011-65-EU.

CE mark
Manufacturer's self declaration: The product meets the requirements of EU directives.

UL recognized component mark
This component or material is recognized by UL. Representative samples of this product have been evaluated by UL and meet applicable requirements.

6.5.3 Additional documentation

Additional documentation related to the product can be found at http://www.stoeber.de/en/downloads/

Enter the ID of the documentation in the Search... field.

Documentation	ID
Manual for SC6 drive controllers	442790

7 SI6 Drive controllers

Table of contents

7.1 Overview ... 238

7.1.1 Features ... 239

7.1.2 Software components ... 240

7.1.3 Application training ... 240

7.2 Technical data ... 241

7.2.1 General technical data ... 241

7.2.2 Drive controller ... 242

7.2.3 Supply module ... 249

7.2.4 DC link connection ... 252

7.2.5 Minimum clearances ... 254

7.3 Drive controller/motor combinations ... 255

7.4 Accessories ... 256

7.4.1 Safety technology ... 256

7.4.2 Communication ... 256

7.4.3 Terminal set ... 257

7.4.4 DC link connection ... 257

7.4.5 Braking resistor ... 259

7.4.6 Choke ... 263

7.4.7 HTL-to-TTL adapter ... 270

7.5 Further information ... 270

7.5.1 Directives and standards ... 270

7.5.2 Symbols, marks and test symbols ... 270

7.5.3 Additional documentation ... 270

7 Drive controllers

SI6

7.1 Overview

Drive control in a multi-axis drive system

Features

- Single or double-axis controller with a nominal output current up to 50 A and 250% overload capacity
- Supply modules up to 20 kW nominal power
- Sensorless position control by STOBER Lean motors
- Control of rotary synchronous servo motors, asynchronous motors and torque motors
- HIPERFACE DSL One Cable Solution
- Electronic motor nameplate via HIPERFACE DSL and EnDat 2.2 digital encoder interfaces
- Integrated EtherCAT or PROFINET communication
- STO safety technology using terminals or STO and SS1 using FSoE (Safety over EtherCAT): SIL 3, PL e (cat. 4)
- Integrated brake control
- Energy supply over DC link connection
- Single-ended nominal power consumption on double-axis controllers for operation of motors with different power
- Variable feed-in power using supply modules that can be connected in parallel

7.1.1 Features

The completely re-designed STOBER multi-axis drive system consists of the SI6 drive controller and PS6 supply module combination. Matching Quick DC-Link modules handle the energy supply for the networked drive controller. The SI6 drive controller is available in four sizes as a single or double-axis controller with a nominal output current of up to 50 A. The PS6 supply module is available in two sizes with a nominal power of 10 kW or 20 kW. As an economically attractive system with a minimized device width, the SI6 opens a new dimension in multi-axis applications.

The optimized vector control, sensorless vector control, U/f slip-compensated and U/f controller control types are available for use with asynchronous motors.

Drive control in multi-axis drive systems with SI6 and PS6

As small as a paperback

You save valuable space in your control cabinet because, with a width of just 45 mm, this drive controller is the most compact solution on the market. It offers all the features that a designer requires.

Dimension capacities precisely

4 axes? 16? Or even 97? A single SI6 drive controller can control up to two axes. Thanks to the multi-axis drive system, the number of motors or axes to be controlled can be scaled without limit. If required, SI6 drive controllers can be combined with stand-alone units from the STOBER SC6 or SD6 series. For the general energy supply, the drive controllers from the SI6, SC6 and SD6 series can be connected to each other using Quick DC-Link modules.

Tailored energy usage

The SI6 drive controllers are connected to a central supply module. There is no need for decentralized supply modules or fuses and cabling for each axis. When using double-axis modules, the unused power reserves of one axis can be used for other axes. A significant reduction in space and cost!

Fewer clicks, less wiring

Installation is exceptionally simple. No difficult wiring. The patented Quick DC-Link modules allow for a simple “click” into the standard copper rails, as well as the simple installation and connection of the drive controllers.

Safety functions

The safety concept of the drive controller is based on the STO (Safe Torque Off) function. The concept corresponds to SIL 3 according to DIN EN 61800-5-2 and PL e (Cat. 4) according to DIN EN ISO 13849-1. For double-axis controllers, the STO safety function has a two-channel structure that acts upon both axes. For connection to a higher-level safety circuit, different interfaces are available (terminals or FSoE).

Heavy duty

There is an extremely robust design concealed behind the elegant exterior. All components—from the stable, well-shielded sheet steel housing to the motor connectors—far exceed the set values of industry standards. The inside is also anything but small-scale: ample computer capacities, high-quality components, careful workmanship.

7.1.2 Software components

Project configuration and commissioning

The 6th generation of DriveControlSuite project configuration and commissioning software has all the functions for the efficient use of drive controllers in single-axis and multi-axis applications. The program guides you step by step through the complete project configuration and parameterization process using wizards.

Open communication

The Ethernet-based EtherCAT and PROFINET fieldbus systems are available in the drive controller.

Applications

Controller-based motion control is recommended for the central motion control of complex machines.

Using the controller-based operating modes of the CiA 402 application, you can implement applications with synchronized, cyclic set value specification (csp, csv, cst, ip) by a motion controller. In addition, the drive controllers can also independently handle motion tasks, such as referencing and jogging during commissioning.

Drive-based Drive Based and Drive Based Synchronous applications and drive-based operating modes (pp, pv, pt) of the CiA 402 application are also available for torque/force mode, velocity mode or positioning mode.

7.1.3 Application training

STOBER offers a multi-level training program that focuses essentially on application programming of the motion controller and drive controller.

G6 Basic

Training content: System overview, installation and commissioning of the drive controller. Use of option modules. Parameterization, commissioning and diagnostics using the commissioning software. Remote maintenance. Basics of controller optimization. Configuration of the drive train. Integrated software functions. Software applications. Connection to a higher-level controller. Basics of safety technology. Practical exercises on training topics.

Software used: DriveControlSuite.

G6 Advanced

Training content: Special knowledge for regulating, control and safety technology. Practical exercises on training topics.

7.2 Technical data

Technical data for the drive controllers, supply modules and accessories can be found in the following chapters.

7.2.1 General technical data

The following specifications apply equally to the SI6 drive controller and the PS6 supply module.

Device features	
Protection class of the device	IP20
Protection class of the installation space	At least IP54
Radio interference suppression	Integrated line filter in accordance with DIN EN 61800-3:2012, interference emission class C3
Overvoltage category	III in accordance with DIN EN 61800-5-1:2008
Test symbols	

Tab. 1: Device features

Transport and storage conditions	
Storage/ transport temperature	−20 °C to +70 °C Maximum change: 20 K/h
Relative humidity	Maximum relative humidity 85%, non-condensing
Vibration (transport) in accordance with DIN EN 60068-2-6	5 Hz ≤ f ≤ 9 Hz: 3.5 mm 9 Hz ≤ f ≤ 200 Hz: 10 m/s² 200 Hz ≤ f ≤ 500 Hz: 15 m/s²
Fall height for freefall[1] Weight < 100 kg in accordance with DIN EN 61800-2 (or DIN EN 60721-3-2:1997, class 2M1)	0.25 m

Tab. 2: Transport and storage conditions

Operating conditions	
Surrounding temperature during operation	0 °C to 45 °C with nominal data 45 °C to 55 °C with derating −2.5% / K
Relative humidity	Maximum relative humidity 85%, non-condensing
Installation altitude	0 m to 1000 m above sea level without restrictions 1000 m to 2000 m above sea level with −1.5%/100 m derating
Pollution degree	Pollution degree 2 in accordance with EN 50178
Ventilation	Installed fan
Vibration (operation) in accordance with DIN EN 60068-2-6	5 Hz ≤ f ≤ 9 Hz: 0.35 mm 9 Hz ≤ f ≤ 200 Hz: 1 m/s²

Tab. 3: Operating conditions

Discharge times	
Self-discharge of DC link	15 min
DC link circuit fast discharge	Thanks to PS6 supply module in combination with a braking resistor: < 1 min

Tab. 4: Discharge times of the DC link circuit

[1] Only valid for components in original packaging

7.2.2 Drive controller

The following chapters contain specifications for the electrical data, dimensions and weight of the drive controller.

7.2.2.1 Type designation

SI	6	A	0	6	1	Z

Tab. 5: Example code for SI6 type designation

Code	Designation	Design
SI	Series	ServoInverter
6	Generation	Generation 6
A	Version	
0 – 3	Size	
6	Power output stage	Power output stage within the size
1	Axis controller	Single-axis controller
2		Double-axis controller
Z	Safety technology	SZ6: Without safety technology
R		SR6: STO using terminals
Y		SY6: STO and SS1 using FSoE

Tab. 6: Meaning of the SI6 example code

7.2.2.2 Sizes

Type	ID No.	Size	Axis controller
SI6A061	56645	Size 0	Single-axis controller
SI6A062	56646	Size 0	Double-axis controller
SI6A161	56647	Size 1	Single-axis controller
SI6A162	56648	Size 1	Double-axis controller
SI6A261	56649	Size 2	Single-axis controller
SI6A262	56653	Size 2	Double-axis controller
SI6A361	56654	Size 3	Single-axis controller

Tab. 7: Available SI6 types and sizes

SI6 in sizes 0 to 3

Note that the basic device is delivered without terminals. Suitable terminal sets are available separately for each size.

7.2.2.3 Electrical data

The electrical data of the available SI6 sizes can be found in the following sections.

An explanation of the formula symbols used can be found in the chapter [▷ 13.1].

7.2.2.3.1 Control unit

Electrical data	All types
U_{1CU}	24 V_{DC}, +20%/–15%
I_{1maxCU}	0.5 A

Tab. 8: Control unit electrical data

7.2.2.3.2 Power unit: Size 0

Electrical data	SI6A061	SI6A062
U_{1PU}	280 – 800 V_{DC}	
f_{2PU}	0 – 700 Hz	
U_{2PU}	0 – max. $\frac{U_{1PU}}{\sqrt{2}}$	
C_{PU}	180 µF	270 µF

Tab. 9: SI6 electrical data, size 0

Nominal currents up to +45 °C (in the control cabinet)

Electrical data	SI6A061	SI6A062
$f_{PWM,PU}$	4 kHz	
$I_{2N,PU}$	5 A	2 × 5 A
I_{2maxPU}	210% for 2 s	

Tab. 10: SI6 electrical data, size 0, for 4 kHz clock frequency

Electrical data	SI6A061	SI6A062
$f_{PWM,PU}$	8 kHz	
$I_{2N,PU}$	4.5 A	2 × 4.5 A
I_{2maxPU}	250% for 2 s	

Tab. 11: SI6 electrical data, size 0, for 8 kHz clock frequency

7.2.2.3.3 Power unit: Size 1

Electrical data	SI6A161	SI6A162
U_{1PU}	280 – 800 V_{DC}	
f_{2PU}	0 – 700 Hz	
U_{2PU}	0 – max. $\frac{U_{1PU}}{\sqrt{2}}$	
C_{PU}	470 µF	940 µF

Tab. 12: SI6 electrical data, size 1

Nominal currents up to +45 °C (in the control cabinet)

Electrical data	SI6A161	SI6A162
$f_{PWM,PU}$	4 kHz	
$I_{2N,PU}$	12 A	2 × 12 A
I_{2maxPU}	210% for 2 s	

Tab. 13: SI6 electrical data, size 1, for 4 kHz clock frequency

Electrical data	SI6A161	SI6A162
$f_{PWM,PU}$	8 kHz	
$I_{2N,PU}$	10 A	2 × 10 A
I_{2maxPU}	250% for 2 s	

Tab. 14: SI6 electrical data, size 1, for 8 kHz clock frequency

7.2.2.3.4 Power unit: Size 2

Electrical data	SI6A261	SI6A262
U_{1PU}	280 – 800 V_{DC}	
f_{2PU}	0 – 700 Hz	
U_{2PU}	0 – max. $\frac{U_{1PU}}{\sqrt{2}}$	
C_{PU}	940 µF	2250 µF

Tab. 15: SI6 electrical data, size 2

Nominal currents up to +45 °C (in the control cabinet)

Electrical data	SI6A261	SI6A262
$f_{PWM,PU}$	4 kHz	
$I_{2N,PU}$	22 A	2 × 25 A
I_{2maxPU}	210% for 2 s	

Tab. 16: SI6 electrical data, size 2, for 4 kHz clock frequency

Electrical data	SI6A261	SI6A262
$f_{PWM,PU}$	8 kHz	
$I_{2N,PU}$	20 A	2 × 20 A
I_{2maxPU}	250% for 2 s	

Tab. 17: SI6 electrical data, size 2, for 8 kHz clock frequency

7.2.2.3.5 Power unit: Size 3

Electrical data	SI6A361
U_{1PU}	280 – 800 V_{DC}
f_{2PU}	0 – 700 Hz
U_{2PU}	0 – max. $\frac{U_{1PU}}{\sqrt{2}}$
C_{PU}	2250 µF

Tab. 18: SI6 electrical data, size 3

Nominal currents up to +45 °C (in the control cabinet)

Electrical data	SI6A361
$f_{PWM,PU}$	4 kHz
$I_{2N,PU}$	50 A
I_{2maxPU}	210% for 2 s

Tab. 19: SI6 electrical data, size 3, for 4 kHz clock frequency

Electrical data	SI6A361
$f_{PWM,PU}$	8 kHz
$I_{2N,PU}$	40 A
I_{2maxPU}	250% for 2 s

Tab. 20: SI6 electrical data, size 3, for 8 kHz clock frequency

7.2.2.3.6 Single-ended nominal power consumption on double-axis controllers

Operating two motors on one double-axis controller makes it possible to operate one of the motors with a continuous current above the nominal current of drive controller if the continuous current of the second connected motor is lower than the nominal current of drive controller. This enables economical combinations of double-axis controllers and motors.

The nominal output current for axis B can be determined using the following formula if the output current for axis A is known:

Example 1

$$I_{2PU(B)} = I_{2N,PU} - \left(I_{2PU(A)} - I_{2N,PU} \right) \times \frac{3}{5} \qquad \text{where} \qquad 0 \le I_{2PU(A)} \le I_{2N,PU}$$

Example 2

$$I_{2PU(B)} = I_{2N,PU} - \left(I_{2PU(A)} - I_{2N,PU} \right) \times \frac{5}{3} \qquad \text{where} \qquad I_{2N,PU} \le I_{2PU(A)} \le 1{,}6 \times I_{2N,PU}$$

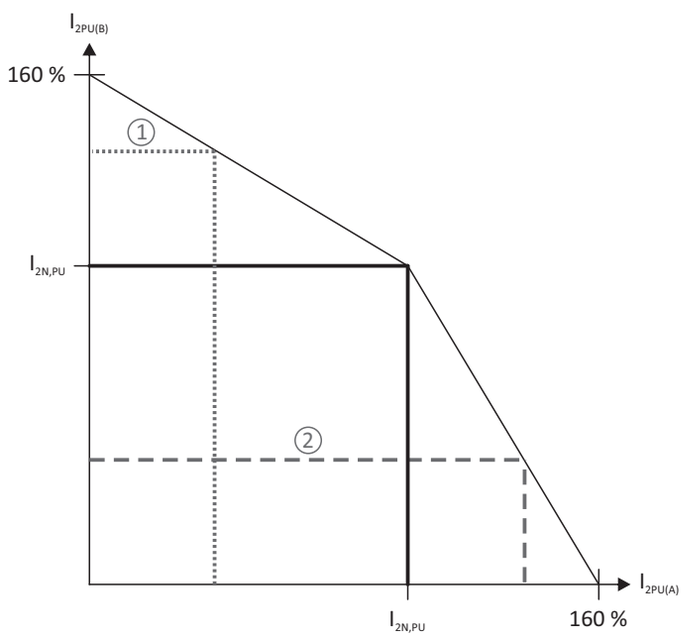

Fig. 1: Asymmetric load on double-axis controllers

Information

Note that the available maximum currents I_{2maxPU} of the axis controllers are also relative to the nominal output current $I_{2N,PU}$ for single-ended nominal power consumption.

7.2.2.3.7 Power loss data in accordance with EN 61800-9-2

Type	Nominal current $I_{2N,PU}$	Apparent power	Absolute losses $P_{V,CU}$[2]	Operating points[3]								IE class[4]	Comparison[5]
				(0/25)	(0/50)	(0/100)	(50/25)	(50/50)	(50/100)	(90/50)	(90/100)		
				Relative losses									
	[A]	[kVA]	[W]	[%]									
SI6A06x	5	3.5	Max. 10	0.71	0.86	1.33	0.76	0.97	1.61	1.13	2.13	IE2	
SI6A16x	12	8.3	Max. 10	0.55	0.71	1.19	0.59	0.80	1.44	0.94	1.87	IE2	
SI6A261	22	16.6	Max. 10	0.55	0.71	1.19	0.59	0.80	1.44	0.94	1.87	IE2	
SI6A262	25	17.3	Max. 10	0.45	0.62	1.12	0.50	0.74	1.47	0.95	2.12	IE2	
SI6A361	50	34.6	Max. 10	0.45	0.62	1.12	0.50	0.74	1.47	0.95	2.12	IE2	
				Absolute losses P_V									
	[A]	[kVA]	[W]	[W]									[%]
SI6A06x	5	3.5	Max. 10	25	30.2	46.5	26.5	33.8	56.5	39.5	74.4	IE2	24.9
SI6A16x	12	8.3	Max. 10	45.7	58.7	98.7	49.1	66.3	119.6	78.1	155.4	IE2	26.7
SI6A261	22	16.6	Max. 10	91.5	117.4	197.3	98.2	132.6	239.2	156.2	310.8	IE2	30.8
SI6A262	25	17.3	Max. 10	77.9	106.5	193.0	87.1	127.9	254.3	163.8	367.6	IE2	36.4
SI6A361	50	34.6	Max. 10	155.8	213.1	386.0	174.3	255.8	508.6	327.6	735.2	IE2	39.5

Tab. 21: Power loss data in accordance with EN 61800-9-2 for one axis of a SI6 drive controller

General conditions

The specified losses apply to an axis of a drive controller and take into account the proportionate losses of the PS6 supply module for that axis.

For a group with a total of x axes, the values are to be multiplied by the number of axis controllers (x), e.g. x = 4 for 1 × PS6 and 2 × SI6A062.

The loss data applies to drive controllers without accessories.

The power loss calculation is based on a three-phase supply voltage with 400 V_{AC}/50 Hz.

The calculated data includes a supplement of 10% in accordance with EN 61800-9-2.

The power loss specifications refer to a clock frequency of 4 kHz.

The absolute losses for a power unit that is switched off refer to the 24 V_{DC} power supply of the control electronics.

[2] Absolute losses for a power unit that is switched off

[3] Operating points for relative motor stator frequency in % and relative torque current in %

[4] IE class in accordance with EN 61800-9-2

[5] Comparison of the losses for the reference related to IE2 in the nominal point (90, 100)

7.2.2.4 Derating

When dimensioning the drive controller, observe the derating of the nominal output current as a function of the clock frequency, surrounding temperature and installation altitude. There is no restriction for a surrounding temperature from 0 °C to 45 °C and an installation altitude of 0 m to 1000 m. The details given below apply to values outside these ranges.

7.2.2.4.1 Effect of the clock frequency

Changing the clock frequency f_{PWM} affects the amount of noise produced by the drive, among other things. However, increasing the clock frequency results in increased losses. During project configuration, define the highest clock frequency and use it to determine the nominal output current $I_{2N,PU}$ for dimensioning the drive controller.

Type	$I_{2N,PU}$ 4 kHz [A]	$I_{2N,PU}$ 8 kHz [A]	$I_{2N,PU}$ 16 kHz [A]
SI6A061	5	4.5	3.5
SI6A062	2 × 5	2 × 4.5	2 × 3.5
SI6A161	12	10	6
SI6A162	2 × 12	2 × 10	2 × 6
SI6A261	22	20	10
SI6A262	2 × 25	2 × 20	2 × 10
SI6A361	50	40	—

Tab. 22: Nominal output current $I_{2N,PU}$ dependent on the clock frequency

7.2.2.4.2 Effect of the surrounding temperature

Derating as a function of the surrounding temperature is determined as follows:

- 0 °C to 45 °C: No restrictions (D_T = 100%)
- 45 °C to 55 °C: Derating −2.5%/K

Example

The drive controller needs to be operated at 50 °C.

The derating factor D_T is calculated as follows
D_T= 100% − 5 × 2.5% = 87.5%

7.2.2.4.3 Effect of the installation altitude

Derating as a function of the installation altitude is determined as follows:

- 0 m to 1000 m: No restriction (D_{IA} = 100%)
- 1000 m to 2000 m: Derating −1.5%/100 m

Example

The drive controller needs to be installed at an altitude of 1500 m above sea level.

The derating factor D_{IA} is calculated as follows:
D_{IA} = 100% − 5 × 1.5% = 92.5%

7.2.2.4.4 Calculating the derating

Follow these steps for the calculation:

1. Determine the highest clock frequency (f_{PWM}) that will be used during operation and use it to determine the nominal current $I_{2N,PU}$.
2. Determine the derating factors for installation altitude and surrounding temperature.
3. Calculate the reduced nominal current $I_{2N,PU(red)}$ in accordance with the following formula:
   $I_{2N,PU(red)} = I_{2N,PU} \times D_T \times D_{IA}$

Example

A drive controller of type SI6A061 needs to be operated at a clock frequency of 8 kHz at an altitude of 1500 m above sea level and a surrounding temperature of 50 °C.

The nominal current of the SI6A061 at 8 kHz is 4.5 A. The derating factor D_T is calculated as follows:
D_T = 100% − 5 × 2.5% = 87.5%

The derating factor D_{IA} is calculated as follows:
D_{IA} = 100% − 5 × 1.5% = 92.5%

The output current of importance for the project configuration is:
$I_{2N,PU(red)}$ = 4.5 A × 0.875 × 0.925 = 3.64 A

7.2.2.5 Dimensions

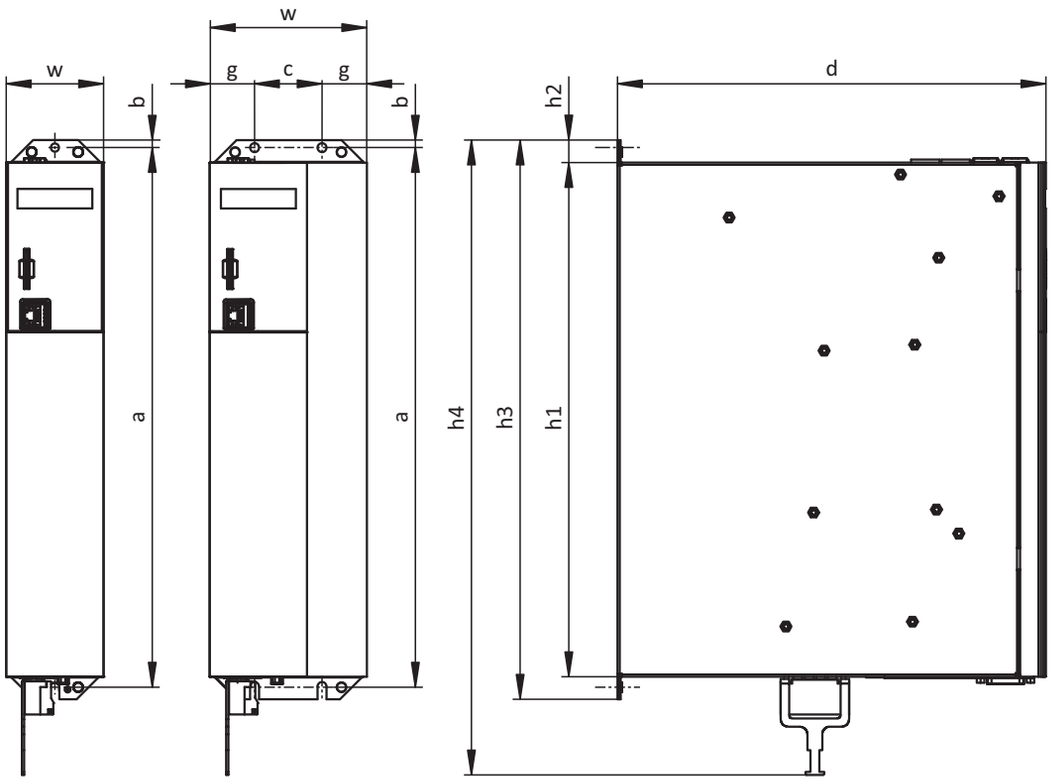

Fig. 2: SI6 dimensional drawing

Dimension			Size 0	Size 1	Size 2[6]	Size 2[7]	Size 3
Drive controllers	Width	w	45	65		105	
	Depth	d	265	286			
	Body height	h1	343				
	Fastening clip height	h2	15				
	Height incl. fastening clips	h3	373				
	Total height incl. shield connection	h4	423				
Fastening holes (M5)	Vertical distance	a	360+2				
	Vertical distance to the upper edge	b	5				
	Horizontal spacing of the fastening holes	c	45				
	Horizontal distance to the side edge	g	30				

Tab. 23: SI6 dimensions [mm]

[6] Single-axis controller

[7] Double-axis controller

7.2.2.6 Weight

Type	Weight without packaging [g]	Weight with packaging [g]
SI6A061	2980	4600
SI6A062	3460	5060
SI6A161	3880	5260
SI6A162	4820	6240
SI6A261	4760	6180
SI6A262	6240	7420
SI6A361	6180	7360

Tab. 24: SI6 weight [g]

7.2.3 Supply module

The following section contains specifications for the electrical data, dimensions and weight of the PS6 supply module.

7.2.3.1 Type designation

PS	6	A	2	4

Tab. 25: Example code for PS6 type designation

Code	Designation	Design
PS	Series	PowerSupply
6	Generation	Generation 6
A	Version	
2 – 3	Size	
4	Power output stage	

Tab. 26: Meaning of the PS6 example code

7.2.3.2 Sizes

Type	ID No.	Size
PS6A24	56650	Size 2
PS6A34	56651	Size 3

Tab. 27: Available PS6 types and sizes

PS6 in sizes 2 and 3

Note that the basic device is delivered without terminals. Suitable terminal sets are available separately for each size.

7.2.3.3 Electrical data

The electrical data of the available PS6 sizes as well as the properties of the brake chopper can be found in the following sections.

Information

The STO safety function is available for safe stopping as an alternative to continuous, cyclical power-on/power-off operation.

An explanation of the formula symbols used can be found in the chapter [▶ 13.1].

7.2.3.3.1 Control unit

Electrical data	All types
U_{1CU}	24 V_{DC}, +20%/–15%
I_{1maxCU}	0.5 A

Tab. 28: Control unit electrical data

7.2.3.3.2 Power unit: Size 2

Electrical data	PS6A24
U_{1PU}	3 × 400 V_{AC}, +32%/–50%, 50/60 Hz; 3 × 480 V_{AC}, +10%/–58%, 50/60 Hz
U_{2PU}	√2 × U_{1PU}
$P_{N,PU}$	10 kW
$I_{1N,PU}$	25 A
I_{1maxPU}	$I_{1N,PU}$ × 180% for 5 s; $I_{1N,PU}$ × 150% for 30 s
C_{maxPU}	5000 µF

Tab. 29: PS6 electrical data, size 2

7.2.3.3.3 Power unit: Size 3

Electrical data	PS6A34
U_{1PU}	3 × 400 V_{AC}, +32%/–50%, 50/60 Hz; 3 × 480 V_{AC}, +10%/–58%, 50/60 Hz
U_{2PU}	√2 × U_{1PU}
$P_{N,PU}$	20 kW
$I_{1N,PU}$	50 A
I_{1maxPU}	$I_{1N,PU}$ × 180% for 5 s; $I_{1N,PU}$ × 150% for 30 s
C_{maxPU}	10000 µF

Tab. 30: PS6 electrical data, size 3

7.2.3.3.4 Parallel connection

The power and current increase if supply modules are connected in parallel. Take into account that the total is derated by a factor of 0.8 in doing so.

The charging capacity of the supply modules can be increased by a parallel connection only if the power grid supply is connected to all supply modules simultaneously. Increasing the charging capacity also requires derating the total by a factor of 0.8.

The following table shows example combinations for parallel connection.

Electrical data	2 x PS6A24	3 x PS6A24	2 x PS6A34	3 x PS6A34
$P_{N,PU}$	16 kW	24 kW	32 kW	48 kW
$I_{1N,PU}$	40 A	60 A	80 A	120 A
C_{maxPU}	8000 µF	12000 µF	16000 µF	24000 µF

Tab. 31: Electrical data for parallel connection: Example combinations

The following general conditions apply to the parallel connection of several PS6 supply modules:

- Only the same sizes may be connected in parallel.
- You can connect a maximum of 3 PS6A34 in parallel.

7.2.3.3.5 Brake chopper

Electrical data	All types
U_{onCH}	780 – 800 V_{DC}
U_{offCH}	740 – 760 V_{DC}
R_{2minRB}	22 Ω
P_{maxRB}	29.1 kW
P_{effRB}	13.2 kW

Tab. 32: Brake chopper electrical data

7.2.3.3.6 Fast discharge

Fast discharge is activated when no power supply is present for 20 s and the DC link voltage has reduced over this time. For active fast discharge, the DC link is discharged via the brake chopper and the braking resistor. Fast discharge does not take place for constant or increasing DC link voltage as this behavior indicates a second supply module in the DC link group. If the temperature sensor of the braking resistor is active, the fast discharge also remains off.

7.2.3.4 Dimensions

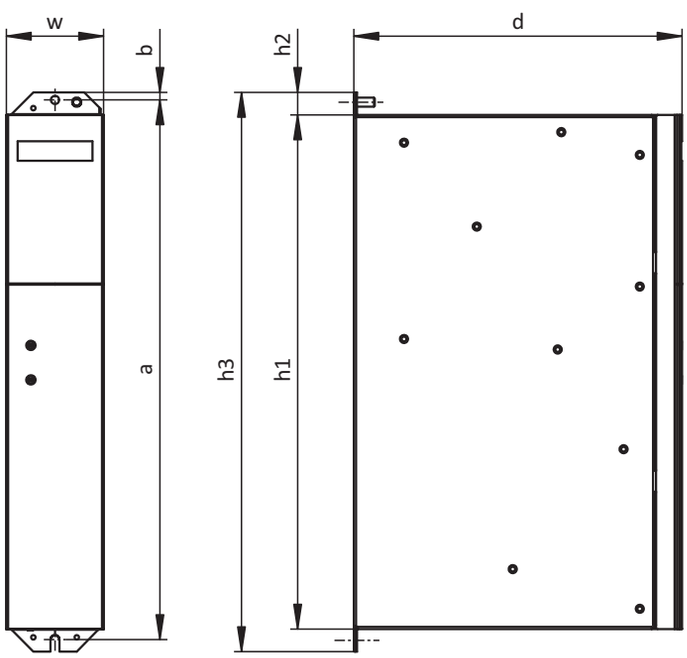

Fig. 3: PS6 dimensional drawing

Dimension			Size 2	Size 3
Supply module	Width	w	45	65
	Depth	d	204	219
	Body height	h1	343	
	Fastening clip height	h2	15	
	Height incl. fastening clips	h3	373	
Fastening holes (M5)	Vertical distance	a	360+2	
	Vertical distance to the upper edge	b	5	

Tab. 33: PS6 dimensions [mm]

7.2.3.5 Weight

Type	Weight without packaging [g]	Weight with packaging [g]
PS6A24	2680	4180
PS6A34	3820	4920

Tab. 34: PS6 weight [g]

7.2.4 DC link connection

The following section contains specifications for the electrical data, dimensions and weight of the DL6B modules Quick DC-Link.

7.2.4.1 General technical data

The following information applies to all Quick DC-Link modules and corresponds to the general technical data for the base device.

Device features	
Protection class of the device	IP20
Protection class of the installation space	At least IP54

Tab. 35: Device features

Transport and storage conditions	
Storage/ transport temperature	−20 °C to +70 °C Maximum change: 20 K/h
Relative humidity	Maximum relative humidity 85%, non-condensing
Vibration (transport) in accordance with DIN EN 60068-2-6	5 Hz ≤ f ≤ 9 Hz: 3.5 mm 9 Hz ≤ f ≤ 200 Hz: 10 m/s² 200 Hz ≤ f ≤ 500 Hz: 15 m/s²
Fall height for freefall[8] Weight < 100 kg in accordance with DIN EN 61800-2 (or DIN EN 60721-3-2:1997, class 2M1)	0.25 m

Tab. 36: Transport and storage conditions

Operating conditions	
Surrounding temperature during operation	0 °C to 45 °C with nominal data 45 °C to 55 °C with derating −2.5% / K
Relative humidity	Maximum relative humidity 85%, non-condensing
Installation altitude	0 m to 1000 m above sea level without restrictions 1000 m to 2000 m above sea level with −1.5%/100 m derating
Pollution degree	Pollution degree 2 in accordance with EN 50178
Vibration (operation) in accordance with DIN EN 60068-2-6	5 Hz ≤ f ≤ 9 Hz: 0.35 mm 9 Hz ≤ f ≤ 200 Hz: 1 m/s²

Tab. 37: Operating conditions

7.2.4.2 assignment to DL6B – SI6 and PS6

DL6B is available in the following designs suitable for the individual drive controllers and supply module types:

Type	DL6B10	DL6B11	DL6B12	DL6B20	DL6B21
ID No.	56655	56656	56663	56657	56658
SI6A061	X	—	—	—	—
SI6A062	X	—	—	—	—
SI6A161	—	X	—	—	—
SI6A162	—	X	—	—	—

[8] Only valid for components in original packaging

Type	DL6B10	DL6B11	DL6B12	DL6B20	DL6B21
SI6A261	—	X	—	—	—
SI6A262	—	—	X	—	—
SI6A361	—	—	X	—	—
PS6A24	—	—	—	X	—
PS6A34	—	—	—	—	X

Tab. 38: DL6B assignment to SI6 and PS6

7.2.4.3 Dimensions

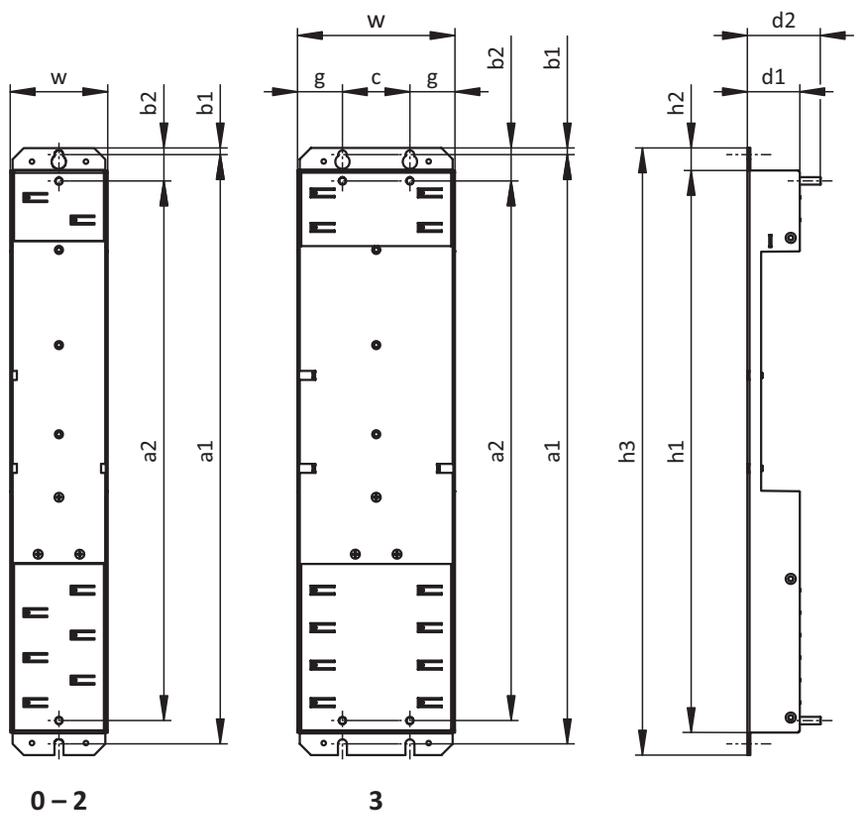

Fig. 4: DL6B dimensional drawing

Dimension			DL6B10 DL6B20	DL6B11 DL6B21	DL6B12
Quick DC-Link	Width	w	45	65	105
	Depth	d1	35		
	Depth incl. attachment bolts	d2	49		
	Height	h1	375		
	Fastening clip height	h2	15		
	Height incl. fastening clips	h3	405		
Fastening holes	Vertical distance (wall mounting)	a1	393+2		
	Vertical distance (module mounting)	a2	360		
	Vertical distance to the upper edge	b1	4.5		
	Vertical distance to the upper edge	b2	22		
	Horizontal spacing of the fastening holes	c	—		45
	Horizontal distance to the side edge	g	—		30

Tab. 39: DL6B dimensions [mm]

7.2.4.4 Weight

Type	Weight without packaging [g]	Weight with packaging [g]
DL6B10	420	460
DL6B11	560	600
DL6B12	920	960
DL6B20	480	520
DL6B21	740	780

Tab. 40: DL6B weight [g]

7.2.5 Minimum clearances

Drive controllers and supply modules

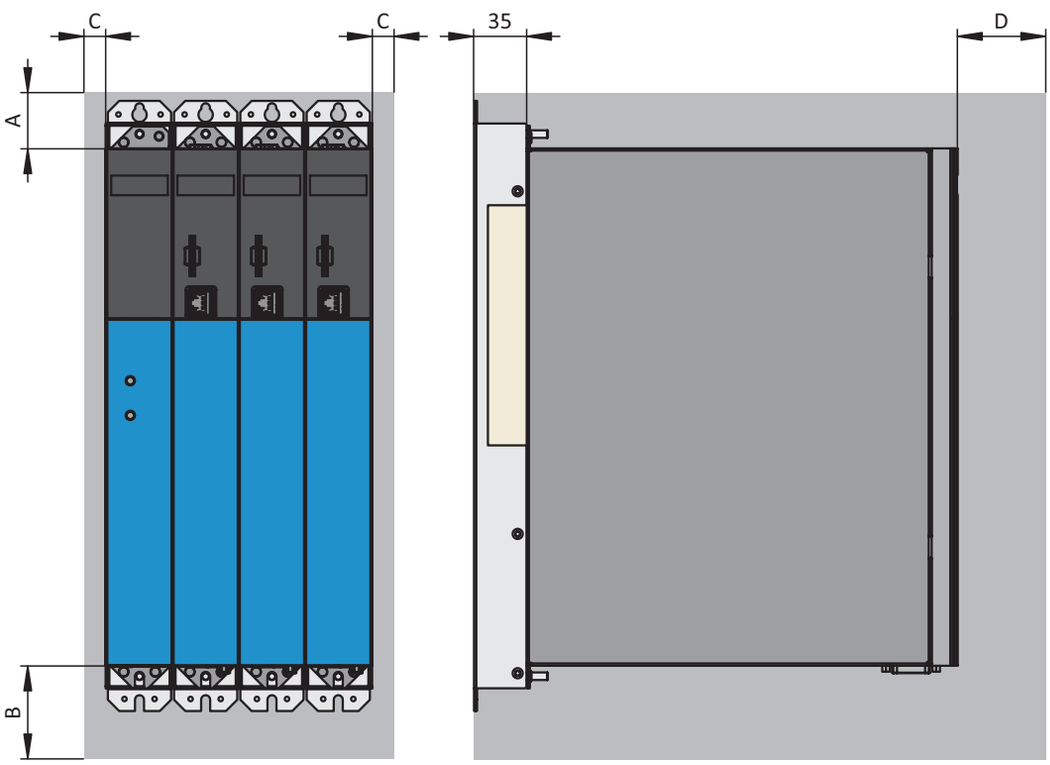

Fig. 5: Minimum clearances

The specified dimensions refer to the outside edges of the drive controller or supply module including the Quick DC-Link rear section module.

Minimum clearance	A (above)	B (below)	C (on the side)	D (in front)
All sizes	100	200	5	50[9]

Tab. 41: Minimum clearances [mm]

Chokes and filters

Avoid installation below drive controllers or supply modules. For installation in a control cabinet, a distance of approximately 100 mm to other neighboring components is recommended. This distance ensures proper heat dissipation for chokes and filters.

Braking resistors

Avoid installation below drive controllers or supply modules. In order for heated air to flow out unimpeded, a minimum clearance of approximately 200 mm must be maintained in relation to neighboring components or walls and approximately 300 mm must be maintained to components above or ceilings.

[9] Minimum clearance to be taken into account for permanent connection of the X9 service interface

7.3 Drive controller/motor combinations

Parameterization of a STOBER drive controller is exceptionally easy, especially together with four-pole STOBER asynchronous motors. The motor is fully typified by inputting just the motor size (e.g. 90L) and its wiring (star or delta). A delta connection (measurement point 230 V, 50 Hz) is available for motors up to 3 kW (size 100). By increasing the voltage at higher frequencies, the full torque can be drawn through the motor up to 87 Hz. It usually makes sense to take this expanded speed adjustment range into account when selecting the gear unit. You can find more detailed information in the chapter [▶ 5.6].

An explanation of the formula symbols used can be found in the chapter [▶ 13.1].

									SI6A061 SI6A062	SI6A161 SI6A162	SI6A261	SI6A262	SI6A361
									$I_{2N,PU}$ [A] ($f_{PWM,PU}$ = 4 kHz)				
	f_T [Hz]	pz	Con-nec-tion	P_N [kW]	n_N [rpm]	M_N [Nm]	M_k/M_N	I_N [A]	5	12	22	25	50
Δ 230 V / Y 400 V motor winding									**$I_{2N,PU}$ / I_N**				
IE3D080L04	50	4	Y	0.75	1445	5.0	3.7	1.7	2.9				
IE3D080L04	87	4	Δ	1.3	2503	5.0	3.7	2.94	1.7				
IE3D090S04	50	4	Y	1.1	1440	7.3	3.7	2.5	2.0				
IE3D090S04	87	4	Δ	1.91	2494	7.3	3.7	4.33	1.2				
IE3D090LX04	50	4	Y	1.5	1445	9.8	4.9	3.4	1.5				
IE3D090LX04	87	4	Δ	2.6	2503	9.8	4.9	5.89		2.0			
IE3D100KX04	50	4	Y	2.2	1450	14.5	3.8	4.55	1.1				
IE3D100KX04	87	4	Δ	3.81	2511	14.5	3.8	7.88		1.5			
IE3D100LX04	50	4	Y	3.0	1450	19.8	4	6.35		1.9			
IE3D100LX04	87	4	Δ	5.2	2511	19.8	4	11		1.1	2.0		
IE3D112M04	50	4	Δ	4.0	1465	26.1	4.5	7.9		1.5			
IE3D132S04	50	4	Δ	5.5	1480	35	5.4	12		1.0	1.8	2.1	
IE3D132M04	50	4	Δ	7.5	1475	49	3.9	14.5			1.5	1.7	
IE3D160M4	50	4	Δ	11	1475	71	3.2	21			1.0	1.2	
IE3D160L04	50	4	Δ	15	1490	96	3.9	28					1.8
IE3D180M04	50	4	Δ	18.5	1475	120	3.0	34.5					1.4
IE3D180L04	50	4	Δ	22	1480	142	3.2	40.5					1.2

7.4 Accessories

You can find information about the available accessories in the following chapters.

7.4.1 Safety technology

Information

Note that the drive controller is delivered as a standard version without safety technology (SZ6 option). If you want a drive controller with integrated safety technology, you must order it together with the drive controller. The safety modules are an integrated part of the drive controllers and must not be modified.

SZ6 option – Without safety technology

ID No. 56660
Standard version.

SR6 safety module – STO using terminals

ID No. 56661
Optional accessory for the use of the Safe Torque Off safety function (STO) in safety-relevant applications (PL e, SIL 3) in accordance with DIN EN ISO 13849-1 and DIN EN 61800-5-2. Connection to higher-level safety circuit through terminal X12 (included in the terminal set scope of delivery).

SY6 safety module – STO and SS1 using FSoE

Safety over EtherCAT

ID No. 56662
Optional accessory for the use of the Safe Torque Off (STO) and Safe Stop 1 (SS1) safety functions in safety-relevant applications (PL e, SIL 3) in accordance with DIN EN ISO 13849-1 and DIN EN 61800-5-2. Connection to the higher-level safety circuit using Fail Safe over EtherCAT (FSoE).

7.4.2 Communication

The drive controller has two interfaces for the fieldbus connection on the top of the device as well as an Ethernet service interface on the front of the device. Cables for the connection are available separately.

EtherCAT or PROFINET fieldbus system

EtherCAT

PROFINET

Please specify the desired fieldbus system when placing your purchase order for the base device.

EtherCAT cables

Ethernet patch cable, CAT5e, yellow.
The following designs are available:
ID No. 49313: Length approx. 0.2 m.
ID No. 49314: Length approx. 0.35 m.

PC connecting cables

ID No. 49857
Cable for connecting the X9 service interface to the PC, CAT5e, blue, 5 m.

USB 2.0 Ethernet adapter

ID No. 49940
Adapter for connecting Ethernet to a USB port.

7.4.3 Terminal set

For the connection, you need suitable terminal sets for each PS6 supply module and each SI6 drive controller.

Terminal set for supply module

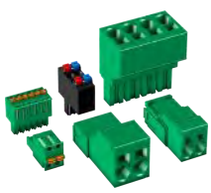

The following designs are available:
ID No. 138660
Terminal set for PS6A24.
ID No. 138661
Terminal set for PS6A34.

Terminal set for drive controllers

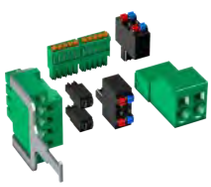

The following designs are available:
ID No. 138655
Terminal set for SI6A061Z/Y.
ID No. 138656
Terminal set for SI6A062Z/Y.
ID No. 138657
Terminal set for SI6A161Z/Y.
ID No. 138658
Terminal set for SI6A162Z/Y.
ID No. 138659
Terminal set for SI6A261Z/Y.
ID No. 138662
Terminal set for SI6A262Z/Y.
ID No. 138663
Terminal set for SI6A361Z/Y.

7.4.4 DC link connection

For the energy supply of the existing networked drive controllers, you need suitable Quick DC-Link modules of type DL6B for each PS6 supply module and each SI6 drive controller.

For the horizontal connection, you receive DL6B rear section modules in various designs, matched to the size of the drive controller or supply module.

The quick fastening clamps for attaching the copper rails and an insulation connection piece are contained in the scope of delivery. The copper rails are not included in the scope of delivery. These must have a cross-section of 5 x 12 mm. Insulation end sections are available separately.

Quick DC-Link DL6B for drive controllers

The following designs are available:
DL6B10
ID No. 56655
Rear section module for drive controllers of size 0:
SI6A061 and SI6A062
DL6B11
ID No. 56656
Rear section module for drive controllers of size 1 or 2 (single-axis controller):
SI6A161, SI6A162 and SI6A261
DL6B12
ID No. 56663
Rear section module for drive controllers of size 2 (double-axis controller) or 3:
SI6A262 and SI6A361

Quick DC-Link DL6B for supply module

The following designs are available:
DL6B20
ID No. 56657
Rear section module for size 2 supply module:
PS6A24
DL6B21
ID No. 56658
Rear section module for size 3 supply module:
PS6A34

Quick DC-Link DL6B insulation end section

ID No. 56659
Insulation end sections for the left and right termination of the group, 2 pcs.

7.4.5 Braking resistor

In addition to the supply modules, STOBER offers braking resistors in the various sizes and performance classes described below. For the selection, note the minimum permitted braking resistors specified in the technical data of the supply modules. In the event of a fault, such as a defective brake chopper, the supply module must be disconnected from the power supply.

7.4.5.1 Braking resistor assignment – PS6

Type	KWADQU	FZZMQU	FGFKQU
ID No.	56634	56635	56636
PS6A24	(—)	(X)	X
PS6A34	(—)	(X)	X

Tab. 42: Braking resistor assignment to PS6 supply module

X	Recommended
(X)	Possible
(—)	Useful under certain conditions

7.4.5.2 KWADQU flat resistor

Properties

Specification	KWADQU 420×91
ID No.	56634
Type	Flat resistor with temperature switch (incl. mounting bracket)
Resistance [Ω]	100
Power [W]	600
Thermal time constant τ_{th} [s]	60
Pulse power for < 1 s [kW]	13
U_{max} [V]	848
Cable design	FEP
Cable length [mm]	500
Conductor cross-section [AWG]	14/19 (1.9 mm²)
Weight [kg]	Approx. 2.6
Protection class	IP54
Test symbols	cULus CE

Tab. 43: KWADQU specification

Specification	Temperature switch
Switching capacity	2 A / 24 V_{DC} (DC11)
Nominal response temperature ϑ_{NAT}	180 °C ± 5 K
Type	NC
Cable design	FEP
Cable length [mm]	500
Conductor cross-section [AWG]	22

Tab. 44: Temperature switch specification

Dimensions

Dimension	KWADQU 420×91
A	420

Tab. 45: KWADQU dimensions [mm]

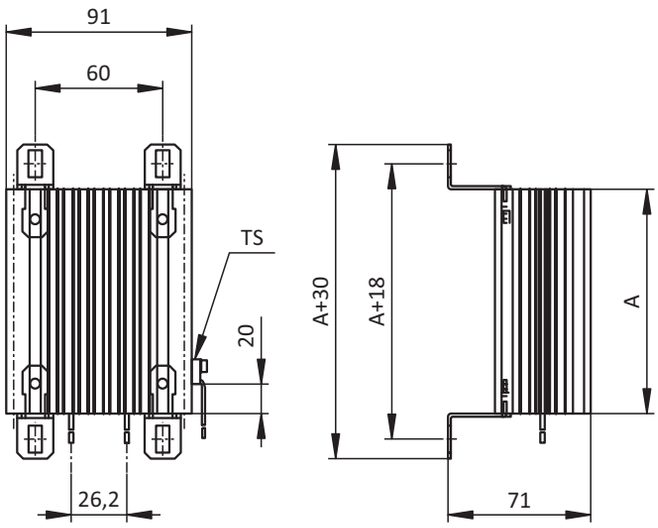

Fig. 6: KWADQU dimensional drawing

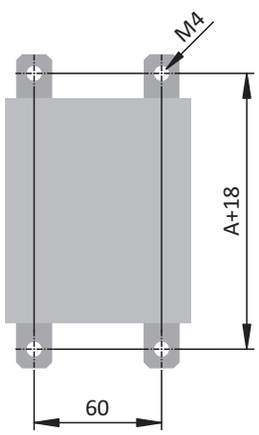

Fig. 7: KWADQU drilling diagram

7.4.5.3 FZZMQU tubular fixed resistor

Properties

Specification	FZZMQU 400×65
ID No.	56635
Type	Tubular fixed resistor with temperature switch
Resistance [Ω]	47
Power [W]	1200
Thermal time constant τ_{th} [s]	40
Pulse power for < 1 s [kW]	36
U_{max} [V]	848
Weight [kg]	Approx. 4.2
Protection class	IP20
Test symbols	c UL us CE

Tab. 46: FZZMQU specification

Specification	Temperature switch
Switching capacity	2 A / 24 V_{DC} (DC11)
Nominal response temperature ϑ_{NAT}	180 °C ± 5 K
Type	NC
Cable design	FEP
Cable length [mm]	500
Conductor cross-section [AWG]	22

Tab. 47: Temperature switch specification

Dimensions

Dimension	FZZMQU 400×65
L × D	400 × 65
H	120
K	6.5 × 12
M	426
O	475
R	185
U	150

Tab. 48: FZZMQU dimensions [mm]

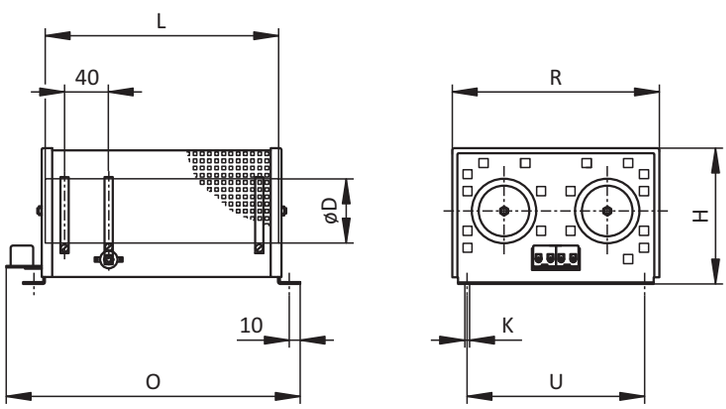

Fig. 8: FZZMQU dimensional drawing

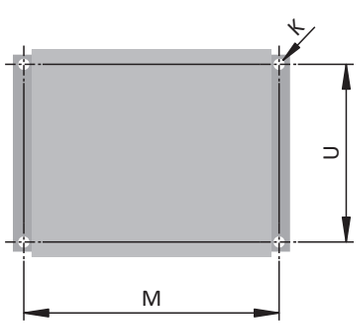

Fig. 9: FZZMQU drilling diagram

7.4.5.4 FGFKQU steel-grid fixed resistor

Properties

Specification	FGFKQU 31005
ID No.	56636
Type	Steel-grid fixed resistor with temperature switch
Resistance [Ω]	22
Power [W]	2500
Thermal time constant τ_{th} [s]	30
Pulse power for < 1 s [kW]	50
U_{max} [V]	848
Weight [kg]	Approx. 7.5
Protection class	IP20
Test symbols	cULus CE

Tab. 49: FGFKQU specification

Specification	Temperature switch
Switching capacity	2 A / 24 V_{DC} (DC11)
Nominal response temperature ϑ_{NAT}	180 °C ± 5 K
Type	NC
Cable design	FEP
Cable length [mm]	500
Conductor cross-section [AWG]	22

Tab. 50: Temperature switch specification

Dimensions

Dimension	FGFKQU 31005
A	270
B	295
C	355

Tab. 51: FGFKQU dimensions [mm]

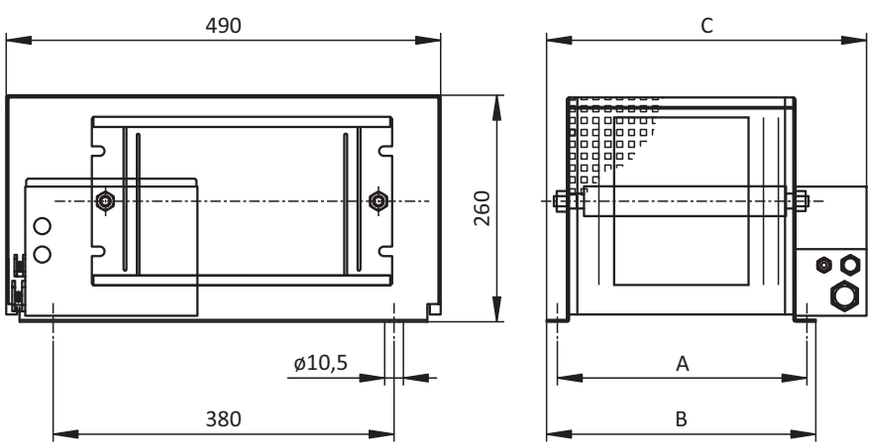

Fig. 10: FGFKQU dimensional drawing

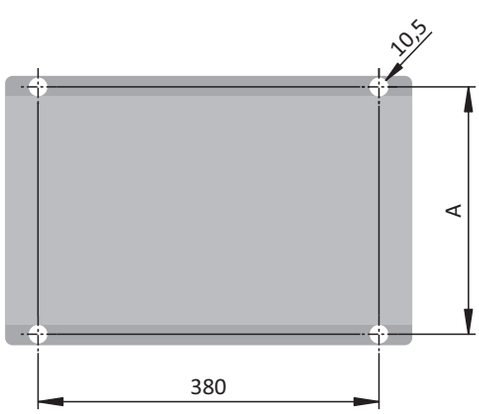

Fig. 11: FGFKQU drilling diagram

7.4.6 Choke

Technical specifications for suitable chokes can be found in the following chapters.

7.4.6.1 TEP power choke

Properties

Specification	TEP4010-2US00
ID No.	56528
Phases	3
Thermally allowed continuous current	100 A
Nominal current $I_{N,MF}$	90 A
Absolute loss P_V	103 W
Inductance	0.14 mH
Voltage range	3 × 400 V_{AC}, +32%/−50% 3 × 480 V_{AC}, +10%/−58%
Voltage drop U_k	2%
Frequency range	50/60 Hz
Protection class	IP00
Max. surrounding temperature $\vartheta_{amb,max}$	40 °C
Insulation class	B
Connection	Screw terminal
Connection type	Flexible with and without end sleeve
Max. conductor cross-section	6 – 35 mm²
Tightening torque	2.5 Nm
Insulation stripping length	17 mm
Installation	Screws
Directive	EN 61558-2-20
UL Recognized Component (CAN; USA)	Yes
Test symbol, symbol	

Tab. 52: TEP specification

Derating – Effect of surrounding temperature

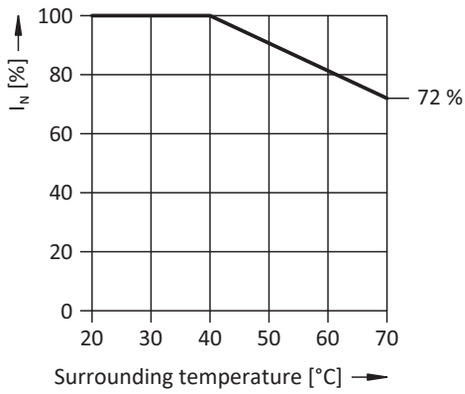

Fig. 12: Derating the nominal current based on surrounding temperature

Derating – Effect of the installation elevation

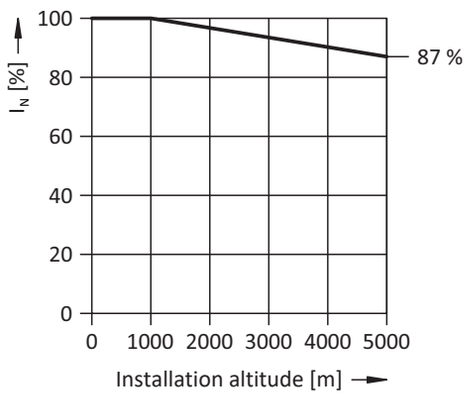

Fig. 13: Derating the nominal current depending on installation elevation

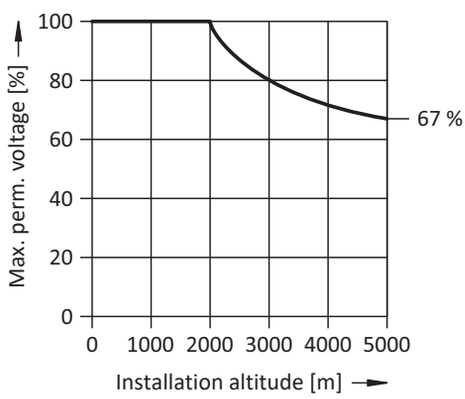

Fig. 14: Derating the voltage depending on installation elevation

Dimensions and weight

Dimensions	TEP4010-2US00
Height [mm]	235
Width [mm]	219
Depth [mm]	118
Vertical distance 1 – fastening holes [mm]	201
Vertical distance 2 – Fastening holes [mm]	136
Horizontal distance 1 – fastening holes [mm]	88
Horizontal distance 2 – Fastening holes [mm]	75
Drill holes – Depth [mm]	7
Drill holes – Width [mm]	12
Screw connection – M	M6
Weight [g]	10000

Tab. 53: TEP dimensions and weight

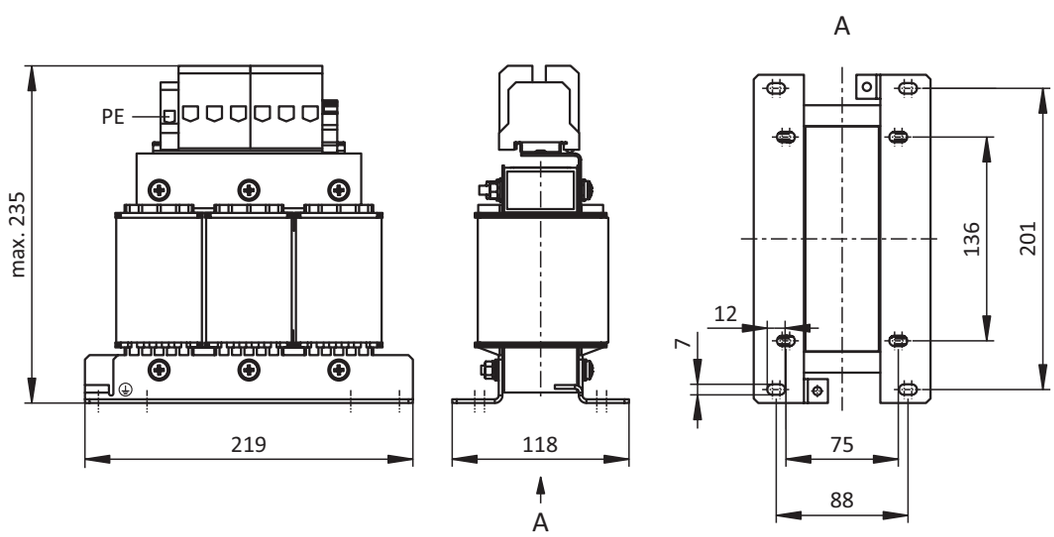

Fig. 15: Power choke dimensional drawing

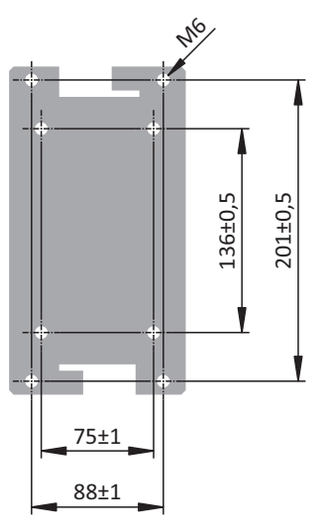

Fig. 16: Power choke drilling diagram

7.4.6.2 TEP output choke

Output chokes are required for connecting drive controllers of size 0 to 2 to synchronous servo motors or asynchronous motors from a cable length > 50 m in order to reduce interference pulses and protect the drive system.

Information

The following technical data only applies to a rotating magnetic field frequency of 200 Hz. For example, this rotating magnetic field frequency is achieved with a motor with 4 pole pairs and a nominal speed of 3000 rpm. Always observe the specified derating for higher rotating magnetic field frequencies. Also observe the relationship with the clock frequency.

Properties

Specification	TEP3720-0ES41	TEP3820-0CS41	TEP4020-0RS41
ID No.	53188	53189	53190
Voltage range	3 × 0 to 480 V_{AC}		
Frequency range	0 – 200 Hz		
Nominal current $I_{N,MF}$ at 4 kHz	4 A	17.5 A	38 A
Nominal current $I_{N,MF}$ at 8 kHz	3.3 A	15.2 A	30.4 A
Max. permitted motor cable length with output choke	100 m		
Max. surrounding temperature $\vartheta_{amb,max}$	40 °C		
Protection class	IP00		
Winding losses	11 W	29 W	61 W
Iron losses	25 W	16 W	33 W
Connection	Screw terminal		
Max. conductor cross-section	10 mm²		
UL Recognized Component (CAN; USA)	Yes		
Test symbols			

Tab. 54: TEP specification

Project configuration

Select the output chokes in accordance with the nominal currents of the output chokes, motor and drive controller. In particular, observe the derating of the output choke for rotating magnetic field frequencies higher than 200 Hz. You can calculate the rotating magnetic field frequency for your drive with the following formula:

$$f_N = n_N \times \frac{p}{60}$$

Derating – Effect of the clock frequency

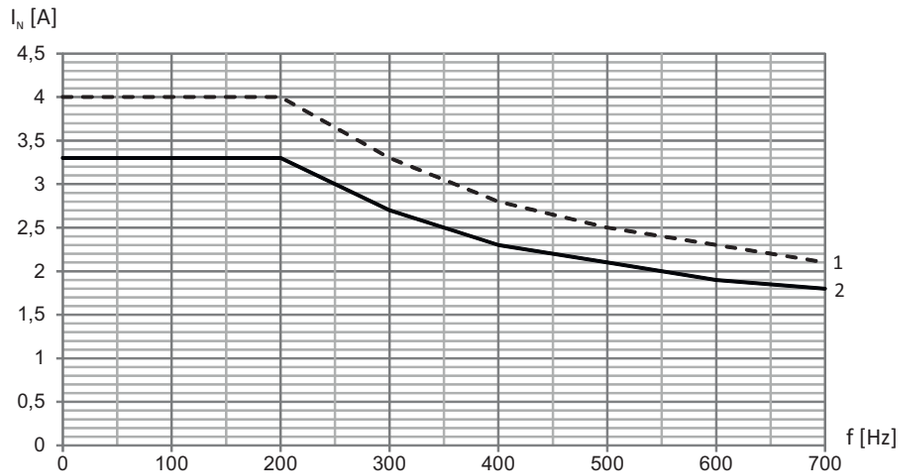

Fig. 17: Derating the nominal current depending on the clock frequency, TEP3720-0ES41

1 4 kHz clock frequency

2 8 kHz clock frequency

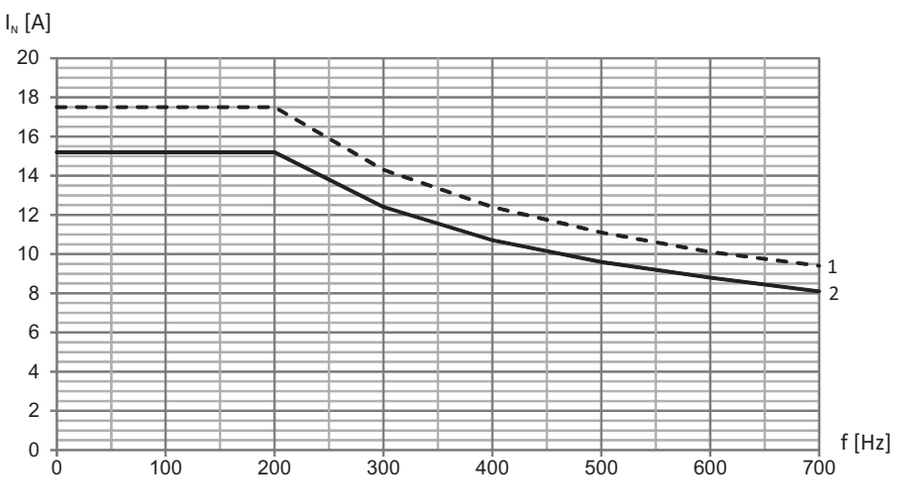

Fig. 18: Derating the nominal current depending on the clock frequency, TEP3820-0CS41

1 4 kHz clock frequency

2 8 kHz clock frequency

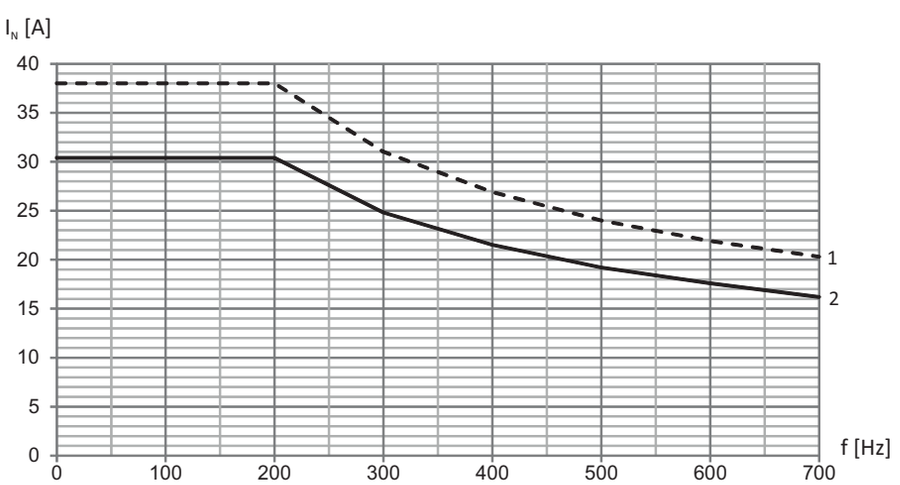

Fig. 19: Derating the nominal current depending on the clock frequency, TEP4020-0RS41

1 4 kHz clock frequency

2 8 kHz clock frequency

Derating – Effect of surrounding temperature

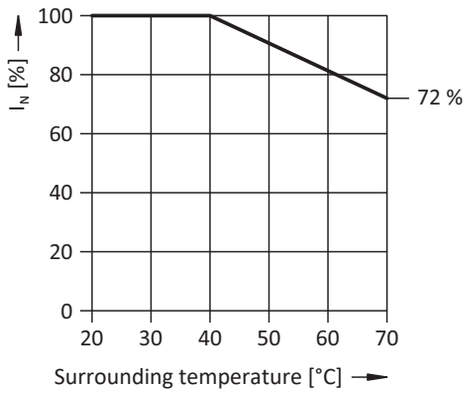

Fig. 20: Derating the nominal current based on surrounding temperature

Derating – Effect of the installation elevation

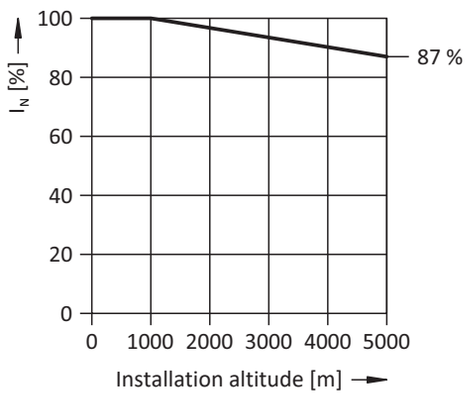

Fig. 21: Derating the nominal current depending on installation elevation

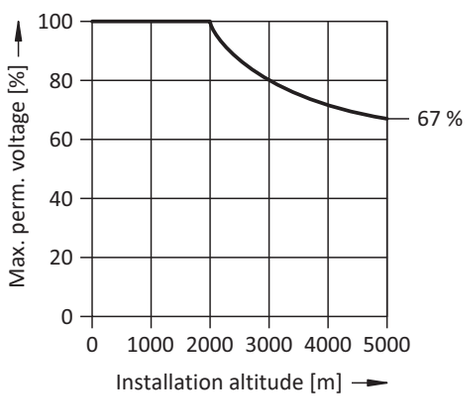

Fig. 22: Derating the voltage depending on installation elevation

Dimensions and weight

Dimension	TEP3720-0ES41	TEP3820-0CS41	TEP4020-0RS41
Height h [mm]	Max. 153	Max. 153	Max. 180
Width w [mm]	178	178	219
Depth d [mm]	73	88	119
Vertical distance – Fastening holes a1 [mm]	166	166	201
Vertical distance – Fastening holes a2 [mm]	113	113	136
Horizontal distance – Fastening holes b1 [mm]	53	68	89
Horizontal distance – Fastening holes b2 [mm]	49	64	76
Drill holes – Depth e [mm]	5.8	5.8	7
Drill holes – Width f [mm]	11	11	13
Screw connection – M	M5	M5	M6
Weight [g]	2900	5900	8800

Tab. 55: TEP dimensions and weight

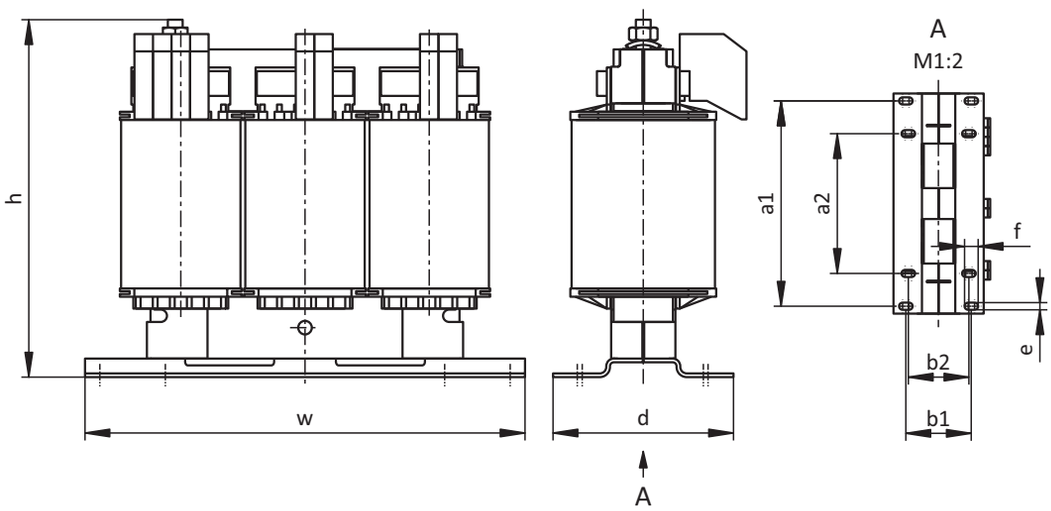

Fig. 23: TEP dimensional drawing

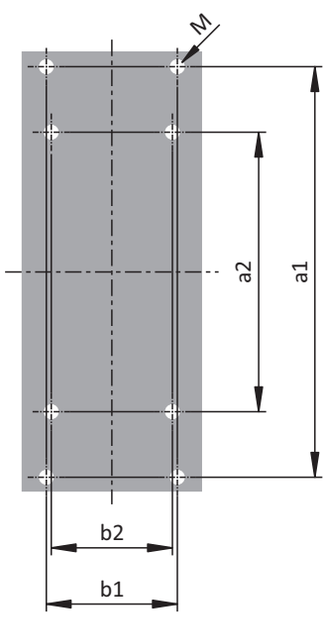

Fig. 24: TEP drilling diagram

7.4.7 HTL-to-TTL adapter

HT6 HTL-to-TTL adapter

ID No. 56665
Adapters for SC6 and SI6 series drive controllers for level conversion from HTL signals to TTL signals.
It is used to connect an HTL differential incremental encoder to terminal X4 of the drive controller.

7.5 Further information

7.5.1 Directives and standards

The following European directives and standards are relevant for drive controllers:

- Machinery Directive 2006/42/EC
- Low Voltage Directive 2014/35/EU
- EMC Directive 2014/30/EU
- EN 61326-3-1:2008
- EN 61800-3:2004 and A1:2012
- EN 61800-5-1:2007
- EN 61800-5-2:2007
- EN 50178:1997
- IEC 61784-3:2010

7.5.2 Symbols, marks and test symbols

Grounding symbol
Grounding symbol in accordance with IEC 60417, symbol 5019.

RoHS lead-free mark
Marking in accordance with RoHS directive 2011-65-EU.

CE mark
Manufacturer's self declaration: The product meets the requirements of EU directives.

UL test symbol
This product is listed by UL for the United States and Canada.
Representative samples of this product have been evaluated by UL and meet the requirements of applicable standards.

UL recognized component mark
This component or material is recognized by UL. Representative samples of this product have been evaluated by UL and meet applicable requirements.

7.5.3 Additional documentation

Additional documentation related to the product can be found at http://www.stoeber.de/en/downloads/

Enter the ID of the documentation in the Search... field.

Documentation	ID
Manual for SI6 drive controllers	442728

8 SD6 Drive controllers

Table of contents

8.1 Overview ... 272

8.1.1 Features ... 273

8.1.2 Software components ... 275

8.1.3 Application training ... 275

8.2 Technical data ... 276

8.2.1 Type designation ... 276

8.2.2 Sizes ... 276

8.2.3 General technical data ... 277

8.2.4 Electrical data ... 277

8.2.5 Derating ... 282

8.2.6 Dimensions ... 284

8.2.7 Minimum clearances ... 286

8.3 Drive controller/motor combinations ... 287

8.4 Accessories ... 288

8.4.1 Safety technology ... 288

8.4.2 Communication ... 288

8.4.3 Terminal module ... 290

8.4.4 DC link connection ... 292

8.4.5 Braking resistor ... 293

8.4.6 Choke ... 300

8.4.7 EMC shroud ... 307

8.4.8 Removable data storage ... 307

8.5 Further information ... 308

8.5.1 Directives and standards ... 308

8.5.2 Symbols, marks and test symbols ... 308

8.5.3 Additional documentation ... 308

8 Drive controllers SD6

8.1 Overview

High performance and flexibility

Features

- Nominal output current up to 85 A
- 250% overload capacity
- Control of linear and rotary synchronous servo motors and asynchronous motors
- Multi-functional encoder interfaces
- Automatic motor parameterization from the electronic motor nameplate
- Isochronic system bus (IGB motion bus) for parameterization and multi-axis applications
- Communication over CANopen, EtherCAT or PROFINET
- Safe Torque Off (STO) in the standard version, expanded safety technology (SIL 3, PL e, Cat. 4) as an option
- Digital and analog inputs and outputs as an option
- Brake chopper, brake control and line filter
- Energy supply through direct power supply
- Flexible DC link connection for multi-axis applications
- Convenient operating unit consisting of graphical display and keys
- Paramodul removable data storage for quick commissioning and service

8.1.1 Features

The SD6 drive controller from the the 6th STOBER drive controller generation offers maximum precision and productivity for automation technology and mechanical engineering despite ever more complex functions. Highly dynamic drives ensure the shortest recovery times from fast changes in set value and load jumps. There is also an option of connecting the drive controllers in a DC intermediate circuit for multi-axis applications, which improves the energy footprint of the entire system. The SD6 drive controller is available in four sizes with a nominal output current of up to 85 A.

The optimized vector control, sensorless vector control, U/f slip-compensated and U/f controller control types are available for use with asynchronous motors.

SD6 drive controller

Fully electronic STO as a standard feature

There is already a wear-free, fully electronic interface for the Safe Torque Off (STO) safety function available in the standard series version. The solution is a technical innovation that works without any system tests disrupting operation. In practical terms, this means an impressive increase in the availability of machines and systems. Time-consuming planning and documentation of tests are also eliminated. In multi-axis applications with SD6 drive controllers, the STO safety function can simply be looped through. The safety-relevant functions were developed together with Pilz GmbH & Co. KG.

Expanded safety option

In addition to the safe stop functions Safe Stop 1 (SS1) and Safe Stop 2 (SS2), additional safety functions such as Safely-Limited Speed (SLS), Safe Brake Control (SBC), Safe Brake Test (SBT), Safe Direction (SDI) and Safely-Limited Increment (SLI) are also available.

Certified safety

TÜV certification makes it possible to use SD6 drive controllers even in applications with challenging safety requirements:

- SIL 3, HFT 1 in accordance with EN 61800-5-2
- PL e, category 4 in accordance with DIN EN ISO 13849

Quick DC-Link

All the product types of the SD6 drive controller have the option of a DC link connection. This technology makes it possible for the regenerative production of energy from one drive to be used as motor energy by another drive. The Quick DC-Link rear structure element has been developed to set up a reliable and efficient rail connection to the DC link connection. This optionally available accessory connects the DC links of the individual drive controllers by means of copper rails that can carry a load of up to 200 A. The rails can be attached without any tools using quick fastening clamps.

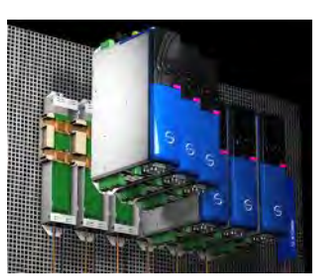

Paramodul removable data storage

Removable data storage with integrated microSD card is available for fast series commissioning by copying and for easy service when replacing devices. It represents the ideal medium for saving additional project data and documentation and can be used for direct editing on a PC.

Integrated bus (IGB)

SD6 drive controllers have two interfaces for the integrated bus in the standard version. The integrated bus is used for easy configuration over Ethernet and isochronic data exchange for the following functions:

- Multi-axis synchronization between the drive controllers (IGB motion bus)
- Direct connection for remote maintenance of individual and multiple drive controllers
- Direct connection between one or more drive controllers and a PC

Interface for the Integrated Bus

IGB motion bus

The IGB motion bus allows for cyclic, isochronic data exchange between multiple SD6 drive controllers integrated into the IGB network. In addition to transferring guide values for master/slave operation, it is possible to exchange any other data as well.

STOBER remote maintenance concept

STOBER remote maintenance enables commissioning software to be used to perform all processes and sequences just like an on-site service visit. The concept guides users through a controlled and protected procedure. It ensures that the person responsible for the machine is there on site to pay attention to special situations and personal safety. On the other end, the remote maintenance specialist has the assurance of communicating with a responsible employee on site who is monitoring the situation on the machine.

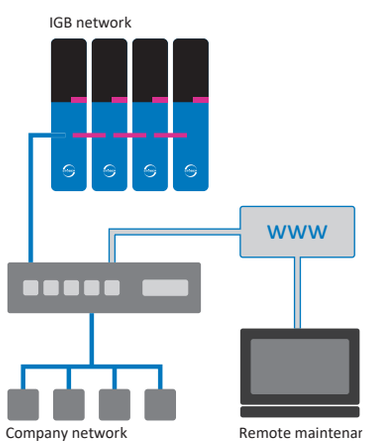

Remote maintenance enables all processes and sequences to be performed just like an on-site service visit.

Brake management

The SD6 drive controller can activate a 24 V_{DC} brake using an integrated brake control. Brake management provides two functions for the brake system:

- Cyclic brake test
- Bed in brake

8.1.2 Software components

Project configuration and commissioning

The 6th generation of DriveControlSuite project configuration and commissioning software has all the functions for the efficient use of drive controllers in single-axis and multi-axis applications. The program guides you step by step through the complete project configuration and parameterization process using wizards.

Open communication

Device communication is possible using EtherCAT, CANopen or PROFINET.

Applications

Drive-based motion control is recommended for the decentralized motion control of sophisticated machines.

The drive-based application package from STOBER is the right choice wherever universal and flexible solutions are needed. The Drive Based Synchronous application provides drive-based motion control for synchronous run, positioning, velocity and torque/force with the PLCopen Motion Control command set. These standard commands have been combined into operating modes for different application cases and supplemented with additional functions such as motion block linking or cams. For the command operating mode, all properties of the movements are specified directly by the controller. The properties of the movements in the drive are predefined in the motion block operating mode so that only a start signal is necessary to perform the movement. Linking can be used to define complete motion sequences.

In addition, the CiA 402 application is also available, which includes both the controller-based and drive-based operating modes (csp, csv, cst, ip, pp, pv, pt).

8.1.3 Application training

STOBER offers a multi-level training program that focuses essentially on application programming of the motion controller and drive controller.

G6 Basic

Training content: System overview, installation and commissioning of the drive controller. Use of option modules. Parameterization, commissioning and diagnostics using the commissioning software. Remote maintenance. Basics of controller optimization. Configuration of the drive train. Integrated software functions. Software applications. Connection to a higher-level controller. Basics of safety technology. Practical exercises on training topics.

Software used: DriveControlSuite.

G6 Advanced

Training content: Special knowledge for regulating, control and safety technology. Practical exercises on training topics.

8.2 Technical data

Technical data for the drive controller can be found in the following chapters.

8.2.1 Type designation

SD	6	A	0	6	T	E	X

Tab. 1: Example code for type designation

Code	Designation	Design
SD	Series	ServoDrive
6	Generation	Generation 6
A, B	Version	
0 – 3	Size	
6 (0 – 9)	Power output stage	Power output stage within the size
T	Safety module	ST6: STO via terminals
E		SE6: Expanded safety functionality using terminals
N	Communication module	Empty
E		EC6: EtherCAT
C		CA6: CANopen
P		PN6: PROFINET
N	Terminal module	Empty
X		XI6: Extended I/O
R		RI6: Resolver I/O
I		IO6: Standard I/O

Tab. 2: Meaning of the example code

8.2.2 Sizes

Type	Size
SD6A02	Size 0
SD6A04	Size 0
SD6A06	Size 0
SD6A14	Size 1
SD6A16	Size 1
SD6A24	Size 2
SD6A26	Size 2
SD6A34	Size 3
SD6A36	Size 3
SD6A38	Size 3

Tab. 3: Available SD6 types and sizes

SD6 in sizes 0, 1, 2 and 3

8.2.3 General technical data

The following information applies to all device types.

Device features	
Protection class of the device	IP20
Protection class of the installation space	At least IP54
Radio interference suppression	Integrated line filter in accordance with EN 61800-3:2012, interference emission class C3
Overvoltage category	III in accordance with EN 61800-5-1:2008
Test symbols	

Tab. 4: Device features

Transport and storage conditions	
Storage/ transport temperature	−20 °C to +70 °C Maximum change: 20 K/h
Relative humidity	Maximum relative humidity 85%, non-condensing
Vibration (transport) in accordance with DIN EN 60068-2-6	5 Hz ≤ f ≤ 9 Hz: 3.5 mm 9 Hz ≤ f ≤ 200 Hz: 10 m/s² 200 Hz ≤ f ≤ 500 Hz: 15 m/s²
Fall height for freefall[1] Weight < 100 kg in accordance with DIN EN 61800-2 (or DIN EN 60721-3-2:1997, class 2M1)	0.25 m

Tab. 5: Transport and storage conditions

Operating conditions	
Surrounding temperature during operation	0 °C to 45 °C with nominal data 45 °C to 55 °C with derating −2.5% / K
Relative humidity	Maximum relative humidity 85%, non-condensing
Installation altitude	0 m to 1000 m above sea level without restrictions 1000 m to 2000 m above sea level with −1.5%/100 m derating
Pollution degree	Pollution degree 2 in accordance with EN 50178
Ventilation	Installed fan
Vibration (operation) in accordance with DIN EN 60068-2-6	5 Hz ≤ f ≤ 9 Hz: 0.35 mm 9 Hz ≤ f ≤ 200 Hz: 1 m/s²

Tab. 6: Operating conditions

Discharge times	
Self-discharge of DC link	5 min

Tab. 7: Discharge times of the DC link circuit

8.2.4 Electrical data

The electrical data of the available SD6 sizes as well as the properties of the brake chopper can be found in the following sections.

Information

For the time span between two energizing processes, note that:

a) Direct, repeat activation of the supply voltage is possible for power-on/power-off operation.

b) A time span of > 15 must be observed between two energizing processes during continuous, cyclical power-on/power-off operation with increased charging capacity.

[1] Only valid for components in original packaging

Information

The STO safety function is available for safe stopping as an alternative to continuous, cyclical power-on/power-off operation.

An explanation of the formula symbols used can be found in the chapter [▷ 13.1].

8.2.4.1 Control unit

Electrical data	All types
U_{1CU}	24 V_{DC}, +20%/–15%
I_{1maxCU}	1.5 A

Tab. 8: Control unit electrical data

8.2.4.2 Power unit: Size 0

Electrical data	SD6A02	SD6A04	SD6A06
U_{1PU}	1 × 230 V_{AC}, +20% / −40%, 50/60 Hz	3 × 400 V_{AC}, +32% / −50%, 50/60 Hz; 3 × 480 V_{AC}, +10% / −58%, 50/60 Hz	
f_{2PU}	0 – 700 Hz		
U_{2PU}	0 – max. U_{1PU}		
C_{PU}	340 µF	135 µF	135 µF
C_{maxPU}	1620 µF	540 µF	540 µF

Tab. 9: SD6 electrical data, size 0

Nominal currents up to +45 °C (in the control cabinet)

Electrical data	SD6A02	SD6A04	SD6A06
$f_{PWM,PU}$	4 kHz		
$I_{1N,PU}$	8.3 A	2.8 A	5.4 A
$I_{2N,PU}$	4 A	2.3 A	4.5 A
I_{2maxPU}	180% for 5 s; 150% for 30 s		

Tab. 10: SD6 electrical data, size 0, for 4 kHz clock frequency

Electrical data	SD6A02	SD6A04	SD6A06
$f_{PWM,PU}$	8 kHz		
$I_{1N,PU}$	6 A	2.2 A	4 A
$I_{2N,PU}$	3 A	1.7 A	3.4 A
I_{2maxPU}	250% for 2 s; 200% for 5 s		

Tab. 11: SD6 electrical data, size 0, for 8 kHz clock frequency

Electrical data	SD6A02	SD6A04	SD6A06
U_{onCH}	400 – 420 V_{DC}	780 – 800 V_{DC}	
U_{offCH}	360 – 380 V_{DC}	740 – 760 V_{DC}	
R_{2minRB}	100 Ω		
P_{maxRB}	1.8 kW	6.4 kW	
P_{effRB}	1.0 kW	2.9 kW	

Tab. 12: Brake chopper electrical data, size 0

8.2.4.3 Power unit: Size 1

Electrical data	SD6A14	SD6A16
U_{1PU}	3 × 400 V_{AC}, +32% / −50%, 50/60 Hz; 3 × 480 V_{AC}, +10% / −58%, 50/60 Hz	
f_{2PU}	0 – 700 Hz	
U_{2PU}	0 – max. U_{1PU}	
C_{PU}	470 µF	560 µF
C_{maxPU}	1400 µF	1400 µF

Tab. 13: SD6 electrical data, size 1

Nominal currents up to +45 °C (in the control cabinet)

Electrical data	SD6A14	SD6A16
$f_{PWM,PU}$	4 kHz	
$I_{1N,PU}$	12 A	19.2 A
$I_{2N,PU}$	10 A	16 A
I_{2maxPU}	180% for 5 s; 150% for 30 s	

Tab. 14: SD6 electrical data, size 1, for 4 kHz clock frequency

Electrical data	SD6A14	SD6A16
$f_{PWM,PU}$	8 kHz	
$I_{1N,PU}$	9.3 A	15.8 A
$I_{2N,PU}$	6 A	10 A
I_{2maxPU}	250% for 2 s; 200% for 5 s	

Tab. 15: SD6 electrical data, size 1, for 8 kHz clock frequency

Electrical data	SD6A14	SD6A16
U_{onCH}	780 – 800 V_{DC}	
U_{offCH}	740 – 760 V_{DC}	
R_{2minRB}	47 Ω	
P_{maxRB}	13.6 kW	
P_{effRB}	6.2 kW	

Tab. 16: Brake chopper electrical data, size 1

8.2.4.4 Power unit: Size 2

Electrical data	SD6A24	SD6A26
U_{1PU}	3 × 400 V_{AC}, +32% / −50%, 50/60 Hz; 3 × 480 V_{AC}, +10% / −58%, 50/60 Hz	
f_{2PU}	0 – 700 Hz	
U_{2PU}	0 – max. U_{1PU}	
C_{PU}	680 µF	1000 µF
C_{maxPU}	1400 µF	1400 µF

Tab. 17: SD6 electrical data, size 2

Nominal currents up to +45 °C (in the control cabinet)

Electrical data	SD6A24	SD6A26
$f_{PWM,PU}$	4 kHz	
$I_{1N,PU}$	26.4 A	38.4 A
$I_{2N,PU}$	22 A	32 A
I_{2maxPU}	180% for 5 s; 150% for 30 s	

Tab. 18: SD6 electrical data, size 2, for 4 kHz clock frequency

Electrical data	SD6A24	SD6A26
$f_{PWM,PU}$	8 kHz	
$I_{1N,PU}$	24.5 A	32.6 A
$I_{2N,PU}$	14 A	20 A
I_{2maxPU}	250% for 2 s; 200% for 5 s	

Tab. 19: SD6 electrical data, size 2, for 8 kHz clock frequency

Electrical data	SD6A24	SD6A26
U_{onCH}	780 – 800 V_{DC}	
U_{offCH}	740 – 760 V_{DC}	
R_{2minRB}	22 Ω	
P_{maxRB}	29.1 kW	
P_{effRB}	13.2 kW	

Tab. 20: Brake chopper electrical data, size 2

8.2.4.5 Power unit: Size 3

Electrical data	SD6A34	SD6A36	SD6A38
U_{1PU}	3 × 400 V_{AC}, +32% / −50%, 50/60 Hz; 3 × 480 V_{AC}, +10% / −58%, 50/60 Hz		
f_{2PU}	0 – 700 Hz		
U_{2PU}	0 – max. U_{1PU}		
C_{PU}	430 µF	900 µF	900 µF
C_{maxPU}	5100 µF	5100 µF	5100 µF

Tab. 21: SD6 electrical data, size 3

Nominal currents up to +45 °C (in the control cabinet)

Electrical data	SD6A34	SD6A36	SD6A38
$f_{PWM,PU}$	4 kHz		
$I_{1N,PU}$	45.3 A	76 A	76 A
$I_{2N,PU}$	44 A	70 A	85 A[2]
I_{2maxPU}	180% for 5 s; 150% for 30 s		

Tab. 22: SD6 electrical data, size 3, for 4 kHz clock frequency

Electrical data	SD6A34	SD6A36	SD6A38
$f_{PWM,PU}$	8 kHz		
$I_{1N,PU}$	37 A	62 A	76 A
$I_{2N,PU}$	30 A	50 A	60 A
I_{2maxPU}	250% for 2 s; 200% for 5 s		

Tab. 23: SD6 electrical data, size 3, for 8 kHz clock frequency

Electrical data	SD6A34	SD6A36	SD6A38
U_{onCH}	780 – 800 V_{DC}		
U_{offCH}	740 – 760 V_{DC}		
R_{intRB}	30 Ω (PTC resistance; 100 W; max. 1 kW for 1 s; τ = 40 s)		
R_{2minRB}	15 Ω		
P_{maxRB}	42 kW		
P_{effRB}	19.4 kW		

Tab. 24: Brake chopper electrical data, size 3

[2] Specification applies to the default setting of the field weakening voltage limit: B92 = 80%.

8.2.4.6 Power loss data in accordance with EN 61800-9-2

Type	Nominal current $I_{2N,PU}$	Apparent power	Absolute losses $P_{V,CU}$[3]	Operating points[4]								IE class[5]	Comparison[6]
				(0/25)	(0/50)	(0/100)	(50/25)	(50/50)	(50/100)	(90/50)	(90/100)		
				Relative losses									
	[A]	[kVA]	[W]	[%]									
SD6A02	4	0.9	10	5.01	5.07	5.68	5.20	5.37	6.30	5.88	7.43	IE2	
SD6A04	2.3	1.6	10	2.98	3.13	3.49	3.02	3.22	3.71	3.36	4.09	IE2	
SD6A06	4.5	3.1	12	1.71	1.86	2.24	1.75	1.97	2.51	2.16	3.04	IE2	
SD6A14	10	6.9	12	1.38	1.54	1.93	1.43	1.64	2.17	1.80	2.57	IE2	
SD6A16	16	11.1	12	0.95	1.12	1.66	0.99	1.23	1.98	1.41	2.52	IE2	
SD6A24	22	15.2	15	0.80	0.97	1.49	0.84	1.06	1.75	1.21	2.19	IE2	
SD6A26	32	22.2	15	0.70	0.87	1.40	0.74	0.97	1.67	1.11	2.10	IE2	
SD6A34	44	30.5	35	0.61	0.76	1.21	0.68	0.90	1.53	1.06	1.96	IE2	
SD6A36	70	48.5	35	0.53	0.69	1.18	0.59	0.82	1.49	0.97	1.89	IE2	
SD6A38	85	58.9	35	0.47	0.64	1.18	0.54	0.78	1.50	0.94	1.94	IE2	
				Absolute losses P_V									
	[A]	[kVA]	[W]	[W]									[%]
SD6A02	4	0.9	10	45.1	45.6	51.1	46.8	48.3	56.7	52.9	66.9	IE2	51.8
SD6A04	2.3	1.6	10	47.7	50.1	55.8	48.3	51.5	59.3	53.8	65.4	IE2	40.2
SD6A06	4.5	3.1	12	52.9	57.6	69.3	54.4	61.0	77.9	67.1	94.1	IE2	39.6
SD6A14	10	6.9	12	95.3	106.1	133.3	98.6	113.2	149.9	123.9	177.0	IE2	37.1
SD6A16	16	11.1	12	104.9	124.0	184.6	110.3	136.6	219.8	156.0	279.8	IE2	35.8
SD6A24	22	15.2	15	121.5	146.9	226.1	128.1	161.6	266.0	183.7	332.7	IE2	32.9
SD6A26	32	22.2	15	154.7	192.8	311.3	164.7	214.9	370.5	246.9	465.9	IE2	38.6
SD6A34	44	30.5	35	187.5	232.2	368.7	207.7	273.9	466.8	323.0	597.8	IE2	32.1
SD6A36	70	48.5	35	256.6	332.3	570.8	287.9	397.0	721.5	471.0	915.9	IE2	33.9
SD6A38	85	58.9	35	277.8	376.9	692.3	317.4	459.0	886.1	554.6	1143.1	IE2	35.3

Tab. 25: Power loss data of the SD6 drive controller in accordance with EN 61800-9-2

General conditions

The loss data applies to drive controllers without accessories.

The power loss calculation is based on a three-phase supply voltage with 400 V_{AC}/50 Hz.

The calculated data includes a supplement of 10% in accordance with EN 61800-9-2.

The power loss specifications refer to a clock frequency of 4 kHz.

The absolute losses for a power unit that is switched off refer to the 24 V_{DC} power supply of the control electronics.

[3] Absolute losses for a power unit that is switched off

[4] Operating points for relative motor stator frequency in % and relative torque current in %

[5] IE class in accordance with EN 61800-9-2

[6] Comparison of the losses for the reference related to IE2 in the nominal point (90, 100)

8.2.4.7 Power loss data of accessories

If you intend to order the drive controller with accessory parts, losses increase as follows:

Type	Absolute losses P_V [W]
SE6 safety module	< 4
ST6 safety module	1
IO6 terminal module	< 2
XI6 terminal module	< 5
RI6 terminal module	< 5
CA6 communication module	1
EC6 communication module	< 2
PN6 communication module	< 4

Tab. 26: Absolute losses in the accessories

Information

Note the absolute power loss of the encoder (usually < 3 W) and of the brake when designing as well.

Loss specifications for other optional accessories can be found in the technical data of the respective accessory part.

8.2.5 Derating

When dimensioning the drive controller, observe the derating of the nominal output current as a function of the clock frequency, surrounding temperature and installation altitude. There is no restriction for a surrounding temperature from 0 °C to 45 °C and an installation altitude of 0 m to 1000 m. The details given below apply to values outside these ranges.

8.2.5.1 Effect of the clock frequency

Changing the clock frequency f_{PWM} affects the amount of noise produced by the drive, among other things. However, increasing the clock frequency results in increased losses. During project configuration, define the highest clock frequency and use it to determine the nominal output current $I_{2N,PU}$ for dimensioning the drive controller.

Type	$I_{2N,PU}$ 4 kHz	$I_{2N,PU}$ 8 kHz	$I_{2N,PU}$ 16 kHz
SD6A02	4 A	3 A	2 A
SD6A04	2.3 A	1.7 A	1.1 A
SD6A06	4.5 A	3.4 A	2.3 A
SD6A14	10 A	6 A	4 A
SD6A16	16 A	10 A	5.7 A
SD6A24	22 A	14 A	8.1 A
SD6A26	32 A	20 A	12 A
SD6A34	44 A	30 A	18 A
SD6A36	70 A	50 A	31 A
SD6A38	85 A[7]	60 A	37.8 A

Tab. 27: Nominal output current $I_{2N,PU}$ dependent on the clock frequency

[7] Specification applies to the default setting of the field weakening voltage limit: B92 = 80 %.

8.2.5.2 Effect of the installation altitude

Derating as a function of the installation altitude is determined as follows:

- 0 m to 1000 m: No restriction (D_{IA} = 100%)
- 1000 m to 2000 m: Derating −1.5%/100 m

Example

The drive controller needs to be installed at an altitude of 1500 m above sea level.

The derating factor D_{IA} is calculated as follows:
D_{IA} = 100% − 5 × 1.5% = 92.5%

8.2.5.3 Effect of the surrounding temperature

Derating as a function of the surrounding temperature is determined as follows:

- 0 °C to 45 °C: No restrictions (D_T = 100%)
- 45 °C to 55 °C: Derating −2.5%/K

Example

The drive controller needs to be operated at 50 °C.

The derating factor D_T is calculated as follows
D_T= 100% − 5 × 2.5% = 87.5%

8.2.5.4 Calculating the derating

Follow these steps for the calculation:

1. Determine the highest clock frequency (f_{PWM}) that will be used during operation and use it to determine the nominal current $I_{2N,PU}$.
2. Determine the derating factors for installation altitude and surrounding temperature.
3. Calculate the reduced nominal current $I_{2N,PU(red)}$ in accordance with the following formula:
   $I_{2N,PU(red)} = I_{2N,PU} \times D_T \times D_{IA}$

Example

A drive controller of type SD6A06 needs to be operated at a clock frequency of 8 kHz at an altitude of 1500 m above sea level and a surrounding temperature of 50 °C.

The nominal current of the SD6A06 at 8 kHz is 3.4 A. The derating factor D_T is calculated as follows:
D_T = 100% − 5 × 2.5% = 87.5%

The derating factor D_{IA} is calculated as follows:
D_{IA} = 100% − 5 × 1.5% = 92.5%

The output current of importance for projecting is:
$I_{2N,PU(red)}$ = 3.4 A × 0.875 × 0.925 = 2.75 A

8.2.6 Dimensions

The dimensions of the available SD6 sizes can be found in the following sections.

8.2.6.1 Dimensions: sizes 0 to 2

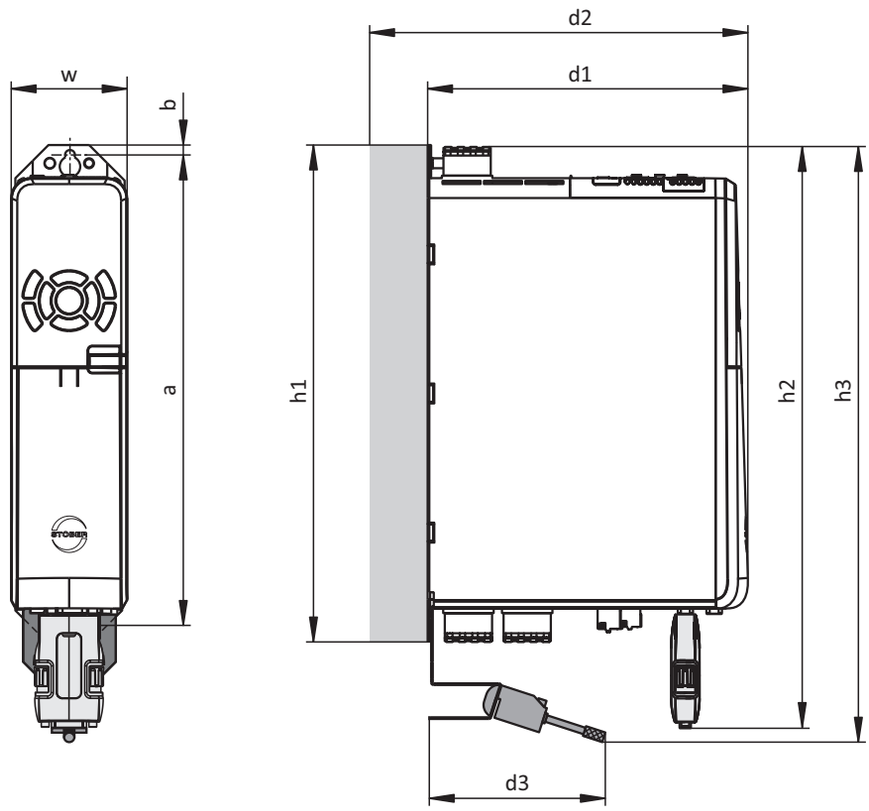

Fig. 1: SD6 dimensional drawing, sizes 0 to 2

Dimension			Size 0	Size 1	Size 2
Drive controller	Width	w	70	70	105
	Depth	d1	194	284	
	Depth incl. RB 5000 braking resistor	d2	212	302	
	Depth incl. Quick DC-Link	d2	229	319	
	Height incl. fastening clips	h1	300		
	Height incl. AES	h2	367		
	Height incl. EMC shroud	h3	approx. 376		
EMC shroud incl. shield connection terminal	Depth	d3	approx. 111		
Fastening holes	Vertical distance	a	283+2		
	Vertical distance to the upper edge	b	6		

Tab. 28: SD6 dimensions, sizes 0 to 2 [mm]

8.2.6.2 Dimensions: size 3

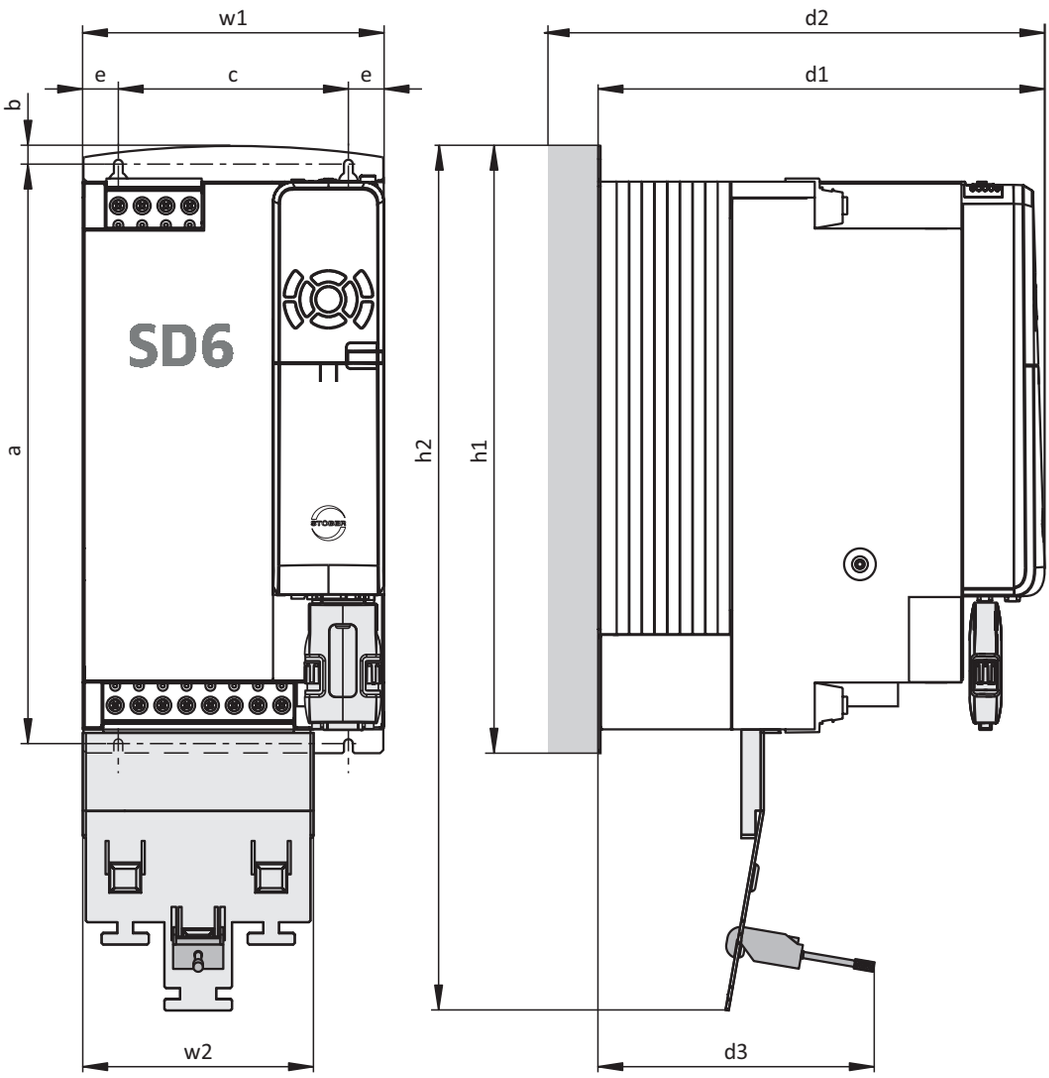

Fig. 2: SD6 dimensional drawing, size 3

Dimension			Size 3
Drive controller	Width	w1	194
	Depth	d1	305
	Depth incl. Quick DC-Link	d2	340
	Height incl. fastening clips	h1	382.5
	Height incl. EMC shroud	h2	540
EMC shroud incl. shield connection terminal	Width	w2	147
	Depth	d3	approx. 174
Fastening holes	Vertical distance	a	365+2
	Vertical distance to the upper edge	b	11.5
	Horizontal distance between the fastening holes of the drive controller	c	150+0.2/–0.2
	Horizontal distance to the side edge of the drive controller	e	20

Tab. 29: SD6 dimensions, size 3 [mm]

8.2.7 Minimum clearances

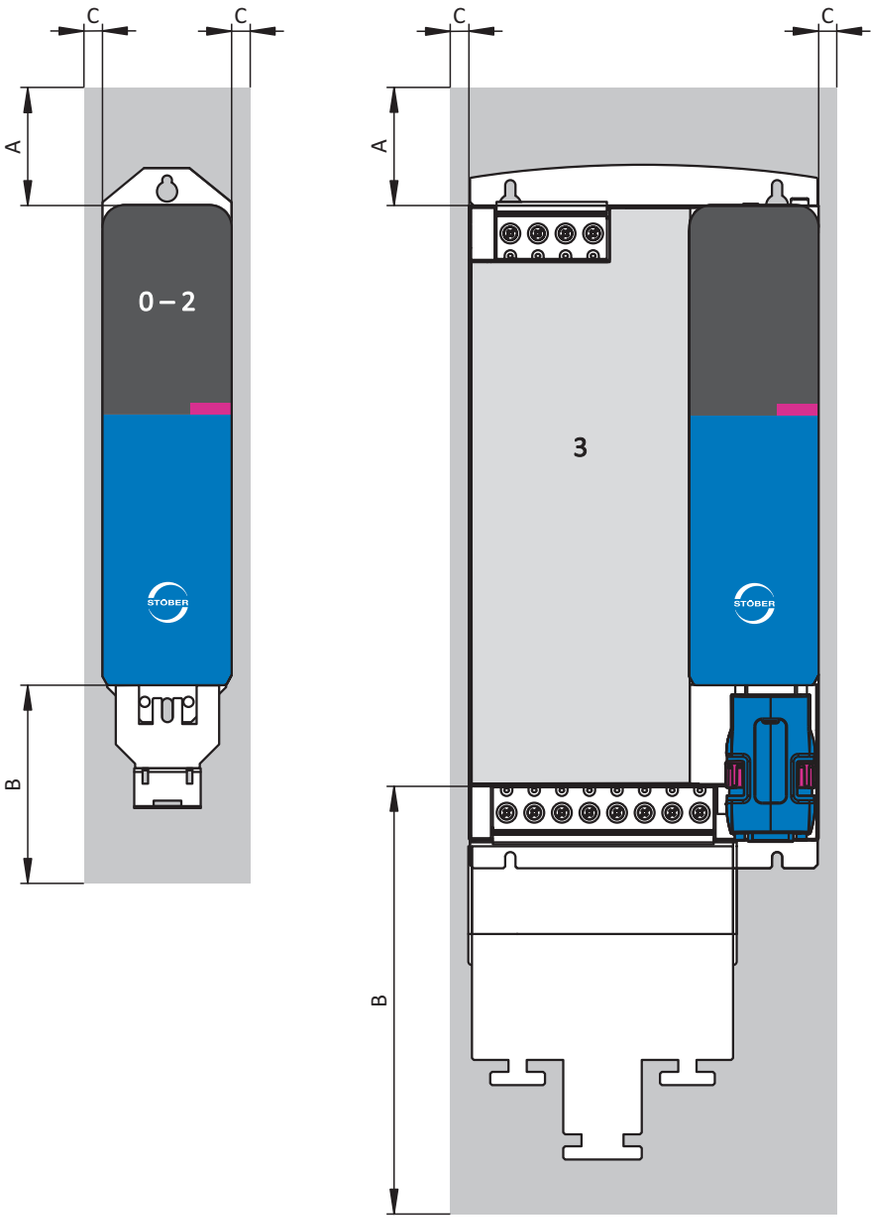

Fig. 3: Minimum clearances

The specified dimensions refer to the outside edges of the drive controller.

Minimum clearance	A (above)	B (below)	C (one the side)[8]
Size 0 – Size 2	100	100	5
... with EMC shroud	100	120	5
Size 3	100	100	5
... with EMC shroud	100	220	5

Tab. 30: Minimum clearances [mm]

Chokes and filters

Avoid installation below drive controllers or supply modules. For installation in a control cabinet, a distance of approximately 100 mm to other neighboring components is recommended. This distance ensures proper heat dissipation for chokes and filters.

Braking resistors

Avoid installation below drive controllers or supply modules. In order for heated air to flow out unimpeded, a minimum clearance of approximately 200 mm must be maintained in relation to neighboring components or walls and approximately 300 mm must be maintained to components above or ceilings.

[8] Installation without Quick DC-Link module

8.3 Drive controller/motor combinations

Parameterization of a STOBER drive controller is exceptionally easy, especially together with four-pole STOBER asynchronous motors. The motor is fully typified by inputting just the motor size (e.g. 90L) and its wiring (star or delta). A delta connection (measurement point 230 V, 50 Hz) is available for motors up to 3 kW (size 100). By increasing the voltage at higher frequencies, the full torque can be drawn through the motor up to 87 Hz. It usually makes sense to take this expanded speed adjustment range into account when selecting the gear unit. You can find more detailed information in the chapter [▶ 5.6].

An explanation of the formula symbols used can be found in the chapter [▶ 13.1].

									SD6 A04	**SD6 A06**	**SD6 A14**	**SD6 A16**	**SD6 A24**	**SD6 A26**	**SD6 A34**	**SD6 A36**	**SD6 A38**
									$I_{2N,PU}$ [A] ($f_{PWM,PU}$ = 4 kHz)								
	f_T [Hz]	pz	Con-nec-tion	P_N [kW]	n_N [rpm]	M_N [Nm]	M_k/M_N	I_N [A]	2.3	4.5	10	16	22	32	44	70	85
Δ 230 V / Y 400 V motor winding									**$I_{2N,PU}$ / I_N**								
IE3D080L04	50	4	Y	0.75	1445	5.0	3.7	1.7	1.4								
IE3D080L04	87	4	Δ	1.3	2503	5.0	3.7	2.94		1.5							
IE3D090S04	50	4	Y	1.1	1440	7.3	3.7	2.5		1.8							
IE3D090S04	87	4	Δ	1.91	2494	7.3	3.7	4.33		1.0							
IE3D090LX04	50	4	Y	1.5	1445	9.8	4.9	3.4		1.3							
IE3D090LX04	87	4	Δ	2.6	2503	9.8	4.9	5.89			1.7						
IE3D100KX04	50	4	Y	2.2	1450	14.5	3.8	4.55			2.2						
IE3D100KX04	87	4	Δ	3.81	2511	14.5	3.8	7.88			1.3	2.0					
IE3D100LX04	50	4	Y	3.0	1450	19.8	4	6.35			1.6						
IE3D100LX04	87	4	Δ	5.2	2511	19.8	4	11				1.5	2.0				
IE3D112M04	50	4	Δ	4.0	1465	26.1	4.5	7.9			1.3	2.0					
IE3D132S04	50	4	Δ	5.5	1480	35	5.4	12				1.3	1.8				
IE3D132M04	50	4	Δ	7.5	1475	49	3.9	14.5				1.1	1.5				
IE3D160M4	50	4	Δ	11	1475	71	3.2	21					1.0	1.5	2.1		
IE3D160L04	50	4	Δ	15	1490	96	3.9	28						1.1	1.6		
IE3D180M04	50	4	Δ	18.5	1475	120	3.0	34.5							1.3	2.0	
IE3D180L04	50	4	Δ	22	1480	142	3.2	40.5							1.1	1.7	2.1
IE3D200L04	50	4	Δ	30	1485	193	2.6	54.5								1.3	1.6
IE3D225S04	50	4	Δ	37	1490	237	2.7	67								1.0	1.3
IE3D225M04	50	4	Δ	45	1482	290	2.6	84									1.0

8.4 Accessories

You can find information about the available accessories in the following chapters.

8.4.1 Safety technology

ST6 safety module – STO over terminals

Included in the standard version.

ID No. 56431
Optional accessory for the use of the Safe Torque Off safety function (STO) in safety-relevant applications (PL e, SIL 3) in accordance with DIN EN ISO 13849-1 and DIN EN 61800-5-2. Connection to a higher-level safety circuit via terminal X12.

SE6 safety module – Expanded safety functionality using terminals

ID No. 56432
Optional accessories for use in safety-related applications up to PL e, SIL 3 in accordance with DIN EN ISO 13849-1 and DIN EN 61800-5-2. In addition to the basic Safe Torque Off (STO) safety function, SE6 provides other safety functions specified in DIN EN 61800-5-2. In addition to the safe stop functions Safe Stop 1 (SS1) and Safe Stop 2 (SS2), these also include Safely-Limited Speed (SLS), Safe Brake Control (SBC), Safe Direction (SDI) and Safely-Limited Increment (SLI). The normative safety functions are supplemented by practical additional functions such as Safe Brake Test (SBT). Connection to the higher-level safety circuit using terminals X14 and X15.

X50 adapter cable (SE6 option)

ID No. 56434
Connection cable for the X50 encoder interface of the SE6 safety module with open cable ends. 1.5 m.

8.4.2 Communication

The SD6 drive controller has two interfaces for IGB communication on the top of the device as standard. The communication module is installed in the shaft at the top and it is used to connect the drive controller to the fieldbus system.
The following communication modules are available:

- EC6 for the EtherCAT connection
- CA6 for the CANopen connection
- PN6 for the PROFINET connection

IGB connecting cable

Cable for connecting the X3A or X3B interface for IGB, CAT5e, magenta.
The following versions are available:
ID No. 56489: 0.4 m.
ID no. 56490: 2 m.

PC connecting cables

ID No. 49857
Cable for connecting the X3A or X3B interface with the PC, CAT5e, blue, 5 m.

USB 2.0 Ethernet adapter

ID No. 49940
Adapter for connecting Ethernet to a USB port.

EC6 communication module

ID No. 138425
Communication module for the EtherCAT connection.

EtherCAT cables

Ethernet patch cable, CAT5e, yellow.
The following designs are available:
ID No. 49313: Length approx. 0.2 m.
ID No. 49314: Length approx. 0.35 m.

CA6 communication module

ID No. 138427
Communication module for the CANopen connection.

PN6 communication module

ID No. 56426
Communication module for the PROFINET connection.

8.4.3 Terminal module

XI6 terminal module

ID no. 138421

Terminal module for connecting analog and binary signals as well as encoders.

Supported inputs and outputs:

- 13 binary inputs (24 V_{DC})
- 10 binary outputs (24 V_{DC})
- 3 analog inputs (±10 V_{DC}, 1 x 0 – 20 mA, 16 bits)
- 2 analog outputs (±10 V_{DC}, 12 bits)

Supported encoders / interfaces:

- SSI encoder (simulation and evaluation)
- TTL incremental encoder, differential (simulation and evaluation)
- HTL incremental encoder, single-ended (simulation and evaluation)
- TTL pulse train, differential (simulation and evaluation)
- HTL pulse train, single-ended (simulation and evaluation)

RI6 terminal module

ID no. 138422

Terminal module for connecting analog and binary signals as well as encoders.

Supported inputs and outputs:

- 5 binary inputs (24 V_{DC})
- 2 binary outputs (24 V_{DC})
- 2 analog inputs (±10 V_{DC}, 1 x 0 – 20 mA, 16 bits)
- 2 analog outputs (±10 V_{DC}, ±20 mA, 12 bits)

Supported encoders / interfaces:

- Resolver (evaluation)
- EnDat 2.1 sin/cos encoder (evaluation)
- EnDat 2.1/2.2 digital encoder (evaluation)
- Sin/cos encoder (evaluation)
- SSI encoder (simulation and evaluation)
- TTL incremental encoder, differential (simulation and evaluation)
- TTL incremental encoder, single-ended (evaluation)
- HTL incremental encoder, single-ended (simulation and evaluation)
- TTL pulse train, differential (simulation and evaluation)
- TTL pulse train, single-ended (evaluation)
- HTL pulse train, single-ended (simulation and evaluation)

Information

For connecting EnDat 2.1 sin/cos cables with a 15-pin D-sub connector with an integrated motor temperature sensor, you require the AP6A02 interface adapter (ID No. 56523), available separately, to feed out the motor temperature sensor leads.

IO6 terminal module

ID no. 138420

Terminal module for connecting analog and binary signals as well as encoders.

Supported inputs and outputs:

- 5 binary inputs (24 V_{DC})
- 2 binary outputs (24 V_{DC})
- 2 analog inputs (±10 V_{DC}, 1 x 0 – 20 mA, 12 bits)
- 2 analog outputs (±10 V_{DC}, ±20 mA, 12 bits)

Supported encoders / interfaces:

- HTL incremental encoder, single-ended (simulation and evaluation)
- HTL pulse train, single-ended (simulation and evaluation)

8.4.4 DC link connection

If you want to connect SD6 drive controllers into the DC link group, you will need the Quick DC-Link module of type DL6A.

You receive the DL6A rear section modules in different designs for a horizontal connection, suitable for the size of the drive controller.

The quick fastening clamps for attaching the copper rails and an insulation connection piece are contained in the scope of delivery. The copper rails are not included in the scope of delivery. These must have a cross-section of 5 x 12 mm. Insulation end sections are available separately.

DL6A Quick DC-Link for drive controller

The following designs are available:

DL6A0

ID No. 56440

Rear section module for size 0 drive controllers.

DL6A1

ID No. 56441

Rear section module for size 1 drive controller.

DL6A2

ID No. 56442

Rear section module for size 2 drive controllers.

DL6A3

ID No. 56443

Rear section module for size 3 drive controllers.

DL6A Quick DC-Link insulation end section

ID No. 56494

Insulation end sections for the left and right termination of the group, 2 pcs.

8.4.5 Braking resistor

In addition to the drive controller, STOBER offers braking resistors in different sizes and performance classes described below. For the selection, note the minimum permitted braking resistances specified in the technical data of the individual types of drive controllers.

8.4.5.1 FZMU, FZZMU tubular fixed resistor

Type	FZMU 400×65			FZZMU 400×65		
ID No.	49010	55445	55446	53895	55447	55448
SD6A02	X	—	—	—	—	—
SD6A04	X	—	—	—	—	—
SD6A06	X	—	—	—	—	—
SD6A14	(X)	—	—	X	—	—
SD6A16	(X)	—	—	X	—	—
SD6A24	(—)	X	—	(X)	X	—
SD6A26	(—)	X	—	(X)	X	—
SD6A34	(—)	(X)	X	(—)	(X)	X
SD6A36	(—)	(X)	X	(—)	(X)	X
SD6A38	(—)	(X)	X	(—)	(X)	X

Tab. 31: Assignment of FZMU, FZZMU braking resistor – SD6 drive controller

X	Recommended
(X)	Possible
(—)	Useful under certain conditions
—	Not possible

Properties

Specification	FZMU 400×65			FZZMU 400×65		
ID No.	49010	55445	55446	53895	55447	55448
Type	Tubular fixed resistor			Tubular fixed resistor		
Resistance [Ω]	100	22	15	47	22	15
Power [W]	600			1200		
Therm. time const. τ_{th} [s]	40			40		
Pulse power for < 1 s [kW]	18			36		
U_{max} [V]	848			848		
Weight [kg]	Approx. 2.2			Approx. 4.2		
Protection class	IP20			IP20		
Test symbols	c UL us CE			c UL us CE		

Tab. 32: FZMU, FZZMU specification

Dimensions

Dimension	FZMU 400×65			FZZMU 400×65		
ID No.	49010	55445	55446	53895	55447	55448
L x D	400 × 65			400 × 65		
H	120			120		
K	6.5 × 12			6.5 × 12		
M	430			426		
O	485			450		
R	92			185		
U	64			150		
X	10			10		

Tab. 33: FZMU, FZZMU dimensions [mm]

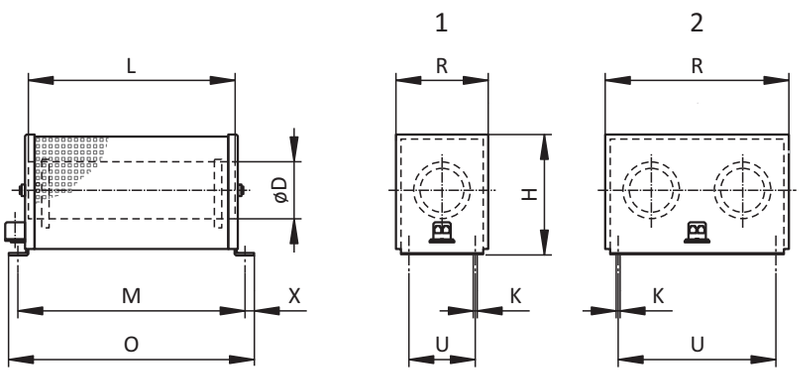

Fig. 4: FZMU (1), FZZMU (2) dimensional drawing

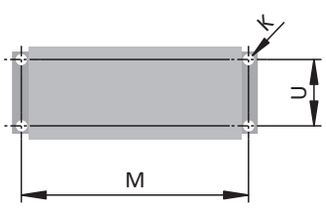

Fig. 5: FZMU, FZZMU drilling diagram

8.4.5.2 GVADU, GBADU flat resistor

Type	GVADU 210×20	GBADU 265×30	GBADU 405×30	GBADU 335×30	GBADU 265×30
ID No.	55441	55442	55499	55443	55444
SD6A02	X	X	X	—	—
SD6A04	X	X	X	—	—
SD6A06	X	X	X	—	—
SD6A14	(X)	(X)	(X)	X	—
SD6A16	(X)	(X)	(X)	X	—
SD6A24	(—)	(—)	(—)	(X)	X
SD6A26	(—)	(—)	(—)	(X)	X
SD6A34	(—)	(—)	(—)	(—)	(X)
SD6A36	(—)	(—)	(—)	(—)	(X)
SD6A38	(—)	(—)	(—)	(—)	(X)

Tab. 34: Assignment of GVADU, GBADU braking resistor – SD6 drive controller

X	Recommended
(X)	Possible
(—)	Useful under certain conditions
—	Not possible

Properties

Specification	GVADU 210×20	GBADU 265×30	GBADU 405×30	GBADU 335×30	GBADU 265×30
ID No.	55441	55442	55499	55443	55444
Type	Flat resistor	Flat resistor	Flat resistor	Flat resistor	Flat resistor
Resistance [Ω]	100	100	100	47	22
Power [W]	150	300	500	400	300
Therm. time const. τ_{th} [s]	60	60	60	60	60
Pulse power for < 1 s [kW]	3.3	6.6	11	8.8	6.6
U_{max} [V]	848	848	848	848	848
Cable design	Radox	FEP	FEP	FEP	FEP
Cable length [mm]	500	500	500	500	500
Conductor cross-section [AWG]	18/19 (0.82 mm²)	14/19 (1.9 mm²)	14/19 (1.9 mm²)	14/19 (1.9 mm²)	14/19 (1.9 mm²)
Weight [g]	300	950	1450	1200	950
Protection class	IP54	IP54	IP54	IP54	IP54
Test symbols	c UL us CE	c UL us CE	c UL us CE	c UL us CE	c UL us CE

Tab. 35: GVADU, GBADU specification

Dimensions

Dimension	GVADU 210×20	GBADU 265×30	GBADU 405×30	GBADU 335×30	GBADU 265×30
ID No.	55441	55442	55499	55443	55444
A	210	265	405	335	265
H	192	246	386	316	246
C	20	30	30	30	30
D	40	60	60	60	60
E	18.2	28.8	28.8	28.8	28.8
F	6.2	10.8	10.8	10.8	10.8
G	2	3	3	3	3
K	2.5	4	4	4	4
J	4.3	5.3	5.3	5.3	5.3
β	65°	73°	73°	73°	73°

Tab. 36: GVADU, GBADU dimensions [mm]

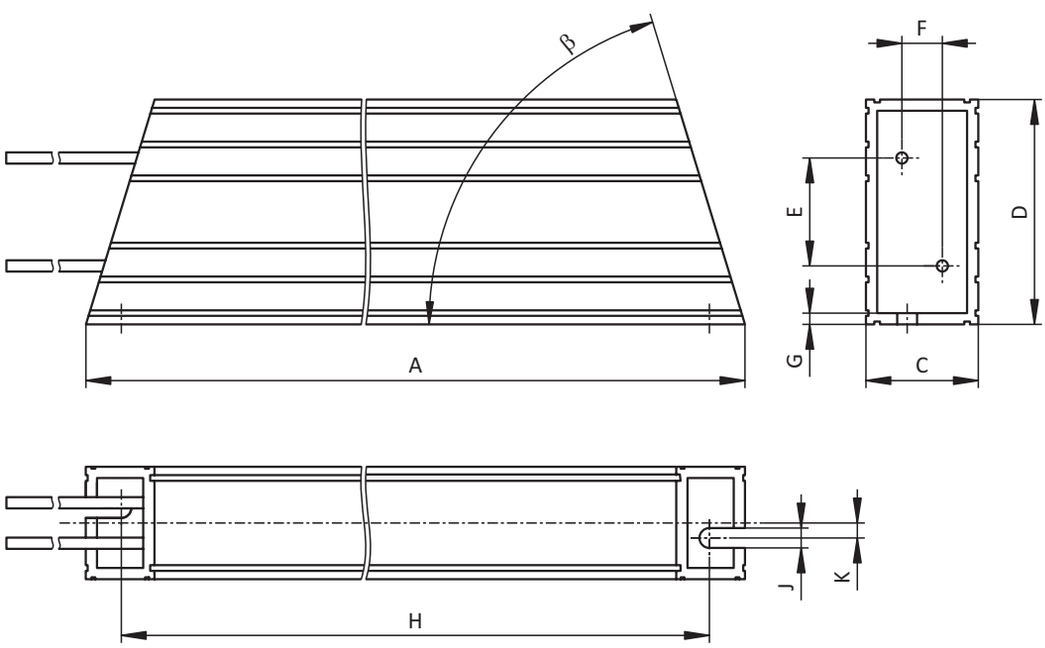

Fig. 6: GVADU, GBADU dimensional drawing

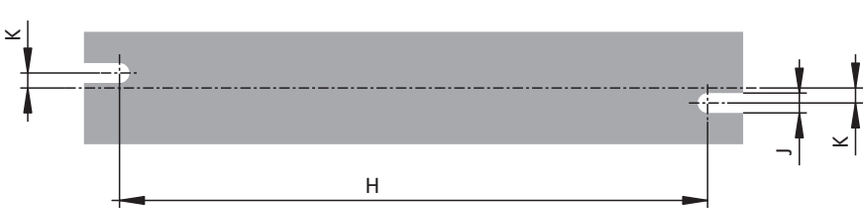

Fig. 7: GVADU, GBADU drilling diagram

8.4.5.3 FGFKU steel-grid fixed resistor

Type	FGFKU			
ID No.	55449	55450	55451	53897
SD6A24	X	—	—	—
SD6A26	X	—	—	—
SD6A34	(X)	X	X	X
SD6A36	(X)	X	X	X
SD6A38	(X)	X	X	X

Tab. 37: Assignment of FGFKU braking resistor – SD6 drive controller

X	Recommended
(X)	Possible
—	Not possible

Properties

Specification	FGFKU			
ID No.	55449	55450	55451	53897
Type	Steel-grid fixed resistor			
Resistance [Ω]	22	15	15	15
Power [W]	2500	2500	6000	8000
Therm. time const. τ_{th} [s]	30	30	20	20
Pulse power for < 1 s [kW]	50	50	120	160
U_{max} [V]	848	848	848	848
Weight [kg]	Approx. 7.5	Approx. 7.5	12	18
Protection class	IP20	IP20	IP20	IP20
Test symbols				

Tab. 38: FGFKU specification

Dimensions

Dimension	FGFKU			
ID No.	55449	55450	55451	53897
A	270	270	370	570
B	295	295	395	595
C	355	355	455	655

Tab. 39: FGFKU dimensions [mm]

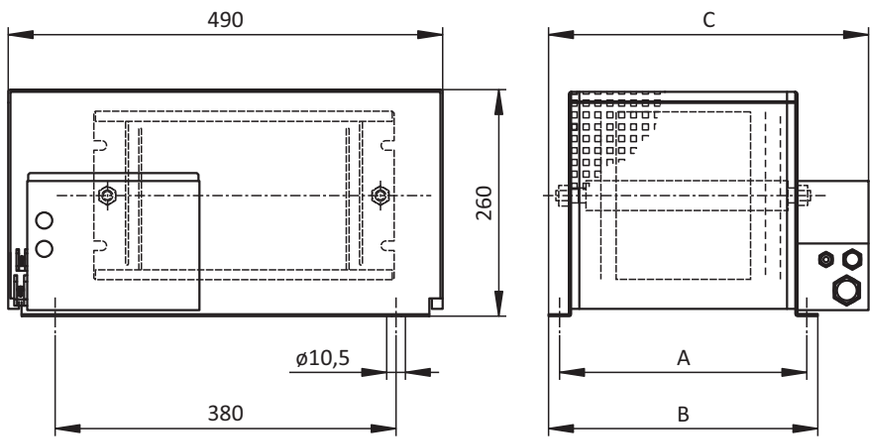

Fig. 8: FGFKU dimensional drawing

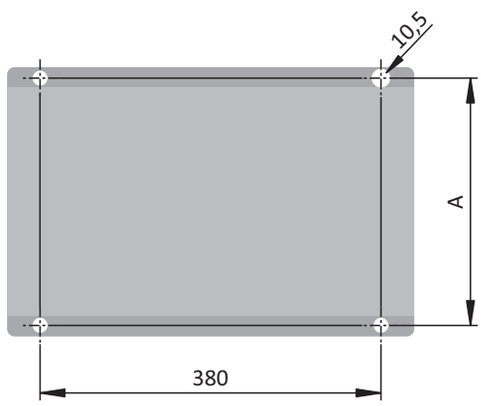

Fig. 9: FGFKU drilling diagram

8.4.5.4 RB 5000 rear section braking resistor

Type	RB 5022	RB 5047	RB 5100
ID No.	45618	44966	44965
SD6A02	—	—	X
SD6A04	—	—	X
SD6A06	—	—	X
SD6A14	—	X	(X)
SD6A16	—	X	(X)
SD6A24	X	—	—
SD6A26	X	—	—
SD6A34	—	—	—
SD6A36	—	—	—
SD6A38	—	—	—

Tab. 40: Assignment of RB 5000 braking resistor – SD6 drive controller

X	Recommended
(X)	Possible
—	Not possible

Properties

Specification	RB 5022	RB 5047	RB 5100
ID No.	45618	44966	44965
Resistance [Ω]	22	47	100
Power [W]	100	60	60
Therm. time const. τ_{th} [s]	8	8	8
Pulse power for < 1 s [kW]	1.5	1.0	1.0
U_{max} [V]	800	800	800
Weight [g]	approx. 640	approx. 460	approx. 440
Cable design	Radox	Radox	Radox
Cable length [mm]	250	250	250
Conductor cross-section [AWG]	18/19 (0.82 mm²)	18/19 (0.82 mm²)	18/19 (0.82 mm²)
Maximum torque of M5 threaded bolts [Nm]	5	5	5
Protection class	IP40	IP40	IP40
Test symbols			

Tab. 41: RB 5000 specification

Dimensions

Dimension	RB 5022	RB 5047	RB 5100
ID No.	45618	44966	44965
Height	300	300	300
Width	94	62	62
Depth	18	18	18
Drilling diagram corresponds to size	Size 2	Size 1	Size 0 and Size 1

Tab. 42: RB 5000 dimensions [mm]

8.4.6 Choke

Technical specifications for suitable chokes can be found in the following chapters.

8.4.6.1 TEP power choke

For each size 3 SD6 drive controller, you need one power choke.

Properties

Specification	TEP4010-2US00
ID No.	56528
Phases	3
Thermally allowed continuous current	100 A
Nominal current $I_{N,MF}$	90 A
Absolute loss P_V	103 W
Inductance	0.14 mH
Voltage range	3 × 400 V_{AC}, +32%/−50% 3 × 480 V_{AC}, +10%/−58%
Voltage drop U_k	2%
Frequency range	50/60 Hz
Protection class	IP00
Max. surrounding temperature $\vartheta_{amb,max}$	40 °C
Insulation class	B
Connection	Screw terminal
Connection type	Flexible with and without end sleeve
Max. conductor cross-section	6 – 35 mm²
Tightening torque	2.5 Nm
Insulation stripping length	17 mm
Installation	Screws
Directive	EN 61558-2-20
UL Recognized Component (CAN; USA)	Yes
Test symbol, symbol	

Tab. 43: TEP specification

Derating – Effect of surrounding temperature

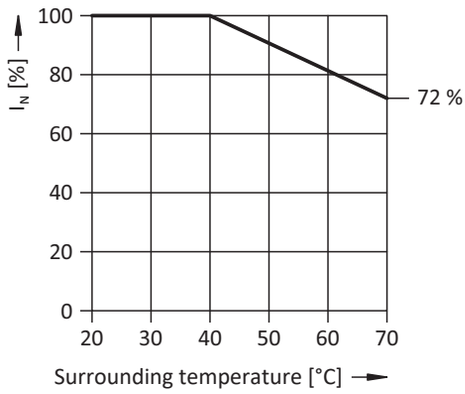

Fig. 10: Derating the nominal current based on surrounding temperature

Derating – Effect of the installation elevation

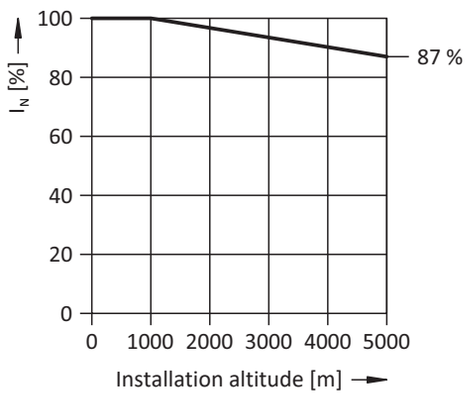

Fig. 11: Derating the nominal current depending on installation elevation

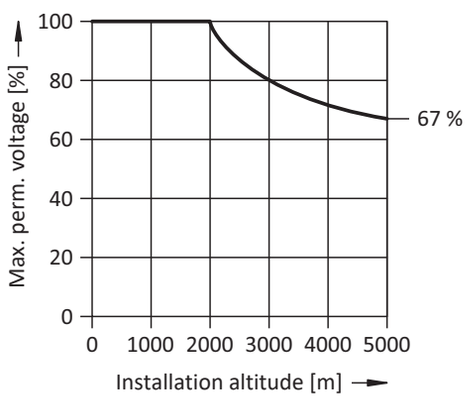

Fig. 12: Derating the voltage depending on installation elevation

Dimensions and weight

Dimensions	TEP4010-2US00
Height [mm]	235
Width [mm]	219
Depth [mm]	118
Vertical distance 1 – fastening holes [mm]	201
Vertical distance 2 – Fastening holes [mm]	136
Horizontal distance 1 – fastening holes [mm]	88
Horizontal distance 2 – Fastening holes [mm]	75
Drill holes – Depth [mm]	7
Drill holes – Width [mm]	12
Screw connection – M	M6
Weight [g]	10000

Tab. 44: TEP dimensions and weight

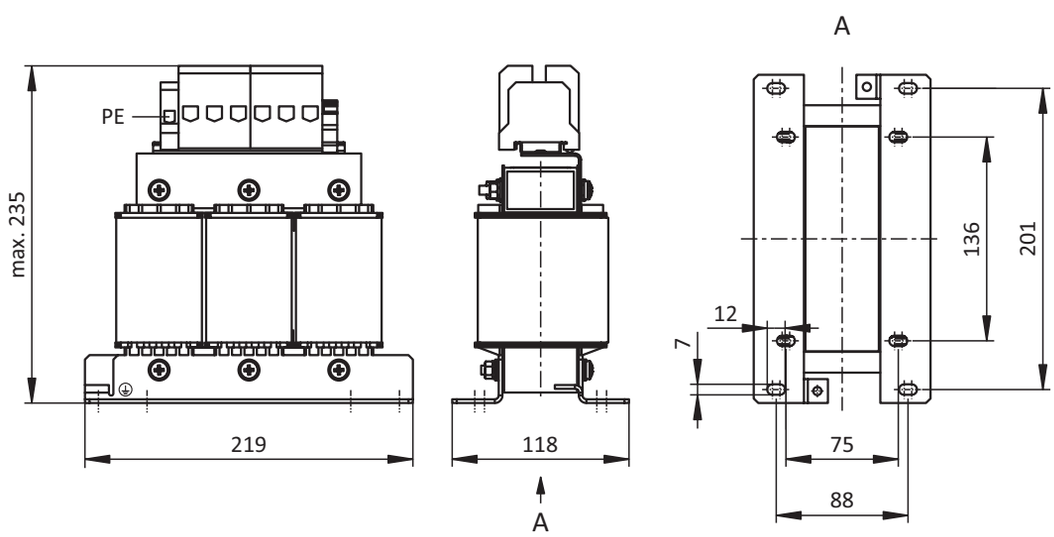

Fig. 13: Power choke dimensional drawing

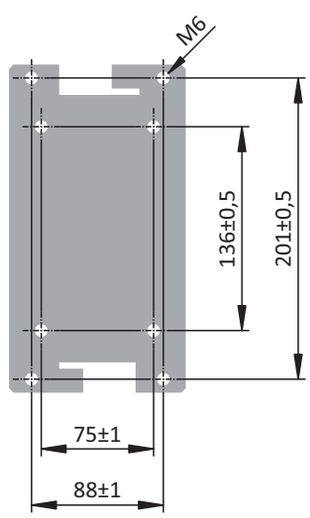

Fig. 14: Power choke drilling diagram

8.4.6.2 TEP output choke

Output chokes are required for connecting drive controllers of size 0 to 2 to synchronous servo motors or asynchronous motors from a cable length > 50 m in order to reduce interference pulses and protect the drive system.

Information

The following technical data only applies to a rotating magnetic field frequency of 200 Hz. For example, this rotating magnetic field frequency is achieved with a motor with 4 pole pairs and a nominal speed of 3000 rpm. Always observe the specified derating for higher rotating magnetic field frequencies. Also observe the relationship with the clock frequency.

Properties

Specification	TEP3720-0ES41	TEP3820-0CS41	TEP4020-0RS41
ID No.	53188	53189	53190
Voltage range	3 × 0 to 480 V_{AC}		
Frequency range	0 – 200 Hz		
Nominal current $I_{N,MF}$ at 4 kHz	4 A	17.5 A	38 A
Nominal current $I_{N,MF}$ at 8 kHz	3.3 A	15.2 A	30.4 A
Max. permitted motor cable length with output choke	100 m		
Max. surrounding temperature $\vartheta_{amb,max}$	40 °C		
Protection class	IP00		
Winding losses	11 W	29 W	61 W
Iron losses	25 W	16 W	33 W
Connection	Screw terminal		
Max. conductor cross-section	10 mm²		
UL Recognized Component (CAN; USA)	Yes		
Test symbols	c UL us CE		

Tab. 45: TEP specification

Project configuration

Select the output chokes in accordance with the nominal currents of the output chokes, motor and drive controller. In particular, observe the derating of the output choke for rotating magnetic field frequencies higher than 200 Hz. You can calculate the rotating magnetic field frequency for your drive with the following formula:

$$f_N = n_N \times \frac{p}{60}$$

Derating – Effect of the clock frequency

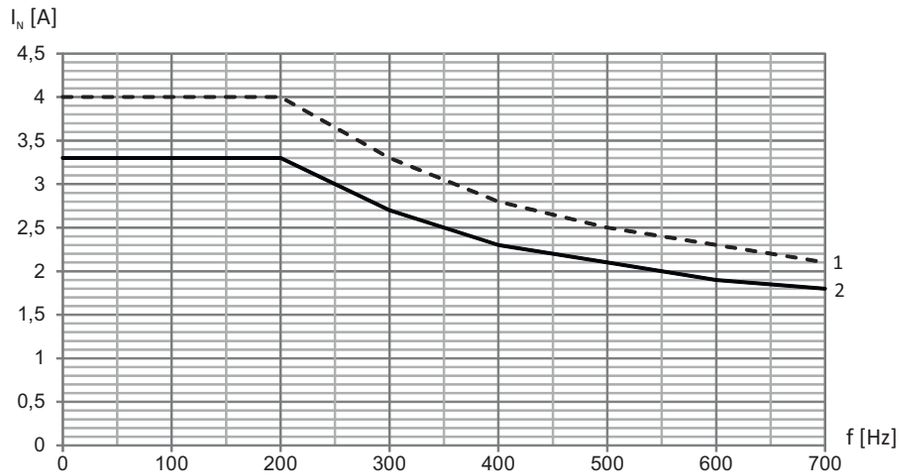

Fig. 15: Derating the nominal current depending on the clock frequency, TEP3720-0ES41

1 4 kHz clock frequency

2 8 kHz clock frequency

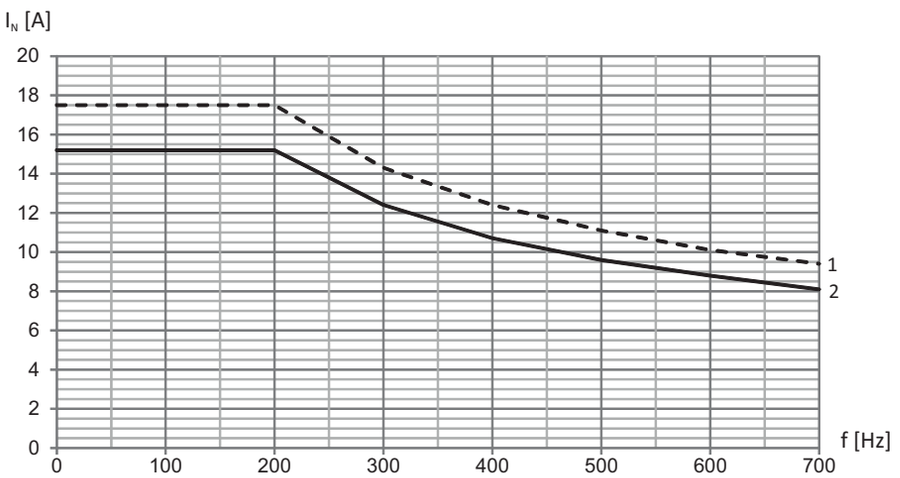

Fig. 16: Derating the nominal current depending on the clock frequency, TEP3820-0CS41

1 4 kHz clock frequency

2 8 kHz clock frequency

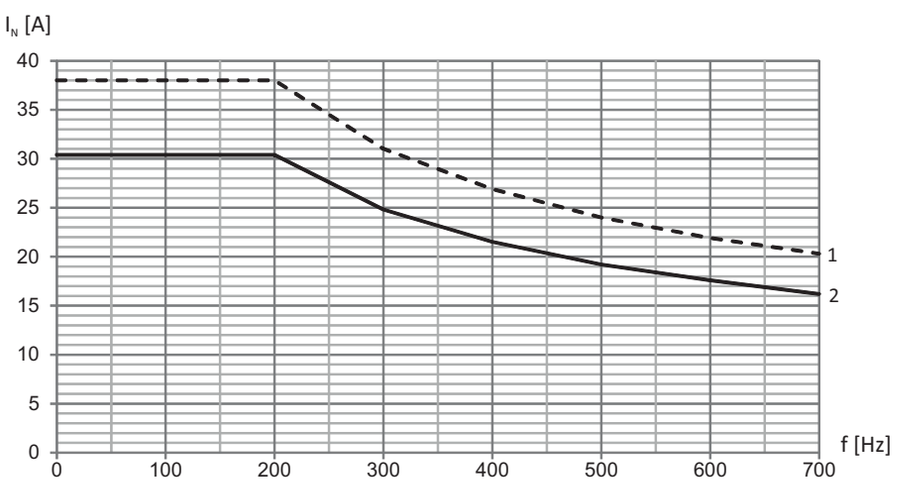

Fig. 17: Derating the nominal current depending on the clock frequency, TEP4020-0RS41

1 4 kHz clock frequency

2 8 kHz clock frequency

Derating – Effect of surrounding temperature

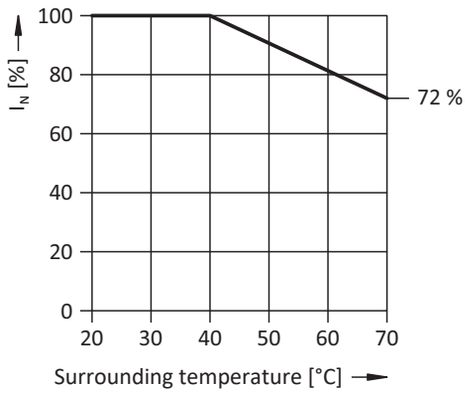

Fig. 18: Derating the nominal current based on surrounding temperature

Derating – Effect of the installation elevation

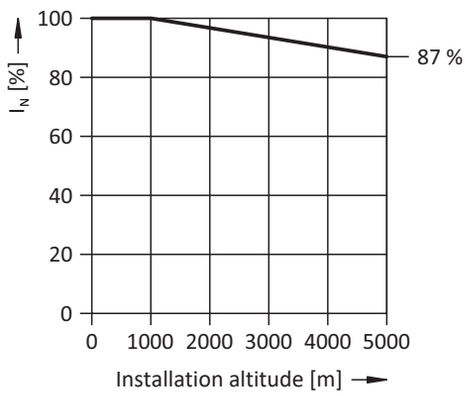

Fig. 19: Derating the nominal current depending on installation elevation

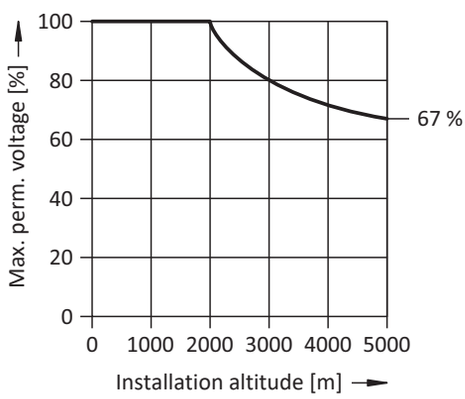

Fig. 20: Derating the voltage depending on installation elevation

Dimensions and weight

Dimension	TEP3720-0ES41	TEP3820-0CS41	TEP4020-0RS41
Height h [mm]	Max. 153	Max. 153	Max. 180
Width w [mm]	178	178	219
Depth d [mm]	73	88	119
Vertical distance – Fastening holes a1 [mm]	166	166	201
Vertical distance – Fastening holes a2 [mm]	113	113	136
Horizontal distance – Fastening holes b1 [mm]	53	68	89
Horizontal distance – Fastening holes b2 [mm]	49	64	76
Drill holes – Depth e [mm]	5.8	5.8	7
Drill holes – Width f [mm]	11	11	13
Screw connection – M	M5	M5	M6
Weight [g]	2900	5900	8800

Tab. 46: TEP dimensions and weight

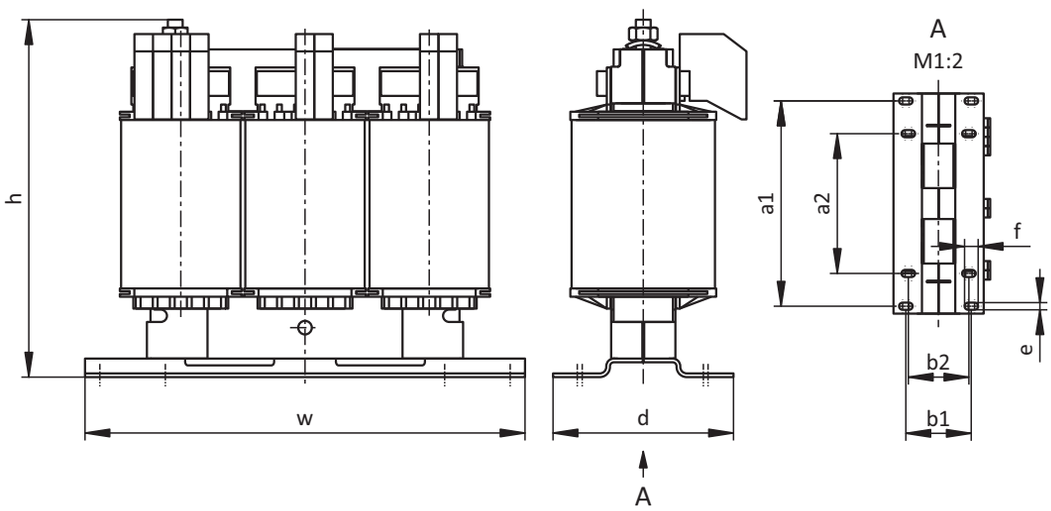

Fig. 21: TEP dimensional drawing

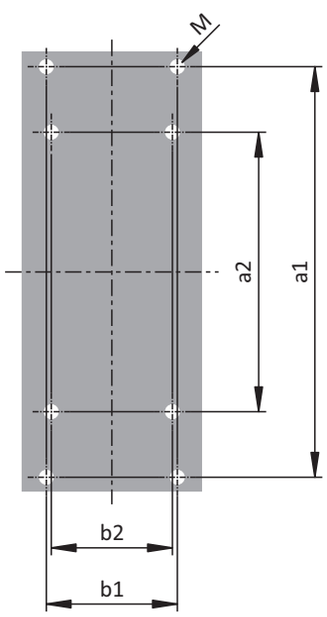

Fig. 22: TEP drilling diagram

8.4.7 EMC shroud

You can use the EM6A EMC shroud to connect the cable shield of the power cable. Two different designs are available.

EMC shroud EM6A0

ID No. 135115
EMC shroud for the SD6 drive controller up to size 2.
Accessory part for shield connection of the power cable.
Can be attached to the basic housing.
Including shield connection terminal.

EMC shroud EM6A3

ID No. 135120
EMC shroud for drive controllers of the MDS 5000, SDS 5000 and SD6 series.
Accessory part for shield connection of the power cable for drive controllers up to size 3.
Can be attached to the basic housing.
Including shield connection terminal.
If necessary you can also connect the cable shield of the braking resistor and DC link connection to the shroud. Additional shield connection terminals are available as accessories for this purpose (ID No. 56521).

8.4.8 Removable data storage

Paramodul removable data storage

Included in the standard version.

ID No. 56403
The plug-in Paramodul with integrated microSD card (512 MB or greater, industrial type) is available as a storage medium.
The microSD card is also available separately as a spare part (ID No. 56436).

8.5 Further information

8.5.1 Directives and standards

The following European directives and standards are relevant to the drive controllers:

- Machinery Directive 2006/42/EC
- Low Voltage Directive 2014/35/EU
- EMC Directive 2014/30/EU
- EN 61326-3-1:2008
- EN 61800-3:2004 and A1:2012
- EN 61800-5-1:2007
- EN 61800-5-2:2007
- EN 50178:1997

8.5.2 Symbols, marks and test symbols

Choke without overload protection in accordance with DIN EN 61558-2-20.

Grounding symbol
Grounding symbol in accordance with IEC 60417, symbol 5019.

RoHS lead-free mark
Marking in accordance with RoHS directive 2011-65-EU.

CE mark
Manufacturer's self declaration: The product meets the requirements of EU directives.

UL test symbol
This product is listed by UL for the United States and Canada. Representative samples of this product have been evaluated by UL and meet the requirements of applicable standards.

UL recognized component mark
This component or material is recognized by UL. Representative samples of this product have been evaluated by UL and meet applicable requirements.

8.5.3 Additional documentation

Additional documentation related to the product can be found at http://www.stoeber.de/en/downloads/

Enter the ID of the documentation in the Search... field.

Documentation	ID
Manual for SD6 drive controllers	442426

9 POSIDYN SDS 5000 Servo inverters

Table of contents

9.1 Overview ... 310

9.1.1 Features ... 311

9.1.2 Software components ... 312

9.1.3 Application training ... 313

9.2 Technical data ... 314

9.2.1 Type designation ... 314

9.2.2 Sizes ... 314

9.2.3 General technical data ... 315

9.2.4 Electrical data ... 315

9.2.5 Derating by increasing the clock frequency ... 321

9.2.6 Dimensions ... 322

9.2.7 Minimum clearances ... 324

9.3 Inverter/motor combinations ... 325

9.4 Accessories ... 326

9.4.1 Safety technology ... 326

9.4.2 Communication ... 326

9.4.3 Terminal module ... 327

9.4.4 Braking resistor ... 328

9.4.5 Choke ... 334

9.4.6 Brake module and EMC shroud ... 338

9.4.7 Removable data storage ... 338

9.5 Further information ... 339

9.5.1 Directives and standards ... 339

9.5.2 Symbols, marks and test symbols ... 339

9.5.3 Additional documentation ... 339

9 Servo inverters

POSIDYN SDS 5000

9.1 Overview

High dynamics for fully digital servo axes

Features

- Nominal output current up to 85 A
- 250% overload capacity
- Power range: 0.75 kW to 45 kW
- Control of rotary synchronous servo motors and asynchronous motors
- Multi-functional encoder interfaces
- Automatic motor parameterization from the electronic motor nameplate
- Isochronic system bus (IGB motion bus) for parameterization and multi-axis applications
- Communication using PROFIBUS DP, PROFINET, CANopen or EtherCAT
- Safe Torque Off (STO) and Safe Stop 1 (SS1) safety functions: SIL 3, PL e (cat. 3)
- Digital and analog inputs and outputs as an option
- Brake chopper, brake control and line filter
- Convenient operating unit consisting of plain-text display and buttons
- Paramodul removable data storage

9.1.1 Features

The 5th generation series of STOBER inverters are purely digital, modular inverter systems for operating rotary synchronous and asynchronous motors. It includes product types for direct operation on a one or three-phase network in a voltage range from 200 V_{AC} to 528 V_{AC}. An EMC line filter is integrated. EnDat 2.1/2.2 digital, SSI and incremental (HTL/TTL) are available as encoder interfaces in the standard design. A resolver evaluation is available as an option. The inverter can be adapted to the requirements of individual applications using different option modules. The ASP 5001 safety module makes it possible to implement the Safe Torque Off (STO) and Safe Stop 1 (SS1) safety functions in accordance with DIN EN ISO 13849-1 and DIN EN 61800-5-2 for safety-relevant applications. Communication modules provide the connection to a controller over the PROFIBUS DP, PROFINET, CANopen or EtherCAT fieldbus. In addition, terminal modules are available for connecting analog and binary signals as well as additional encoder signals. A plain text display and keyboard simplify diagnostics in the event of a fault and enable fast access to parameters. The Paramodul removable data storage can be used to transfer all application-relevant data from one inverter to another.

The vector control, sensorless vector control, high performance sensorless vector control and U/f controller control modes are available for use with asynchronous motors.

POSIDYN SDS 5000

Integrated bus (IGB) for performance, convenience and safety

SDS 5000 servo inverters feature two interfaces for the integrated bus in the standard version. The integrated bus is used for easy configuration over Ethernet and isochronic data exchange for the following functions:

- Multi-axis synchronization between the servo inverters (IGB motion bus)
- Internet connection for remote maintenance of individual and multiple inverters
- Direct connection between servo inverter and PC

IGB motion bus

The IGB motion bus allows for cyclic, isochronic data exchange between multiple POSIDYN SDS 5000 units integrated into the IGB network. In addition to transferring guide values for master/slave operation, any other data items can also be exchanged, such as tailor-made applications.

STOBER remote maintenance concept

STOBER remote maintenance enables commissioning software to be used to perform all processes and sequences just like an on-site service visit. The concept guides users through a controlled and protected procedure. It ensures that the person responsible for the machine is there on site to pay attention to special situations and personal safety. On the other end, the remote maintenance specialist has the assurance of communicating with a responsible employee on site who is monitoring the situation on the machine.

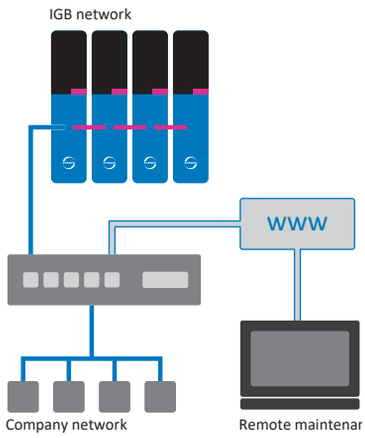

Remote maintenance enables all processes and sequences to be performed just like an on-site service visit.

Brake management

Using the optional BRS 5001 brake module, the POSIDYN SDS 5000 servo inverter can activate one or two 24 V_{DC} brake systems. Brake management provides the following functions for both brake systems:

- Cyclic brake test
- Bed in brake

Optionally available: BRS 5001 brake module

POSITool

The 5th generation of POSITool project configuration and commissioning software has all the functions needed for efficient use of inverters in single and multi-axis applications.

Paramodul removable data storage

Removable data storage for fast series commissioning by copying and easy service when replacing devices.

9.1.2 Software components

Modular application software

Various standard applications can be loaded onto the devices of the 5th STOBER inverter generation with the POSITool commissioning software as needed. Furthermore, programming based on IEC 61131-3 with CFC can be used to create new applications or expand existing ones. The inverter operating system is multi-axis capable. It supports up to four axes with separate application and parameter ranges.

Velocity mode (standard application)

- **Fast set value**
  Simple speed application for lean applications. The speed set value and torque limiting can be specified using analog inputs as well as digitally.

Torque/force and velocity mode (standard application)

- **Comfort set value**
  Expanded torque and speed set value application. Set values and limits can be assigned with the fast set value as well as using fixed values, motor potentiometers and other functions.
- **Technology controller**
  PID controller for torque or speed-controlled applications.

Positioning and master/slave mode (standard application)

- **Command, synchronous command**
  High-performance positioning application with a command interface based on PLCopen. The data for a motion task including target position, velocity and acceleration are transferred together over fieldbus to the inverter, which then processes them independently. The functional scope is rounded out by an electrical cam, motion block switching point and Posi-Latch.
- **Motion block**
  Extensive positioning application with up to 256 motion blocks based on PLCopen. The motion blocks can be selected individually over fieldbus or with binary inputs. They can also be started in a chain. The functional scope is rounded out by an electrical cam, motion block switching point and Posi-Latch.

Electronic cam disk with PLCopen interface (tailor-made applications)

The electronic cam disk application makes it possible to implement complex motion tasks such as:

- Flying saw
- Synchronizer (clock in/clock out)
- Cross cutter
- Welding bar/embossing stamp
- Print mark control

These applications can be implemented quickly and easily using readily understandable, free graphical programming based on IEC 61131-3 CFC. This also allows for customer-specific adaptations to special system conditions. Function blocks based on PLCopen Motion Control are available for this purpose for trained users.

9.1.3 Application training

STOBER offers a multi-level training program that focuses essentially on application programming of the motion controller and inverter.

G5 Basic

Training content: System overview, installation and commissioning of the inverter. Use of option modules. Parameterization, commissioning and diagnostics using the integrated display and commissioning software. Remote maintenance. Basics of controller optimization. Configuration of the drive train. Integrated software functions. Software applications. Connection to a higher-level controller. Basics of safety technology. Practical exercises on training topics.

Software used: POSITool.

G5 Advanced

Training content: Graphical programming with CFC. Special knowledge for regulating, control and safety technology. Practical exercises on training topics.

G5 CAM

Training content: Special knowledge of electronic cam disks. Practical exercises on training topics.

9.2 Technical data

Technical data for inverters can be found in the following sections.

9.2.1 Type designation

SDS	5	075	A

Tab. 1: Example code for type designation

Code	Designation	Design
SDS	Series	
5	Generation	Generation 5
075	Power	075 = 7.5 kW
–	Hardware variants	No identification: HW 199 or lower
A		A: HW 200 or higher

Tab. 2: Meaning of the example code

9.2.2 Sizes

Type	ID No.	Size
SDS 5007A	55428	Size 0
SDS 5008A	55429	Size 0
SDS 5015A	55430	Size 0
SDS 5040A	55431	Size 1
SDS 5075A	55432	Size 1
SDS 5110A	55433	Size 2
SDS 5150A	55434	Size 2
SDS 5220A	55435	Size 3
SDS 5370A	55436	Size 3
SDS 5450A	55437	Size 3

Tab. 3: Available SDS 5000 types and sizes

SDS 5000 in sizes 3, 2, 1 and 0

9.2.3 General technical data

The following information applies to all inverter types.

Device features	
Protection class of the device	IP20
Protection class of the installation space	At least IP54
Radio interference suppression	Integrated line filter in accordance with EN 61800-3:2012, interference emission class C3
Overvoltage category	III in accordance with EN 61800-5-1:2008
Test symbols	

Tab. 4: Device features

Transport and storage conditions	
Storage/ transport temperature	−20 °C to +70 °C Maximum change: 20 K/h
Relative humidity	Maximum relative humidity 85%, non-condensing
Vibration (transport) in accordance with DIN EN 60068-2-6	5 Hz ≤ f ≤ 9 Hz: 3.5 mm 9 Hz ≤ f ≤ 200 Hz: 10 m/s² 200 Hz ≤ f ≤ 500 Hz: 15 m/s²
Fall height for freefall[1] Weight < 100 kg in accordance with DIN EN 61800-2 (or DIN EN 60721-3-2:1997, class 2M1)	0.25 m

Tab. 5: Transport and storage conditions

Operating conditions	
Surrounding temperature during operation	0 °C to 45 °C with nominal data 45 °C to 55 °C with derating −2.5% / K
Relative humidity	Maximum relative humidity 85%, non-condensing
Installation altitude	0 m to 1000 m above sea level without restrictions 1000 m to 2000 m above sea level with −1.5%/100 m derating
Pollution degree	Pollution degree 2 in accordance with EN 50178
Ventilation	Installed fan
Vibration (operation) in accordance with DIN EN 60068-2-6	5 Hz ≤ f ≤ 9 Hz: 0.35 mm 9 Hz ≤ f ≤ 200 Hz: 1 m/s²

Tab. 6: Operating conditions

Discharge times	
Self-discharge of DC link	5 min

Tab. 7: Discharge times of the DC link circuit

9.2.4 Electrical data

The electrical data of the available sizes as well as the properties of the brake chopper can be found in the following sections.

An explanation of the formula symbols used can be found in the chapter [▶ 13.1].

[1] Only valid for components in original packaging

9.2.4.1 Size 0: SDS 5007A to SDS 5015A

Electrical data	SDS 5007A	SDS 5008A	SDS 5015A
ID No.	55428	55429	55430
Recommended motor rating	0.75 kW	0.75 kW	1.5 kW
U_{1PU}	1 × 230 V, +20% / −40%, 50/60 Hz	3 × 400 V, +32% / −50%, 50 Hz; 3 × 480 V, +10% / −58%, 60 Hz	
$I_{1N,PU}$	1 × 5.9 A	3 × 2.2 A	3 × 4 A
f_{2PU}	0 – 700 Hz		
U_{2PU}	0 – 230 V	0 – 400 V	
U_{maxPU}	440 V	830 V	

Tab. 8: SDS 5000 electrical data, size 0

Nominal currents up to +45 °C (in the control cabinet)

Operation with asynchronous motor

Electrical data	SDS 5007A	SDS 5008A	SDS 5015A
$I_{2N,PU}$	3 × 4 A	3 × 2.3 A	3 × 4.5 A
I_{2maxPU}	180% for 5 s; 150% for 30 s		
$f_{PWM,PU}$	4 kHz[2]		

Tab. 9: SDS 5000 electrical data, size 0, for 4 kHz clock frequency

Operation with synchronous servo motor

Electrical data	SDS 5007A	SDS 5008A	SDS 5015A
$I_{2N,PU}$	3 × 3 A	3 × 1.7 A	3 × 3.4 A
I_{2maxPU}	250% for 2 s; 200% for 5 s		
$f_{PWM,PU}$	8 kHz[3]		

Tab. 10: SDS 5000 electrical data, size 0, for 8 kHz clock frequency

Electrical data	SDS 5007A	SDS 5008A	SDS 5015A
U_{onCH}	400 – 420 V	780 – 800 V	
U_{offCH}	360 – 380 V	740 – 760 V	
R_{2minRB}	100 Ω	100 Ω	
P_{maxRB}	1.8 kW	6.4 kW	

Tab. 11: Brake chopper electrical data, size 0

9.2.4.2 Size 1: SDS 5040A to SDS 5075A

Electrical data	SDS 5040A	SDS 5075A
ID No.	55431	55432
Recommended motor rating	4.0 kW	7.5 kW
U_{1PU}	3 × 400 V, +32% / −50%, 50 Hz; 3 × 480 V, +10% / −58%, 60 Hz	
$I_{1N,PU}$	3 × 9.3 A	3 × 15.8 A
f_{2PU}	0 – 700 Hz	
U_{2PU}	0 – 400 V	
U_{maxPU}	830 V	

Tab. 12: SDS 5000 electrical data, size 1

[2] Clock frequency adjustable from 4 to 16 kHz (see the chapter on derating)

[3] Clock frequency adjustable from 4 to 16 kHz (see the chapter on derating)

Nominal currents up to +45 °C (in the control cabinet)

Operation with asynchronous motor

Electrical data	SDS 5040A	SDS 5075A
$I_{2N,PU}$	3 × 10 A	3 × 16 A
I_{2maxPU}	180% for 5 s; 150% for 30 s	
$f_{PWM,PU}$	4 kHz[4]	

Tab. 13: SDS 5000 electrical data, size 1, for 4 kHz clock frequency

Operation with synchronous servo motor

Electrical data	SDS 5040A	SDS 5075A
$I_{2N,PU}$	3 × 6 A	3 × 10 A
I_{2maxPU}	250% for 2 s; 200% for 5 s	
$f_{PWM,PU}$	8 kHz[5]	

Tab. 14: SDS 5000 electrical data, size 1, for 8 kHz clock frequency

Electrical data	SDS 5040A	SDS 5075A
U_{onCH}	780 – 800 V	
U_{offCH}	740 – 760 V	
R_{2minRB}	47 Ω	47 Ω
P_{maxRB}	13.6 kW	13.6 kW

Tab. 15: Brake chopper electrical data, size 1

9.2.4.3 Size 2: SDS 5110A to SDS 5150A

Electrical data	SDS 5110A	SDS 5150A
ID No.	55433	55434
Recommended motor rating	11 kW	15 kW
U_{1PU}	3 × 400 V, +32% / −50%, 50 Hz; 3 × 480 V, +10% / −58%, 60 Hz	
$I_{1N,PU}$	3 × 24.5 A	3 × 32.6 A
f_{2PU}	0 – 700 Hz	
U_{2PU}	0 – 400 V	
U_{maxPU}	830 V	

Tab. 16: SDS 5000 electrical data, size 2

Nominal currents up to +45 °C (in the control cabinet)

Operation with asynchronous motor

Electrical data	SDS 5110A	SDS 5150A
$I_{2N,PU}$	3 × 22 A	3 × 32 A
I_{2maxPU}	180% for 5 s; 150% for 30 s	
$f_{PWM,PU}$	4 kHz[6]	

Tab. 17: SDS 5000 electrical data, size 2, for 4 kHz clock frequency

Operation with synchronous servo motor

Electrical data	SDS 5110A	SDS 5150A
$I_{2N,PU}$	3 × 14 A	3 × 20 A
I_{2maxPU}	250% for 2 s; 200% for 5 s	
$f_{PWM,PU}$	8 kHz[7]	

Tab. 18: SDS 5000 electrical data, size 2, for 8 kHz clock frequency

[4] Clock frequency adjustable from 4 to 16 kHz (see the chapter on derating)
[5] Clock frequency adjustable from 4 to 16 kHz (see the chapter on derating)
[6] Clock frequency adjustable from 4 to 16 kHz (see the chapter on derating)
[7] Clock frequency adjustable from 4 to 16 kHz (see the chapter on derating)

Electrical data	SDS 5110A	SDS 5150A
U_{onCH}	780 – 800 V	
U_{offCH}	740 – 760 V	
R_{2minRB}	22 Ω	
P_{maxRB}	29.1 kW	

Tab. 19: Brake chopper electrical data, size 2

9.2.4.4 Size 3: SDS 5220A to SDS 5450A

Electrical data	SDS 5220A	SDS 5370A	SDS 5450A
ID No.	55435	55436	55437
Recommended motor rating	22 kW	37 kW	45 kW
U_{1PU}	3 × 400 V, +32% / −50%, 50 Hz; 3 × 480 V, +10% / −58%, 60 Hz		
$I_{1N,PU}$	1 × 37 A	3 × 62 A	3 × 76 A
f_{2PU}	0 – 700 Hz		
U_{2PU}	0 – 400 V		
U_{maxPU}	830 V		

Tab. 20: SDS 5000 electrical data, size 3

Nominal currents up to +45 °C (in the control cabinet)

Operation with asynchronous motor

Electrical data	SDS 5220A	SDS 5370A	SDS 5450A
$I_{2N,PU}$	3 × 44 A	3 × 70 A	3 × 85 A
I_{2maxPU}	180% for 5 s; 150% for 30 s		
$f_{PWM,PU}$	4 kHz[8]		

Tab. 21: SDS 5000 electrical data, size 3, for 4 kHz clock frequency

Operation with synchronous servo motor

Electrical data	SDS 5220A	SDS 5370A	SDS 5450A
$I_{2N,PU}$	3 × 30 A	3 × 50 A	3 × 60 A
I_{2maxPU}	250% for 2 s; 200% for 5 s		
$f_{PWM,PU}$	8 kHz[9]		

Tab. 22: SDS 5000 electrical data, size 3, for 8 kHz clock frequency

Electrical data	SDS 5220A	SDS 5370A	SDS 5450A
U_{onCH}	780 – 800 V		
U_{offCH}	740 – 760 V		
R_{intRB}	30 Ω (PTC resistance; 100 W; max. 1 kW for 1 s; τ = 40 s)		
R_{2minRB}	15 Ω		
P_{maxRB}	42 kW		

Tab. 23: Brake chopper electrical data, size 3

[8] Clock frequency adjustable from 4 to 16 kHz (see the chapter on derating)

[9] Clock frequency adjustable from 4 to 16 kHz (see the chapter on derating)

9.2.4.5 Power loss data in accordance with EN 61800-9-2

Type	Nominal current $I_{2N,PU}$	Apparent power	Absolute losses $P_{V,CU}$[10]	Operating points[11]								IE class[12]
				(0/25)	(0/50)	(0/100)	(50/25)	(50/50)	(50/100)	(90/50)	(90/100)	
				Relative losses								
	[A]	[kVA]	[W]	[%]								
SDS 5007A	4	0.9	10	5.01	5.07	5.68	5.20	5.37	6.30	5.88	7.43	IE2
SDS 5008A	2.3	1.6	10	2.98	3.13	3.49	3.02	3.22	3.71	3.36	4.09	IE2
SDS 5015A	4.5	3.1	12	1.71	1.86	2.24	1.75	1.97	2.51	2.16	3.04	IE2
SDS 5040A	10	6.9	12	1.38	1.54	1.93	1.43	1.64	2.17	1.80	2.57	IE2
SDS 5075A	16	11.1	12	0.95	1.12	1.66	0.99	1.23	1.98	1.41	2.52	IE2
SDS 5110A	22	15.2	15	0.80	0.97	1.49	0.84	1.06	1.75	1.21	2.19	IE2
SDS 5150A	32	22.2	15	0.70	0.87	1.40	0.74	0.97	1.66	1.11	2.08	IE2
SDS 5220A	44	30.5	35	0.61	0.76	1.21	0.68	0.90	1.53	1.06	1.96	IE2
SDS 5370A	70	48.5	35	0.53	0.69	1.18	0.59	0.82	1.49	0.97	1.89	IE2
SDS 5450A	85	58.9	35	0.47	0.64	1.18	0.54	0.78	1.50	0.94	1.94	IE2

Tab. 24: Relative losses of inverter SDS 5000 according to EN 61800-9-2

[10] Absolute losses for a power unit that is switched off

[11] Operating points for relative motor stator frequency in % and relative torque current in %

[12] IE class in accordance with EN 61800-9-2

Type	Nominal current $I_{2N,PU}$	Apparent power	Absolute losses $P_{V,CU}$[13]	Operating points[14]								IE class[15]	Comparison[16]
				(0/25)	(0/50)	(0/100)	(50/25)	(50/50)	(50/100)	(90/50)	(90/100)		
				Absolute losses P_V									
	[A]	[kVA]	[W]	[W]									[%]
SDS 5007A	4	0.9	10	45.1	45.6	51.1	46.8	48.3	56.7	52.9	66.9	IE2	51.8
SDS 5008A	2.3	1.6	10	47.7	50.1	55.8	48.3	51.5	59.3	53.8	65.4	IE2	40.2
SDS 5015A	4.5	3.1	12	52.9	57.6	69.3	54.4	61.0	77.9	67.1	94.1	IE2	39.6
SDS 5040A	10	6.9	12	95.3	106.1	133.3	98.6	113.2	149.9	123.9	177.0	IE2	37.1
SDS 5075A	16	11.1	12	104.9	124.0	184.6	110.3	136.6	219.8	156.0	279.8	IE2	35.8
SDS 5110A	22	15.2	15	121.5	146.9	226.1	128.1	161.6	266.0	183.7	332.7	IE2	32.9
SDS 5150A	32	22.2	15	154.7	192.8	311.3	164.6	214.6	369.3	245.9	462.1	IE2	38.3
SDS 5220A	44	30.5	35	187.5	232.2	368.7	207.7	273.9	466.8	323.0	597.8	IE2	32.1
SDS 5370A	70	48.5	35	256.6	332.3	570.8	287.9	397.0	721.5	471.0	915.9	IE2	33.9
SDS 5450A	85	58.9	35	277.8	376.9	692.3	317.4	459.0	886.1	554.6	1143.1	IE2	35.3

Tab. 25: Power loss data of SDS 5000 inverter in accordance with EN 61800-9-2

General conditions

The loss data applies to inverters without accessories.

The power loss calculation is based on a three-phase supply voltage with 400 V_{AC}/50 Hz.

The calculated data includes a supplement of 10% in accordance with EN 61800-9-2.

The power loss specifications refer to a clock frequency of 4 kHz.

The absolute losses for a power unit that is switched off refer to the 24 V_{DC} power supply of the control electronics.

[13] Absolute losses for a power unit that is switched off

[14] Operating points for relative motor stator frequency in % and relative torque current in %

[15] IE class in accordance with EN 61800-9-2

[16] Comparison of the losses for the reference inverter related to IE2 in the nominal point (90, 100)

9.2.4.6 Power loss data of accessories

If the inverter needs to be ordered with accessory parts, the losses increase as follows:

Type	Absolute losses P_V [W]
ASP 5001 safety module	1
SEA 5001 terminal module	< 2
XEA 5001 terminal module	< 5
REA 5001 terminal module	< 5
CAN 5000 communication module	1
DP 5000 communication module	< 2
ECS 5000 communication module	< 2
PN 5000 communication module	< 4
BRM 5000 / BRS 5001 brake module	< 1

Tab. 26: Absolute losses in the accessories

Information

Note the absolute power loss of the encoder (usually < 3 W) and of the brake when designing as well.

Loss specifications for other optional accessories can be found in the technical data of the respective accessory part.

9.2.5 Derating by increasing the clock frequency

Depending on the clock frequency $f_{PWM,PU}$, the following values for nominal output currents $I_{2N,PU}$ arise.

Type	$I_{2N,PU}$ 4 kHz	$I_{2N,PU}$ 8 kHz	$I_{2N,PU}$ 16 kHz
SDS 5007A	4 A	3 A	2 A
SDS 5008A	2.3 A	1.7 A	1.2 A
SDS 5015A	4.5 A	3.4 A	2.2 A
SDS 5040A	10 A	6 A	3.3 A
SDS 5075A	16 A	10 A	5.7 A
SDS 5110A	22 A	14 A	8.1 A
SDS 5150A	32 A	20 A	11.4 A
SDS 5220A	44 A	30 A	18.3 A
SDS 5370A	70 A	50 A	31.8 A
SDS 5450A	85 A	60 A	37.8 A

Tab. 27: Nominal output current $I_{2N,PU}$ dependent on the clock frequency

9.2.6 Dimensions

The dimensions of the available SDS 5000 sizes can be found in the following chapters.

9.2.6.1 Dimensions: sizes 0 to 2

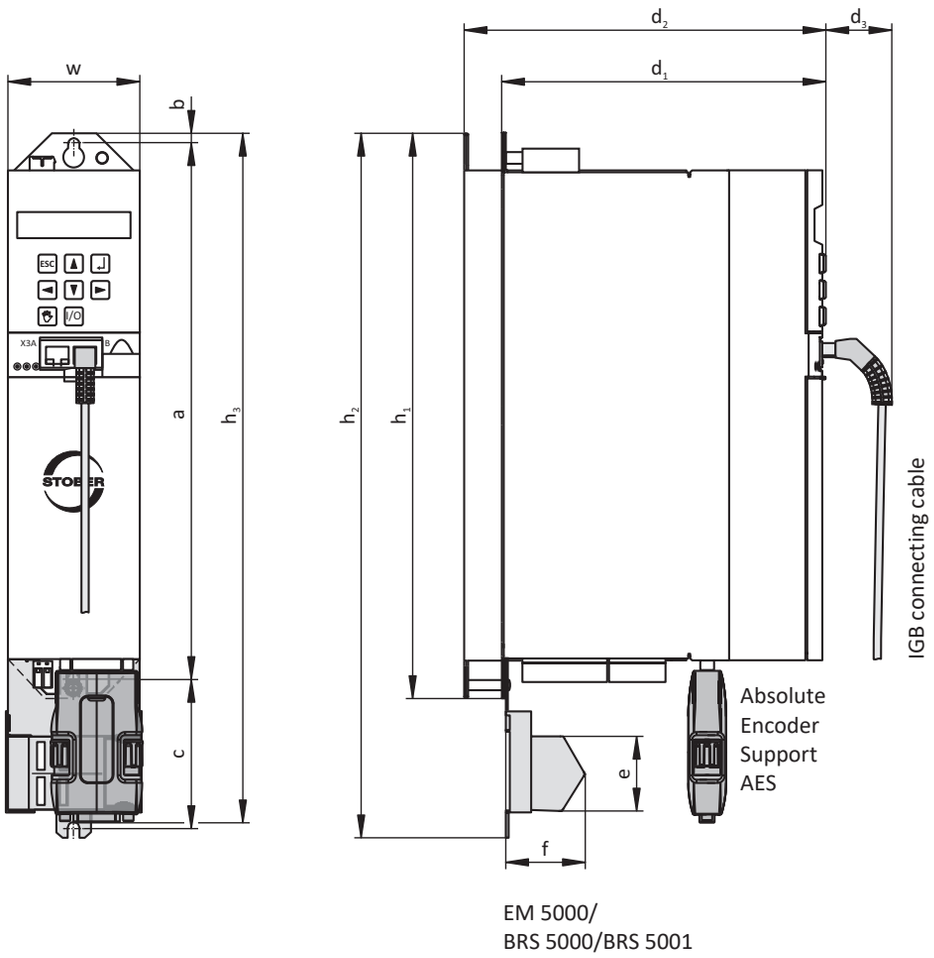

Fig. 1: SDS 5000 dimensional drawing, sizes 0 to 2

Dimensions [mm]			Size 0	Size 1	Size 2
Inverter	Height	h_1	300		
		h_2	360[17] / 373[18]		
		h_3[19]	365		
	Width	w	70		105
	Depth	d_1	175	260	260
		d_2[20]	193	278	278
		d_3	40		
EMC shroud	Height	e	37.5[21] / 44[22]		
	Depth	f	40		
Fastening holes	Vertical distance to the upper edge	b	6		
	Vertical distance	a	283+2		
	Vertical distance	c[23]	79		

Tab. 28: SDS 5000 dimensions, sizes 0 to 2 [mm]

[17] h2 = height incl. EMC shroud EM 5000
[18] h2 = height incl. brake module BRS 5001
[19] h3 = Height incl. AES
[20] d2 = Depth including RB 5000 brake resistor
[21] e = height of EM 5000 EMC shroud
[22] e = height of BRS 5001 brake module
[23] c = vertical distance with BRS 5001 brake module

9.2.6.2 Dimensions: size 3

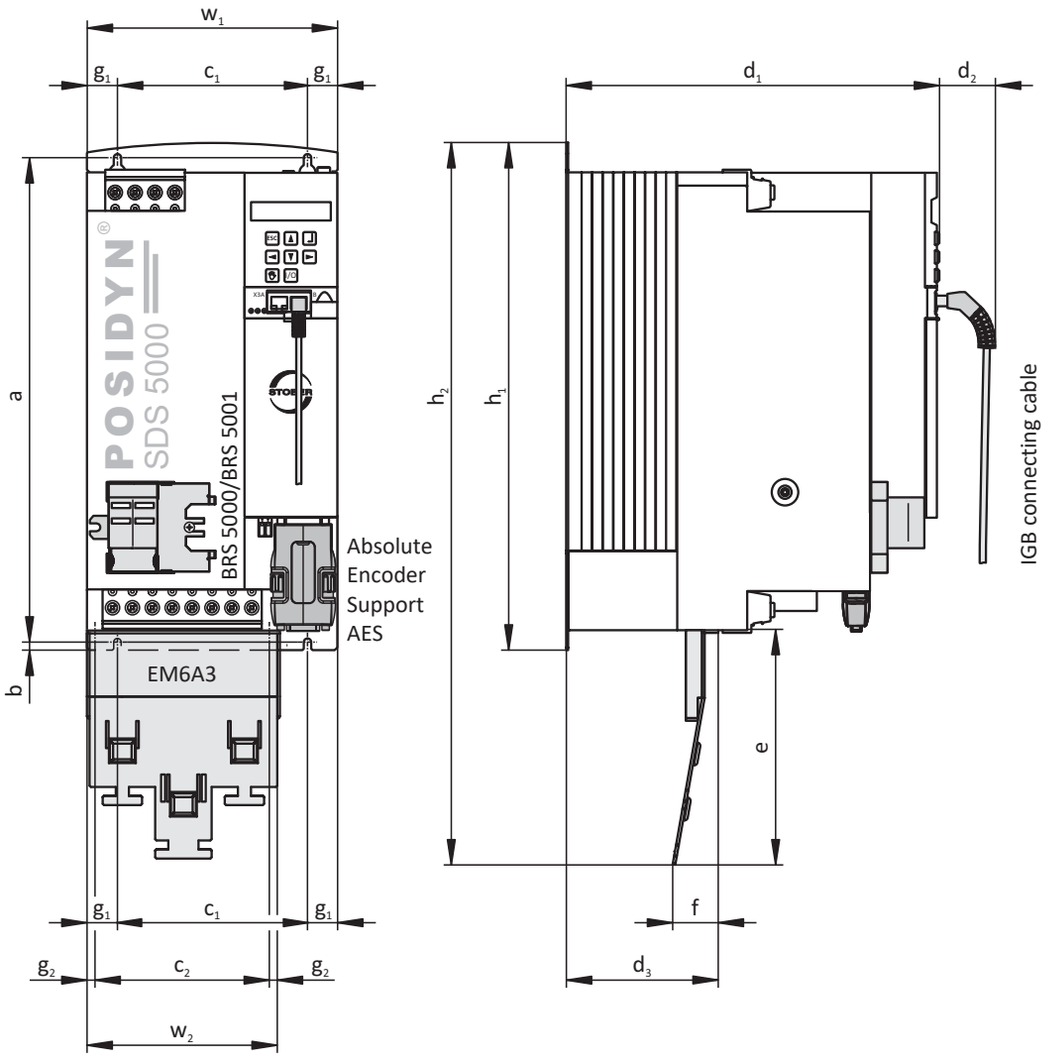

Fig. 2: SDS 5000 dimensional drawing, size 3

Dimensions [mm]			Size 3
Inverter	Height	h_1	382.5
		h_2[24]	540
	Width	w_1	194
	Depth	d_1	276
		d_2	40
EMC shroud	Height	e	174
	Width	w_2	147
	Depth	f	34
	Depth	d_3	113
Fastening holes	Vertical distance	a	365+2
	Vertical distance to the bottom edge	b	6
	Horizontal distance	c_1[25]	150+0.2/−0.2
	Horizontal distance to the side edge	g_1[26]	20
	Horizontal distance	c_2[27]	132
	Horizontal distance to the side edge	g_2[28]	7.5

Tab. 29: SDS 5000 dimensions, size 3 [mm]

[24] h2 = Height incl. EM6A3 EMC shroud

[25] c1 = Horizontal distance to the fastening holes of the inverter

[26] g1 = Horizontal distance to the side edge of the inverter

[27] c2 = Horizontal distance to the fastening holes of the EM6A3 EMC shroud

[28] g2 = Horizontal distance to the side edge of the EM6A3 EMC shroud

9.2.7 Minimum clearances

The specified dimensions refer to the outside edges of the inverter.

Minimum clearance	Above	Below	On the side
Size 0 – Size 2	100	100	5
... with EMC shroud or brake module	100	120	5
Size 3	100	100	5
... with EMC shroud	100	220	5

Tab. 30: Minimum clearances [mm]

9.3 Inverter/motor combinations

Parameterization of a STOBER inverter is exceptionally easy, especially together with four-pole STOBER asynchronous motors. The motor is fully typified by inputting just the motor size (e.g. 90L) and its wiring (star or delta). A delta connection (measurement point 230 V, 50 Hz) is available for motors up to 3 kW (size 100). By increasing the voltage at higher frequencies, the full torque can be drawn through the motor up to 87 Hz. It usually makes sense to take this expanded speed adjustment range into account when selecting the gear unit. You can find more detailed information in the chapter [▸ 5.6].

An explanation of the formula symbols used can be found in the chapter [▸ 13.1].

									SDS 5008A	SDS 5015A	SDS 5040A	SDS 5075A	SDS 5110A	SDS 5150A	SDS 5220A	SDS 5370A	SDS 5450A
									$I_{2N,PU}$ [A] ($f_{PWM,PU}$ = 4 kHz)								
	f_T [Hz]	pz	Con-nec-tion	P_N [kW]	n_N [rpm]	M_N [Nm]	M_k/M_N	I_N [A]	2.3	4.5	10	16	22	32	44	70	85
Δ 230 V / Y 400 V motor winding									**$I_{2N,PU}$ / I_N**								
IE3D080L04	50	4	Y	0.75	1445	5.0	3.7	1.7	1.4								
IE3D080L04	87	4	Δ	1.3	2503	5.0	3.7	2.94		1.5							
IE3D090S04	50	4	Y	1.1	1440	7.3	3.7	2.5		1.8							
IE3D090S04	87	4	Δ	1.91	2494	7.3	3.7	4.33		1.0							
IE3D090LX04	50	4	Y	1.5	1445	9.8	4.9	3.4		1.3							
IE3D090LX04	87	4	Δ	2.6	2503	9.8	4.9	5.89			1.7						
IE3D100KX04	50	4	Y	2.2	1450	14.5	3.8	4.55			2.2						
IE3D100KX04	87	4	Δ	3.81	2511	14.5	3.8	7.88			1.3	2.0					
IE3D100LX04	50	4	Y	3.0	1450	19.8	4	6.35			1.6						
IE3D100LX04	87	4	Δ	5.2	2511	19.8	4	11				1.5	2.0				
IE3D112M04	50	4	Δ	4.0	1465	26.1	4.5	7.9			1.3	2.0					
IE3D132S04	50	4	Δ	5.5	1480	35	5.4	12				1.3	1.8				
IE3D132M04	50	4	Δ	7.5	1475	49	3.9	14.5				1.1	1.5				
IE3D160M4	50	4	Δ	11	1475	71	3.2	21					1.0	1.5	2.1		
IE3D160L04	50	4	Δ	15	1490	96	3.9	28						1.1	1.6		
IE3D180M04	50	4	Δ	18.5	1475	120	3.0	34.5							1.3	2.0	
IE3D180L04	50	4	Δ	22	1480	142	3.2	40.5							1.1	1.7	2.1
IE3D200L04	50	4	Δ	30	1485	193	2.6	54.5								1.3	1.6
IE3D225S04	50	4	Δ	37	1490	237	2.7	67								1.0	1.3
IE3D225M04	50	4	Δ	45	1482	290	2.6	84									1.0

9.4 Accessories

You can find information about the available accessories in the following chapters.

9.4.1 Safety technology

ASP 5001 – Safe Torque Off

Available with the standard design.

Option module for implementation of integrated safety function Safe Torque Off (STO).
The ASP 5001 may only be installed by STÖBER Antriebstechnik GmbH + Co. KG!
The ASP 5001 must be ordered with the basic device.

9.4.2 Communication

IGB connecting cable

Cable for connecting the interface X3A or X3B on the inverter front for IGB, CAT5e, magenta, connector angled at 45°.
The following versions are available:
ID No. 49855: 0.4 m.
ID No. 49856: 2 m.

PC connecting cables

ID No. 49857
Cable for connecting the X3A or X3B interface with the PC, CAT5e, blue, 5 m.

USB 2.0 Ethernet adapter

ID No. 49940
Adapter for connecting Ethernet to a USB port.

CANopen DS-301 CAN 5000 communication module

ID No. 44574
Accessory part for connecting CAN bus.

PROFIBUS DP-V1 DP 5000 communication module

ID No. 44575
Accessory module for connecting PROFIBUS DP-V1.

EtherCAT ECS 5000 communication module

ID No. 49014
Accessory part for connecting EtherCAT (CANopen over EtherCAT).

EtherCAT cables

Ethernet patch cable, CAT5e, yellow.
The following designs are available:
ID No. 49313: Length approx. 0.2 m.
ID No. 49314: Length approx. 0.35 m.

PROFINET PN 5000 communication module

ID No. 53893
Accessory part for connecting PROFINET.

9.4.3 Terminal module

SEA 5001 standard terminal module

ID No. 49576
Terminals:

- 2 analog inputs
- 2 analog outputs
- 5 binary inputs
- 2 binary outputs

XEA 5001 extended terminal module

ID No. 49015
Terminals:

- 3 analog inputs
- 2 analog outputs
- 13 binary inputs
- 10 binary outputs

Encoder / interfaces:

- TTL incremental encoder (simulation and evaluation)
- Pulse train (simulation and evaluation)
- SSI encoder (simulation and evaluation)

X120 SSI/TTL connection cable

ID No. 49482
Cable for connecting the X120 TTL interface on the SD6 drive controller (on terminal module RI6 or XI6) with the X301 interface on the LA6 adapter box in order to transfer Hall sensor signals. 0.3 m.

REA 5001 resolver terminal module

ID No. 49854
Terminals:

- 2 analog inputs
- 2 analog outputs
- 5 binary inputs
- 2 binary outputs

Encoder / interfaces:

- Resolver
- EnDat 2.1 sin/cos encoders
- TTL incremental encoder (simulation and evaluation)
- SSI encoder (simulation and evaluation)
- Pulse train (simulation and evaluation)

Resolver cables that were connected to an POSIDYN SDS 4000 can be connected using the resolver adapter (9-pole to 15-pole) included in the scope of delivery to terminal X140 of REA 5001.

9.4.4 Braking resistor

In addition to the inverters, STOBER offers braking resistors in different sizes and performance classes described below. For the selection, note the minimum permitted braking resistances specified in the technical data of the individual inverter types.

9.4.4.1 FZMU, FZZMU tubular fixed resistor

Type	FZMU 400×65			FZZMU 400×65		
ID No.	49010	55445	55446	53895	55447	55448
SDS 5007A	X	—	—	—	—	—
SDS 5008A	X	—	—	—	—	—
SDS 5015A	X	—	—	—	—	—
SDS 5040A	(X)	—	—	X	—	—
SDS 5075A	(X)	—	—	X	—	—
SDS 5110A	(—)	X	—	(X)	X	—
SDS 5150A	(—)	X	—	(X)	X	—
SDS 5220A	(—)	(X)	X	(—)	(X)	X
SDS 5370A	(—)	(X)	X	(—)	(X)	X
SDS 5450A	(—)	(X)	X	(—)	(X)	X

Tab. 31: Assignment of FZMU, FZZMU braking resistor – SDS 5000 inverter

X	Recommended
(X)	Possible
(—)	Useful under certain conditions
—	Not possible

Properties

Specification	FZMU 400×65			FZZMU 400×65		
ID No.	49010	55445	55446	53895	55447	55448
Type	Tubular fixed resistor			Tubular fixed resistor		
Resistance [Ω]	100	22	15	47	22	15
Power [W]	600			1200		
Therm. time const. τ_{th} [s]	40			40		
Pulse power for < 1 s [kW]	18			36		
U_{max} [V]	848			848		
Weight [kg]	Approx. 2.2			Approx. 4.2		
Protection class	IP20			IP20		
Test symbols						

Tab. 32: FZMU, FZZMU specification

Dimensions

Dimension	FZMU 400×65			FZZMU 400×65		
ID No.	49010	55445	55446	53895	55447	55448
L x D	400 × 65			400 × 65		
H	120			120		
K	6.5 × 12			6.5 × 12		
M	430			426		
O	485			450		
R	92			185		
U	64			150		
X	10			10		

Tab. 33: FZMU, FZZMU dimensions [mm]

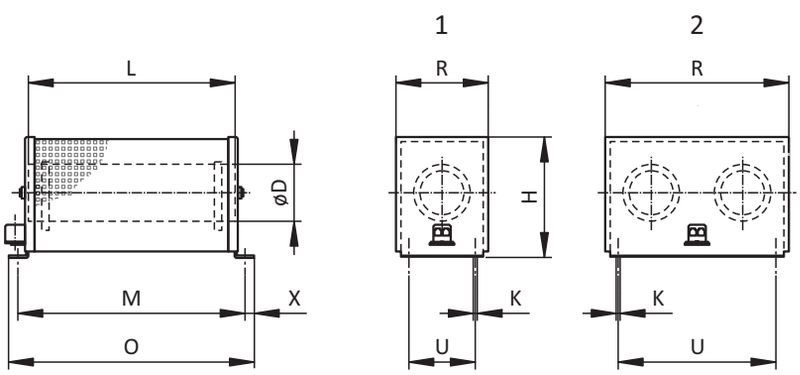

Fig. 3: FZMU (1), FZZMU (2) dimensional drawing

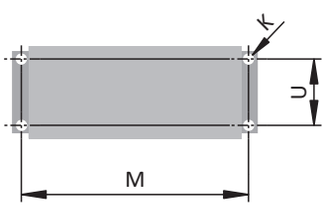

Fig. 4: FZMU, FZZMU drilling diagram

9.4.4.2 GVADU, GBADU flat resistor

Type	GVADU 210×20	GBADU 265×30	GBADU 405×30	GBADU 335×30	GBADU 265×30
ID No.	55441	55442	55499	55443	55444
SDS 5007A	X	X	X	—	—
SDS 5008A	X	X	X	—	—
SDS 5015A	X	X	X	—	—
SDS 5040A	(X)	(X)	(X)	X	—
SDS 5075A	(X)	(X)	(X)	X	—
SDS 5110A	(—)	(—)	(—)	(X)	X
SDS 5150A	(—)	(—)	(—)	(X)	X
SDS 5220A	(—)	(—)	(—)	(—)	(X)
SDS 5370A	(—)	(—)	(—)	(—)	(X)
SDS 5450A	(—)	(—)	(—)	(—)	(X)

Tab. 34: Assignment of GVADU, GBADU braking resistor – SDS 5000 inverters

X	Recommended
(X)	Possible
(—)	Useful under certain conditions
—	Not possible

Properties

Specification	GVADU 210×20	GBADU 265×30	GBADU 405×30	GBADU 335×30	GBADU 265×30
ID No.	55441	55442	55499	55443	55444
Type	Flat resistor	Flat resistor	Flat resistor	Flat resistor	Flat resistor
Resistance [Ω]	100	100	100	47	22
Power [W]	150	300	500	400	300
Therm. time const. τ_{th} [s]	60	60	60	60	60
Pulse power for < 1 s [kW]	3.3	6.6	11	8.8	6.6
U_{max} [V]	848	848	848	848	848
Cable design	Radox	FEP	FEP	FEP	FEP
Cable length [mm]	500	500	500	500	500
Conductor cross-section [AWG]	18/19 (0.82 mm²)	14/19 (1.9 mm²)	14/19 (1.9 mm²)	14/19 (1.9 mm²)	14/19 (1.9 mm²)
Weight [g]	300	950	1450	1200	950
Protection class	IP54	IP54	IP54	IP54	IP54
Test symbols	c UL us CE	c UL us CE	c UL us CE	c UL us CE	c UL us CE

Tab. 35: GVADU, GBADU specification

Dimensions

Dimension	GVADU 210×20	GBADU 265×30	GBADU 405×30	GBADU 335×30	GBADU 265×30
ID No.	55441	55442	55499	55443	55444
A	210	265	405	335	265
H	192	246	386	316	246
C	20	30	30	30	30
D	40	60	60	60	60
E	18.2	28.8	28.8	28.8	28.8
F	6.2	10.8	10.8	10.8	10.8
G	2	3	3	3	3
K	2.5	4	4	4	4
J	4.3	5.3	5.3	5.3	5.3
β	65°	73°	73°	73°	73°

Tab. 36: GVADU, GBADU dimensions [mm]

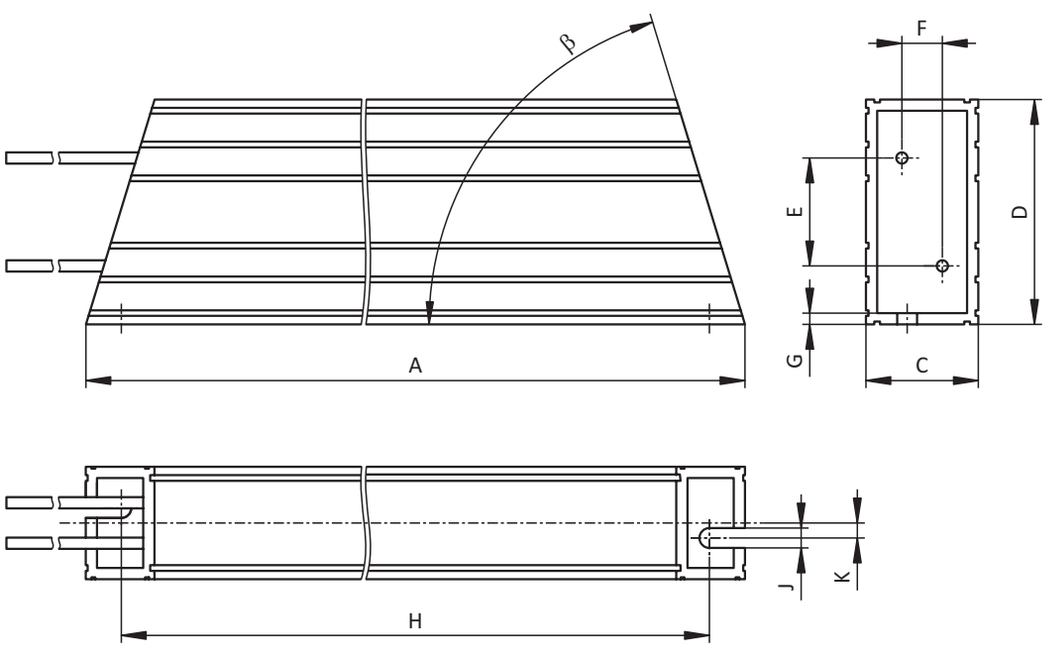

Fig. 5: GVADU, GBADU dimensional drawing

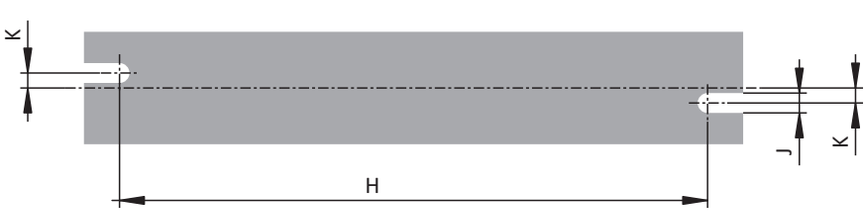

Fig. 6: GVADU, GBADU drilling diagram

9.4.4.3 FGFKU steel-grid fixed resistor

Type	FGFKU			
ID No.	55449	55450	55451	53897
SDS 5110A	X	—	—	—
SDS 5150A	X	—	—	—
SDS 5220A	(X)	X	X	X
SDS 5370A	(X)	X	X	X
SDS 5450A	(X)	X	X	X

Tab. 37: Assignment of FGFKU braking resistor – SDS 5000 inverter

X	Recommended
(X)	Possible
—	Not possible

Properties

Specification	FGFKU			
ID No.	55449	55450	55451	53897
Type	Steel-grid fixed resistor			
Resistance [Ω]	22	15	15	15
Power [W]	2500	2500	6000	8000
Therm. time const. τ_{th} [s]	30	30	20	20
Pulse power for < 1 s [kW]	50	50	120	160
U_{max} [V]	848	848	848	848
Weight [kg]	Approx. 7.5	Approx. 7.5	12	18
Protection class	IP20	IP20	IP20	IP20
Test symbols				

Tab. 38: FGFKU specification

Dimensions

Dimension	FGFKU			
ID No.	55449	55450	55451	53897
A	270	270	370	570
B	295	295	395	595
C	355	355	455	655

Tab. 39: FGFKU dimensions [mm]

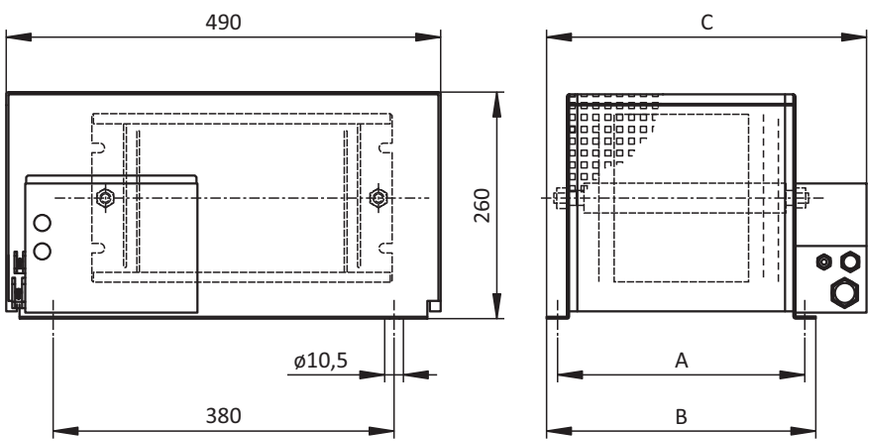

Fig. 7: FGFKU dimensional drawing

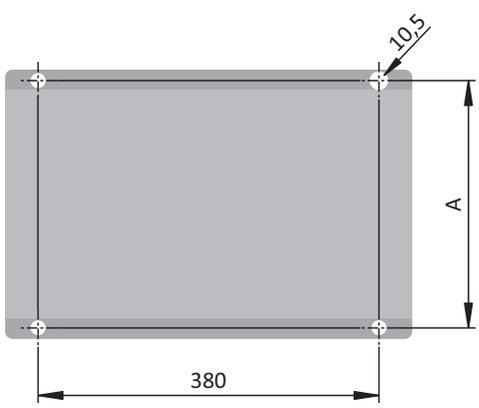

Fig. 8: FGFKU drilling diagram

9.4.4.4 RB 5000 rear section braking resistor

Type	RB 5022	RB 5047	RB 5100
ID No.	45618	44966	44965
SDS 5007A	—	—	X
SDS 5008A	—	—	X
SDS 5015A	—	—	X
SDS 5040A	—	X	(X)
SDS 5075A	—	X	(X)
SDS 5110A	X	—	—
SDS 5150A	X	—	—

Tab. 40: Assignment of RB 5000 braking resistor – SDS 5000 inverter

X	Recommended
(X)	Possible
—	Not possible

Properties

Specification	RB 5022	RB 5047	RB 5100
ID No.	45618	44966	44965
Resistance [Ω]	22	47	100
Power [W]	100	60	60
Therm. time const. τ_{th} [s]	8	8	8
Pulse power for < 1 s [kW]	1.5	1.0	1.0
U_{max} [V]	800	800	800
Weight [g]	approx. 640	approx. 460	approx. 440
Cable design	Radox	Radox	Radox
Cable length [mm]	250	250	250
Conductor cross-section [AWG]	18/19 (0.82 mm²)	18/19 (0.82 mm²)	18/19 (0.82 mm²)
Maximum torque of M5 threaded bolts [Nm]	5	5	5
Protection class	IP40	IP40	IP40
Test symbols	c UL us CE	c UL us CE	c UL us CE

Tab. 41: RB 5000 specification

Dimensions

Dimension	RB 5022	RB 5047	RB 5100
ID No.	45618	44966	44965
Height	300	300	300
Width	94	62	62
Depth	18	18	18
Drilling diagram corresponds to size	Size 2	Size 1	Size 0 and Size 1

Tab. 42: RB 5000 dimensions [mm]

9.4.5 Choke

Technical specifications for suitable chokes can be found in the following chapters.

9.4.5.1 TEP output choke

Output chokes are required for connecting drive controllers of size 0 to 2 to synchronous servo motors or asynchronous motors from a cable length > 50 m in order to reduce interference pulses and protect the drive system.

Information

The following technical data only applies to a rotating magnetic field frequency of 200 Hz. For example, this rotating magnetic field frequency is achieved with a motor with 4 pole pairs and a nominal speed of 3000 rpm. Always observe the specified derating for higher rotating magnetic field frequencies. Also observe the relationship with the clock frequency.

Properties

Specification	TEP3720-0ES41	TEP3820-0CS41	TEP4020-0RS41
ID No.	53188	53189	53190
Voltage range	3 × 0 to 480 V_{AC}		
Frequency range	0 – 200 Hz		
Nominal current $I_{N,MF}$ at 4 kHz	4 A	17.5 A	38 A
Nominal current $I_{N,MF}$ at 8 kHz	3.3 A	15.2 A	30.4 A
Max. permitted motor cable length with output choke	100 m		
Max. surrounding temperature $\vartheta_{amb,max}$	40 °C		
Protection class	IP00		
Winding losses	11 W	29 W	61 W
Iron losses	25 W	16 W	33 W
Connection	Screw terminal		
Max. conductor cross-section	10 mm²		
UL Recognized Component (CAN; USA)	Yes		
Test symbols	c UL us CE		

Tab. 43: TEP specification

Project configuration

Select the output chokes in accordance with the nominal currents of the output chokes, motor and drive controller. In particular, observe the derating of the output choke for rotating magnetic field frequencies higher than 200 Hz. You can calculate the rotating magnetic field frequency for your drive with the following formula:

$$f_N = n_N \times \frac{p}{60}$$

Derating – Effect of the clock frequency

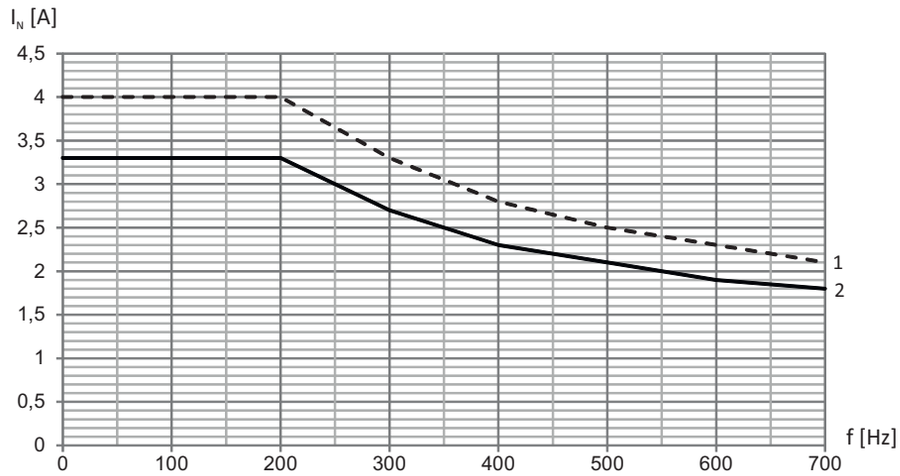

Fig. 9: Derating the nominal current depending on the clock frequency, TEP3720-0ES41

1 4 kHz clock frequency

2 8 kHz clock frequency

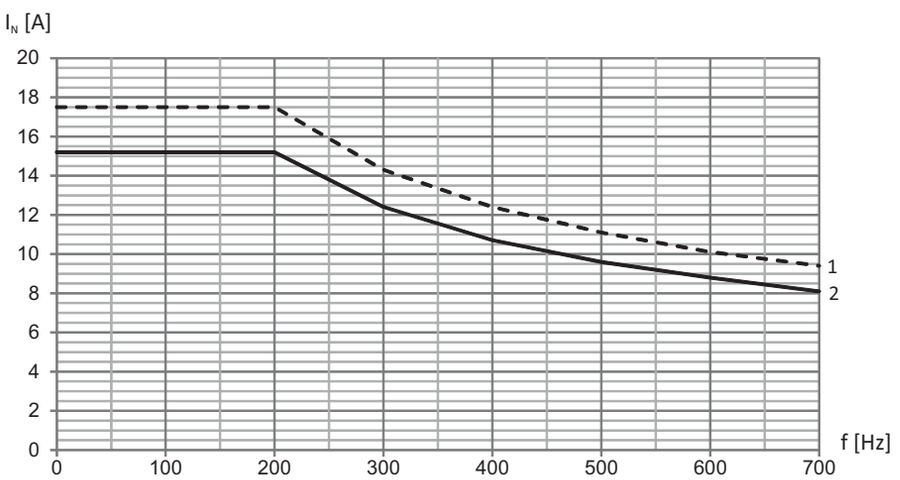

Fig. 10: Derating the nominal current depending on the clock frequency, TEP3820-0CS41

1 4 kHz clock frequency

2 8 kHz clock frequency

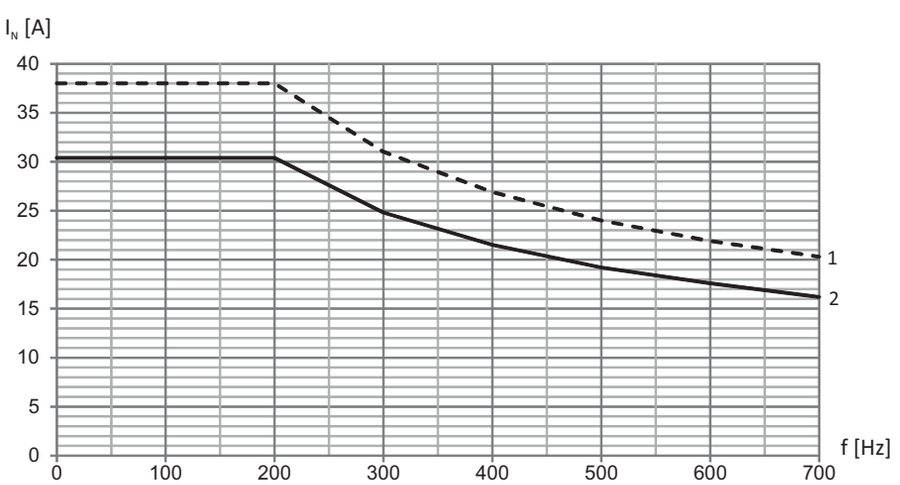

Fig. 11: Derating the nominal current depending on the clock frequency, TEP4020-0RS41

1 4 kHz clock frequency

2 8 kHz clock frequency

Derating – Effect of surrounding temperature

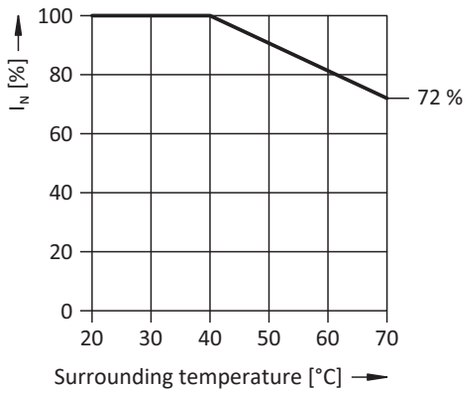

Fig. 12: Derating the nominal current based on surrounding temperature

Derating – Effect of the installation elevation

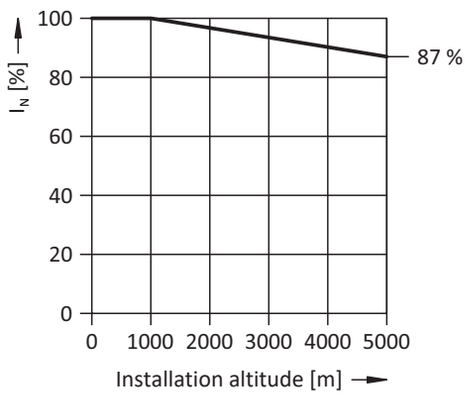

Fig. 13: Derating the nominal current depending on installation elevation

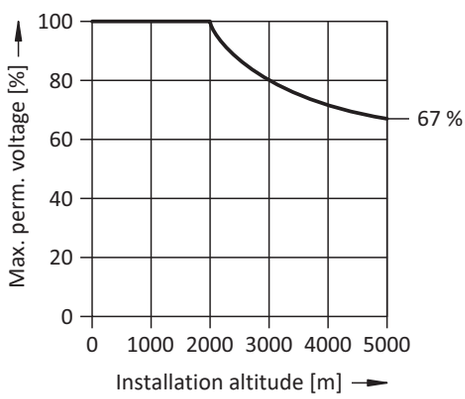

Fig. 14: Derating the voltage depending on installation elevation

Dimensions and weight

Dimension	TEP3720-0ES41	TEP3820-0CS41	TEP4020-0RS41
Height h [mm]	Max. 153	Max. 153	Max. 180
Width w [mm]	178	178	219
Depth d [mm]	73	88	119
Vertical distance – Fastening holes a1 [mm]	166	166	201
Vertical distance – Fastening holes a2 [mm]	113	113	136
Horizontal distance – Fastening holes b1 [mm]	53	68	89
Horizontal distance – Fastening holes b2 [mm]	49	64	76
Drill holes – Depth e [mm]	5.8	5.8	7
Drill holes – Width f [mm]	11	11	13
Screw connection – M	M5	M5	M6
Weight [g]	2900	5900	8800

Tab. 44: TEP dimensions and weight

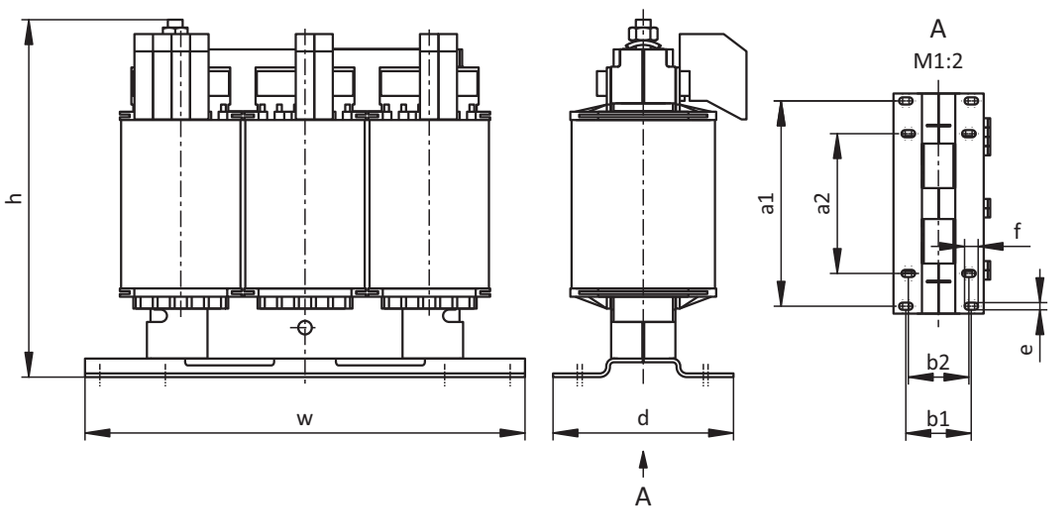

Fig. 15: TEP dimensional drawing

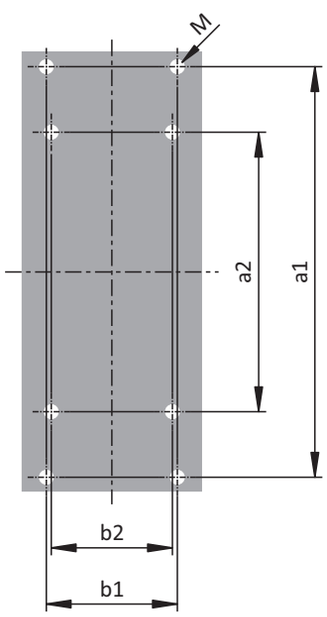

Fig. 16: TEP drilling diagram

9.4.6 Brake module and EMC shroud

BRS 5001 brake module

ID No. 56519
Brake module for inverters of the SDS 5000 series.
Accessory part for direct control of up to two brakes (24 V_{DC}) and (for inverters up to size 2) for connecting to the shield of the power cable.
Can be attached to the basic housing.
Including connection cable for basic device and shield connection terminal.

EM 5000 EMC shroud

ID No. 44959
EMC shroud for servo inverters of generation 5.
Accessory part for shield connection of the power cable for inverters up to size 2.
Can be attached to the basic housing.
Including shield connection terminal.

EMC shroud EM6A3

ID No. 135120
EMC shroud for drive controllers of the MDS 5000, SDS 5000 and SD6 series.
Accessory part for shield connection of the power cable for drive controllers up to size 3.
Can be attached to the basic housing.
Including shield connection terminal.
If necessary you can also connect the cable shield of the braking resistor and DC link connection to the shroud. Additional shield connection terminals are available as accessories for this purpose (ID No. 56521).

9.4.7 Removable data storage

Paramodul removable data storage

Included in the standard version.

ID No. 55464
Memory module for configuration and parameters.

9.5 Further information

9.5.1 Directives and standards

The following European directives and standards are relevant for inverters:

- Machinery Directive 2006/42/EC
- Low Voltage Directive 2014/35/EU
- EMC Directive 2014/30/EU
- EN 61326-3-1:2008
- EN 61800-3:2012-09 and 1:2014-02
- EN 61800-5-1:2008-04 and 1:2010-04
- EN 61800-5-2:2016-04
- EN 50178:1997

9.5.2 Symbols, marks and test symbols

Grounding symbol
Grounding symbol in accordance with IEC 60417, symbol 5019.

RoHS lead-free mark
Marking in accordance with RoHS directive 2011-65-EU.

CE mark
Manufacturer's self declaration: The product meets the requirements of EU directives.

UL test symbol
This product is listed by UL for the United States and Canada. Representative samples of this product have been evaluated by UL and meet the requirements of applicable standards.

UL recognized component mark
This component or material is recognized by UL. Representative samples of this product have been evaluated by UL and meet applicable requirements.

9.5.3 Additional documentation

Additional documentation related to the product can be found at http://www.stoeber.de/en/downloads/

Enter the ID of the documentation in the Search... field.

Documentation	ID
Configuration manual for POSIDYN SDS 5000 servo inverters	442277

10 POSIDRIVE FDS 5000 Frequency inverters

Table of contents

10.1 Overview 342

10.1.1 Features 343

10.1.2 Software components 343

10.1.3 Application training 344

10.2 Technical data 345

10.2.1 Type designation 345

10.2.2 Sizes 345

10.2.3 General technical data 346

10.2.4 Electrical data 347

10.2.5 Derating by increasing the clock frequency 349

10.2.6 Dimensions 350

10.2.7 Minimum clearances 350

10.3 Inverter/motor combinations 351

10.4 Accessories 352

10.4.1 Safety technology 352

10.4.2 Communication 352

10.4.3 Terminal module 353

10.4.4 Braking resistor 354

10.4.5 Choke 359

10.4.6 Brake module and EMC shroud 363

10.4.7 Control box 363

10.4.8 Removable data storage 363

10.5 Further information 364

10.5.1 Directives and standards 364

10.5.2 Symbols, marks and test symbols 364

10.5.3 Additional documentation 364

10 Frequency inverters

POSIDRIVE FDS 5000

10.1 Overview

The purpose-built asynchronous servo axis

Features

- Nominal output current up to 16 A
- 180% overload capacity
- Power range: 0.37 kW to 7.5 kW
- Control of rotating asynchronous motors
- Interface for incremental encoder (HTL/TTL)
- Communication using PROFIBUS DP, PROFINET, CANopen or EtherCAT
- Safe Torque Off (STO) and Safe Stop 1 (SS1) safety functions: SIL 3, PL e (cat. 3)
- Digital and analog inputs and outputs
- Brake chopper and line filter
- Convenient operating unit consisting of plain-text display and buttons
- Paramodul removable data storage for quick commissioning and service

10.1.1 Features

The FDS 5000 series is a purely digital, modular inverter system for operating rotational asynchronous motors with product types for direct operation on single-phase or three-phase network in a voltage range from 200 V_{AC} to 528 V_{AC}. An EMC line filter is integrated. An incremental encoder interface (HTL/TTL) is available by default. The ASP 5001 safety module makes it possible to implement the Safe Torque Off (STO) and Safe Stop 1 (SS1) safety functions in accordance with DIN EN ISO 13849-1 and DIN EN 61800-5-2 for safety-relevant applications. Communication modules provide the connection to a controller over the PROFIBUS DP, PROFINET, CANopen or EtherCAT fieldbus. Plain-text display and buttons simplify diagnostics in the event of faults and enable quick access to parameters. The Paramodul removable data storage can be used to transfer all application-relevant data from one inverter to another.

The vector control, sensorless vector control and U/f controller control modes are available for use with asynchronous motors.

POSIDRIVE FDS 5000

Paramodul removable data storage

Removable data storage for fast series commissioning by copying and easy service when replacing devices.

POSITool

The 5th generation of POSITool project configuration and commissioning software has all the functions needed for efficient use of inverters in single and multi-axis applications.

10.1.2 Software components

Modular application software

Various standard applications can be loaded onto the devices of the 5th STOBER inverter generation with the POSITool commissioning software as needed. Furthermore, programming based on IEC 61131-3 with CFC can be used to create new applications or expand existing ones. The inverter operating system is multi-axis capable. It supports up to four axes with separate application and parameter ranges.

Velocity mode (standard application)

- **Fast set value**
  Simple speed application for lean applications. The speed set value and torque limiting can be specified using analog inputs as well as digitally.

Torque/force and velocity mode (standard application)

- **Comfort set value**
  Expanded torque and speed set value application. Set values and limits can be assigned with the fast set value as well as using fixed values, motor potentiometers and other functions.
- **Technology controller**
  PID controller for torque or speed-controlled applications.

Positioning and master/slave mode (standard application)

- **Command, synchronous command**
  High-performance positioning application with a command interface based on PLCopen. The data for a motion task including target position, velocity and acceleration are transferred together over fieldbus to the inverter, which then processes them independently. The functional scope is rounded out by an electrical cam, motion block switching point and Posi-Latch.
- **Motion block**
  Extensive positioning application with up to 256 motion blocks based on PLCopen. The motion blocks can be selected individually over fieldbus or with binary inputs. They can also be started in a chain. The functional scope is rounded out by an electrical cam, motion block switching point and Posi-Latch.

Electronic cam disk with PLCopen interface (tailor-made applications)

The electronic cam disk application makes it possible to implement complex motion tasks such as:

- Flying saw
- Synchronizer (clock in/clock out)
- Cross cutter
- Welding bar/embossing stamp
- Print mark control

These applications can be implemented quickly and easily using readily understandable, free graphical programming based on IEC 61131-3 CFC. This also allows for customer-specific adaptations to special system conditions. Function blocks based on PLCopen Motion Control are available for this purpose for trained users.

10.1.3 Application training

STOBER offers a multi-level training program that focuses essentially on application programming of the motion controller and inverter.

The application training is performed on the SDS 5000 series.

G5 Basic

Training content: System overview, installation and commissioning of the inverter. Use of option modules. Parameterization, commissioning and diagnostics using the integrated display and commissioning software. Remote maintenance. Basics of controller optimization. Configuration of the drive train. Integrated software functions. Software applications. Connection to a higher-level controller. Basics of safety technology. Practical exercises on training topics.

Software used: POSITool.

G5 Advanced

Training content: Graphical programming with CFC. Special knowledge for regulating, control and safety technology. Practical exercises on training topics.

G5 CAM

Training content: Special knowledge of electronic cam disks. Practical exercises on training topics.

10.2 Technical data

Technical data for inverters can be found in the following sections.

10.2.1 Type designation

FDS	5	015	A

Tab. 1: Example code for type designation

Code	Designation	Design
FDS	Series	
5	Generation	Generation 5
075	Power	075 = 7.5 kW
– **A**	Hardware variants	Without marking: Up to HW 199 A: Starting from HW 200
/H **/L**	Version	Auxiliary voltage for control electronics: • Supply for control electronics over DC link; no additional 24 V_{DC} supply required • Supply of control electronics over 24 V_{DC} to terminal X11

Tab. 2: Meaning of the example code

10.2.2 Sizes

Type	ID No. /H	ID No. /L	Size
FDS 5004A	55420	55412	Size 0
FDS 5007A	55421	55413	Size 0
FDS 5008A	55422	55414	Size 0
FDS 5015A	55423	55415	Size 0
FDS 5022A	55424	55416	Size 1
FDS 5040A	55425	55417	Size 1
FDS 5055A	55426	55418	Size 1
FDS 5075A	55427	55419	Size 1

Tab. 3: Available FDS 5000 types and sizes

FDS 5000 in sizes 0 and 1

10.2.3 General technical data

The following information applies to all inverter types.

Device features	
Protection class of the device	IP20
Protection class of the installation space	At least IP54
Radio interference suppression	Integrated line filter in accordance with EN 61800-3:2012, interference emission class C3
Overvoltage category	III in accordance with EN 61800-5-1:2008
Test symbols	

Tab. 4: Device features

Transport and storage conditions	
Storage/ transport temperature	−20 °C to +70 °C Maximum change: 20 K/h
Relative humidity	Maximum relative humidity 85%, non-condensing
Vibration (transport) in accordance with DIN EN 60068-2-6	5 Hz ≤ f ≤ 9 Hz: 3.5 mm 9 Hz ≤ f ≤ 200 Hz: 10 m/s² 200 Hz ≤ f ≤ 500 Hz: 15 m/s²
Fall height for freefall[1] Weight < 100 kg in accordance with DIN EN 61800-2 (or DIN EN 60721-3-2:1997, class 2M1)	0.25 m

Tab. 5: Transport and storage conditions

Operating conditions	
Surrounding temperature during operation	0 °C to 45 °C with nominal data 45 °C to 55 °C with derating −2.5% / K
Relative humidity	Maximum relative humidity 85%, non-condensing
Installation altitude	0 m to 1000 m above sea level without restrictions 1000 m to 2000 m above sea level with −1.5%/100 m derating
Pollution degree	Pollution degree 2 in accordance with EN 50178
Ventilation	Installed fan
Vibration (operation) in accordance with DIN EN 60068-2-6	5 Hz ≤ f ≤ 9 Hz: 0.35 mm 9 Hz ≤ f ≤ 200 Hz: 1 m/s²

Tab. 6: Operating conditions

Discharge times	
Self-discharge of DC link	5 min

Tab. 7: Discharge times of the DC link circuit

[1] Only valid for components in original packaging

10.2.4 Electrical data

The electrical data of the available sizes as well as the properties of the brake chopper can be found in the following sections.

An explanation of the formula symbols used can be found in the chapter [▷ 13.1].

10.2.4.1 Size 0: FDS 5007A to FDS 5015A

Electrical data	FDS 5007A	FDS 5004A	FDS 5008A	FDS 5015A
ID No. /H	55421	55420	55422	55423
ID No. /L	55413	55412	55414	55415
Recommended motor rating	0.75 kW	0.37 kW	0.75 kW	1.5 kW
U_{1PU}	1 × 230 V, +20% / −40%, 50/60 Hz	3 × 400 V, +32% / −50%, 50 Hz; 3 × 480 V, +10% / −58%, 60 Hz		
$I_{1N,PU}$	1 × 5.9 A	3 × 1.4 A	3 × 2.2 A	3 × 4 A
f_{2PU}	0 – 700 Hz			
U_{2PU}	0 – 230 V	0 – 400 V		
U_{maxPU}	440 V	830 V		

Tab. 8: FDS 5000 electrical data, size 0

Nominal currents up to +45 °C (in the control cabinet)

Operation with asynchronous motor

Electrical data	FDS 5007A	FDS 5004A	FDS 5008A	FDS 5015A
$I_{2N,PU}$	3 × 4 A	3 × 1.3 A	3 × 2.3 A	3 × 4.5 A
I_{2maxPU}	180% for 5 s; 150% for 30 s			
$f_{PWM,PU}$	4 kHz[2]			

Tab. 9: FDS 5000 electrical data, size 0, at 4 kHz clock frequency

Electrical data	FDS 5007A	FDS 5004A	FDS 5008A	FDS 5015A
U_{onCH}	400 – 420 V	780 – 800 V		
U_{offCH}	360 – 380 V	740 – 760 V		
R_{2minRB}	100 Ω	100 Ω		
P_{maxRB}	1.8 kW	6.4 kW		

Tab. 10: Brake chopper electrical data, size 0

10.2.4.2 Size 1: FDS 5022A to FDS 5075A

Electrical data	FDS 5022A	FDS 5040A	FDS 5055A	FDS 5075A
ID No. /H	55424	55425	55426	55427
ID No. /L	55416	55417	55418	55419
Recommended motor rating	2.2 kW	4.0 kW	5.5 kW	7.5 kW
U_{1PU}	3 × 400 V, +32% / −50%, 50 Hz; 3 × 480 V, +10% / −58%, 60 Hz			
$I_{1N,PU}$	3 × 5.3 A	3 × 9.3 A	3 × 12.3 A	3 × 15.8 A
f_{2PU}	0 – 700 Hz			
U_{2PU}	0 – 400 V			
U_{maxPU}	830 V			

Tab. 11: FDS 5000 electrical data, size 1

[2] Clock frequency adjustable from 4 to 16 kHz (see the chapter on derating)

Nominal currents up to +45 °C (in the control cabinet)

Operation with asynchronous motor

Electrical data	FDS 5022A	FDS 5040A	FDS 5055A	FDS 5075A
$I_{2N,PU}$	3 × 5.5 A	3 × 10 A	3 × 12 A	3 × 16 A
I_{2maxPU}	180% for 5 s; 150% for 30 s			
$f_{PWM,PU}$	4 kHz[3]			

Tab. 12: FDS 5000 electrical data, size 1, at 4 kHz clock frequency

Electrical data	FDS 5022A	FDS 5040A	FDS 5055A	FDS 5075A
U_{onCH}	780 – 800 V			
U_{offCH}	740 – 760 V			
R_{2minRB}	100 Ω	47 Ω		
P_{maxRB}	6.4 kW	13.6 kW		

Tab. 13: Brake chopper electrical data, size 1

10.2.4.3 Power loss data in accordance with EN 61800-9-2

Type	Nominal current $I_{2N,PU}$	Apparent power	Absolute losses $P_{V,CU}$[4]	Operating points[5]								IE class[6]
				(0/25)	(0/50)	(0/100)	(50/25)	(50/50)	(50/100)	(90/50)	(90/100)	
				Relative losses								
	[A]	[kVA]	[W]	[%]								
FDS 5004A	1.3	0.9	6	5.92	5.94	6.20	5.97	6.02	6.36	6.13	6.62	IE2
FDS 5007A	4	0.9	6	5.01	5.07	5.68	5.20	5.37	6.30	5.88	7.43	IE2
FDS 5008A	2.3	1.6	6	2.98	3.13	3.49	3.02	3.22	3.71	3.36	4.09	IE2
FDS 5015A	4.5	3.1	< 9	1.71	1.86	2.24	1.75	1.97	2.51	2.16	3.04	IE2
FDS 5022A	5.5	3.8	< 9	1.64	1.79	2.16	1.69	1.89	2.38	2.02	2.74	IE2
FDS 5040A	10	6.9	< 9	1.38	1.54	1.93	1.43	1.64	2.17	1.80	2.57	IE2
FDS 5055A	12	8.3	< 9	1.10	1.26	1.76	1.15	1.36	2.04	1.51	2.50	IE2
FDS 5075A	16	11.1	< 9	0.95	1.12	1.67	1.00	1.23	1.98	1.41	2.52	IE2

Tab. 14: Relative losses in FDS 5000 inverters in accordance with EN 61800-9-2

[3] Clock frequency adjustable from 4 to 16 kHz (see the chapter on derating)

[4] Absolute losses for a power unit that is switched off

[5] Operating points for relative motor stator frequency in % and relative torque current in %

[6] IE class in accordance with EN 61800-9-2

Type	Nominal current $I_{2N,PU}$	Apparent power	Absolute losses $P_{V,CU}$[7]	Operating points[8]								IE class[9]	Comparison[10]
				(0/25)	(0/50)	(0/100)	(50/25)	(50/50)	(50/100)	(90/50)	(90/100)		
				Absolute losses P_V									
	[A]	[kVA]	[W]	[W]									[%]
FDS 5004A	1.3	0.9	6	53.3	53.5	55.8	53.7	54.2	57.2	55.2	59.6	IE2	46.2
FDS 5007A	4	0.9	6	45.1	45.6	51.1	46.8	48.3	56.7	52.9	66.9	IE2	51.8
FDS 5008A	2.3	1.6	6	47.7	50.1	55.8	48.3	51.5	59.3	53.8	65.4	IE2	40.2
FDS 5015A	4.5	3.1	< 9	52.9	57.6	69.3	54.4	61.0	77.9	67.1	94.1	IE2	39.6
FDS 5022A	5.5	3.8	< 9	62.4	68.0	82.0	64.1	71.7	90.6	76.9	104.1	IE2	34.9
FDS 5040A	10	6.9	< 9	95.3	106.1	133.3	98.6	113.2	149.9	123.9	177.0	IE2	37.1
FDS 5055A	12	8.3	< 9	91.3	104.6	145.9	95.1	113.1	169.2	125.7	207.7	IE2	35.7
FDS 5075A	16	11.1	< 9	104.9	124.0	184.6	110.3	136.6	219.8	156.0	279.8	IE2	35.8

Tab. 15: Absolute losses in FDS 5000 inverters in accordance with EN 61800-9-2

General conditions

The loss data applies to inverters without accessories.

The power loss calculation is based on a three-phase supply voltage with 400 V_{AC}/50 Hz.

The calculated data includes a supplement of 10% in accordance with EN 61800-9-2.

The power loss specifications refer to a clock frequency of 4 kHz.

The absolute losses for a power unit that is switched off refer to the 24 V_{DC} power supply of the control electronics.

10.2.5 Derating by increasing the clock frequency

Depending on the clock frequency $f_{PWM,PU}$, the following values for nominal output currents $I_{2N,PU}$ arise.

Type	$I_{2N,PU}$ 4 kHz	$I_{2N,PU}$ 8 kHz	$I_{2N,PU}$ 16 kHz
FDS 5004A	1.3 A	1.0 A	0.7 A
FDS 5007A	4.0 A	3.0 A	2.0 A
FDS 5008A	2.3 A	1.7 A	1.2 A
FDS 5015A	4.5 A	3.4 A	2.2 A
FDS 5022A	5.5 A	4.0 A	2.6 A
FDS 5040A	10 A	6 A	3.3 A
FDS 5055A	12.0 A	7.5 A	4.8 A
FDS 5075A	16.0 A	10.0 A	5.7 A

Tab. 16: Nominal output current $I_{2N,PU}$ dependent on the clock frequency

[7] Absolute losses for a power unit that is switched off

[8] Operating points for relative motor stator frequency in % and relative torque current in %

[9] IE class in accordance with EN 61800-9-2

[10] Comparison of the losses for the reference inverter related to IE2 in the nominal point (90, 100)

10.2.6 Dimensions

The dimensions of the available FDS 5000 sizes can be found in the following chapters.

10.2.6.1 Dimensions: size 0 to 1

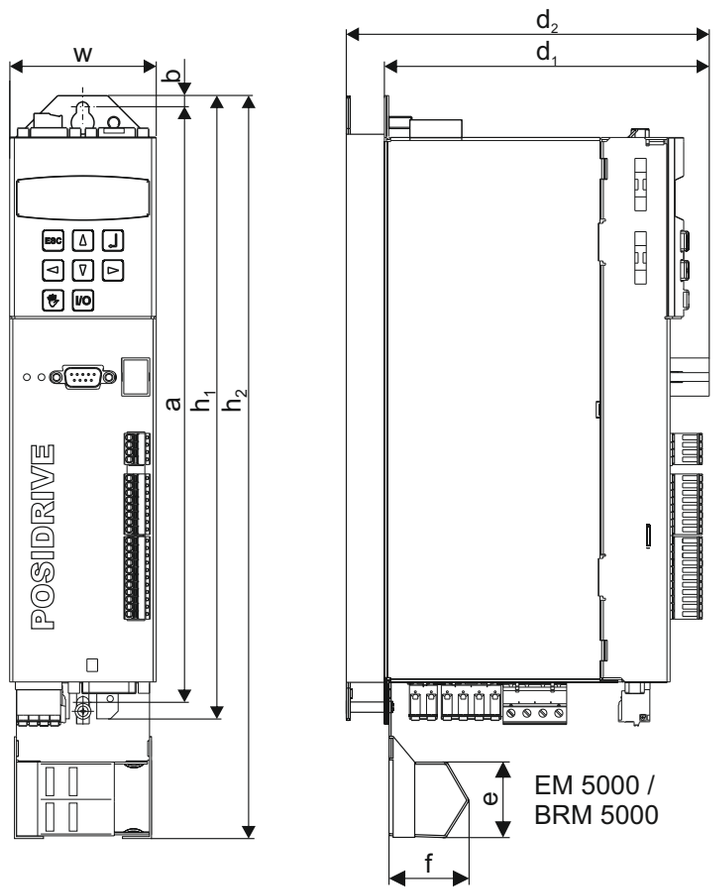

Fig. 1: FDS 5000 dimensional drawing

Dimensions [mm]			Size 0	Size 1
Inverter	Height	h_1	300	
		h_2[11]	360	
	Width	w	70	
	Depth	d_1	157	242
		d_2[12]	175	260
EMC shroud	Height	e	37.5	
	Depth	f	40	
Fastening holes	Vertical distance	a	283	
	Vertical distance to the upper edge	b	6	

Tab. 17: FDS 5000 dimensions [mm]

10.2.7 Minimum clearances

The specified dimensions refer to the outside edges of the inverter.

Minimum clearance	Above	Below	On the side
Size 0 – Size 1	100	100	5
... with EMC shroud or brake module	100	120	5

Tab. 18: Minimum clearances [mm]

[11] h2 = height incl. EM 5000 EMC shroud or BRM 5000 brake module

[12] d2 = Depth including RB 5000 brake resistor

10.3 Inverter/motor combinations

Parameterization of a STOBER inverter is exceptionally easy, especially together with four-pole STOBER asynchronous motors. The motor is fully typified by inputting just the motor size (e.g. 90L) and its wiring (star or delta). A delta connection (measurement point 230 V, 50 Hz) is available for motors up to 3 kW (size 100). By increasing the voltage at higher frequencies, the full torque can be drawn through the motor up to 87 Hz. It usually makes sense to take this expanded speed adjustment range into account when selecting the gear unit. You can find more detailed information in the chapter [▶ 5.6].

An explanation of the formula symbols used can be found in the chapter [▶ 13.1].

									FDS 5007A	FDS 5008A	FDS 5015A	FDS 5022A	FDS 5040A	FDS 5055A	FDS 5075A
									$I_{2N,PU}$ [A] ($f_{PWM,PU}$ = 4 kHz)						
	f_T [Hz]	pz	Con-nec-tion	P_N [kW]	n_N [rpm]	M_N [Nm]	M_k/M_N	I_N [A]	4	2.3	4.5	5.5	10	12	16
Δ 230 V / Y 400 V motor winding									**$I_{2N,PU}$ / I_N**						
IE3D080L04	50	4	Y	0.75	1445	5.0	3.7	1.7		1.4					
IE3D080L04	87	4	Δ	1.3	2503	5.0	3.7	2.94	1.4		1.5	1.9			
IE3D090S04	50	4	Y	1.1	1440	7.3	3.7	2.5	1.6		1.8	2.2			
IE3D090S04	87	4	Δ	1.91	2494	7.3	3.7	4.33			1.0	1.3			
IE3D090LX04	50	4	Y	1.5	1445	9.8	4.9	3.4	1.2		1.3	1.6			
IE3D090LX04	87	4	Δ	2.6	2503	9.8	4.9	5.89					1.7	2.0	
IE3D100KX04	50	4	Y	2.2	1450	14.5	3.8	4.55				1.2	2.2		
IE3D100KX04	87	4	Δ	3.81	2511	14.5	3.8	7.88					1.3	1.5	2.0
IE3D100LX04	50	4	Y	3.0	1450	19.8	4	6.35					1.6	1.9	
IE3D100LX04	87	4	Δ	5.2	2511	19.8	4	11						1.1	1.5
IE3D112M04	50	4	Δ	4.0	1465	26.1	4.5	7.9					1.3	1.5	2.0
IE3D132S04	50	4	Δ	5.5	1480	35	5.4	12						1.0	1.3
IE3D132M04	50	4	Δ	7.5	1475	49	3.9	14.5							1.1

10.4 Accessories

You can find information about the available accessories in the following chapters.

10.4.1 Safety technology

ASP 5001 – Safe Torque Off

Available with the standard design.

Option module for implementation of integrated safety function Safe Torque Off (STO).
The ASP 5001 may only be installed by STÖBER Antriebstechnik GmbH + Co. KG!
The ASP 5001 must be ordered with the basic device.

10.4.2 Communication

G3 connection cable

ID No. 41488
Cable for connecting the inverter to terminal X3 with the PC, D-sub connector, 9-pole, socket/socket, approx. 5 m.

USB adapter to RS232

ID No. 45616
Adapter for connecting RS232 to a USB port.

CANopen DS-301 CAN 5000 communication module

ID No. 44574
Accessory part for connecting CAN bus.

PROFIBUS DP-V1 DP 5000 communication module

ID No. 44575
Accessory module for connecting PROFIBUS DP-V1.

EtherCAT ECS 5000 communication module

ID No. 49014
Accessory part for connecting EtherCAT (CANopen over EtherCAT).

EtherCAT cables

Ethernet patch cable, CAT5e, yellow.
The following designs are available:
ID No. 49313: Length approx. 0.2 m.
ID No. 49314: Length approx. 0.35 m.

PROFINET PN 5000 communication module

ID No. 53893
Accessory part for connecting PROFINET.

10.4.3 Terminal module

LEA 5000 terminal module

ID No. 49029
Terminals:

- 8 binary inputs
- 8 binary outputs

Delivery including mounting plate

10.4.4 Braking resistor

In addition to the inverters, STOBER offers braking resistors in different sizes and performance classes described below. For the selection, note the minimum permitted braking resistances specified in the technical data of the individual inverter types.

10.4.4.1 FZMU, FZZMU tubular fixed resistor

Type	FZMU 400×65	FZZMU 400×65
ID No.	49010	53895
FDS 5007A	X	—
FDS 5004A	X	—
FDS 5008A	X	—
FDS 5015A	X	—
FDS 5022A	X	—
FDS 5040A	(X)	X
FDS 5055A	(X)	X
FDS 5075A	(X)	X

Tab. 19: Assignment for FZMU, FZZMU braking resistor – FDS 5000 inverter

X	Recommended
(X)	Possible
—	Not possible

Properties

Specification	FZMU 400×65	FZZMU 400×65
ID No.	49010	53895
Type	Tubular fixed resistor	Tubular fixed resistor
Resistance [Ω]	100	47
Power [W]	600	1200
Therm. time const. τ_{th} [s]	40	40
Pulse power for < 1 s [kW]	18	36
U_{max} [V]	848	848
Weight [kg]	Approx. 2.2	Approx. 4.2
Protection class	IP20	IP20
Test symbols	c UL us CE	c UL us CE

Tab. 20: FZMU, FZZMU specification

Dimension	FZMU 400×65	FZZMU 400×65
ID No.	49010	53895
L x D	400 × 65	400 × 65
H	120	120
K	6.5 × 12	6.5 × 12
M	430	426
O	485	450
R	92	185
U	64	150
X	10	10

Tab. 21: FZMU, FZZMU dimensions [mm]

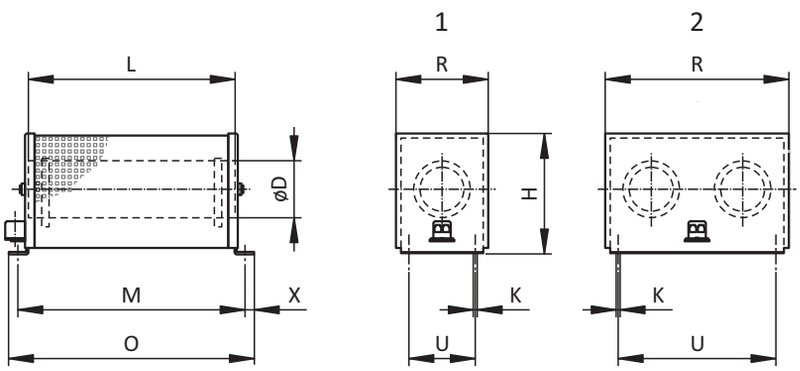

Fig. 2: FZMU (1), FZZMU (2) dimensional drawing

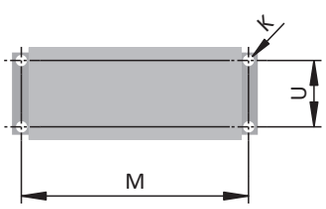

Fig. 3: FZMU, FZZMU drilling diagram

10.4.4.2 GVADU, GBADU flat resistor

Type	GVADU 210×20	GBADU 265×30	GBADU 405×30	GBADU 335×30
ID No.	55441	55442	55499	55443
FDS 5007A	X	X	X	—
FDS 5004A	X	X	X	—
FDS 5008A	X	X	X	—
FDS 5015A	X	X	X	—
FDS 5022A	X	X	X	—
FDS 5040A	(X)	(X)	(X)	X
FDS 5055A	(X)	(X)	(X)	X
FDS 5075A	(X)	(X)	(X)	X

Tab. 22: Assignment for GVADU, GBADU braking resistor – FDS 5000 inverter

X	Recommended
(X)	Possible
—	Not possible

Properties

Specification	GVADU 210×20	GBADU 265×30	GBADU 405×30	GBADU 335×30
ID No.	55441	55442	55499	55443
Type	Flat resistor	Flat resistor	Flat resistor	Flat resistor
Resistance [Ω]	100	100	100	47
Power [W]	150	300	500	400
Therm. time const. τ_{th} [s]	60	60	60	60
Pulse power for < 1 s [kW]	3.3	6.6	11	8.8
U_{max} [V]	848	848	848	848
Cable design	Radox	FEP	FEP	FEP
Cable length [mm]	500	500	500	500
Conductor cross-section [AWG]	18/19 (0.82 mm²)	14/19 (1.9 mm²)	14/19 (1.9 mm²)	14/19 (1.9 mm²)
Weight [g]	300	950	1450	1200
Protection class	IP54	IP54	IP54	IP54
Test symbols	c UL us, CE	c UL us, CE	c UL us, CE	c UL us, CE

Tab. 23: GVADU, GBADU specification

Dimensions

Dimension	GVADU 210×20	GBADU 265×30	GBADU 405×30	GBADU 335×30
ID No.	55441	55442	55499	55443
A	210	265	405	335
H	192	246	386	316
C	20	30	30	30
D	40	60	60	60
E	18.2	28.8	28.8	28.8
F	6.2	10.8	10.8	10.8
G	2	3	3	3
K	2.5	4	4	4
J	4.3	5.3	5.3	5.3
β	65°	73°	73°	73°

Tab. 24: GVADU, GBADU dimensions [mm]

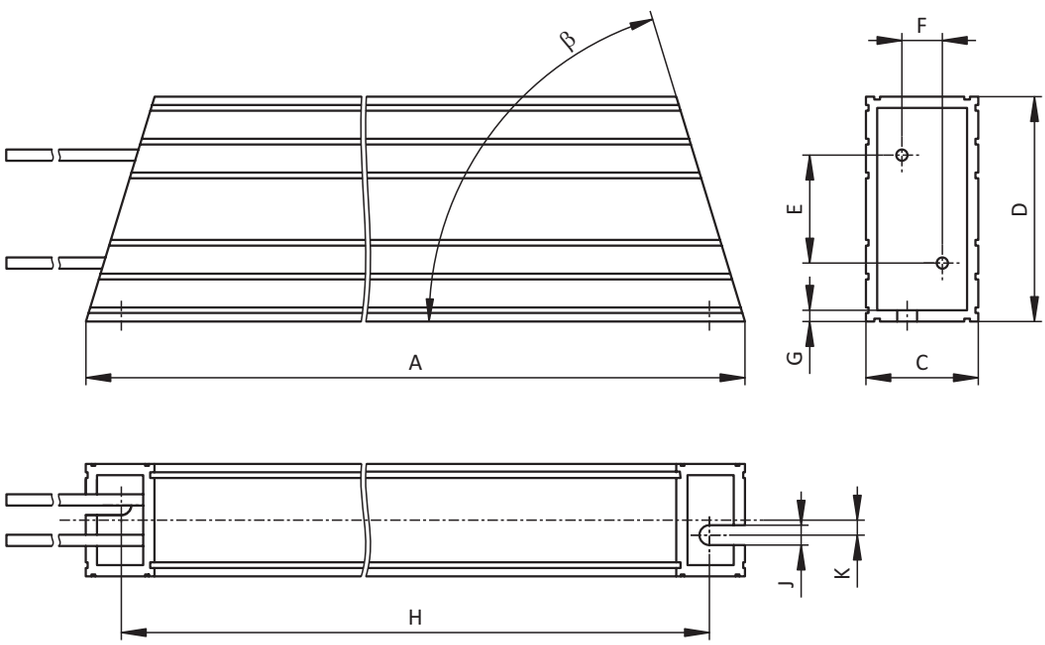

Fig. 4: GVADU, GBADU dimensional drawing

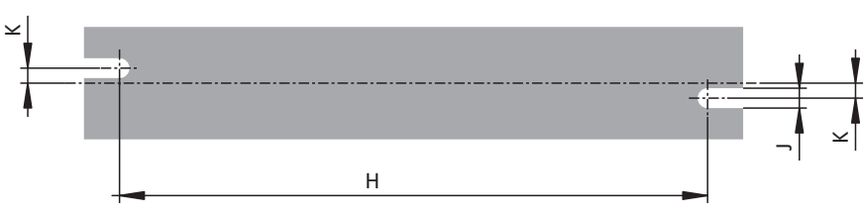

Fig. 5: GVADU, GBADU drilling diagram

10.4.4.3 RB 5000 rear section braking resistor

Type	RB 5047	RB 5100	RB 5200
ID No.	44966	44965	44964
FDS 5007A	—	X	X
FDS 5004A	—	X	X
FDS 5008A	—	X	X
FDS 5015A	—	X	X
FDS 5022A	—	X	X
FDS 5040A	X	(X)	(X)
FDS 5055A	X	(X)	(X)
FDS 5075A	X	(X)	(X)

Tab. 25: Assignment for RB 5000 braking resistor – FDS 5000 inverter

X	Recommended
(X)	Possible
—	Not possible

Properties

Specification	RB 5047	RB 5100	RB 5200
ID No.	44966	44965	44964
Resistance [Ω]	47	100	200
Power [W]	60	60	40
Therm. time const. τ_{th} [s]	8	8	6
Pulse power for < 1 s [kW]	1.5	1.0	0.5
U_{max} [V]	800	800	800
Weight [g]	approx. 460	approx. 440	approx. 440
Cable design	Radox	Radox	Radox
Cable length [mm]	250	250	250
Conductor cross-section [AWG]	18/19 (0.82 mm²)	18/19 (0.82 mm²)	18/19 (0.82 mm²)
Maximum torque of M5 threaded bolts [Nm]	5	5	5
Protection class	IP40	IP40	IP40
Test symbols			

Tab. 26: RB 5000 specification

Dimensions

Dimension	RB 5047	RB 5100	RB 5200
ID No.	44966	44965	44964
Height	300	300	300
Width	62	62	62
Depth	18	18	18
Drilling diagram corresponds to size	Size 1	Size 0 and Size 1	Size 0

Tab. 27: RB 5000 dimensions [mm]

10.4.5 Choke

Technical specifications for suitable chokes can be found in the following chapters.

10.4.5.1 TEP output choke

Output chokes are required starting from a cable length of > 50 m.

Information

The following technical data only applies to a rotating magnetic field frequency of 200 Hz. For example, this rotating magnetic field frequency is achieved with a motor with 4 pole pairs and a nominal speed of 3000 rpm. Always observe the specified derating for higher rotating magnetic field frequencies. Also observe the relationship with the clock frequency.

Properties

	TEP3720-0ES41	TEP3820-0CS41
ID No.	53188	53189
Voltage range	3 × 0 to 480 V	
Frequency range	0 – 200 Hz	
$I_{N,MF}$ at 4 kHz	4 A	17.5 A
$I_{N,MF}$ at 8 kHz	3.3 A	15.2 A
Max. permitted motor cable length with output choke	100 m	
Max. surrounding temperature $\vartheta_{amb,max}$	40 °C	
Protection class	IP00	
Winding losses	11 W	29 W
Iron losses	25 W	16 W
Connections	Screw terminals	
Max. conductor cross-section	10 mm²	
UL Recognized Component (CAN; USA)	Yes	
Test symbols	c UL us CE	

Tab. 28: Specification for TEP

Project configuration

Select the output chokes in accordance with the nominal currents of the output chokes, motor and drive controller. In particular, observe the derating of the output choke for rotating magnetic field frequencies higher than 200 Hz. You can calculate the rotating magnetic field frequency for your drive with the following formula:

$$f_N = n_N \times \frac{p}{60}$$

Derating

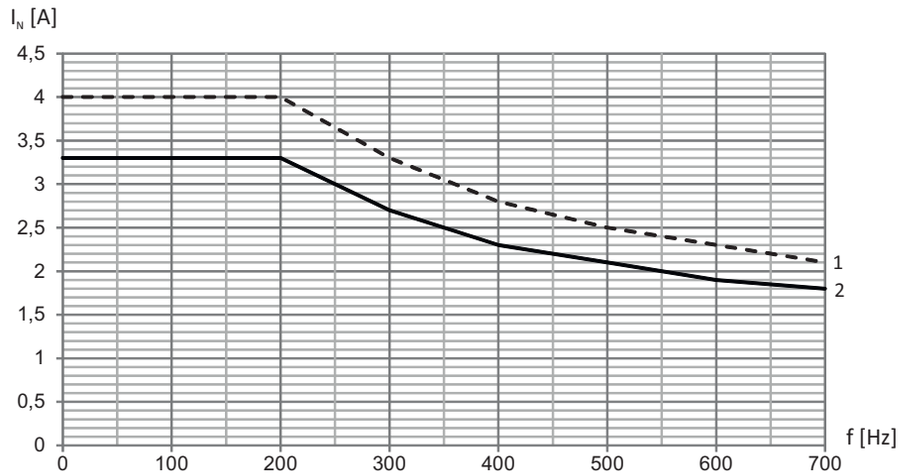

Fig. 6: Derating the nominal current depending on the clock frequency, TEP3720-0ES41

1 4 kHz clock frequency

2 8 kHz clock frequency

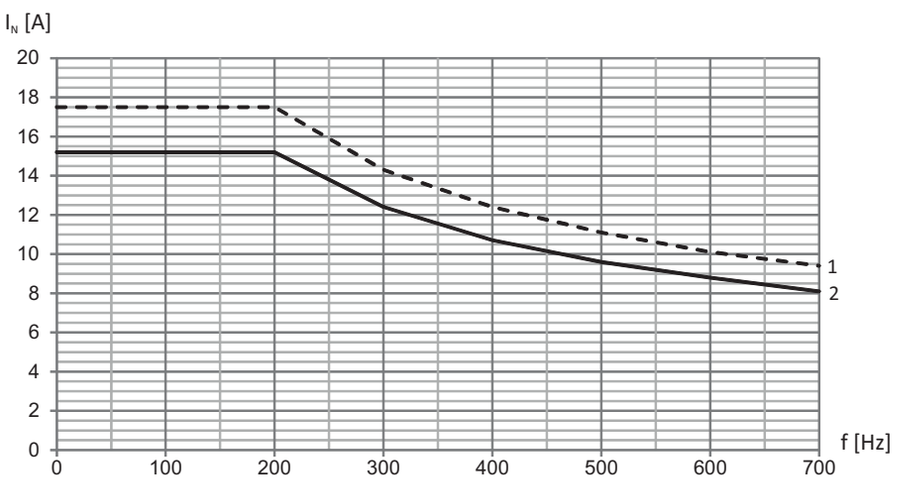

Fig. 7: Derating the nominal current depending on the clock frequency, TEP3820-0CS41

1 4 kHz clock frequency

2 8 kHz clock frequency

Derating – Effect of surrounding temperature

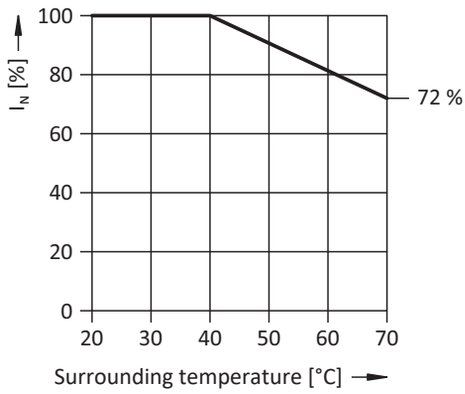

Fig. 8: Derating the nominal current based on surrounding temperature

Derating – Effect of the installation elevation

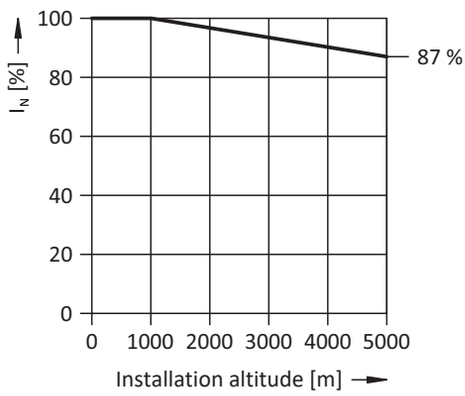

Fig. 9: Derating the nominal current depending on installation elevation

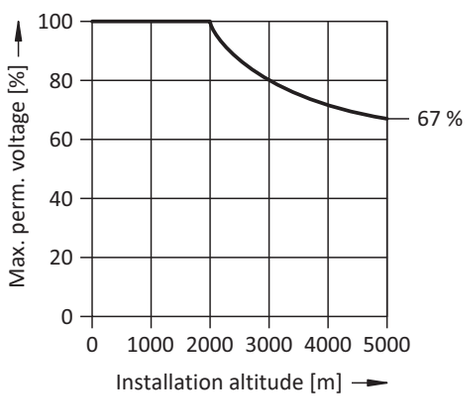

Fig. 10: Derating the voltage depending on installation elevation

Dimensions and weight

Dimension	TEP3720-0ES41	TEP3820-0CS41
Height h [mm]	Max. 153	Max. 153
Width w [mm]	178	178
Depth d [mm]	73	88
Vertical distance – Fastening holes a1 [mm]	166	166
Vertical distance – Fastening holes a2 [mm]	113	113
Horizontal distance – Fastening holes b1 [mm]	53	68
Horizontal distance – Fastening holes b2 [mm]	49	64
Drill holes – Depth e [mm]	5.8	5.8
Drill holes – Width f [mm]	11	11
Screw connection – M	M5	M5
Weight [g]	2900	5900

Tab. 29: TEP dimensions and weight

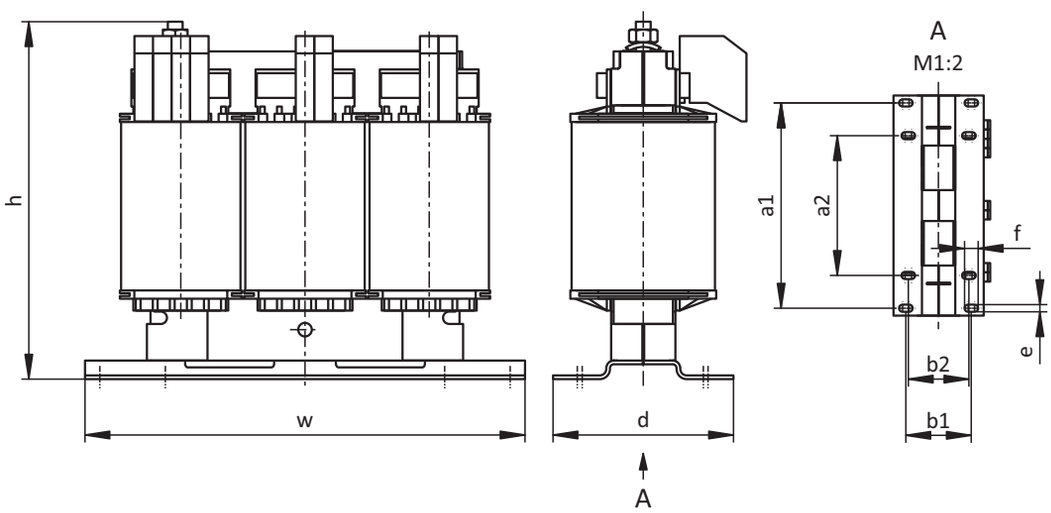

Fig. 11: TEP dimensional drawing

10.4.6 Brake module and EMC shroud

Brake module for 24 V brake BRM 5000

ID No. 44571
Brake module for inverters of the FDS 5000 and MDS 5000 series.
Accessory part for control of a brake (24 V_{DC}) and (for inverters up to size 2) for connecting to the shield of the power cable.
Can be attached to the basic housing.
Including shield connection terminal.

EM 5000 EMC shroud

ID No. 44959
EMC shroud for servo inverters of generation 5.
Accessory part for shield connection of the power cable for inverters up to size 2.
Can be attached to the basic housing.
Including shield connection terminal.

10.4.7 Control box

Control box

Operating device for parameterization and operation of servo inverters from the FDS 5000 and MDS 5000 series.
The connection cable with a length of 1.5 m is included in the scope of delivery.
The following designs are available:
ID No. 42224: Service variant.
ID No. 42225: Installation DIN housing 96 x 96 mm, protection class IP54.

Control box cable

Connection cable from control box to inverter.
The following designs are available:
ID No. 43216: 5 m.
ID No. 43217: 10 m.

10.4.8 Removable data storage

Paramodul removable data storage

Included in the standard version.

ID No. 55463
Memory module for configuration and parameters.

10.5 Further information

10.5.1 Directives and standards

The following European directives and standards are relevant for inverters:

- Machinery Directive 2006/42/EC
- Low Voltage Directive 2014/35/EU
- EMC Directive 2014/30/EU
- EN 61326-3-1:2008
- EN 61800-3:2012-09 and 1:2014-02
- EN 61800-5-1:2008-04 and 1:2010-04
- EN 61800-5-2:2016-04
- EN 50178:1997

10.5.2 Symbols, marks and test symbols

Grounding symbol
Grounding symbol in accordance with IEC 60417, symbol 5019.

RoHS lead-free mark
Marking in accordance with RoHS directive 2011-65-EU.

CE mark
Manufacturer's self declaration: The product meets the requirements of EU directives.

UL test symbol
This product is listed by UL for the United States and Canada. Representative samples of this product have been evaluated by UL and meet the requirements of applicable standards.

UL recognized component mark
This component or material is recognized by UL. Representative samples of this product have been evaluated by UL and meet applicable requirements.

10.5.3 Additional documentation

Additional documentation related to the product can be found at http://www.stoeber.de/en/downloads/

Enter the ID of the documentation in the Search... field.

Documentation	ID
Configuration manual for POSIDRIVE FDS 5000 frequency inverters	442269

11 Connection method

Table of contents

11.1 Overview 366

11.2 Conventions for cables 367

11.3 Encoder cables 367

11.3.1 Differential HTL incremental encoders 368

11.3.2 SSI encoders 369

11.4 Additional documentation 369

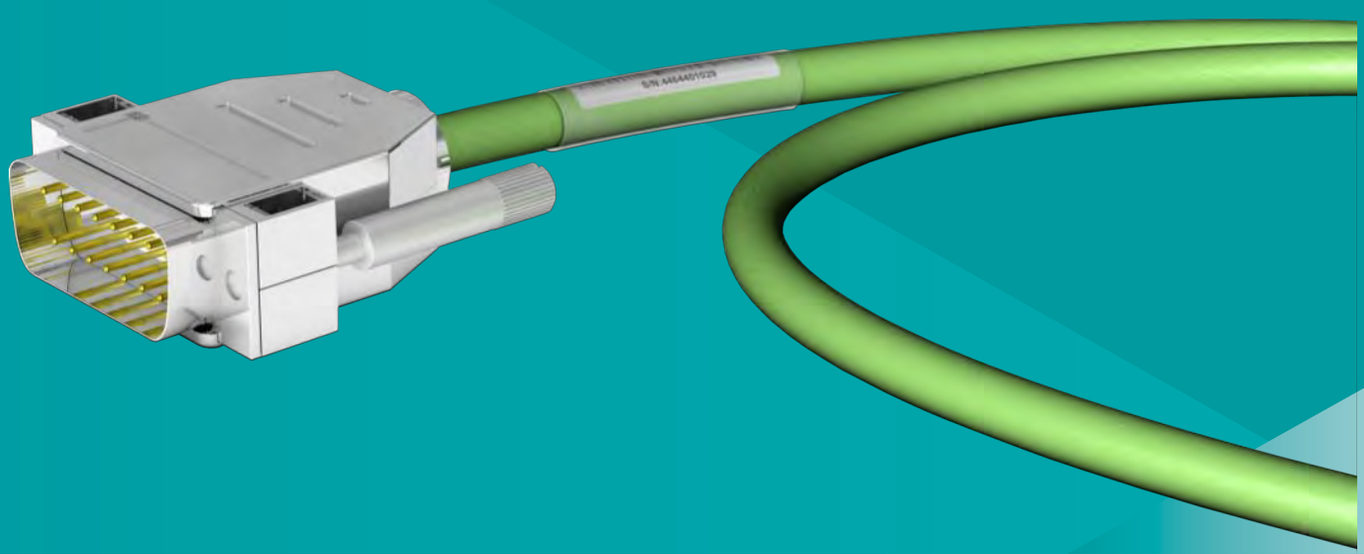

11 Connection method

11.1 Overview

Coordinated connection methods for STOBER drive controllers

Features

- Torsional stress ±30°/m
- Bending resistance
- Oil resistance
- Chemical resistance

A drive controller, cable and motor that are not coordinated with one another can lead to impermissibly high voltage peaks in the drive system, which may cause damage to the motor. The legal requirements of (EMC) Directive 2014/30/EU must also be observed.

Combining STOBER motors, STOBER cables and STOBER drive controllers enables you to comply with these legal requirements.

STOBER offers a range of cables to match. Cables are available in different lengths and are ready-made on both ends.

Using unsuitable connection cables may void any claims made under the warranty.

11.2 Conventions for cables

In the cable connection descriptions, core colors are shortened and used as follows.

Cable colors

BK:	BLACK	PK:	PINK
BN:	BROWN	RD:	RED
BU:	BLUE	VT:	VIOLET
GN:	GREEN	WH:	WHITE
GY:	GRAY	YE:	YELLOW
OG:	ORANGE		

Formatting conventions

Two-colored core:	WHYE	WHITEYELLOW (white and yellow)
Single-colored core:	BK/BN	BLACK/BROWN (black or brown)

11.3 Encoder cables

STOBER motors are equipped with encoder systems and plug connectors as standard.

STOBER provides suitable cables in various lengths, conductor cross-sections and connector sizes.

The cables are available ready-made in the lengths 2.5 m, 5.0 m, 7.5 m, 10.0 m, 12.5 m, 15.0 m, 18.0 m, 20.0 m, 25.0 m, 30.0 m.
Other lengths on request.

You can find the technical data for the encoder systems in the chapter Encoders.

11.3.1 Differential HTL incremental encoders

Suitable encoder cables are described below.

11.3.1.1 Connection description

The encoder cable is available in plug connector size con.23 with a speedtec quick lock.

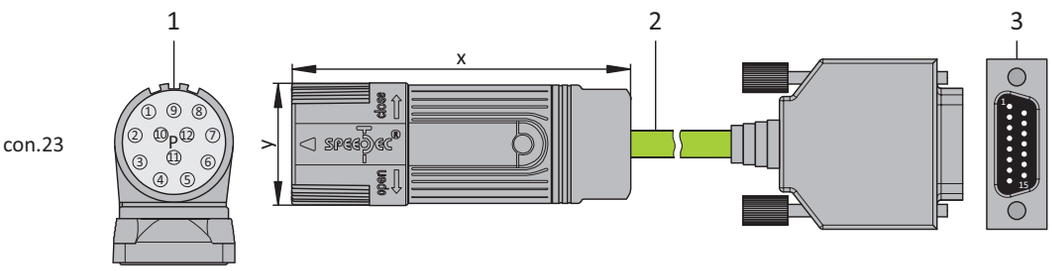

1: Plug connectors

2: STOBER encoder cable

3: D-sub X4

Information

For the connection of an HTL incremental encoder to terminal X4 of the SC6 or SI6 drive controller, you need the HT6 adapter (ID No. 56665). HT6 takes over level conversion from HTL signals to TTL signals.

Encoder cables – con.23 plug connectors

Motor (1)					Cable (2)	drive controllers (3)
Connection diagram	Pin	Designation	Core color up to size 80	Core color size 90 or larger	Core color	Pin X4
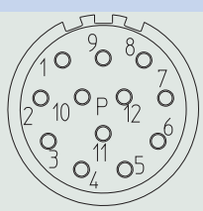	1	B–	PK	BK	YE	9
	2	—	—	YE	—	—
	3	N+	BU	PK	PK	3
	4	N–	RD	WH	GY	10
	5	A+	GN	GN	BN	6
	6	A–	YE	BN	WH	11
	7	—	—	—	—	—
	8	B+	GY	GY	GN	1
	9	—	—	—	—	—
	10	GND	WH	BU	BU	2[1]
	11	—	—	VT	—	—
	12	U_2	BN	RD	RD	4
	Housing	Shield	—	—	—	—

Tab. 1: con.23 encoder cable pin assignment, incremental HTL

Length x [mm]	Diameter y [mm]
58	26

Tab. 2: con.23 dimensions

[1] Pin 12 (Sense) with pin 2 (GND) bridged: The bridge is constructed in the cable connector that is connected to X4.

11.3.2 SSI encoders

Suitable encoder cables are described below.

11.3.2.1 Connection description

The encoder cable is available in plug connector size con.23 with a speedtec quick lock.

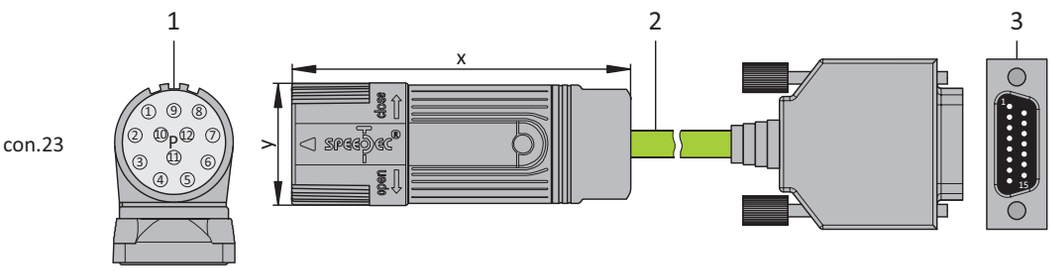

1: Plug connectors

2: STOBER encoder cable

3: D-sub X4

Encoder cables – con.23 plug connectors

Motor (1)				Cable (2)	drive controllers (3)
Connection diagram	Pin	Designation	Core color	Core color	Pin X4
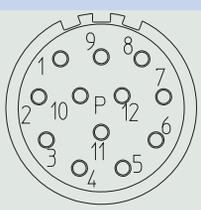	1	Clock+	VT	YE	8
	2	Sense U_2	BNGN	PK	12
	3	—	—	—	—
	4	—	—	—	—
	5	Data–	PK	BN	13
	6	Data+	GY	WH	5
	7	—	—	—	—
	8	Clock–	YE	GN	15
	9	—	—	—	—
	10	GND	WHGN	BU	2
	11	—	—	—	—
	12	U_2	BNGN	RD	4
	Housing	Shield	—	—	—

Tab. 3: con.23 encoder cable pin assignment, SSI

Length x [mm]	Diameter y [mm]
58	26

Tab. 4: con.23 dimensions

11.4 Additional documentation

Additional documentation related to the product can be found at http://www.stoeber.de/en/downloads/

Enter the ID of the documentation in the Search... field.

Documentation	ID
Connection method manual	443102

12 Close to customers around the world

We offer you committed, expert advice and support and are available around the clock if service is required:

- 4 sales centers in Germany
- Worldwide presence in over 40 countries
- STOBER SERVICE NETWORK with over 80 service partners worldwide

Germany

STÖBER Antriebstechnik GmbH + Co. KG

Kieselbronner Strasse 12

75177 Pforzheim

Phone: +49 7231 582-0

sales@stoeber.de

www.stober.com

Service hotline: +49 7231 582-3000

Subsidiaries

STOBER AUSTRIA www.stoeber.at Phone +43 7613 7600-0 sales@stoeber.at	**STOBER SOUTH EAST ASIA** www.stober.sg sales@stober.sg
STOBER CHINA www.stoeber.cn Phone +86 10 6590 7391 sales@stoeber.cn	**STOBER SWITZERLAND** www.stoeber.ch Phone +41 56 496 96 50 sales@stoeber.ch
STOBER FRANCE www.stober.fr Phone +33 4 78.98.91.80 sales@stober.fr	**STOBER TAIWAN** www.stober.tw Phone +886 4 2358 6089 sales@stober.tw
STOBER ITALY www.stober.it Phone +39 02 93909570 sales@stober.it	**STOBER TURKEY** www.stober.com Phone +90 212 338 8014 sales-turkey@stober.com
STOBER JAPAN www.stober.co.jp Phone +81 3 5395 678 8 sales@stober.co.jp	**STOBER UNITED KINGDOM** www.stober.co.uk Phone +44 1543 458 858 sales@stober.co.uk
STOBER USA www.stober.com Phone +1 606 759 5090 sales@stober.com	

13 Appendix

Table of contents

13.1 Formula symbols 374

13.2 Trademarks 376

13.3 Sales terms and delivery conditions 376

13.4 Publication details 376

13.1 Formula symbols

The formula symbols for values actually present in the application are marked with *.

Symbol	Unit	Explanation
C_F	µF	Capacitance of the operating capacitor for a Steinmetz connection
C_{maxPU}	F	Charging capacity of the power unit
$\cos\phi_N$	–	Active factor for the motor at the nominal point
$\cos\phi_F$	–	Active factor of the forced ventilation unit at the nominal point
C_{PU}	F	Self-capacitance of the power unit
Δ	–	Delta connection
$\Delta\phi_2$	arcmin	Backlash at the output shaft with a blocked input
$\Delta\vartheta$	K	Temperature difference
ΔJ_B	kgm^2	Additive mass moment of inertia of a motor with brake
Δm_B	kg	Additive weight of a motor with brake
D_{IA}	%	Reduction in the nominal current depending on the installation altitude
D_T	%	Reduction in the nominal current depending on the surrounding temperature
ED_{10}	%	Duty cycle based on 10 minutes
η	%	Efficiency
F_{2ax20}	N	Permitted axial force on the gear unit output for $n_{2m*} \leq 20$ rpm
F_{2axN}	N	Permitted nominal axial force at the gear unit output
F_{2ax*}	N	Actual axial force at the gear unit output
f_{2PU}	Hz	Output frequency of the power unit
F_{2rad20}	N	Permitted radial force on the gear unit output for $n_{2m*} \leq 20$ rpm
F_{2radN}	N	Permitted nominal radial force at the gear unit output
F_{2rad*}	N	Actual radial force on the gear unit output
fB_{mot}	–	Motor operating factor
fB_{op}	–	Operating mode operating factor
fB_t	–	Run-time operating factor
f_{mot*}	Hz	Application-based motor rotating magnetic field frequency
f_N	Hz	Rotating magnetic field frequency at nominal speed
$f_{PWM,PU}$	Hz	Frequency of the pulse width modulation of the power unit
f_T	Hz	Rotating magnetic field frequency at nominal point
i	–	Gear ratio
i_{exact}	–	Mathematically exact gear ratio
I_{1maxCU}	A	Maximum input current of the control unit
I_{1mot}	A	Motor starting current
$I_{1N,PU}$	A	Nominal input current of the power unit
I_{2maxPU}	A	Maximum output current of the power unit
$I_{2N,PU}$	A	Nominal output current of the power unit
$I_{2N,PU(red)}$	A	Reduced nominal output current of the power unit
$I_{2PU(A)}$	A	Output current of the power unit for axis A
$I_{2PU(B)}$	A	Output current of the power unit for axis B
I_C	A	Capacitor current for a Steinmetz connection
I_N	A	Nominal current
$I_{N,B}$	A	Nominal current of the brake at 20 °C
$I_{N,F}$	A	Nominal current of the forced ventilation unit
$I_{N,MF}$	A	Nominal current of the choke or motor filter
J	kgm^2	Mass moment of inertia
J_1	kgm^2	Mass moment of inertia relative to the gear unit input
J_{1*}	kgm^2	Actual mass moment of inertia relative to the gear unit input
J_{2*}	kgm^2	Actual mass moment of inertia relative to the gear unit output
K_{Bpb}	–	Factor by which the intervals between maintenance for the brake are extended if a Powerbox rectifier is used instead of a half-wave or bridge rectifier
l	mm	Length of the output shaft
$L_{pA,F}$	dBA	Noise level of the forced ventilation unit in the optimal operating range
m	kg	Weight
M_{1mot}	Nm	Motor starting torque

Symbol	Unit	Explanation
M_{2k20}	Nm	Permitted breakdown torque on the gear unit output for $n_{2m*} \leq 20$ rpm
M_{2kN}	Nm	Permitted nominal breakdown torque at the gear unit output
M_{2k*}	Nm	Actual breakdown torque on the gear unit output
M_{2N}	Nm	Nominal torque on the gear unit output (relative to n_{1N})
M_{2N*}	Nm	Actual nominal torque at the gear unit output (relative to n_{1N})
M_{k*}	Nm	Actual breakdown torque on the output
M_{k100}	Nm	Permitted breakdown torque on the output for $n_{m*} \leq 100$ rpm
M_k	Nm	Permitted breakdown torque on the output
$M_{N,B}$	Nm	Nominal braking torque
n_{1N}	rpm	Nominal speed at the gear unit input
n_2	rpm	Speed at the gear unit output
n_{2*}	rpm	Actual speed at the gear unit output
n_{2m*}	rpm	Actual average output speed
n_F	rpm	Nominal speed of the forced ventilation unit
n_{m*}	rpm	Actual average motor speed
n_N	rpm	Nominal speed: The speed for which the nominal torque M_N is specified
p	–	Number of pole pairs
P_{B20}	W	Power consumption of the brake at 20 °C
P_{effRB}	W	Effective power at the external braking resistor
P_{maxRB}	W	Maximum power at the external braking resistor
P_N	kW	Nominal power: the power the motor is able to deliver long term in S1 mode at the nominal point (tolerance ±5 %)
P_{N*}	kW	Actual nominal power that the motor can output in S1 operation at the nominal point
$P_{N,PU}$	W	Nominal power of the power unit
P_V	W	Power loss
$P_{V,CU}$	W	Power loss of the control unit
pz	–	Number of poles
q_{vF}	m^3/h	Delivery capacity of the forced ventilation unit in open air
R_{2minRB}	Ω	Minimum resistance of the external braking resistor
R_{intRB}	Ω	Resistance of the internal braking resistor
S	–	Service factor: Quotient of the nominal torque from the gear unit and the motor without consideration for thermal limiting performance. Represents a value for the reserve of the geared motor.
$\vartheta_{amb,max}$	°C	Maximum surrounding temperature
ϑ_{NAT}	°C	Nominal response temperature
T	min	Cycle time
$t_{11B,AC}$	ms	Response delay: Time from when the current is turned off until the braking torque increases for AC-side switching of the brake rectifier
$t_{11B,AC,DC}$	ms	Response delay: Time from when the current is turned off until the braking torque increases for AC-side and DC-side switching of the brake rectifier
t_{2B}	ms	Disengagement time: time from when the current is turned on until the torque begins to drop
t_{op}	min	Operating time
τ_{th}	°C	Thermal time constant
U_{1CU}	V	Input voltage of the control unit
U_{1PU}	V	Input voltage of the power unit
U_{1rf}	V	Input voltage of the rectifier
U_{2PU}	V	Output voltage of the power unit
U_{2rf}	V	Output voltage of the rectifier
U_{max}	V	Maximum voltage
U_{MOT}	V	Motor voltage
U_N	V	Nominal voltage of the motor
$U_{N,B}$	V	Nominal voltage of brake
$U_{N,F}$	V	Nominal voltage of the forced ventilation unit
U_{offCH}	V	Switch-off threshold of the brake chopper
U_{onCH}	V	On limit of the brake chopper
$W_{B,R01}$	10^6 J	Work done by friction until reaching 0.1 mm of wear

Symbol	Unit	Explanation
$W_{B,Radj}$	10^6 J	Work done by friction achievable by the brake until readjustment is necessary
x_2	mm	Distance of the shaft shoulder to the force application point
x_{Bmax}	mm	Maximum permitted air gap at which the braking armature still experiences attraction
$x_{B,N}$	mm	Nominal air gap of brake
Y	–	Star connection
y_2	mm	Distance of the shaft axis to the axial force application point
y_{Blim}	mm	Wear limit of the brake disc
z_2	mm	Distance of the shaft shoulder to the middle of the output bearing
Z_{Bmax}	h^{-1}	Maximum permitted switching frequency of the brake

13.2 Trademarks

The following names used in connection with the device, its optional equipment and its accessories are trademarks or registered trademarks of other companies:

CANopen®, CiA®	CANopen® and CiA® are registered European Union trademarks of CAN in AUTOMATION e.V., Nuremberg, Germany.
CODESYS®	CODESYS® is a registered trademark of 3S-Smart Software Solutions GmbH, Kempten, Germany.
DESINA®	DESINA® is a registered trademark of VDW Verein Deutscher Werkzeugmaschinenfabriken e. V., Frankfurt, Germany.
EnDat®	EnDat® and the EnDat® logo are registered trademarks of Dr. Johannes Heidenhain GmbH, Traunreut, Germany.
EtherCAT®, Safety over EtherCAT®, TwinCAT®	EtherCAT®, Safety over EtherCAT® and TwinCAT® are registered trademarks of patented technologies licensed by Beckhoff Automation GmbH, Verl, Germany.
HIPERFACE®	HIPERFACE® and the HIPERFACE DSL® logo are registered trademarks of SICK STEGMANN GmbH, Donaueschingen, Germany.
PLCopen®	PLCopen® is a registered trademark of the PLCopen Organisation, Gorinchem, Netherlands.
PROFIBUS®, PROFINET®	The PROFIBUS and the PROFINET logo are registered trademarks of PROFIBUS Nutzerorganisation e.V., Karlsruhe, Germany.

13.3 Sales terms and delivery conditions

You can find our current sales terms and delivery conditions at http://www.stoeber.de/en/gtc.

13.4 Publication details

Catalog Asynchronous geared motors, ID 443136_de.

You can find current versions of PDF files online at http://www.stoeber.de/en/downloads/.

STÖBER Antriebstechnik GmbH + Co. KG
Kieselbronner Strasse 12
75177 Pforzheim
Germany
Phone: +49 7231 582-0
mail@stoeber.de
www.stober.com

Service hotline:
+49 7231 582-3000

ID 443136_en.01 07/2019

We reserve the right to make technical changes.

STÖBER